UNITED STATES PATENT AND TRADEMARK OFFICE

BEFORE THE PATENT TRIAL AND APPEAL BOARD

SAMSUNG ELECTRONICS CO., LTD.
Petitioner

v.

MOJO MOBILITY INC.
Patent Owner

Case No. IPR2023-01094
Patent No. 11,316,371

PATENT OWNER'S PRELIMINARY RESPONSE

Mail Stop "PATENT BOARD"
Patent Trial and Appeal Board
U.S. Patent and Trademark Office
P.O. Box 1450
Alexandria, VA 22313-1450

TABLE OF CONTENTS

I. INTRODUCTION 1
II. BACKGROUND 6
A. The '371 Patent 6
B. Claim Construction 11
C. Person Of Skill In The Art 11
III. ARGUMENT 12
A. The Petition Should Be Denied Under *Fintiv* As The Issues Presented By This Petition And Petitioner's Seventeen Other Petitions Will Be Resolved First In The Underlying District Court Case And Institution Of This Petition And The Other Seventeen Petitions Would Greatly Multiply The Proceedings, Rather Than Simplify Matters 12
B. The Petition Fails To Establish Obviousness To Combine Or Modify The Five To Eight Asserted References Per Ground To Arrive At The Claimed Subject Matter 22
C. The Petition Is Deficient As To Several Claim Limitations Common To All Challenged Claims And All The Grounds 27
1. The Petition Fails To Establish Obviousness Of The Claimed Invention Including Closed-Loop Feedback Regulation (Limitation [1(L)]) 28
2. The Petition Fails To Establish Obviousness Of The Claimed Invention Including A Planar Coil (Limitation [1(C)]) 33
a. The Petition ignores that Okada's power transfer system is premised on multi-tapped solenoid coils, not planar coils 34
b. The Petition does not identify any multi-tap planar coil shown by any reference—yet such a coil would be required to replace Okada's solenoid coils with planar coils, as Okada's system relies on multi-tapped coils 39
c. The Petition ignores that use of only part of a planar coil would substantially impact the transmission

coupling / efficiency between the primary-side coil and secondary-side coil, and hence would require an unknown alignment determination process 41

3. The Petition Fails To Establish Obviousness Of The Claimed Invention Including A Drive Circuit And Primary Coil For Powering The Receiver Circuit, Battery Charging, And Receiving Communication 45

4. The Petition Fails To Establish Obviousness Of The Claimed Invention Including The Specified Operating Frequency Characteristics (Limitation [1(D)(1)-(3)]).....49

IV. CONCLUSION.....54

TABLE OF AUTHORITIES

Page(s)

CASES

Apple v. Fintiv,
IPR2020-00019, Paper 11 (PTAB March 20, 2020) 14, 18, 20, 22

E-One, Inc. v. Oshkosh Corp.,
IPR2019-00161, Paper 16 (PTAB May 15, 2019) 18

General Plastic Industrial Co., Ltd. v. Canon Kabushiki Kaisha,
IPR2016-01357, Paper 19 (PTAB Sept. 6, 2017).....15

In re Magnum Oil Tools Int'l, Ltd.,
829 F.3d 1364 (Fed. Cir. 2016) 23, 34

In re NuVasive, Inc.,
842 F.3d 1376 (Fed. Cir. 2016) 23

KEYnetik, Inc. v. Samsung Electronics Co., Ltd.,
841 Fed. Appx. 219 (Fed. Cir. 2021).....23

Maxlite, Inc. v. Jiaxing Super Lighting Electric Appliance Co., Ltd.,
IPR2020-00208, Paper 32 (PTAB Oct. 12, 2021).....18

MyPort, Inc. v. Samsung Elecs. Co., Ltd.,
Case No. 2:22-CV-00114-JRG, Dkt. 73 (E.D. Tex. June 13, 2023).....16

Next Caller, Inc. v. TrustID, Inc.,
IPR2019-00961, Paper 10 (PTAB Oct. 16, 2019).....18

Oyster Optics, LLC, v. Infierna Corp.,
Case No. 2:19-CV-00257-JRG, Dkt. 87 (E.D. Tex. July 17, 2020).....16

Plas-Pak Indus., Inc. v. Sulzer Mixpac AG,
No. 13-7786, 2014 WL 203101 (PTAB. Jan. 17, 2014) aff'd 600 Fed.
App's 755 (Fed. Cir. 2015) 33, 34

Regents of University of California v. Broad Institute, Inc.,
903 F.3d 1286 (Fed. Cir. 2018) 23

Sand Revolution II, LLC v. Continental Intermodal Group – Trucking LLC, IPR2019-01393, Paper 24 (PTAB June 16, 2020) 15

SAS Institute Inc. v. Iancu, 138 S. Ct. 1348 (2018).....27

Satco Products, Inc. v. The Regents of the University of California, IPR2021-00794, Paper 14 (PTAB Nov. 10, 2021).....18

Solas OLED Ltd. v. Samsung Display Co., Ltd., Case No. 2:19-CV-00152-JRG, Dkt. 133 (E.D. Tex. July 17, 2020).....16

Sotera Wireless, Inc. v. Masimo Corp., IPR2020-01019, Paper 12 (PTAB Dec. 1, 2020) 20

Stanley Black & Decker, Inc., et al. v. Zircon Corp., IPR2020-01572, Paper 10 (PTAB April 19, 2021) 18

Vector Flow, Inc. v. HID Glob. Corp., IPR2023-00353, Paper 8 (PTAB July 27, 2023) 22

Verizon Business Network Services, Inc. v. Huawei Techs. Co., IPR2020-01141, Paper 12 (PTAB Jan. 14, 2021) 19

STATUTES

35 U.S.C. §§ 102 and 103 .....14, 15

35 U.S.C. § 312(a)(3).....27

35 U.S.C. § 313 1

35 U.S.C. § 314(a) 1, 13

35 U.S.C. § 315 (e) (2).....21

OTHER AUTHORITIES

37 C.F.R. § 42.107 1

77 Fed. Reg. 48,756, 48,763 (Aug. 14, 2012) 27

TABLE OF EXHIBITS

Exhibit	Description
2001	Samsung's District Court Invalidity Contentions
2002	*Mojo Mobility Inc. v. Samsung Electronics Co., Ltd, et al.*, Case No. 2-22-cv-00398, Dkt. 41 (Mojo's Response to Samsung's District Court Motion to Stay Pending IPR) (E.D. Tex. Aug. 11, 2023).
2003	*Mojo Mobility Inc. v. Samsung Electronics Co., Ltd, et al.*, Case No. 2-22-cv-00398, Dkt. 1 (Complaint) (E.D. Tex. Oct. 7, 2022).

Mojo Mobility Inc. ("Patent Owner" or "Mojo") submits this preliminary response in accordance with 35 U.S.C. § 313 and 37 C.F.R. § 42.107, responding to the Petition for *Inter Partes* Review ("Petition") of claims 1, 2, 3, 4, 8, 11 and 12 of U.S. Patent No. 11,316,371 (the "'371 Patent") filed by Samsung Electronics Co., Ltd. ("Petitioner" or "Samsung").

I. INTRODUCTION

The Board should deny institution in its discretion under 35 U.S.C. § 314(a) for at least any one of the following reasons:

Procedurally, the petition should be denied on *Fintiv* grounds in light of the underlying district court litigation. Petitioner has filed *eighteen* IPR petitions challenging the validity of the seven patents at issue in the underlying district court case.[1] The eighteen IPR petitions contain in total 72 grounds and 34 prior art references. *Id.* Petitioner has asserted all these invalidity grounds (and more) in the district court case. By way of this and its seventeen other petitions, Petitioner is

[1] *See, e.g.*, (1) IPR2023-01086, (2) IPR2023-01087, (3) IPR2023-01088, (4) IPR2023-01089, (5) IPR2023-01090, (6) IPR2023-01091, (7) IPR2023-01092, (8) IPR2023-01093, (9) IPR2023-01101, (10) IPR2023-01102, (11) IPR2023-01098, (12) IPR2023-01099, (13) IPR2023-01100, (14) IPR2023-01124, (15) IPR2023-01094 (this IPR), (16) IPR2023-01095, (17) IPR2023-01096, (18) IPR2023-01097.

seeking to convert what is a single proceeding—the district court case—into *eighteen* PTAB proceedings. Moreover, the district court case (which most likely will not be stayed) will hold trial five months before any Final Written Decision would be issued on the petitions and six months before Final Written Decision will be issued on this Petition. Accordingly, institution of this Petition and the seventeen other Petitions goes against the very principles and premise of the America Invents Act, as it would multiply and complicate the proceedings, rather than simplify matters.

Substantively, the Petition fails to establish the obviousness of combining or modifying the *several* asserted references per Ground—*five to eight references per Ground*—to somehow arrive at the claimed subject matter. The Petition fails to show how *specifically* the several asserted references would be combined or modified to arrive at the claimed subject matter. Nor does the Petition show that it would have been obvious to a POSITA to do so, or that a POSITA would have had a reasonable expectation of success. Instead, in several instances on each Ground, the Petition makes conclusory assertions with merely lengthy string cites that make the Petition impossible to follow.

Moreover, the Petition fails to establish the presence of multiple claim limitations applicable to each of the Grounds in the Petition. *First*, the Petition fails to establish obviousness of the claimed closed-loop feedback regulation of the

receiver voltage/current level by the transmitter during charging (herein "base unit" or "charger" are at times used interchangeably with "transmitter," i.e., the transmitter-side of inductive power transfer). That is, the Petition fails to establish obviousness of the closed-loop feedback regulation specified in the claims. To try to establish this claimed subject matter, the Petition points to Okada as the base reference and then suggests modifying Okada somehow by way of Kook to add closed-loop feedback regulation. However, Okada is fundamentally an open-loop system during charging, setting the transmitter power level once before the start of charging (setting the power level to low, intermediate, or high), and then relying on the receiver to self-regulate its charging power, rather than using closed-loop feedback regulation by the transmitter during charging. That is, the claimed closed-loop feedback regulation is the antithesis of the open-loop Okada system. The Petition fails to explain why a POSITA would have been motivated to try to modify Okada to add closed-loop feedback regulation. Nor does the Petition explain how this would be done while keeping the Okada system intact. Thus, the Petition is deficient on the claimed closed-loop feedback regulation.

Second, the Petition fails to demonstrate how the proposed Okada/Odendaal combination would provide the claimed "planar coil" in the context of the claimed invention. Okada does not disclose planar coils. Rather, Okada uses solenoid coils with the transmitter solenoid coil having multiple taps for power transfer and

communication. In particular, in addition to connections to the two ends of the solenoid coil, the Okada transmitter solenoid coil has three taps along its length to provide four different coil sections, three selectively used for "high, intermediate, and low" power levels and the fourth, smallest section separately used for communication. Given Okada's use of solenoid coils, the Petition points to Odendaal to try to modify Okada to have the claimed planar coils. However, the Petition fails to show how a POSITA would use Odendaal to implement the Okada system with planar coils. Indeed, the Petition fails to make any showing of how a POSITA would or could do this to provide the four needed coil lengths for Okada's separate "high, intermediate, and low" power levels and communication channel. The Petition fails to make any showing that a POSITA would have been motivated to attempt this or would have had a reasonable expectation of success. To the contrary, there are a host of reasons as discussed below that point against this. Thus, the Petition is also insufficient on the "planar coil" claim limitation.

Third, the Petition fails to demonstrate obviousness of the "primary coil," the "drive circuit," or the "sense circuit" as claimed. The claims specify that the primary coil and drive circuit are configured to deliver power to the portable device (the receiver-side of inductive power system, which includes what the claims specify as a "receiver unit" for receiving inductive power and charging the battery of the portable device) to enable communication from the portable device (via the receiver

unit included therein) and to charge the battery of the portable device (herein for simplicity in this Preliminary Response, "receiver" is at times used interchangeably with the "portable device," i.e., the receiver-side of the inductive power transfer). The claims further specify that the sense circuit detects through the primary coil the communication from the portable device. The Petition points to Okada for these claimed elements, but the Petition fails to show that Okada discloses or teaches the use of a common primary coil and drive circuit for charging the battery of the portable device and enabling communication from the portable device detected by a sense circuit over the same primary coil. Rather, Okada shows and teaches different coils and circuits for charging the portable device and for communication—one set for charging the portable device and another different set for enabling communication from the portable device.

Fourth, the claims require a drive circuit that operates within a frequency range near a resonance frequency of a circuit including the claimed primary coil and capacitor, wherein increasing the drive frequency decreases the current/voltage output of the receiver circuit. The Petition admits that Okada fails to show this but argues that it would have been obvious to modify Okada to have this in view of Kook. However, the Petition fails to establish that a POSITA would have been motivated to try this and had an expectation of success in doing so, whereas the indications are to the contrary. Moreover, even if a POSITA were somehow to

attempt this, the claimed invention would not be achieved because Kook fails to teach how to provide the claimed frequency response characteristics. Namely, Kook fails to teach how to make or structure a drive circuit such that increasing frequencies result in a lower voltage/current induced at the receiver circuit. Kook does not even suggest that it would be desirable to have the claimed operating frequency characteristics.

For any one of these reasons, the Petition should be denied.

II. BACKGROUND

A. The ’371 Patent

Each of the Grounds is directed to claim 1 or a claim dependent on claim 1. Claim 1 specifies a system for inductive power transfer to a portable device, *i.e.*, claim 1 specifies a wireless transmitter (the inductive charger) for use with a portable device (including the inductive receiver). Ex. 1001 at claim 1.

Among other things, as relevant to this Preliminary Response, claim 1 specifies that the transmitter is configured to perform closed-loop feedback regulation of the voltage or current induced at the output of the receiver circuit during charging. *Id*. To do so, the transmitter is configured to receive, as feedback from the receiver, information about the voltage or current at the output of the receiver rectifier circuit. With this feedback information from the receiver, the transmitter is configured to adjust its drive circuit to maintain the desired

voltage/current at the receiver during charging. *Id*.

Additionally, claim 1 specifies a primary-side coil that is planar and parallel to the charging surface and generates an electromagnetic field perpendicular to the charging surface. *Id*.

Claim 1 specifies a primary coil and drive circuit to activate and power the receiver unit to enable communication from the receiver unit of the portable device and to charge the battery of the portable device. The claim also specifies that a sense circuit detects via the primary coil the communication from the portable device. *Id*.

Claim 1 also specifies that the drive circuit includes a capacitor and is configured to be operated within a frequency range near resonance of a circuit including the primary coil and the capacitor such that increasing the drive circuit frequency reduces the induced voltage / current at the inductive receiver. *Id*.

These summarized features of claim 1 addressed in this Preliminary Response are seen in the below emphasized text in claim 1. Claim 1 specifies many more features, as seen in the claim, which would need to be addressed if there were institution.

Limitation	Claim Language
1(a)	An apparatus comprising:
1(b)	a system for providing power inductively to a portable device

Limitation	Claim Language
	comprising a battery and an inductive receiver unit including a receiver coil and a receiver circuit, the system comprising:
1(c)	***a first primary coil that is substantially planar and substantially parallel to a surface*** of the system for providing power inductively to the portable device;
1(d)(1)	***a first drive circuit***, including a ***FET driver, a capacitor, and a FET switch, coupled to a DC voltage input and coupled to the first primary coil***,
1(d)(2)	wherein during operation the first drive circuit is ***configured to apply an alternating electrical current to the first primary coil at an operating frequency*** and duty cycle to generate an alternating magnetic field in a direction substantially perpendicular to the plane of the first primary coil and the surface of the ***system to provide power inductively to the portable device***,
1(d)(3)	wherein the ***operating frequency is within a range of frequencies (i) that are near a resonance frequency of a circuit comprising the first primary coil and the capacitor, (ii) such that increasing values of the operating frequency within the range of frequencies would***

Limitation	Claim Language
	correspond to a lower voltage or current induced in an output of the receiver circuit and (iii) that allow ***activation and powering of the receiver unit and charging the battery of the portable device***;
1(e)	***a first sense circuit to monitor current flow through the first primary coil*** during operation of the first drive circuit, ***wherein the first sense circuit*** includes a low pass filter and an amplifier to assist in ***detecting*** and amplifying a signal corresponding to ***a current modulation in the first primary coil induced by modulation of current in the receiver coil***; and
1(f)	a communication and control circuit, including a microcontroller coupled to ***the first drive circuit*** and the first sense circuit, configured to:
1(g)	detect, through the first sense circuit, a received communication of information in the current modulation in the first primary coil;
1(h)	***operate the first drive circuit to inductively transfer power from the first primary coil to the receiver coil to activate and power the receiver unit to enable the receiver circuit to communicate the information detected in the current modulation in the first primary***

Limitation	Claim Language
	coil, wherein the communication of information includes information to enable the communication and control circuit to configure the inductive transfer of power to the portable device,
1(i)	wherein the received communication of information includes: information corresponding to a voltage or current induced by the first primary coil at the output of the receiver circuit; a unique identification code; a manufacturer code; a charge algorithm profile; and a power requirement; and
1(j)	***operate the first drive circuit*** according to the power requirement and charge algorithm profile to provide the power from the first primary coil to the receiver coil ***to power the receiver unit and charge the battery of the portable device***,
1(k)	wherein to charge the battery of the portable device the communication and control circuit is further configured to: ***receive additional information in the current modulation in the first primary coil from the modulation of the current in the receiver coil corresponding to the voltage or current at the output of the receiver circuit while charging the battery of the portable device;***

Limitation	Claim Language
1(l)	***regulate in a closed loop feedback manner the voltage or current at the output of the receiver circuit in accordance with the received additional information corresponding to the voltage or current at the output of the receiver circuit by adjusting at least one of the operating frequency and the duty cycle of the first drive circuit*** while charging the battery of the portable device;
1(m)	monitor for continued presence of the portable device and completion of the charging of the battery of the portable device based on the communication from the receiver circuit and detected by the communication and control circuit through the first sense circuit; and
1(n)	if the portable device is no longer present or charging is complete, stop operation of the first drive circuit for the provision of power inductively to the portable device.

B. Claim Construction

For the sake of this Response only, Patent Owner adopts Petitioner's position that no constructions are required.

C. Person Of Skill In The Art

For the purposes of this Preliminary Response, Patent Owner does not

challenge Petitioner's definition of a POSITA, but Patent Owner reserves the right to argue for a different definition should there be institution.

III. ARGUMENT

A. The Petition Should Be Denied Under *Fintiv* As The Issues Presented By This Petition And Petitioner's Seventeen Other Petitions Will Be Resolved First In The Underlying District Court Case And Institution Of This Petition And The Other Seventeen Petitions Would Greatly Multiply The Proceedings, Rather Than Simplify Matters

Petitioner has taken a single district court litigation and sought to turn it into eighteen proceedings before this Board, which would issue final written decisions months after the scheduled trial in the single district court case. The Board should use its discretion to deny institution of Petitioner's eighteen IPR petitions.

As Director Vidal has pointed out, "Congress designed the America Invents Act (AIA) post-grant proceedings 'to establish a more efficient and streamlined patent system that will improve patent quality and limit unnecessary and counterproductive litigation costs.'" Ex. 1051 at 1 (citing H.R. Rep. No. 112- 98, pt. 1, at 40 (2011), 2011 U.S.C.C.A.N. 67, 69; *see* S. Rep. No. 110- 259, at 20 (2008)). Instituting Petitioner's eighteen IPR petitions is directly contrary to this goal. This is because "[p]arallel district court and AIA proceedings involving the same parties and invalidity challenges ***can increase, rather than limit***, litigation costs." Ex. 1051 at 1 (emphasis added).

Here, instituting the eighteen IPR petitions which will have the same outcome as the ***single*** district court case (upholding the validity or invalidating the patents) will dramatically increase the litigation costs of the parties. Notably, the district court case is considering the exact same references and will also consider more invalidity grounds. The single district court case will cover all the invalidity grounds raised across the ***eighteen*** IPR petitions as well as additional invalidity grounds. It is a fallacy to consider Petitioner's IPR petitions as streamlining the dispute between the parties. The Board should thus use its discretion to deny institution.

Under 35 U.S.C § 314(a), the Board has discretion to deny a petition based on the status of a related litigation. The Board considers six factors to determine whether efficiency, fairness, and the merits support denial:

> Factor 1: whether the court granted a stay or evidence exists that one may be granted if a proceeding is instituted;
>
> Factor 2: proximity of the court's trial date to the Board's projected statutory deadline for a final written decision;
>
> Factor 3: investment in the parallel proceeding by the court and the parties;
>
> Factor 4: overlap between issues raised in the petition and the parallel proceeding;
>
> Factor 5: whether the petitioner and the defendant in the parallel proceeding are the same parties;
>
> Factor 6: other circumstances that impact the Board's exercise of discretion, including the merits.

Apple v. Fintiv, IPR2020-00019, Paper 11 at 5-6 (PTAB March 20, 2020) (precedential). As discussed below, each of the six *Fintiv* factors supports the Board denying institution. The current advanced state of the parallel district court case, as well as the lack of a granted stay, favors denial of the Petition. By the time the Board would issue an institution decision across all eighteen IPR petitions (expected February 2024), claim construction will have been briefed and argued to the district court. Moreover, fact discovery has been underway and is set for completion in March 2024—weeks following the final institution decisions. Opening expert reports will be exchanged in that same month. The district court trial is scheduled for August 2024, more than five months *before* the earliest of the Final Written Decisions for the eighteen IPR petitions would be issued and six months before all Final Written Decisions would be issued. *See* Ex. 1053 (EDTX Scheduling Order). As explained below, the district court is unlikely to stay a trial that is already scheduled to be complete well before a final written decision on any petition would be issued by the Board.

Petitioner's proposed stipulation does not meaningfully streamline the issues. Petitioner merely offers to drop from its invalidity assertions in district court only those grounds that are instituted by the Board. This would mean that *even if all eighteen IPRs were to be instituted*, Petitioner would still assert invalidity grounds based on §§ 102 and 103 in district court that would not and could not be addressed

by the Board. And those invalidity grounds in district court would be tried before a jury months before any final written decision would issue. Not only does Petitioner's proposal not alleviate the duplicative efforts in assessing the invalidity of the patents, it increases the likelihood of inconsistent results across the proceedings. There is no argument that can be offered that supports instituting eighteen IPRs—that would issue narrow invalidity rulings under 35 U.S.C. §§ 102 and 103 months after the district court trial—rather than letting the parties resolve all these issues in a single, quicker district court case that is already scheduled to be complete in less than a year. Accordingly, the Board should deny institution to maintain the goals of efficiency and efficacy. *See General Plastic Industrial Co., Ltd. v. Canon Kabushiki Kaisha*, IPR2016-01357, Paper 19 at 16-17 (PTAB Sept. 6, 2017).

Factor 1: the district court case has not been stayed nor is it likely to be stayed even were this petition instituted. Petitioner states that this factor is neutral. However, Petitioner has failed to consider the totality of the evidence. This Board has previously held that "***[i]n the absence of specific evidence***, we will not attempt to predict how the district court in the related district court litigation will proceed because the court may determine whether or not to stay any individual case." *Sand Revolution II, LLC v. Continental Intermodal Group – Trucking LLC*, IPR2019-01393, Paper 24 at 7 (PTAB June 16, 2020) (informative) (emphasis added). Here, ***all*** the evidence points to a stay not being entered in the district court litigation pre

or post institution.

Petitioner has filed a motion to stay the district court litigation which has not been ruled on, but will almost certainly be denied pre-institution. *See* Ex. 2002 at 1-2 (Patent Owner showing that the Eastern District of Texas ***universally*** denies a motion to stay pre-institution). Moreover, even if instituted, the timing and advanced stage of litigation indicates that Judge Gilstrap is highly likely to deny a motion to stay. *See, e.g.*, *MyPort, Inc. v. Samsung Elecs. Co., Ltd.*, Case No. 2:22-CV-00114-JRG, Dkt. 73 at 4-5 (E.D. Tex. June 13, 2023) (denying a motion to stay when trial was scheduled and "the PTAB [final written] decision is not due until over two months after jury trial is set to begin."); *Solas OLED Ltd. v. Samsung Display Co., Ltd.*, Case No. 2:19-CV-00152-JRG, Dkt. 133 at 3-4 (E.D. Tex. July 17, 2020) (denying a motion to stay despite the Board's institution on the patents-in-suit largely because "discovery is complete[] and trial is only a few months away" when PTAB final written decisions would have been issued months after the scheduled trial); *Oyster Optics, LLC, v. Infierna Corp.*, Case No. 2:19-CV-00257-JRG, Dkt. 87 at 4-5 (E.D. Tex. July 17, 2020) (denying a motion to stay although the asserted claims were instituted because claim construction briefing was finished and "[f]act discovery is closing in about a month and trial is only six months away.").

Here, the timing demonstrates that Judge Gilstrap is likely to deny a motion to stay. As shown in the case timeline below, the decision on institution across the

eighteen IPRs is not expected until January and February 2024. By that time, the parties will have had the *Markman* hearing and substantial document production will have occurred. Ex. 1053 at 3. Fact discovery is set to be completed only a month later only March 18, 2024. *Id*. Notably, the scheduled trial date (August 5, 2024) is set only six months after the institution decision of the IPRs. *Id*. at 1. Finally, a Final Written Decision (if any) across the eighteen IPRs would be handed down roughly five to six months after the trial in the district court case—one single proceeding that will address all the issues in the eighteen IPRs. Thus, Factor 1 heavily favors denial.

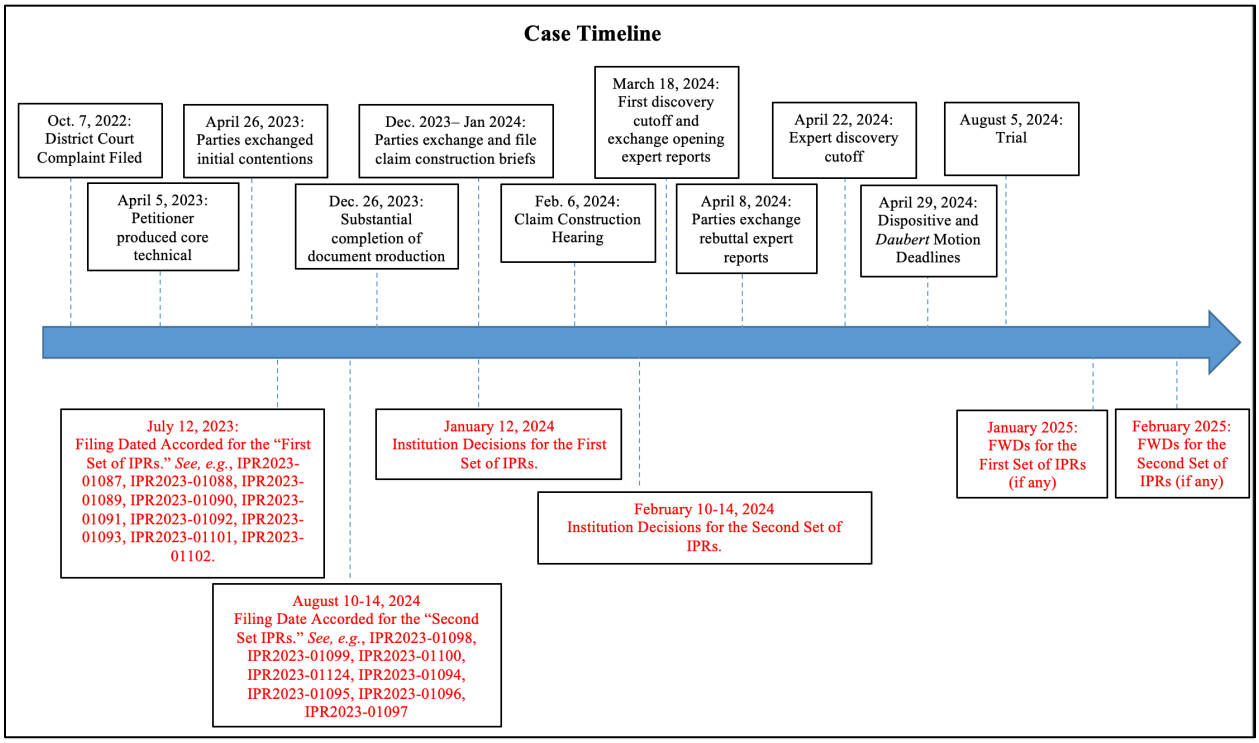

Factor 2: the single district court case will resolve all of the issues presented in the eighteen petitions (and more) months before any final written decision. The Board generally denies institution when the trial date is months before the projected

statutory deadline of the PTAB's final written decision (FWD). Fintiv, IPR2020-00019, Paper 11 at 9) ("If the court's trial date is earlier than the projected statutory deadline, the Board generally has weighed this fact in favor of exercising authority to deny institution."). Trial is set for August 5, 2024, which would be five to six months before the earliest expected date of a FWD (January and February 2025). This factor weighs heavily in favor of denial. The Board regularly finds a period of time less than seven months between the expected date of the FWD and trial supports denial. *See, e.g., id*. (5-6 months based on the time-to-trial evidence); *Satco Products, Inc. v. The Regents of the University of California*, IPR2021-00794, Paper 14 at 19 (PTAB Nov. 10, 2021) (five months); *Maxlite, Inc. v. Jiaxing Super Lighting Electric Appliance Co., Ltd.*, IPR2020-00208, Paper 32 at 5 (PTAB Oct. 12, 2021) (four months); *Stanley Black & Decker, Inc., et al. v. Zircon Corp.*, IPR2020-01572, Paper 10 at 12 (PTAB April 19, 2021) (three months); *Next Caller, Inc. v. TrustID, Inc.*, IPR2019-00961, Paper 10 at 14-15 (PTAB Oct. 16, 2019) (three months); *E-One, Inc. v. Oshkosh Corp.*, IPR2019-00161, Paper 16 at 6 (PTAB May 15, 2019) (one month).

Factor 3: there has and continues to be significant investment by the parties in the district court litigation. The Board has used its discretion to deny institution when, as here, there is significant investment in the parallel district court proceeding. As shown in the case timeline below, the district court proceeding has been pending

since October of 2022. The Parties have prepared and exchanged infringement and invalidity contentions, presented initial disclosures, and are in the midst of substantial fact discovery. In fact, by the time the Board would even issue an institution decision, claim construction will have been briefed and argued.

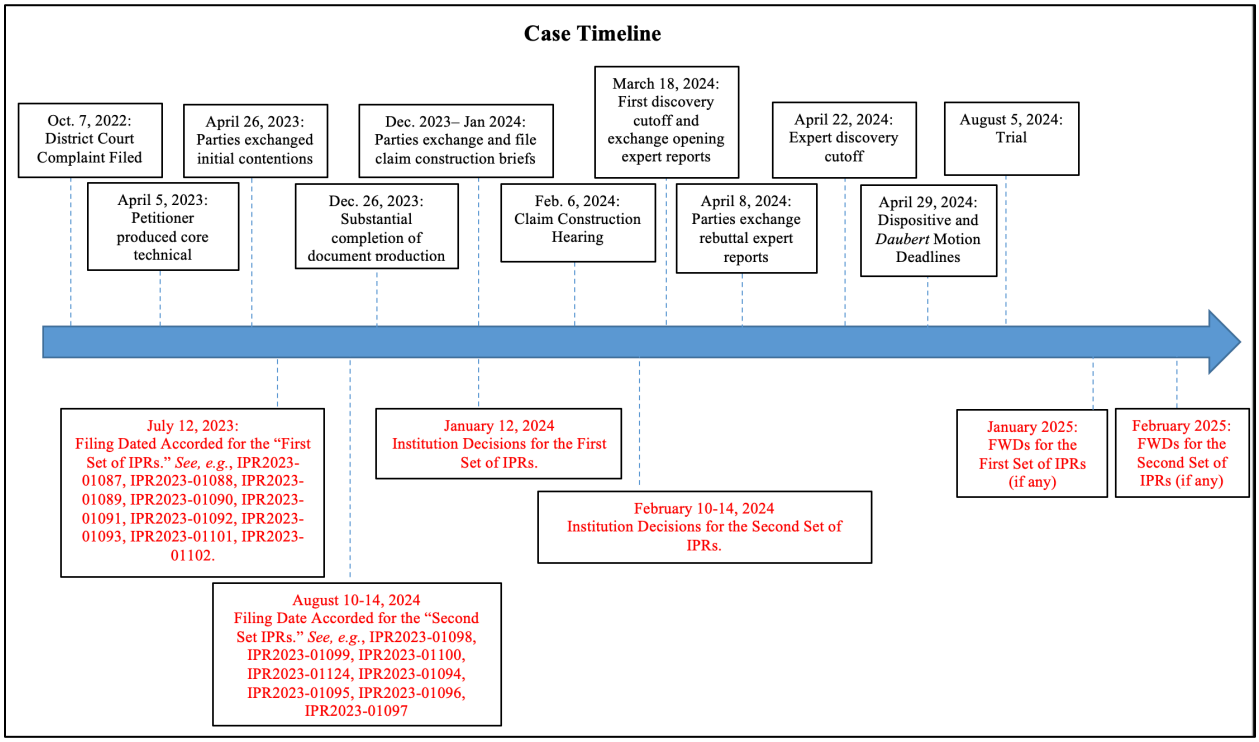

Additionally, Petitioner did not file its Petitions expeditiously. Petitioner waited many months after the district court complaint was filed to submit its Petitions. *Compare Verizon Business Network Services, Inc. v. Huawei Techs. Co.*, IPR2020-01141, Paper 12 at 12 (PTAB Jan. 14, 2021) ("We credit Petitioner's diligence in filing the Petition in this case within a short time (less than three months) after being served infringement contentions in the parallel case."), *with* Ex. 2003 (the district court complaint was filed in October and Petitioner filed its first petition

almost nine months later in June). Accordingly, the parties have expended a significant amount of time and resources related to the district court proceeding, which greatly weighs in favor of denying institution.

Factor 4: there is significant overlap between issues raised in the petition and in the parallel proceeding. "[I]f the petition includes the same or substantially the same claims, grounds, arguments, and evidence as presented in the parallel proceeding, th[at] fact has favored denial." *Fintiv*, IPR2020-00019, Paper 11 at 12. Petitioner challenges the same claims in its petition—and across the 18 Petitions—that it does in its invalidity contentions at the district court. *See* Ex. 2001. In fact, Petitioner relies on the same principal references in the Petition as it does in the parallel litigation. *See generally* Ex. 2001 at 13-18. Thus, the Petition includes substantial overlap with the claims and evidence asserted in the parallel litigation.

In addition, Petitioner's narrow stipulation will not mitigate the overlap between the district court and the Board. Petitioner could have included a broader stipulation that might better address the duplicative efforts, and adhere to the purpose of *inter partes* review as an alternative to district court litigation. *Compare Sand Revolution II*, Paper 24 at 12 n.5 ("Petitioner stipulates only that it will not pursue, in district court, the 'same grounds' presented in the Petition . . . Petitioner could have stipulated that it would not pursue any ground raised or that *could have been reasonably raised in an IPR*.") (emphasis added), *with Sotera Wireless, Inc. v.*

Masimo Corp., IPR2020-01019, Paper 12 at 19 (PTAB Dec. 1, 2020) (precedential) ("Importantly, Petitioner broadly stipulates to not pursue 'any ground raised or that could have been reasonably raised.'").

Here, Petitioner's stipulation "that, if the IPR is instituted, Petitioner will not pursue the IPR grounds in the district court litigation" falls short of a *Sotera* stipulation. In fact, Petitioner's stipulation is superficial as it does not even meet the IPR estoppel that would arise after an IPR is instituted and a final written decision is issued. *See* 35 U.S.C. § 315 (e) (2) ("The petitioner in an *inter partes* review of a claim in a patent under this chapter that results in a final written decision under section . . . may not assert either in a civil action . . . that the claim is invalid on any ground that the petitioner raised ***or reasonably could have raised*** during that *inter partes* review.") (emphasis added).

Petitioner's weak stipulation actually allows it to circumvent estoppel and get two bites at the invalidity apple. It would permit Petitioner to maintain in district court those invalidity arguments that are not presented in the eighteen IPR petitions. Those invalidity arguments would then be raised during trial in August 2024. If Petitioner were to fail at trial, it would still have, as backup, the Final Written Decision to be issued by the Board, in early 2025. Petitioner's stipulation is antithetical to a *Sotera* stipulation. Thus, this factor weighs in favor of denying the Petition.

Factor 5: the petitioner and the defendant in the parallel proceeding are the same party. Factor 5 weighs in favor of denial because both Parties to this proceeding are the same parties in the related district court litigation. *Fintiv*, IPR2020-00019, Paper 11 at 15 ("Because the petitioner and the defendant in the parallel proceeding are the same party, this factor weighs in favor of discretionary denial."). Petitioner does not contest this.

Factor 6: the merits of the Petition are weak. The final factor weighs in favor of denial because there is no "compelling challenge" of invalidity on the merits of the Petition. Interim Procedure, 4 ("compelling, meritorious challenges will be allowed to proceed at the PTAB even where district court litigation is proceeding in parallel"). As shown in the following sections, Petitioner's arguments on the merits do not meet the high standard required of an invalidity challenge. *Id.* ("Compelling, meritorious challenges are those in which the evidence, if unrebutted in trial, would plainly lead to a conclusion that one or more claims are unpatentable by a preponderance of the evidence."); *see also Vector Flow, Inc. v. HID Glob. Corp.*, IPR2023-00353, Paper 8 at 23-24 (PTAB July 27, 2023) (same).

B. The Petition Fails To Establish Obviousness To Combine Or Modify The Five To Eight Asserted References Per Ground To Arrive At The Claimed Subject Matter

"To satisfy its burden of proving obviousness, a petitioner cannot employ

merely conclusory statements. The petitioner must instead articulate specific reasoning, based on evidence of record, to support the legal conclusion of obviousness." *In re Magnum Oil Tools Int'l, Ltd.*, 829 F.3d 1364, 1380–81 (Fed. Cir. 2016). The "factual inquiry" into the reasons for "combin[ing] references must be thorough and searching, and the need for specificity pervades." *In re NuVasive, Inc.*, 842 F.3d 1376, 1381–82 (Fed. Cir. 2016) (internal quotations and citations omitted). "An obviousness determination requires finding that a person of ordinary skill in the art would have been motivated to combine or modify the teachings in the prior art and would have had a reasonable expectation of success in doing so." *Regents of University of California v. Broad Institute, Inc.*, 903 F.3d 1286, 1291 (Fed. Cir. 2018). Thus, the Petition must show that a POSITA would have been motivated to combine the asserted references and "demonstrate that the skilled artisan would have had a reasonable expectation of success." *KEYnetik, Inc. v. Samsung Electronics Co., Ltd.*, 841 Fed. Appx. 219, 227-228 (Fed. Cir. 2021) (internal citations omitted). As illustrated below, the Petition here has not made these required showings.

The Petition fails to show that a POSITA would have been motivated to combine and modify the many asserted prior art references to arrive at the claimed subject matter. Any discussion on using combinations is limited to discrete claim elements, and not a motivation regarding the references themselves. Moreover, the Petition fails to show that a POSITA would have had a reasonable expectation of

success in making the alleged combinations and changes. To the contrary, for example, in several instances the Petition fails to consider multiple reasons teaching away from the alleged combinations and changes, making it nonobvious to combine or modify, and going against a reasonable expectation of success, as illustrated below in Section III-C.

Additionally, the Petition fails to provide the required particularity for making the alleged combinations and modifications. Instead, in many instances the Petition merely presents conclusory assertions with lengthy string cites. For example:

- Pet. at 15-16: "Planar coils positioned parallel to a power transfer system's surface were known. (Ex.1002, ¶¶133-137; Ex.1027, 1-3; Ex.1015, FIGS. 1-2, 3-4, 7-12, Abstract, 1:5-2:29, 2:64-3:27, 3:39-51, 5:5-47, 5:48-9:5; Ex.1047, FIGS. 1-3, 6, 8A-9, ¶¶0002, 0006-0007, 0018-0034; Ex.1025, FIGS. 1, 3, 8-9, 13, 1:10-3:2, 4:19-32, 7:25-9:28, 12:27-32, 14:4-17; Ex.1026, FIGS. 1-2, 5, 9A-9C, Abstract, 1:3-9:4, 11:4-15; Ex.1009, Abstract, FIGS. 1-3, 1:4-2:26, 2:47-3:39, 4:18-60; Ex.1024, FIGS. 3, 8-9, 1:12-15, 1:39-2:29, 9:41-53, 10:45-57, 11:60-13:4; Ex.1028, Abstract, FIGS. 2-7, ¶¶0001, 0004-0007, 0025-0032, 0041; Ex.1029, 1-4, 9-19; Ex.1030, FIGS. 3-7B, 1:5-9, 1:59-61, 3:19-56, 4:62-67, 5:25-44; Ex.1036, Abstract,

2:22-3:6("primary winding…substantially parallel to…charging surface"), 5:22, 11:18, 23:20-24:8, 24:19-22.)"

- Pet. at 23-24: "Indeed, capacitor-based circuits (as in Kook) was known to improve signal transmissions (e.g., minimizing/reducing unwanted radiations and heat issues caused by harmonics, etc.) (Ex.1002, ¶¶57-65, 154-155; Ex.1016, 631, 641, 798, ("blocks out…harmonics"); Ex.1013, (capacitor/switches reducing harmonics from primary coil), FIGS. 3 (annotated below), 6, 3:29-4:5, 4:19-5:7, 7:24-8:14, 8:17-23, 24-31, 9:26-12:27); Ex.1008, 2:16-19; Ex.1001, 22:13-30 (harmonics are "undesirable").) [FIGURE OMITTED] (*See also* Ex.1012, FIGS. 2, 5, 8, 3:30-62, 8:47-9:51; Ex.1014, 62-68; Ex.1015, FIGS. 1-2, 5-12, Abstract, 1:55-2:10, 3:28-51, 4:22-44, 5:45-6:4; Ex.1020, Abstract; Ex.1021, ¶¶00164-0165; Ex.1029, 22-25; Ex.1002, ¶¶155-156.)"
- Pet. at 29-30: "A POSITA would have also understood that the ac signal applied to the modified Okada system's planar primary coil(s) would have generated a "substantially perpendicular" "alternating magnetic field", as a natural result of activating the planar coil to inductively transfer power to PDA3 as described by Okada-Odendaal-Kook. (Ex.1002, ¶¶35-53, 167-168; Ex.1005, ¶¶0035,

0051, 0056, 0063-0066, 0121-0132, FIGS. 11(b)/13(b); Ex.1059, ¶¶0032-0042; §IX.A.1(c); Ex.1011, 557-562, 593-594, 601; Ex.1009, 2:62-3:8, 1:54-2:18, 3:20-:11, FIGS. 1-3; Ex.1010, FIGS. 1-10, 7:21-10:22, 11:27-14:67; Ex.1029, 3-4, 27-50); Ex.1019, FIG. 2B, ¶¶0027, 0064.)"

- Pet. 30: "A POSITA would thus have understood the planar primary coils in the Okada-Odendaal-Kook system, when inductively providing power via planar coils 19/41 (§IX.A.1(c)), would have likewise generated a magnetic field substantially perpendicular to the plane of coil 19 and the system's surface. (Ex.1002, ¶¶35-53, 168-170; Ex.1011, 558, 559 ("magnetic field…perpendicular to the plane of [wire] loop"), 562-564, 592; Ex.1048, Abstract, FIGS. 1-6, 1:28-2:4, 2:27-3:14, 4:11-24, 5:23-6:15, claims 1-88; Ex.1049, Abstract, FIGS. 1, 5-6, 9, 11-12, 24-26, ¶¶0008-0010, 0044-0051, 0065-0066; Ex.1050, Abstract, FIGS. 1-5, 9A-9C, 5:22-6:45, 11:22-33, 12:28-38, 16:25-18:3.)"

And these are but a handful of the voluminous string citations, citations to other parts of the Petition, or citations to one of the nearly 80 pieces of evidence submitted with the Petition.

The PTAB's Trial Practice Guide advises petitioners to "avoid submitting a

repository of all the information that a judge could possibly consider, and instead focus on concise, well-organized, easy-to-follow arguments supported by readily identifiable evidence of record." 77 Fed. Reg. 48,756, 48,763 (Aug. 14, 2012). As illustrated above, the Petition is a "repository of all information" with voluminous string cites that require both the Board and Patent Owner to sort through the nearly *eighty* pieces of evidence filed with the Petition. The Board should accordingly exercise its discretion to deny the Petition. *See* 35 U.S.C. § 312(a)(3) (requiring that an IPR petition to identify "with particularity, each claim challenged, the grounds on which the challenge to each claim is based, and the evidence that supports the grounds for the challenge to each claim.").[2]

C. The Petition Is Deficient As To Several Claim Limitations Common To All Challenged Claims And All The Grounds

As explained below, the Petition fails to show sufficiently for institution obviousness of several limitations found in each of the Challenged Claims and each of the Grounds. Each of the Grounds presents the same alleged combination of art

[2] The institution of an IPR remains discretionary even if a petition presents a reasonable likelihood of success as to one claim (which Patent Owner submits the Petition has *not* done), as the Board must make "a binary choice—either institute review or don't." *SAS Institute Inc. v. Iancu*, 138 S. Ct. 1348, 1355 (2018).

and argument as to these claim limitations, so that each Ground is commonly deficient as to these claim limitations. Any one or all of these insufficiencies of the Petition warrants denial of institution of the Petition.

1. The Petition Fails To Establish Obviousness Of The Claimed Invention Including Closed-Loop Feedback Regulation (Limitation [1(L)])

The Petition fails to demonstrate that a POSITA would have been motivated to change Okada's open-loop feedback system into the claimed closed-loop feedback system for regulation of receiver voltage/current during charging. (Limitation [1(L)]).

The claims require a communication and control circuit configured to "receive additional information … corresponding to the voltage or current at the output of the receiver circuit while charging the battery of the portable device" and "regulate in a closed loop feedback manner the voltage or current at the output of the receiver circuit in accordance with the received additional information … while charging the battery of the portable device." Okada, the primary reference relied upon in the Petition, teaches away from the claimed closed-loop feedback regulation because it establishes supply of one of three open-loop power levels (low, intermediate, and high) during an initial setup phase. During the subsequent power transfer for charging phase, Okada teaches an open-loop system in which the receiver self-regulates its output charging power with its own circuitry for doing so.

Figure 2 (below) from Okada shows the main components of the transmitter (10) and receiver (40) system. Okada teaches an open-loop charging system wherein the receiver has three components—a regulator (51), a voltage clamp (49), and a charging controller (52)—for *the receiver to self-regulate* the battery charging process. Ex. 1005 (Okada) at [0047]. This is unlike the claimed closed-loop feedback architecture in which the transmitter regulates the voltage / current at the output of the receiver circuit. Because the Okada system is an open-loop architecture, Okada's receiver does not communicate information to the transmitter during charging for use by the transmitter to regulate the receiver circuit current/voltage.

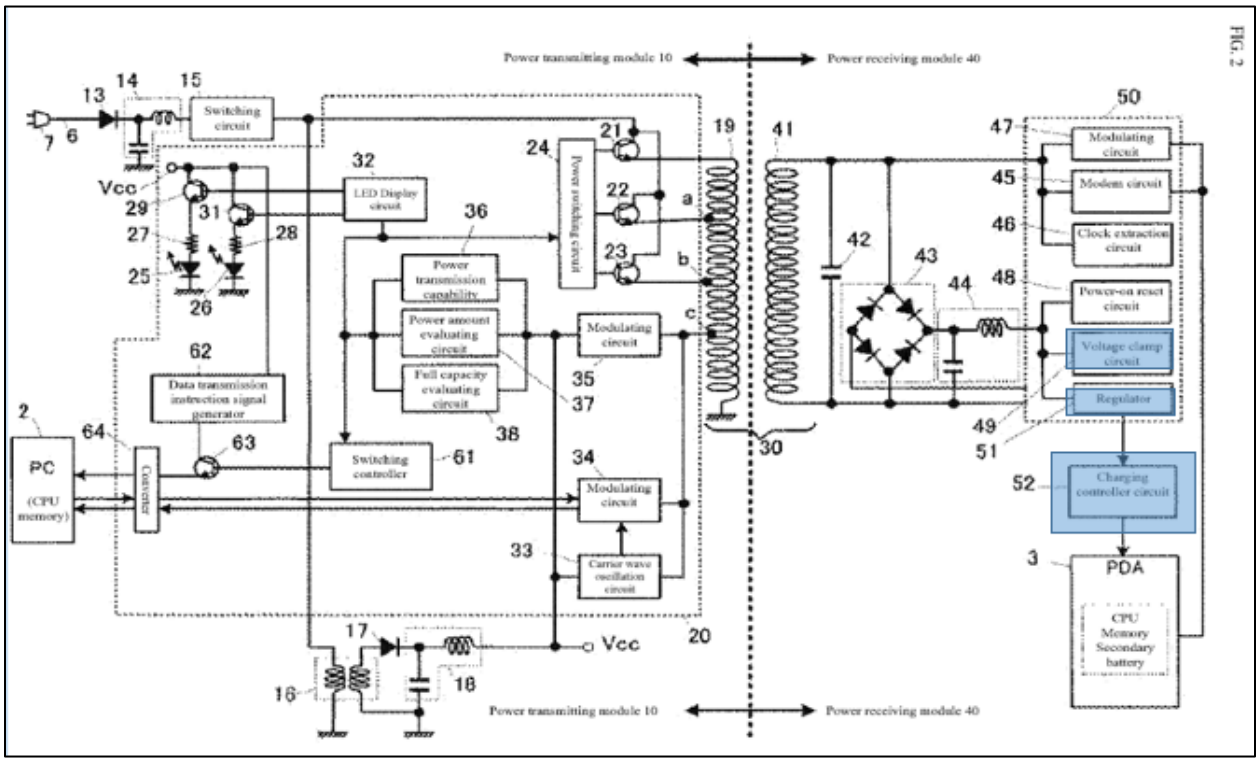

Ex. 1005 (Okada) at [0047].

The open-loop nature of Okada is seen further in Figure 3 (below) of Okada.

Okada Figure 3 is a "flowchart illustrating the flow of power supply operations carried out between the power transmitting module 10 and the power receiving module 40." Ex. 1005 (Okada) at [0059]. Okada describes the operation of its system as follows (unrelated steps omitted):

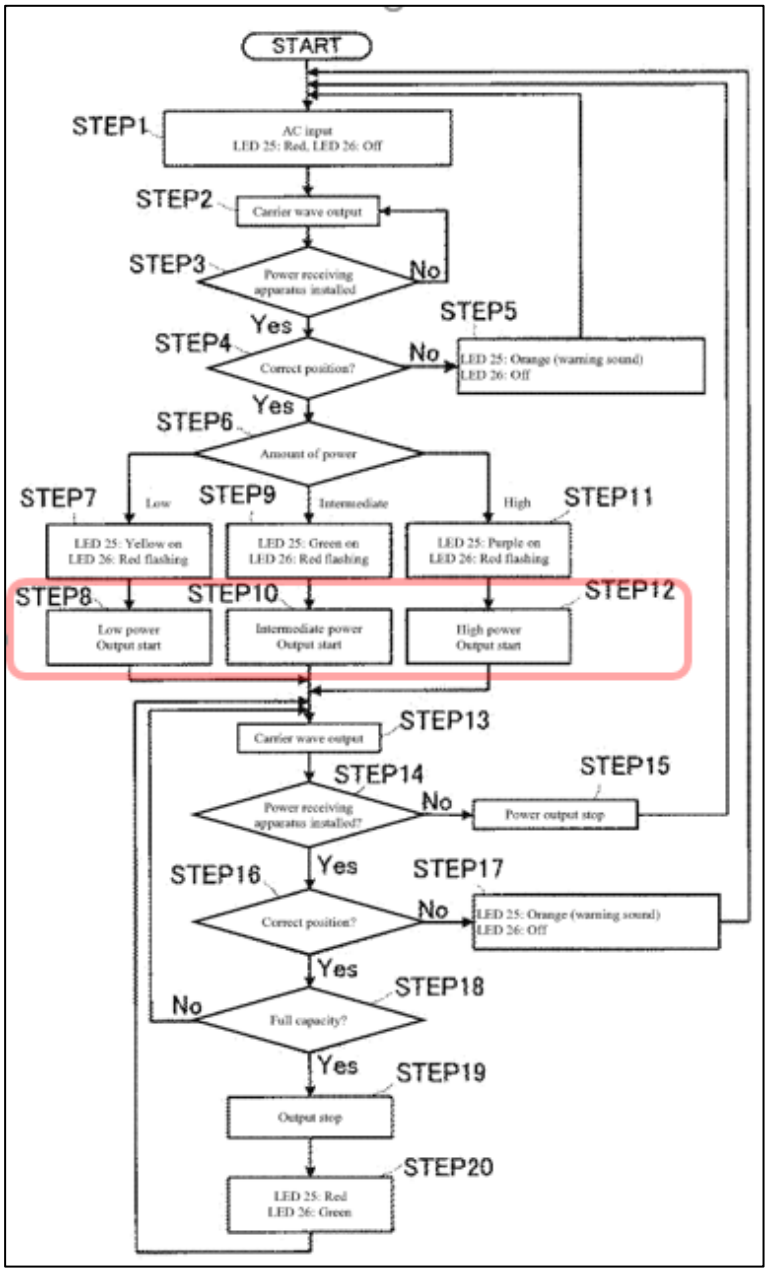

Step 2. The "Oscillating circuit 33 outputs [the] carrier wave." *Id.* at [0062].

Step 3. "This carrier wave is used to determine whether a device capable of receiving power . . . is mounted on the common cradle." *Id*. at [0062].

Step 6–12. If a device capable of receiving power is detected and positioned correctly (Steps 3-4), the receiver transmits to the transmitter a "power consumption information" code (Step 6). The transmitter then sets the power transmission output

to one of three levels (high, intermediate, or low), by a one-time selection of one of the primary-side coil winding sections, used for the duration of the charging. *Id*. at [0069–73].

Step 13-17. After transmission has begun, the carrier wave is "periodically" applied but only to determine if "the device capable of receiving power has been removed from the common cradle" and is positioned correctly. *Id*. at [0074].

Notably, the setting of the transmitter power level (low, intermediate, or high) (Step 6) only occurs once before start of any power transfer for charging. Hence, during charging there is no closed-loop feedback regulation of the receiver voltage/current performed by the transmitter.

Steps 18-20: Finally, the "full capacity information" is merely a single terminating condition that Okada's receiver communicates to the transmitter to indicate full charging of the battery—at which points the transmitter stops the charging process. *Id*. at [0076].

What this tour through Okada demonstrates is that the information from the receiver to the transmitter in Okada is unrelated to any type of dynamic output voltage/current at the receiver for closed-loop feedback regulation as specified by the Challenged Claims. Okada does not teach a transmitter that dynamically adjusts the power it is transmitting based on the receiver output voltage/current. Okada does not teach a receiver that feeds back its output voltage/current level to the transmitter

for such a purpose.

Rather, Okada is designed specifically as an open-loop system. In particular, instead of the transmitter regulating the voltage/current at the receiver, as noted above, the Okada receiver has three components for the receiver to self-regulate the battery charging process. Specifically, at the receiver-side (i.e., the power receiving module 40), the Okada receiver includes regulator (51), voltage clamp (49), and charging controller (52) to control and regulate the output voltage / current used for charging the battery of the portable device, as seen in Fig. 2 above.

Despite this, the Petition makes a conclusory argument that a POSITA would modify Okada per Kook. *See* Pet. at 25. Critically, the Petition fails to establish that it would be obvious to modify Okada somehow per Kook to incorporate closed-loop feedback regulation as claimed. To the contrary, Okada teaches away from the claimed closed-loop feedback regulation because it uses three simple power levels (low, intermediate, and high) established once during the initial setup phase. Moreover, Okada teaches an open-loop receiver that *self-regulates* the battery charging process through its regulator (51), voltage clamp (49), and charging controller (52).

The Petition fails to address any of this. Moreover, the Petition fails to address how a POSITA would add closed-loop feedback regulation to Okada's three-power level system, or why a POSITA would be motivated to do so, with the associated

complexity and cost of seeking to do so, particularly when the Okada receiver has circuitry for self-regulation. The Petition fails to address or discuss how specifically a POSITA would modify both the transmitter and receiver in the Okada system in light of Kook to have closed-loop feedback regulation as claimed, let alone explaining that a POSITA would have had an expectation of success in doing so.

Accordingly, the Petition has failed to demonstrate obviousness of the closed-loop feedback regulation aspects of the Challenged Claims.

2. The Petition Fails To Establish Obviousness Of The Claimed Invention Including A Planar Coil (Limitation [1(C)])

The Challenged Claims require that "a first primary coil that is substantially planar and substantially parallel to a surface of the system." The Petition admits that Okada does not disclose this claim element, and instead asserts that in view of Odendaal, a POSITA could or would somehow replace Okada's multi-section solenoid coil (formed by multiple taps along the solenoid coil length) with a planar coil. Yet, neither Odendaal nor the Petition explains how this would or could be done in Okada. In reality, such a replacement would present a number of issues for a POSITA to solve to maintain Okada's operability. This is significant because "[c]ombinations of references that render a prior art device inoperable, or that fundamentally change the manner of operation of the device, often will not support a finding of obviousness." *Plas-Pak Indus., Inc. v. Sulzer Mixpac AG*, No. 13-7786,

2014 WL 203101, at *2 (PTAB. Jan. 17, 2014) (citing *In re Ratti*, 270 F.2d 810, 813 (CCPA 1959)), *aff'd*, 600 Fed. Appx. 755 (Fed. Cir. 2015).

Critically, as explained below, the Petition fails to address any of these issues. Rather, the Petition presents merely a conclusory assertion that Okada could be implemented with planar coils. Such a conclusory suggestion is inadequate for institution. *See In re Magnum Oil Tools Int'l, Ltd.*, 829 F.3d at1380–81 ("To satisfy its burden of proving obviousness, a petitioner cannot employ merely conclusory statements. The petitioner must instead articulate specific reasoning, based on evidence of record, to support the legal conclusion of obviousness.").

a. The Petition ignores that Okada's power transfer system is premised on multi-tapped solenoid coils, not planar coils

Even though the Petition contends planar coils were well known (Pet. 15-16), Okada did not mention the possible use of planar coils. Instead, to provide common magnetic coupling and alignment (fundamental to the Okada system design and operation), Okada teaches a system with non-planar, solenoid wire-wound coils 19 and 41, illustrated in Fig. 2 shown below.

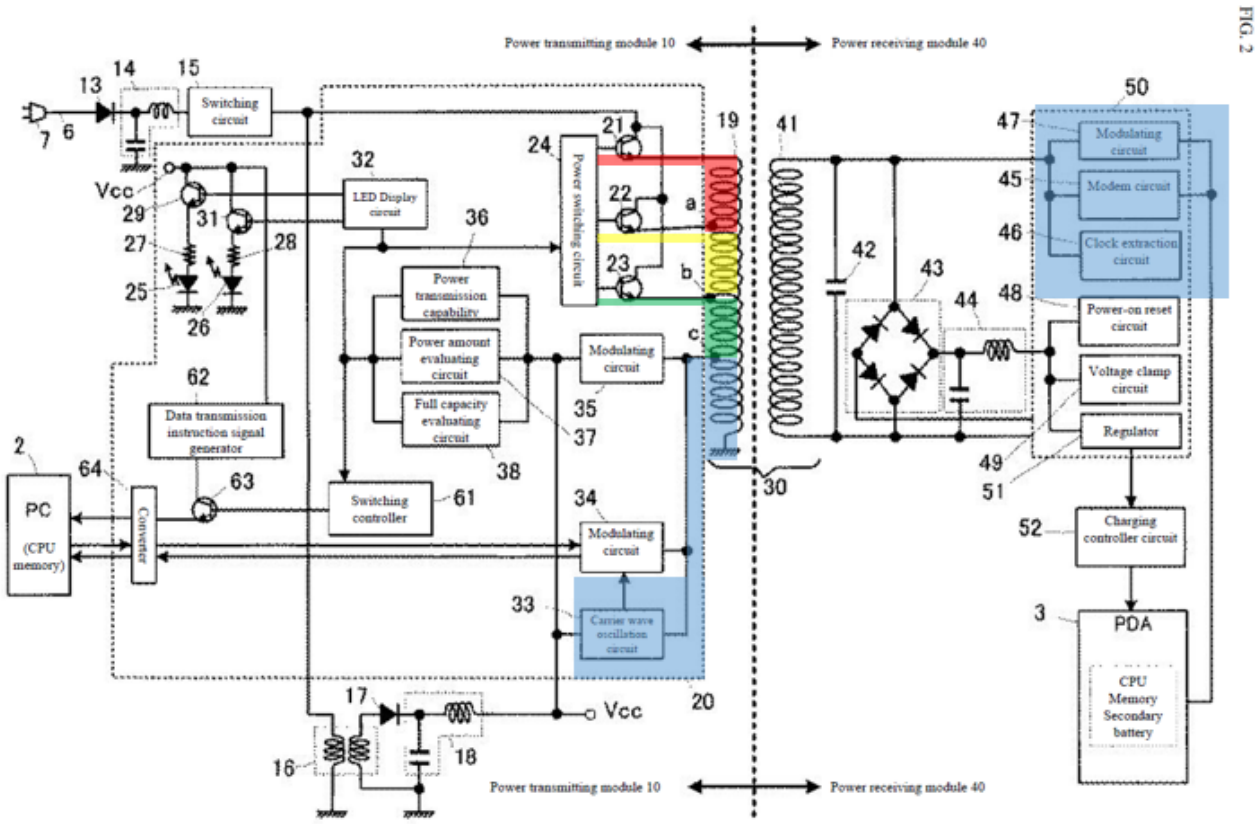

Ex. 1005 (Okada) at Fig. 2 (color added).

Okada Fig. 2 shows how in the power transmitting module 10 (left side) a switching circuit 15 applies an AC power signal to differing primary-side coil 19 sections (by way of taps) to create a system that can supply power to receivers like power receiving module 40 (right side) with different (low, intermediate and high) power requirements. Moreover, Okada Fig. 2 shows how carrier wave oscillation circuit 33 applies a carrier wave to a smallest section of the solenoid primary-side coil 19 (by way of tap c), and how, on that same smallest section of solenoid primary-side coil 19, the power transmitting module 10 (via circuits 35-38) senses and decodes a phase-modulated communication signal from the power receiving module

40 generated by the communication circuit 45–47. Ex. 1005 (Okada) at Fig. 2 & [0042].

Specifically, rather than using the same primary side coil for all power transfer and communication (as specified by the Challenged Claims), Okada uses only the blue portion of the coil 19—from tap "c" to ground—to send a communication carrier wave, receive an information signal from the secondary side coil, and determine whether the secondary side coil is correctly aligned with the primary side coil. Ex. 1005 (Okada) at Fig. 2 (above), [0050], [0063]-[0066]. Then, when the system has determined there is correct alignment between the primary side coil and the secondary side coil and determined the receiver's required power level (low, intermediate, or high), one of three different sections of the primary side coil 19 is enabled using one of three different starting points (starting at red, yellow, or green connected to the switching circuit 15 and continuing to ground) to provide power to charge the receiver-side portable device. Ex. 1005 (Okada) at Fig. 2 (above), [0050], [0063]-[0066].

In this manner, Okada relies only on the blue portion of the primary side coil to determine whether the receiver device is "correctly placed," but then uses one of three larger portions of the primary side coil 19 for charging (from red, yellow, or green to ground). Ex. 1005 (Okada) at Fig. 2. This system purportedly works because of Okada's specific choice of solenoid coils. Namely, in Okada's tapped solenoid

coil structure 19, different sections of the same winding purportedly achieve similar magnetic coupling with the receiver / solenoid secondary side coil 41.

With this consistent magnetic coupling relationship, the Okada system is able to use the magnitude of the information signal applied by the receiver circuit to the secondary side coil, and inductively coupled to the primary side coil, as a proxy for the degree of magnetic coupling between any of the primary side coil sections and the secondary side coil. Ex. 1005 (Okada) at [0067] ("[B]y measuring a signal intensity of the information signal, the amount of positional offset of the common cradle 4 and the PDA 3 can be recognized."). That is, by utilizing multi-tap solenoid coils, Okada can rely on detection of the degree of coupling / alignment between the blue-highlighted *communication section* of the primary side coil and a nearby secondary side coil to determine whether there is correct alignment for the *power delivery sections* of the primary side coil and the same secondary side coil. This alignment process is foundational for the operation of the Okada system. Without this detection and verification, the process will not go forward to the next step. Ex. 1005 (Okada) at Fig. 3 (Step S4 – lack of correct alignment position leading to non-charging and standby status).

After ensuring correct magnetic alignment between the primary side coil and the secondary side coil and receiving the required power level information (Ex. 1005 (Okada) at Fig. 3, Steps 4 and 6), Okada begins power output start for charging the

battery in one of Fig. 3 steps S8, S10 and S12 (for low, intermediate, or high power). By switching between taps of the primary side coil, the "effective number of actual turns of the primary-side coil 19 changes," causing the turns ratio of the two coils to change, thus allowing the power transmission level to change (to low, intermediate or high levels) according to the requirement of the power receiver. Ex. 1005 (Okada) at [0073].

Importantly, Okada's tapped solenoid design allows the system to select a *different* section of the primary side coil 19 with a different number of turns to transfer power at the desired power level (steps S8, S10 or S12 in Fig. 3), secure in the knowledge that each of the three power transfer sections <u>and</u> the communication section are equally well aligned and coupled to the solenoid secondary side coil.

Despite the fact that Okada's tapped solenoid coils are fundamental to the Okada system, the Petition does not address this when proposing that its solenoid coils be replaced with planar coils. Critically, the Petition contains no analysis of the property of common magnetic coupling with Okada's tapped solenoid coils (upon which the Okada system is premised), nor any analysis of whether such common magnetic coupling could be obtained with planar coils, and if so, how. Without this, the Petition does not and cannot show motivation to combine Okada with a planar coil from Odendaal, nor a reasonable expectation of success in doing so. Further deficiencies in the Petition regarding the suggested replacement of Okada's solenoid

coils with planar coils are discussed in the following two subsections.

b. The Petition does not identify any multi-tap planar coil shown by any reference—yet such a coil would be required to replace Okada's solenoid coils with planar coils, as Okada's system relies on multi-tapped coils

While the Challenged Claims do not require taps, Okada's transmitter relies on multiple taps along its coil length to select a section (i.e. a sub-length) of the coil for specific uses. Ex. 1005 (Okada) at Figs. 2, 8 and 17. Thus, the Okada system requires taps. But the Petition does not identify any prior art that shows the use of a planar coil with a tap for selecting a sub-length of the planar coil. Moreover, the Petition does not even attempt to show how Okada could be implemented with planar coils—with or without taps (i.e. by some other method)—let alone that it would have been obvious to do so.

Odendaal only describes simple two-port spiral coils, without *any* taps along the length of the coil, as seen below. Ex. 1008 (Odendaal) at Fig. 1A.

The Petition fails to acknowledge this. Instead, the Petition ignores that Okada's system relies on complex *solenoid* coils tapped in multiple sections (to create four coil sections as seen in Fig. 2, shown above). Ex. 1005 (Okada). More generally, the

Petition fails to identify any multi-tap *planar* coils in the prior art, and it also fails to provide any evidence or argument that a POSITA would somehow be motivated or able to modify Odendaal's planar coil to add taps to it. In arguing that exchanging the solenoids in Okada's system for Odendaal's planar coils would be obvious, the Petition ignores that the Okada system is premised on a multi-section primary coil, not a simple two-port coil as in Odendaal.

The Petition makes the conclusory assumption that a POSITA could simply drop in Odendaal's planar coil as a replacement for Okada's multi-tapped solenoid coil, without any explanation of how the POSITA would figure out how to add multiple taps and access multiple sections of a planar coil or implement the Okada system using planar coils in any other manner. Pet. 16. The Petition assumes (with no showing) that Odendaal's planar coil is a simple drop-in replacement for Okada's tapped solenoid. But it is not a simple drop-in replacement, given Okada's complex system, e.g., relying on a common coupling with a secondary-side coil across its four primary-side coil sections. The Petition fails to show even a single embodiment or explanation of how multi-tap planar coils would allegedly be obvious to implement in Okada's system, thus rendering the Petition insufficient—i.e., the Petition fails to show how it would have been obvious to combine Okada with Odendaal to arrive at the claimed invention, as further pointed out in the next subsection.

c. The Petition ignores that use of only part of a planar coil would substantially impact the transmission coupling / efficiency between the primary-side coil and secondary-side coil, and hence would require an unknown alignment determination process

Odendaal explains that the behavior of a planar coil depends on the "geometric configuration of the spirals and interfaces." Ex. 1008 (Odendaal) at 3:52-57. For example, the magnetic field and thus the magnetic coupling / power transfer efficiency between a multi-tap planar primary side coil and a planar secondary side coil would differ depending on which portion of the planar primary side coil is selected for use—e.g., the outer rings of a planar spiral would behave differently than the inner rings. In addition, the needed alignment position between a planar primary side spiral coil and a planar secondary side coil may vary based on which portion of the planar primary side coil is used.

In contrast, Okada relies on a consistent common coupling and alignment position regardless of which of its four sections of its multi-tap solenoid primary side coil is used. As a result, as explained above, Okada is able to use its shortest section of the solenoid primary side coil (from tap c to ground) to determine alignment, and then apply power to one of three different sections of the primary side coil for power delivery, with the knowledge that having used solenoid primary side and secondary side coils, each of its four primary side coil sections couples similarly to the secondary side coil (i.e., with a common magnetic coupling / efficiency). This

foundational property of the Okada system comes from its solenoid coil geometry. This solenoid geometry provides Okada's alignment characteristics such that when the *information signal* is transmitted by the secondary side coil and received by the primary side coil using tap c, it is strongly correlated to the alignment and coupling characteristics when *power* is transmitted using any of the other three primary side coil sections for power delivery.

The charts in Figures 4A and 4B of Okada below show this consistent relationship for the multi-tap solenoid coil of Okada as a function of misalignment (x-axis), i.e., the maximum coupling / efficiency is at the same alignment position for the information signal and power transfer (namely, at the "0" position on the x-axis).

FIG. 4

(a)

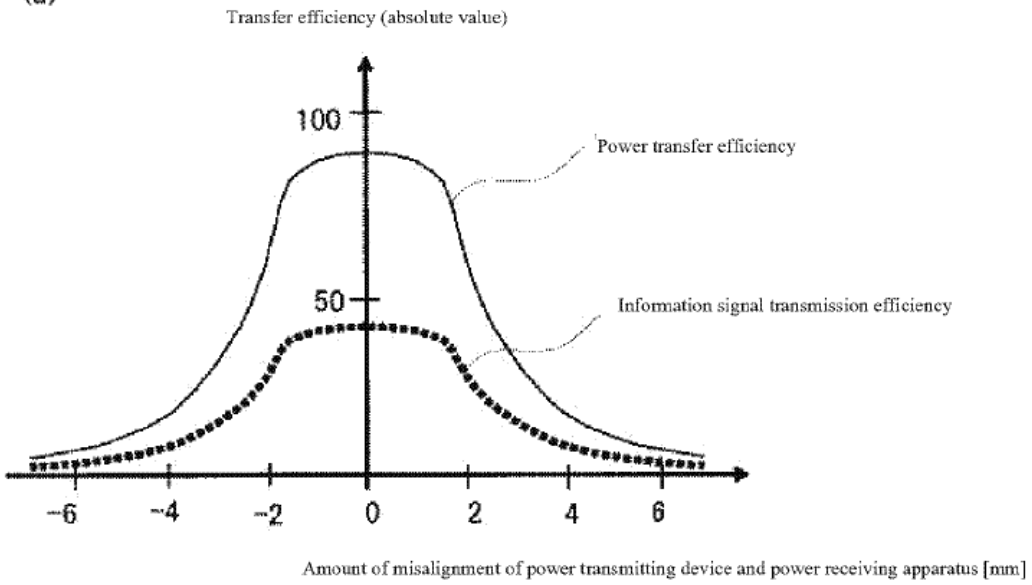

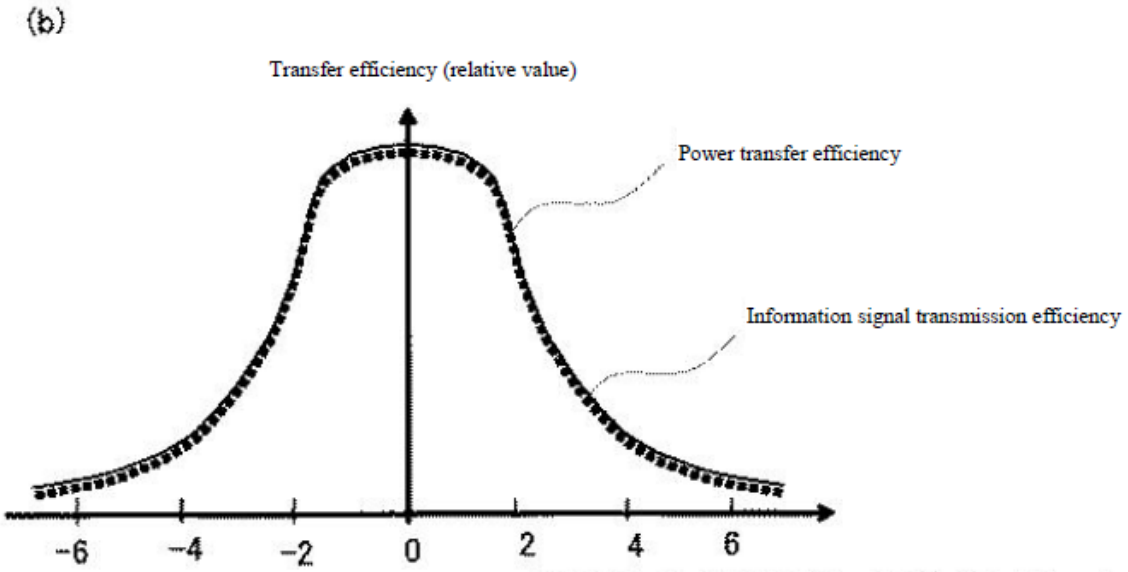

Ex. 1005 (Okada) at Fig. 4A-4B; [0066]-[0068].

In contrast, in a hypothetical planar spiral coil embodiment with multiple taps, the coupling and alignment between different sections of the primary side coil and the secondary side coil would vary depending on which tap (and hence which section of the spiral) is selected. Thus, with such a multi-tap planar spiral coil embodiment, there would be no common coupling across the different coil sections and a secondary side coil. That is, the foundational property of Okada's system (i.e., common coupling across coil sections) would not exist with planar coils. The Petition fails to address or consider this.

In a hypothetical multi-tap planar spiral coil, the shapes and dimensions of different sections of the planar primary side coil will vary widely, and the magnetic coupling with the secondary side coil would involve different overlap and alignment deviations depending on which section of the planar primary side coil is selected by

the taps. For this and other reasons stated above, the Petition contains no analysis of how to implement Okada's alignment process in a combined system using planar coils and whether the alignment of one section of a planar coil is usable as a proxy for alignment of another section of the planar coil or what the effects on the alignment determination process would be.

Furthermore, in a hypothetical multi-tap planar coil geometry, different sections of a spiral primary side coil would magnetically couple differently with a secondary side coil. Such a multi-tap coil would have non-uniform magnetic coupling / power transfer efficiencies between different power delivery sections (and also the carrier wave section) and the secondary side coil. Such a variation of power transfer efficiency in a combined system would be in contrast to Okada's system that provides uniform coupling and power transfer efficiency. Further changes to Okada's system would be required to counteract this non-uniformity and would require unknown changes to Okada's circuits and operational logic.

The Petition, however, provides no analysis to explain how this would be done or how this would work, and without such analysis, the proposed combination is merely conclusory and speculative. The Petition does not show that a POSITA with the simple knowledge of Odendaal's planar coils would be prepared to address any of these complex issues. Critically, the Petition provides no specific showing as to how Odendaal's planar coils would be implemented in Okada's system.

Furthermore, the Petition does not show why a POSITA would be motivated or have any expectation of success given the host of unresolved issues related to using planar coils with Okada's system. Thus, the Petition should also be denied on the basis of the claimed planar coil requirement.

3. The Petition Fails To Establish Obviousness Of The Claimed Invention Including A Drive Circuit And Primary Coil For Powering The Receiver Circuit, Battery Charging, And Receiving Communication

The Challenged Claims, through '371 independent claim 1 and hence also the challenged claims dependent thereon, require that a common "primary coil" and "drive circuit" operate together to provide power delivery *to enable communication* from the receiver unit of the portable device *and to charge the battery* of the portable device. The Challenged Claims also specify that communication from the portable device is received through the same "primary coil" as detected by the "sense circuit."

Specifically, '371 claim 1 specifies that the "first drive circuit … is configured to apply an alternating electrical current to the first primary coil … that allow[s] activation and powering of the receiver unit *and* charging the battery of the portable device." Claim [1(d)(3)]. The claim further specifies that the apparatus is configured to "*operate the <u>first drive circuit</u>* to inductively transfer power from the first primary coil to the receiver coil *to activate and power the receiver unit to enable the receiver circuit to communicate the information detected in the current modulation in <u>the</u>*

first primary coil." Claim [1(h)]. The claim also specifies that a "first sense circuit" detects this communication via the first primary coil, i.e., "detect, through the first sense circuit, a received communication of information in the current modulation *in the first primary coil*." Claims [1(f)] and [1(g)]. The claim further specifies that the apparatus is configured to "operate the *first drive circuit* … to power the receiver unit *and* charge the battery of the portable device." Claim [1(j)]

The antecedent usage of "the first drive circuit" and "the first primary coil" in in the claim requires that the *same* drive circuit and coil are used to provide power delivery to *enable communication* from the receiver unit of the portable device *and charge the battery* of the portable device, *and that the communication is received through the same coil*.

The Petition fails to show this commonality. The Petition attempts to point to Okada for these claim limitations, but the Petition fails to show that Okada teaches the use of the same drive circuit and coil for enabling communication from a portable device *and* charging the portable device, *and with the same coil* receiving the communication from the portable device. The Petition instead references one circuit and coil from Okada for charging, and a separate circuit and coil for communication. Pet. 18-20. In particular, the Petition points to the power switching circuit in Okada (elements 15 and 21-24 in Fig. 2 shown below) generating a first current for providing charging power to power the receiving module 40 (for charging the battery

of the portable device PDA 3) using one of three possible sections of the transmitter (i.e. primary side) coil 19 (from 21 to ground, tap a to ground, or tap b to ground, each constituting a separate coil with respective end points). Pet. 18-20; Ex. 1005 (Okada) at [0049], [0070-0071]. These elements for charge power transfer are shown in blue highlighting in annotated Fig. 2 below, with the left side showing the parts in the power transmitting module 10.

The Petition then points to Okada's separate "carrier wave oscillating circuit 33" used to apply a separate current to a separate coil (formed by tap point c to ground, constituting a separate coil by its end points) for communication with the power receiving module 40. Pet. 18-20, 33; Ex. 1005 (Okada) at [0042] ("carrier wave oscillating circuit 33 that generates a prescribed carrier wave"); *id.* at [0046] (discussing the different charging power switching circuit and the carrier wave oscillating circuit). The elements for the communication circuit are shown below in pink highlighting in the annotated Fig. 2, with the left side showing the parts in the power transmitting module 10.

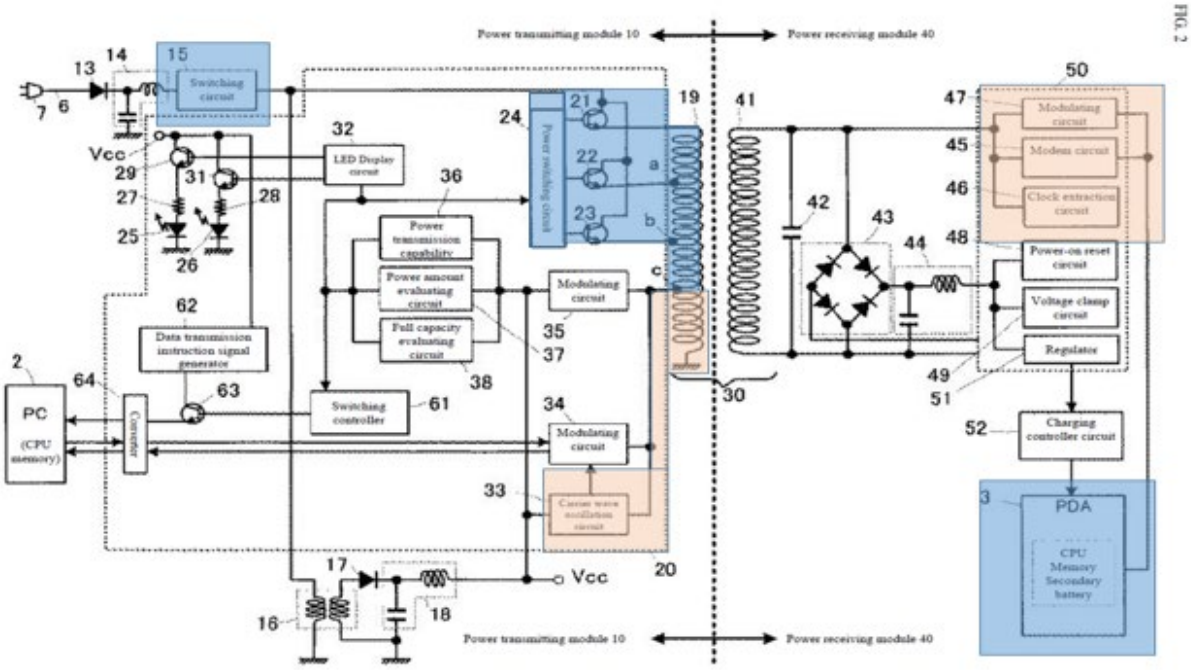

Ex. 1005 (Okada) at Fig. 2 (annotations reflect the different circuits).

Thus, as seen in the Petition and Okada, Okada uses separate circuits and coils for charging and for communication, unlike the challenged claims, which specify that the <u>*same*</u> drive circuit and coil are used to provide power delivery to *enable communication* from the receiver unit of the portable device <u>*and*</u> *to charge the battery* of the portable device, <u>*and*</u> *that the communication is received through the same coil*. That is, the Okada system uses separate circuits and coils, for charging power transfer and for communication, whereas the claimed invention specifies a common set for charging and communication. Because the Petition fails to show what the claim requires in this regard, this is another independent reason the Petition

should be denied.

4. The Petition Fails To Establish Obviousness Of The Claimed Invention Including The Specified Operating Frequency Characteristics (Limitation [1(D)(1)-(3)])

The claims require "**a first drive circuit, including** a FET driver, **a capacitor**, and a FET switch, coupled to a DC voltage input **and coupled to the first primary coil**, wherein during operation the first drive circuit is configured to apply an alternating electrical current to **the first primary coil** at **an operating frequency** and duty cycle . . . **wherein the operating frequency is** within a range of frequencies (i) that are **near a resonance frequency** of a circuit comprising the **first primary coil and the capacitor**, (ii) **such that increasing values of the operating frequency** within the range of frequencies would **correspond to a lower voltage or current induced** in an output of the receiver circuit." (emphasis added). The Petition attempts to show this by some *hypothesized non-specific* modification of Okada in view of Kook.

The Petition is insufficient in this attempt. The Petition fails to show that a POSITA would have been motivated and had an expectation of success to modify Okada in view of Kook to operate near a resonance frequency with the characteristics as claimed. Moreover, the Petition fails to show that even if a POSITA somehow attempted to modify Okada in view of Kook that the resulting system would have the operating frequency characteristics specified by the claim. These issues are

addressed in turn in the following.

The Petition fails to demonstrate that a POSITA would have been motivated with an expectation of success to modify Okada somehow in view of Kook to operate at a near resonant frequency with the claimed characteristics. As the Petition admits, Okada does not include a capacitor coupled to the one or more primary coils and does not operate near a resonance of a circuit as described in the claim element. Pet. 21. To try to remedy this, the Petition points to Kook. Pet. 25-27. However, the Petition fails to consider the complexities and implications of adding capacitance and resonance frequency control to Okada. The Petition fails to show that there would have been a motivation to combine Okada and Kook to arrive at this claimed limitation.

As previously discussed, Okada includes four primary side coil sections at the transmitter, three of which are used for power transfer / charging of the portable device, with one chosen depending on whether low, intermediate or high power is requested by the receiver. Achieving resonance in Okada would require addressing each of these coil sections (each with a different inductance value) including by, for example, somehow coupling each to a corresponding capacitor, which would be complex, costly, and introduce uncertainty. The Petition fails to address this and thus has not established obviousness of this claim limitation.

Consider again Fig. 2 of Okada (reproduced again below). Okada's system

can apply three different power levels to three different types of receivers (low, intermediate and high power) based on a "Power Consumption Information" information message sent from the receiver to the transmitter. Ex. 1005 (Okada) at [0069]-[0072]; *see also* Section III.C.1, *supra*. Upon receiving this message, the transmitter selects one of the three switches 21, 22 or 23 to apply the switching circuit 15 output to a section of the primary side solenoid coil 19 selected by the switches. Ex. 1005 (Okada) at [0069]-[0072]; *see also* Section III.C.2.a, *supra*. These correspond to (i) total length of the solenoid coil 19 for provision of power at one power level, (ii) from tap point a to ground for another power level, or (iii) tap point b to ground for a third power level, representing three different inductance values. Ex. 1005 (Okada) at [0050]. In addition, the Okada system includes a communication channel using a carrier wave applied to tap point c that is used to communicate with the receiver. Ex. 1005 (Okada) at [0050]. The tap point c to ground primary side coil length represents a fourth inductance value. Each of these four lengths of coil and associated inductance values would affect the resonance seen by the drive circuit. The Petition fails to address this.

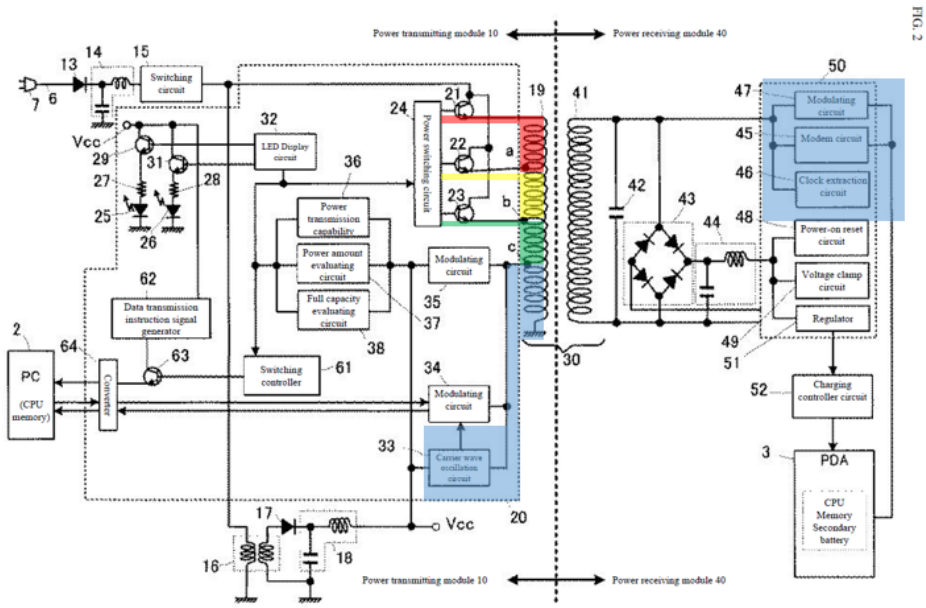

Given that Okada primary side coil uses three different inductor values to provide power to three different types of receivers and their secondary side coils and another communication inductor value for coupling to any of the three secondary side coils (to allow communication with any type of receiver), it is not at all obvious how resonance between the four sections of the primary side coil and all three receivers and their secondary side coils would be achieved. Implementation of any system would somehow require multiple resonant capacitors and capacitor switching circuitry and complex control. Particularly in light of the complexity, additional cost, and unknowns of such a potential modified system—*which the Petition fails to address*—the Petition fails to establish that a POSITA would have been motivated to modify Okada per Kook in this regard, let alone with an expectation of success.

The Petition fails to demonstrate that Kook teaches the claimed frequency

range characteristics. Moreover, aside from the issues of lack of motivation to combine and expectation of success, the Petition fails to demonstrate how Kook teaches a drive circuit with the claimed frequency range characteristics. The claims require the drive circuit apply an alternating electrical current at an operating frequency "within a range of frequencies (i) that are **near a resonance frequency** of a circuit comprising the first primary coil and the capacitor, (ii) **such that increasing values of the operating frequency within the range of frequencies would correspond to a lower voltage or current** induced in an output of the receiver circuit." The Petition argues Kook suggests this limitation. Pet. 31-33. But as the Petition acknowledges, Kook states that its system can operate at a frequency ***"higher" <u>or</u> "lower"*** than a resonance frequency. Pet. 31. Thus, Kook teaches nothing specific about the operating frequency range.

Moreover, Kook says nothing about how to achieve the claimed characteristic of the operating frequency range such that higher frequencies decrease the induced output voltage/current of the receiver circuit, let alone that it would be desirable to have this characteristic. Instead, the Petition relies solely on inferences *from its expert* for this operating frequency characteristic. Pet. 32 (citing three times to its expert declaration at Petition Exhibit 1002 and never citing to Kook which is Petition Exhibit 1059). Moreover, the Petition does not show how Kook teaches a circuit structure or operation for achieving this. Thus, the Petition fails to establish that

Kook teaches the claimed drive circuit with the specified operating frequency range characteristics.

Accordingly, the Petition establishes *neither* that it would have been obvious to combine Okada and Kook to make a drive circuit having the claimed operating frequency range characteristics, that there would have been motivation to attempt to do so, *nor* that even if one were to attempt to do so, the claim limitation would be achieved.

IV. CONCLUSION

For any or all of the above-described reasons, Patent Owner respectfully requests that the Board deny institution.

Dated: November 13, 2023

Respectfully submitted,

/s/Steven J. Pollinger

Steven J. Pollinger
Reg. No. 35,326
spollinger@mckoolsmith.com
George Fishback
Reg. No. 76,345
gfishback@mckoolsmith.com
MCKOOL SMITH, P.C.
303 Colorado Street, Suite 2100
Austin, Texas 78701
Telephone: (512) 692-8700
Facsimile: (512) 692-8744

Ryan McBeth
Reg. No. 69,817
rmcbeth@mckoolsmith.com
MCKOOL SMITH, P.C.
600 Travis St., Suite 7000
Houston, Texas 77002
Telephone: (713)485-7300
Facsimile: (713) 485-7344

Christopher P. McNett
Reg. No. 64,489
cmcnett@mckoolsmith.com
MCKOOL SMITH, P.C.
1999 K Street NW, Suite 600
Washington, D.C. 20006
Telephone: (202) 370-8300
Facsimile: (202) 370-8344

Counsel for Patent Owner, Mojo Mobility Inc.

CERTIFICATION OF WORD COUNT

The undersigned hereby certifies that the portions of the above-captioned **PATENT OWNER'S PRELIMINARY RESPONSE** specified in 37 C.F.R. § 42.24 have 11,342 words, in compliance with the 14,000 word limit set forth in 37 C.F.R. § 42.24(b)(1). This word count was prepared using Microsoft Word 2010.

Date: November 13, 2023

Respectfully submitted,

/s/ Steven J. Pollinger
Steven J. Pollinger
Reg. No. 35,326

CERTIFICATION OF SERVICE

The undersigned hereby certifies that the above-captioned **PATENT OWNER'S PRELIMINARY RESPONSE** is being served on counsel for petitioner via electronic mail on, in its entirety on the following counsel of record for Petitioner:

Joseph E. Palys
Naveen Modi
Howard Herr
PH-Samsung-MojoMobility-IPR@paulhastings.com

Date: November 13, 2023

Respectfully submitted,

/s/ Steven J. Pollinger
Steven J. Pollinger
Reg. No. 35,326