UNITED STATES PATENT AND TRADEMARK OFFICE

BEFORE THE PATENT TRIAL AND APPEAL BOARD

SAMSUNG ELECTRONICS CO., LTD.
Petitioner

v.

MOJO MOBILITY INC.
Patent Owner

Patent No. 11,316,371

PETITION FOR *INTER PARTES* REVIEW
OF U.S. PATENT NO. 11,316,371

TABLE OF CONTENTS

I. INTRODUCTION 1

II. MANDATORY NOTICES 1

III. PAYMENT OF FEES 2

IV. GROUNDS FOR STANDING 2

V. PRECISE RELIEF REQUESTED AND GROUNDS 2

VI. LEVEL OF ORDINARY SKILL 4

VII. THE '371 PATENT 5

VIII. CLAIM CONSTRUCTION 5

IX. DETAILED EXPLANATION OF GROUNDS 6

A. Ground 1: Claim 9 is obvious over *Okada* in view of *Odendaal*, *Kook, Calhoon, Black*, *Symons*, *Shima*, and *Hui-027* 6

1. Claim 1 6

2. Claim 9 61

B. Ground 2: Claim 10 is obvious over *Okada* in view of *Odendaal*, *Kook, Calhoon, Black*, *Symons*, *Shima*, *Hui-027*, and *Hahn* 74

1. Claim 10 74

C. Ground 3: Claim 15 is obvious over *Okada* in view of *Odendaal*, *Kook, Calhoon, Black,* and *Ahn* 79

1. Claim 15 79

D. Ground 4: Claim 16 is obvious over *Okada* in view of *Odendaal*, *Kook*, *Calhoon*, *Black*, *Shima*, *Cho*, and *Hui-027* 84

1. Claim 16 84

X. DISCRETIONARY DENIAL IS NOT APPROPRIATE 93

XI. CONCLUSION.....97

XII. APPENDIX A (CLAIM LISTING) 98

LIST OF EXHIBITS

Ex.1001	U.S. Patent No. 11,316,371
Ex.1002	Declaration of R. Jacob Baker, Ph.D., P.E.
Ex.1003	Curriculum Vitae of R. Jacob Baker, Ph.D., P.E.
Ex.1004	Prosecution History of U.S. Patent No. 11,316,371
Ex.1005	Translation of Japanese Patent Application Publication No. 2006-141170A ("*Okada*")[1]
Ex.1006	U.S. Patent No. 6,912,137 ("*Berghegger*")
Ex.1007	U.S. Patent Application Publication No. 2006/0145660A1 ("*Black*")
Ex.1008	U.S. Patent No. 6,960,968 ("*Odendaal*")
Ex.1009	U.S. Patent No. 6,489,745 ("*Koreis*")
Ex.1010	U.S. Patent No. 6,366,817 ("*Kung*")
Ex.1011	Physics, Henry Semat et al., Rinehart & Co., Inc., 1958, Chapters 29-32 ("*Semat*")
Ex.1012	U.S. Patent No. 5,702,431 ("*Wang*")
Ex.1013	International Patent Application Publication No. WO1996040367 ("*WangII*")
Ex.1014	Handbook of Radio and Wireless Technology, Stan Gibilisco, McGraw-Hill, 1999 ("*Gibilisco*")
Ex.1015	U.S. Patent No. 4,942,352 ("*Sano*")

[1] Exhibit 1005 includes the original Japanese version and a certified English translation. Citations to *Okada* are to the English translation.

Ex.1016	Fundamentals of Electric Circuits, 2d., Charles Alexander et al., McGraw-Hill, 2004 ("*Alexander*")
Ex.1017	International Patent Application Publication No. WO1994/18683 ("*Koehler*")
Ex.1018	Mojo Mobility's Infringement Chart for U.S. Patent No. 11,316,371 (Ex. 4) accompanying Mojo Mobility's Infringement Contentions in *Mojo Mobility Inc. v. Samsung Elecs. Co., Ltd.*, No. 2:22-cv-00398 (E.D. Tex.) (February 28, 2023)
Ex.1019	U.S. Patent Application Publication No. 2005/0068019 ("*Nakamura*")
Ex.1020	U.S. Patent Application Publication No. 2007/0109708 ("*Hussman*")
Ex.1021	U.S. Patent Application Publication No. 2003/0210106 ("*Cheng*")
Ex.1022	Mojo Mobility's Infringement Contentions in *Mojo Mobility Inc. v. Samsung Elecs. Co., Ltd.*, No. 2:22-cv-00398 (E.D. Tex.) (February 28, 2023)
Ex.1023	U.S. Patent Application Publication No. 2004/0201988 ("*Allen*")
Ex.1024	U.S. Patent No. 7,378,817 ("*Calhoon-817*")
Ex.1025	International Patent Application Publication No. WO2003/096361 ("*Cheng*")
Ex.1026	International Patent Application Publication No. WO2004/038888 ("*ChengII*")
Ex.1027	Spiral Inductor Design for Quality Factor, Sang-Gug Lee et al., Journal of Semiconductor Technology and Science, Vol. 2. No. 1, March 2002 ("*Lee*")
Ex.1028	U.S. Patent Application Publication No. 2001/0055207 ("*Barbeau*")
Ex.1029	AN710 Antenna Circuit Design for RFID Applications
Ex.1030	U.S. Patent No. 6,606,247 ("*Credelle*")

Ex.1031	RESERVED
Ex.1032	U.S. Patent No. 5,808,587 ("*Shima*")
Ex.1033	RESERVED
Ex.1034	RESERVED
Ex.1035	RESERVED
Ex.1036	International Patent Application Publication No. WO2003/105308A1 ("*Hui*")
Ex.1037	U.S. Patent No. 5,780,992 ("*Beard-1*")
Ex.1038	RESERVED
Ex.1039	U.S. Patent No. 5,631,539 ("*Beard-2*")
Ex.1040	RESERVED
Ex.1041	U.S. Patent Application Publication No. 2005/0127868A1 ("*Calhoon*")
Ex.1042	RESERVED
Ex.1043	RESERVED
Ex.1044	U.S. Patent Application Publication No. 2007/0145830A1 ("*Lee-II*")
Ex.1045	U.S. Patent Application Publication No. 2007/0267718A1 ("*Lee-Via*")
Ex.1046	RESERVED
Ex.1047	U.S. Patent Application Publication No. 2006/0202665 ("*Hsu*")
Ex.1048	International Patent Application Publication No. WO2009155000A2 ("*Lin*")
Ex.1049	U.S. Patent Application Publication No. 2008/0067874 ("*Tseng*")
Ex.1050	U.S. Patent No. 9,356,473 ("*Ghovanloo*")

Ex.1051	Memorandum from Director Vidal (June 21, 2022)
Ex.1052	Federal Court Management Statistics (December 2022)
Ex.1053	Docket Control Order of March 28, 2023, *Mojo Mobility Inc. v. Samsung Elecs. Co., Ltd.*, No. 2:22-cv-00398 (E.D. Tex.)
Ex.1054	RESERVED
Ex.1055	RESERVED
Ex.1056	U.S. Patent No. 6,459,383 ("*Delatorre*")
Ex.1057	International Patent Application Publication No. WO1999050806A1 ("*Cunningham*")
Ex.1058	International Patent Application Publication No. WO2004026129A1 ("*Due-Hansen*")
Ex.1059	U.S. Patent Application Publication No. 2009/0261778 ("*Kook*")
Ex.1060	RESERVED
Ex.1061	International Patent Application Publication No. WO2002/37641 ("*Cho*")
Ex.1062	U.S. Patent Application Publication No. 2007/0022058 ("*Labrou*")
Ex.1063	ATMEL e5530 Data Sheet (2002)
Ex.1064	U.S. Patent Application Publication No. 2003/0095027 ("*Hui-027*")
Ex.1065	International Patent Application Publication No. WO2008/016273 ("*Hahn*")
Ex.1066	U.S. Patent Application Publication No. 2006/0208711 ("*Soldano*")
Ex.1067	U.S. Patent Application Publication No. 2005/0270805 ("*Yasumura*")
Ex.1068	U.S. Patent Application Publication No. 2005/0288743 ("*Ahn*")
Ex.1069	U.S. Patent Application Publication No. 2007/0285030 ("*Okamoto*")

Ex.1070	U.S. Patent Application Publication No. 2008/0272889 ("*Symons*")
Ex.1071	U.S. Patent Application Publication No. 2009/0027136 ("*Traa*")
Ex.1072	U.S. Patent Application Publication No. 2002/0071301 ("*Kinghorn*")
Ex.1073	RESERVED
Ex.1074	RESERVED
Ex.1075	Watson, J., Mastering Electronics, Third Ed., McGraw-Hill, Inc. (1990) ("*Watson*")
Ex.1076	Sedra, A., *et al.*, Microelectronic Circuits, Fourth Ed., Oxford University Press (1998) ("*Sedra*")
Ex.1077	GB Patent Application Publication No. 2202414 ("*Logan*")
Ex.1078	U.S. Patent No. 7,226,442 ("*Sheppard*")

I. INTRODUCTION

Petitioner requests *inter partes* review of claims 9-10 and 15-16 ("challenged claims") of U.S. Patent No. 11,316,371 (Ex.1001) assigned to Mojo Mobility Inc. ("PO").

II. MANDATORY NOTICES

Real Parties-in-Interest: Petitioner identifies the following as the real parties-in-interest: Samsung Electronics Co., Ltd., and Samsung Electronics America, Inc.

Related Matter: The '371 patent is at issue in the following matter(s):

- *Mojo Mobility Inc. v. Samsung Electronics Co., Ltd.*, No. 2-22-cv-00398 (E.D. Tex.) (asserting the '371 patent and also U.S Patent Nos. 9,577,440, 11,292,349, 11,201,500, 7,948,208, 11,342,777, and 11,462,942) ("Texas Litigation").
- Petitioner is filing concurrently herewith petitions for *inter partes* review challenging other claims of the '371 patent

The '371 patent originates from U.S. Patent Application No. 17/507,323, filed on Oct. 21, 2021, which is a continuation or continuation-in-part of a sequence of applications dated as early as Jan. 30, 2007. (Ex.1001, Cover.) The '371 patent also lists multiple provisional applications dated as early as Jan. 31, 2006. (*Id.*)

Counsel and Service Information: Lead counsel: Joseph E. Palys (Reg. No. 46,508), and Backup counsel are (1) Naveen Modi (Reg. No. 46,224), (2) Howard Herr (*pro hac vice* admission to be requested). Service information is Paul Hastings LLP, 2050 M St., Washington, D.C., 20036, Tel.: 202.551.1700, Fax: 202.551.1705, email: PH-Samsung-MojoMobility-IPR@paulhastings.com. Petitioner consents to electronic service.

III. PAYMENT OF FEES

The PTO is authorized to charge any fees due during this proceeding to Deposit Account No. 50-2613.

IV. GROUNDS FOR STANDING

Petitioner certifies that the '371 patent is available for review and Petitioner is not barred or estopped from requesting review on the grounds identified herein.

V. PRECISE RELIEF REQUESTED AND GROUNDS

The challenged claims should be canceled as unpatentable based on the following grounds under 35 U.S.C. § 103(a):

Ground 1: Claim 9 is obvious over *Okada*, *Odendaal*, *Kook, Calhoon, Black, Symons*, *Shima*, and *Hui-027*;

Ground 2: Claim 10 is obvious over *Okada*, *Odendaal*, *Kook, Calhoon, Black*, *Symons*, *Shima*, *Hui-027*, and *Hahn*;

Ground 3: Claim 15 is obvious over *Okada*, *Odendaal*, *Kook, Calhoon, Black*, and *Ahn*; and

Ground 4: Claim 16 is obvious over *Okada*, *Odendaal*, *Kook, Calhoon*, *Black*, *Shima, Cho, and Hui-027*.

In the Texas Litigation, PO identified the following priority dates for the challenged claims (and possibly up to three months earlier):

(a) 7/30/2007: claims 9, and 15

(b) 12/12/2007: claims 10 and 16

(Ex.1022, 6-8.) Without conceding such dates are appropriate, Petitioner assumes for this proceeding those are the effective date(s) for the challenged claims. The asserted prior art herein qualifies as prior art as follows:

Okada (published: 6/1/2006)	§102(b)
Odendaal (filed: 6/26/2002; issued: 11/1/2005)	§§102(b), 102(e)
Black (filed: 12/8/2005; published: 7/6/2006)	
Calhoon (filed: 12/12/2003; published: 06/16/2005)	
Shima (filed: 3/21/1997; published: 09/15/1998)	
Hui-027 (filed: 10/28/2002; published: 05/22/2003)	

Cho (filed: 11/06/2001; published: 05/10/2002)	
Ahn (filed: 06/02/2005; published: 12/29/2005)	
Kook (filed: 10/25/2006; published: 10/22/2009)	§102(e)
Symons (filed: 1/19/2006; published: 11/6/2008	
Hahn (filed: 08/02/2007; published: 02/07/2008)	

VI. LEVEL OF ORDINARY SKILL

A person of ordinary skill in the art as of the claimed priority date of the '371 patent ("POSITA") would have had at least a master's degree in electrical engineering, or a similar discipline, and two or more years of experience with wireless charging systems, including, for example, inductive power transfer systems. (Ex.1002, ¶¶20-21.)[2] More education can supplement practical experience and vice versa. (*Id.*)

[2] Petitioner submits the declaration of R. Jacob Baker, Ph.D., P.E. (Ex.1002), an expert in the field of the '371 patent. (Ex.1002, ¶¶1-21, 22-65; Ex.1003.)

VII. THE '371 PATENT

The '371 patent claims were allowed over prior art that allegedly did not teach/suggest the claimed "communication and control circuit" and "regulat[ing]" (Ex.1004, 733-737; *see also id.*, 387-406, 632-636, 600-628, 694-727). However, those features, and others, recited in the challenged claims relate to a compilation of conventional components/features known in the prior art. *See In re Gorman*, 933 F.2d 982, 986 (Fed. Cir. 1991). (*Infra* §IX; Ex.1002, ¶¶22-68, 69-116, 117-296; Exs.1005-1017, 1019-1021, 1023-1030, 1032, 1036-1037, 1039, 1041, 1044-1045, 1047-1050, 1056-1059, 1061-1072, 1075-1078.)

VIII. CLAIM CONSTRUCTION

For purposes of this proceeding, Petitioner believes that no special constructions are necessary to assess whether the challenged claims are unpatentable over the asserted prior art.[3] (Ex.1002, ¶68.) *Toyota Motor Corp. v. Cellport Systems, Inc.*, IPR2015-00633, Paper No. 11 at 16 (Aug. 14, 2015).

---

[3] Petitioner reserves all rights to raise claim construction and other arguments, including challenges under 35 U.S.C. §112, in district court as relevant to those proceedings. *See, e.g.*, *Target Corp. v. Proxicom Wireless, LLC*, IPR2020-00904, Paper 11 at 11–13 (Nov. 10, 2020).

IX. DETAILED EXPLANATION OF GROUNDS[4]

A. Ground 1: Claim 9 is obvious over *Okada* in view of *Odendaal*, *Kook, Calhoon, Black*, *Symons*, *Shima*, and *Hui-027*

Claim 9 depends from claim 1, which is addressed fist below.

1. Claim 1

a) [1(a)][5]

To the extent limiting, *Okada* discloses this limitation. (Ex.1002, ¶¶119-126; §§IX.A.1(b)-(n).) *Okada* discloses an "**apparatus**" including a "**system**" (§IX.A.1(b)) for inductive powering/charging portable devices. (Ex.1005, Abstract, ¶¶0001, 0047.) FIG. 1 (below) shows power supply system 1 (blue) ("**apparatus**") including PC2, PDA3 (green) ("**portable device**"), and cradle 4 (red) ("**system**") (*see* limitation 1(b)). (Ex.1005, ¶¶0034-0036.)

[4] References to non-asserted prior art demonstrate/support a POSITA's contemporaneous state-of-art knowledge.

[5] All claim language appears in the claim listing provided in Appendix A.

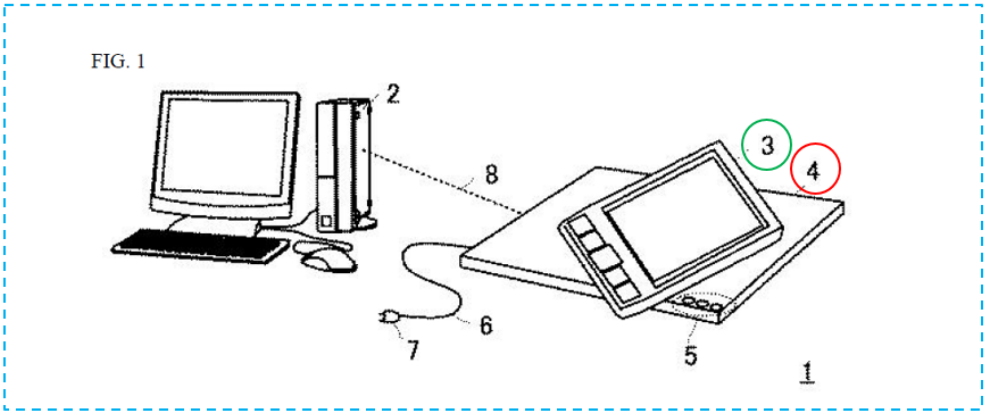

"[M]agnetic coupling" between cradle and PDA "induces voltage" in the "coil in the PDA" to "suppl[y] power to the PDA." (*Id.*, ¶0035; Ex.1002, ¶¶119-120.)

As shown in FIG. 2, cradle 4 includes a **power transmitting module 10** ("PTM10"), and PDA3 includes a **power receiving module 40** ("PRM40"). (*Id.*, ¶¶0035-0037, 0038-0058, FIG. 8, 0110-0111; Ex.1002, ¶121.)

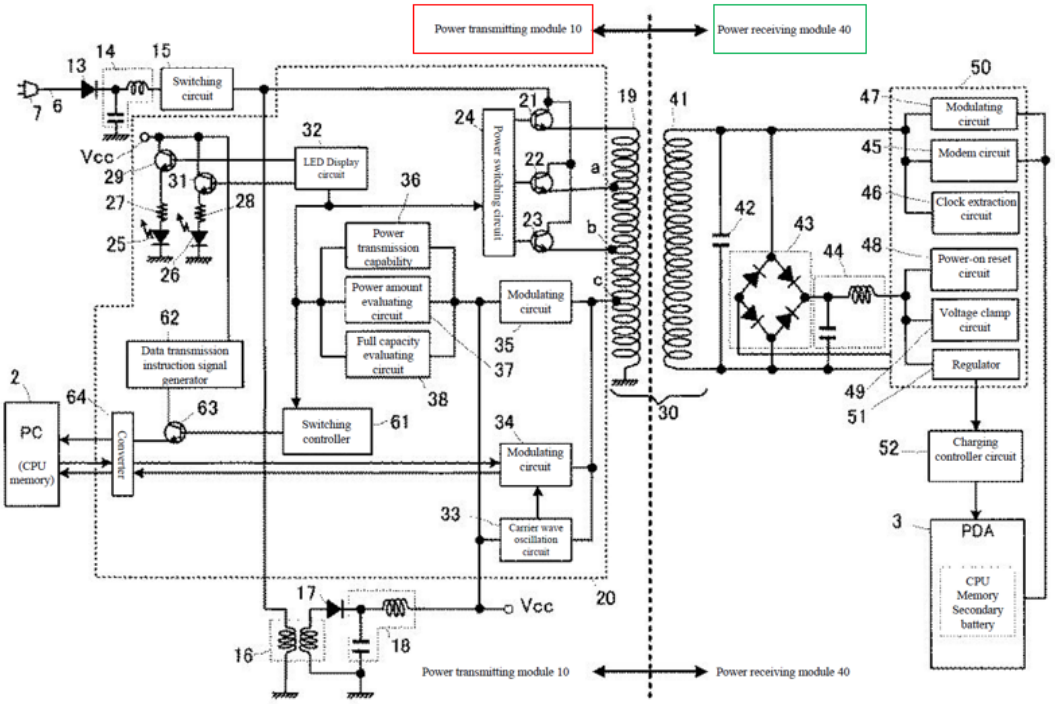

PTM10 converts received power to DC (circuits 13-14) for powering PTM10 components and inductively transferring selected power to PRM40/PDA3. (*Infra* §§IX.A(d)(1)-(3); Ex.1005, ¶¶0038-0040, 0049-0051, 0057, 0063-0073; Ex.1002, ¶¶122-123.)

Okada discloses various configurations of such an "**apparatus**" providing similar functionalities associated with PTM10 and PRM40 (Ex.1005, FIGS. 2, 7-17, ¶¶0009-0032, 0094-0154), and applications of such features in other exemplary "**apparatus(es)**" (*id.*, ¶¶0107, 0116-0132, FIGS. 9-13(b); Ex.1002, ¶¶124-125).

FIG. 9

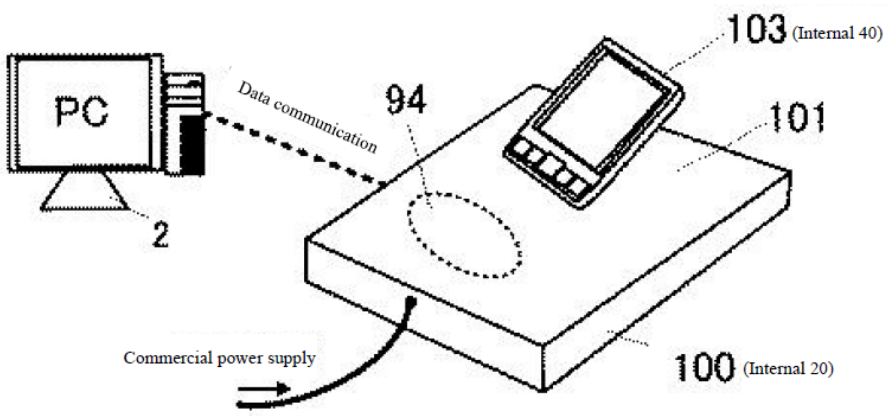

FIG. 10

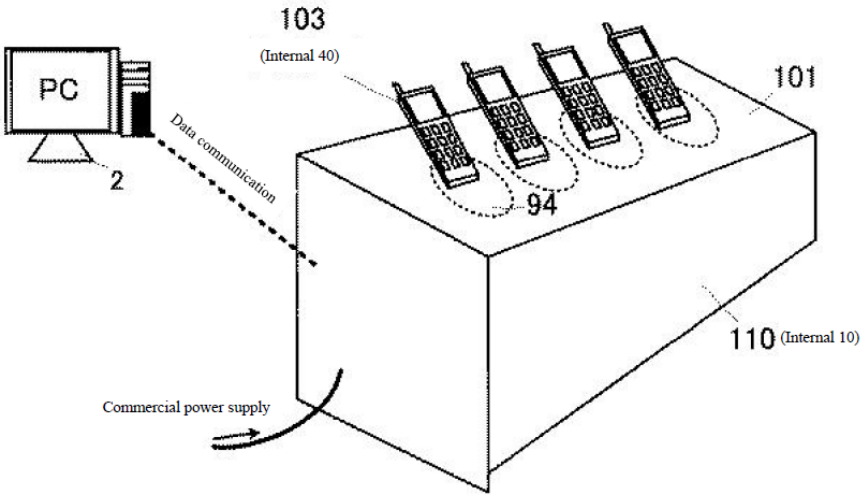
103
(Internal 40)
PC
Data communication
2
101
94
110 (Internal 10)
Commercial power supply

FIG. 11

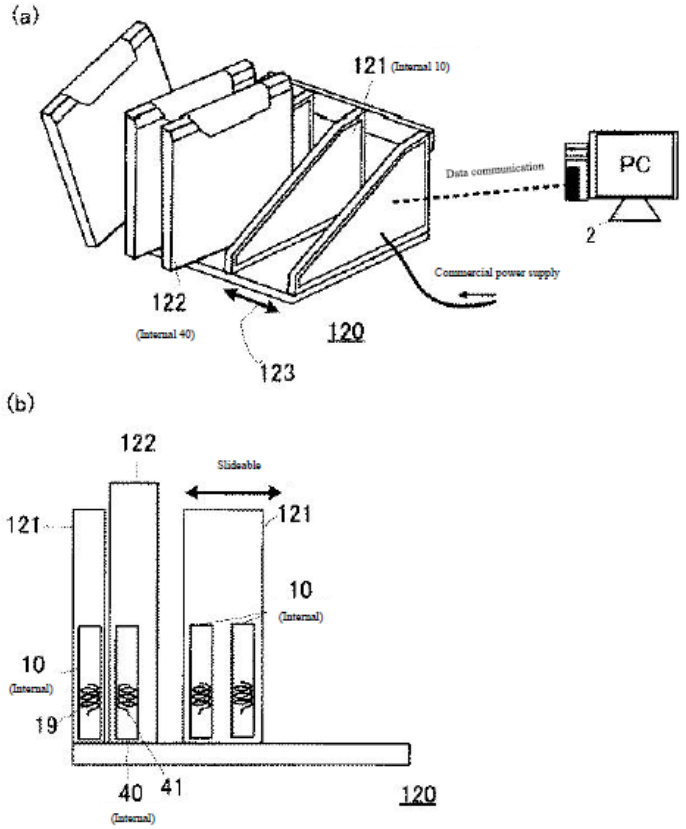
(a)
121 (Internal 10)
Data communication
PC
2
Commercial power supply
122
(Internal 40)
120
123
(b)
122
Slideable
121
121
10
(Internal)
10
(Internal)
19
40
41
(Internal)
120

FIG. 12

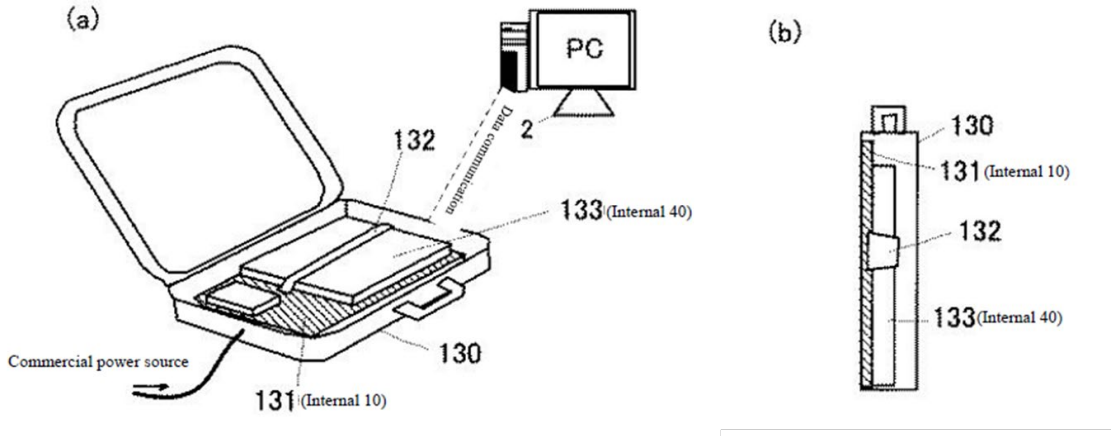
(a)
PC
2
Data communication
132
133 (Internal 40)
130
Commercial power source
131 (Internal 10)
(b)
130
131 (Internal 10)
132
133 (Internal 40)

FIG. 13

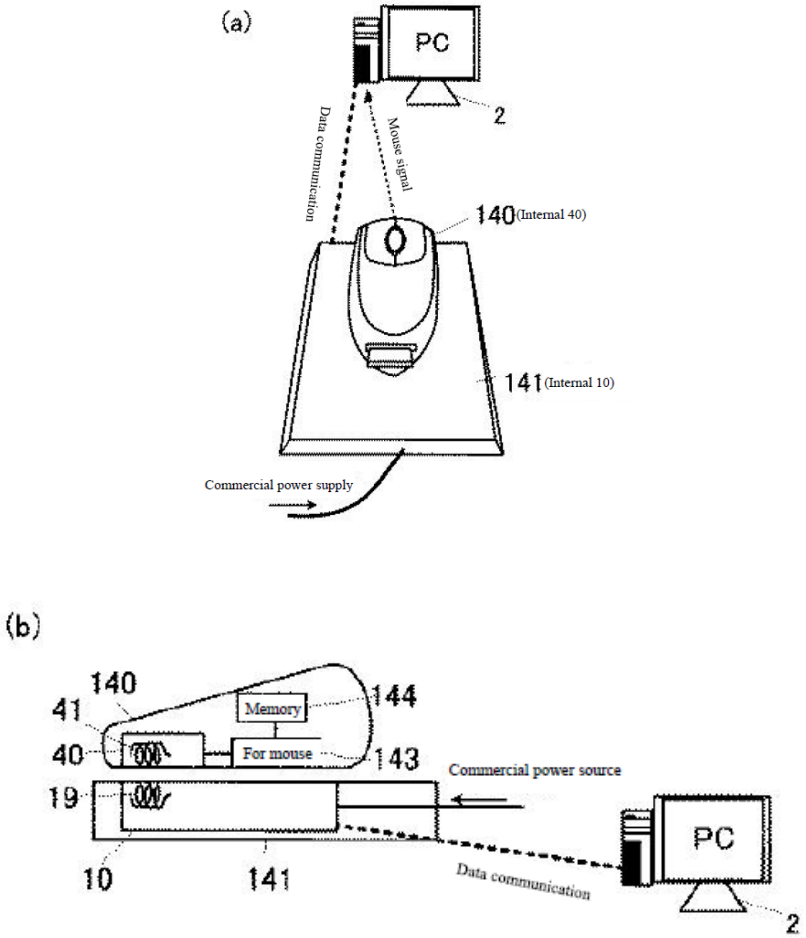
(a)
PC
2
Data communication
Mouse signal
140 (Internal 40)
141 (Internal 10)
Commercial power supply
(b)
140
41
40
19
Memory
144
For mouse
143
Commercial power source
PC
10
141
Data communication
2

FIG. 3 (below) shows "power supply operations…between [PTM10 and PRM40]" applicable to the various configurations. (Ex.1005, FIG. 3, ¶¶0059-0090; 0094-0115.) Any disclosed configuration including features recited in claim 1 (including as modified), as explained below is an "**apparatus**" (*e.g.*, FIGS 1, 2, 7, 9-13). (Ex.1005, ¶0030; §§IX.A.1(b)-(n); Ex.1002, ¶126.)

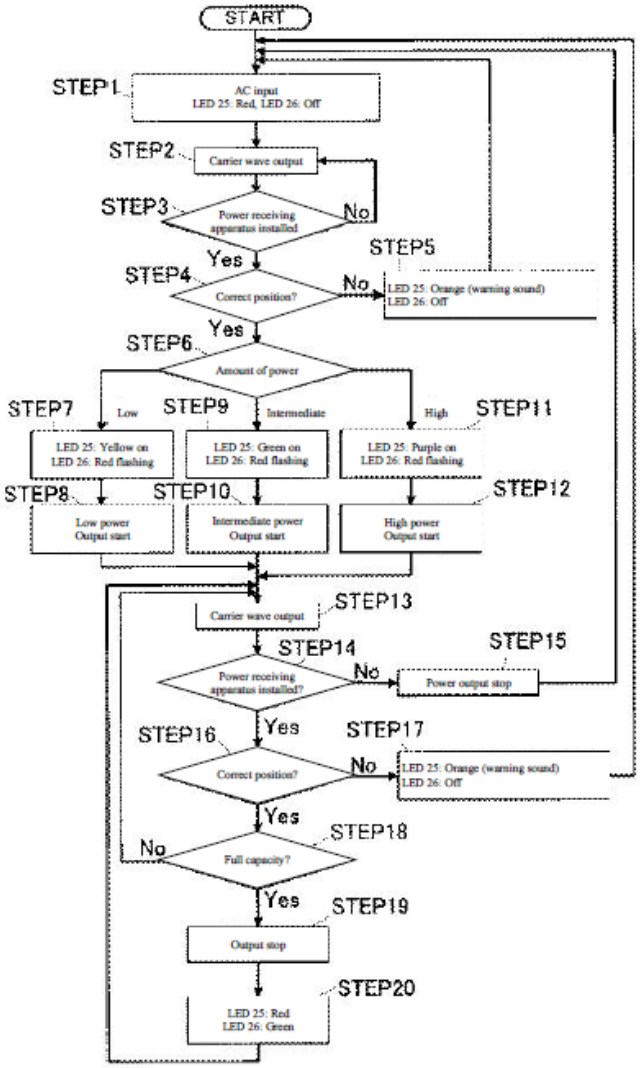

b) [1(b)]

Okada discloses this limitation. (Ex.1002, ¶¶127-128.) Cradle 4/PTM10 ("**system**") "**provid[es] power inductively**" to PDA3 ("**portable device**"). (§IX.A.1(a); Ex.1005, Abstract, ¶¶0001, 0034-0036, 0047.)

The "**portable device**" includes "**a battery and an inductive receiver unit**." PDA3 includes a "secondary battery" and PRM40. (Ex.1005, ¶¶0012, 0015, 0037, FIG. 14, ¶¶0134-0136, FIG. 15, ¶¶0138-0140, FIG. 16, ¶¶0142-0144, claim 4, FIG. 2 (**purple** below); Ex.1002, ¶128.)

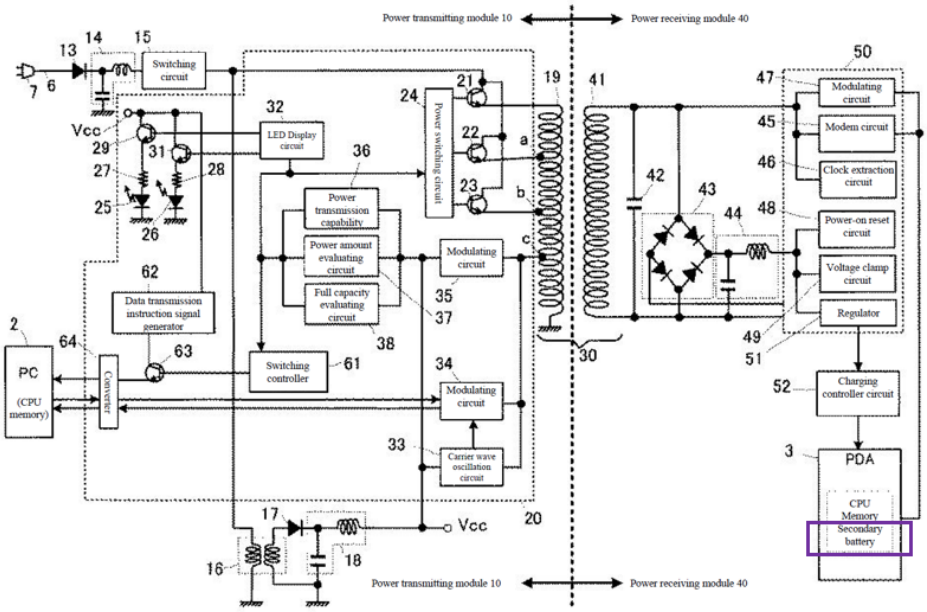

PRM40 in the portable device exemplifies an "**inductive receiver unit**" including coil 41 (**orange**) ("**receiver coil**") (Ex.1005, ¶0040) and a "**receiver circuit**" (*e.g.*, **red** below), including at least rectifier 43 (**blue**), clock/modulating circuits 46/47, and possibly include other PRM40 component(s) (other than the **battery**) (*e.g.*, 42,

44-45, 48-49, 51, and/or 52). (Ex.1005, ¶0047; Ex.1002, ¶128.).)[6]

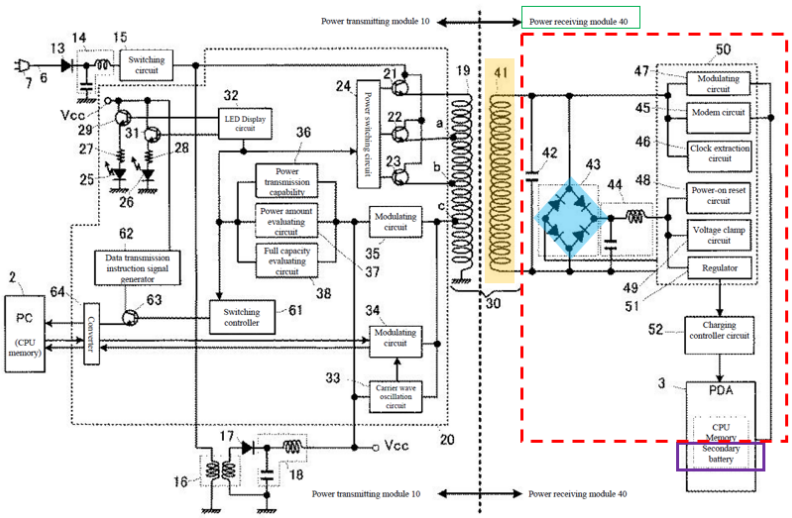

c) [1(c)]

Okada in view of *Odendaal* discloses/suggests this limitation. (Ex.1002, ¶¶129-147.)

Okada's "**system**" includes "**a first primary coil**" 19. (§§IX.A.1(a)-(b); *e.g.*, Ex.1005, FIG. 2 (**blue** below), ¶¶0040, 0050, FIG. 7, ¶¶0095-0107, FIGS. 9-10, ¶¶0116-119, FIGS. 11(a)-(b), ¶0121, FIGS. 12(a)-(b), ¶¶0123-0125, FIG. 13, ¶0132; Ex.1002, ¶130.)

[6] The annotated figures provided herein are exemplary visual aids and are not limiting.

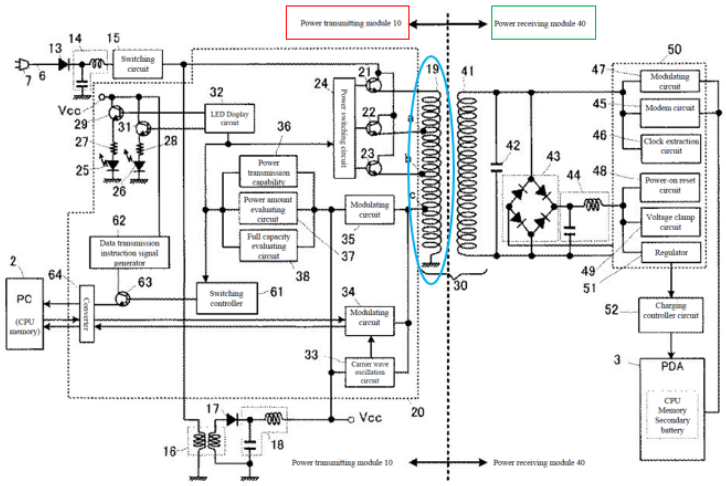

Controlled switches 21/22/23 allows primary coil 19 to **inductively provide** selected **power** to PDA3 via coil 41. (Ex.1002, ¶131; §IX.A.1(a); Ex.1005, FIG. 3, ¶¶0035, 0040, 0051, 0057, 0069-0073.)

As exemplified below, "**primary coil**" 19 (**orange**) is positioned "**substantially parallel to a surface of the system**" (**blue**/**red**). (Ex.1005, FIGS. 11(b) (left), 13(b) (right); §§IX.A.1(a)-(b).) Other exemplary system/apparatus configurations (above) have a similar arrangement. (Ex.1002, ¶132.)

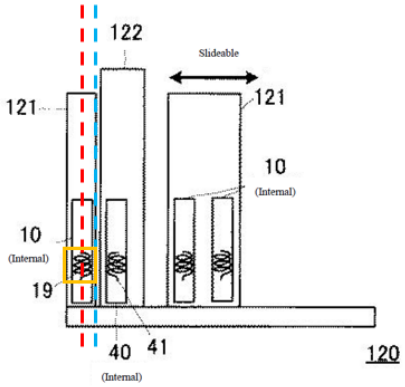

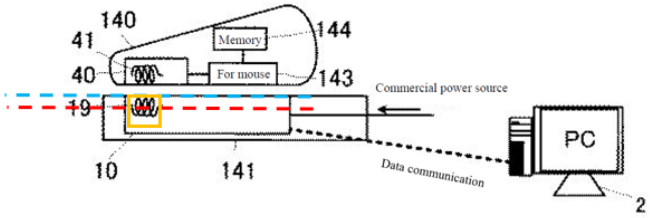

While *Okada* does not expressly state that the "**first primary coil…is *substantially planar* and substantially parallel to a surface of the system**," a POSITA would have found it obvious to configure *Okada*'s system to implement/use a planar primary coil (and secondary coil) in light of *Odendaal*. (Ex.1002, ¶133.)

Planar coils positioned parallel to a power transfer system's surface were known. (Ex.1002, ¶¶134-138; Ex.1027, 1-3; Ex.1015, FIGS. 1-2, 3-4, 7-12, Abstract, 1:5-2:29, 2:64-3:27, 3:39-51, 5:5-47, 5:48-9:5; Ex.1047, FIGS. 1-3, 6, 8A-9, ¶¶0002, 0006-0007, 0018-0034; Ex.1025, FIGS. 1, 3, 8-9, 13, 1:10-3:2, 4:19-32, 7:25-9:28, 12:27-32, 14:4-17; Ex.1026, FIGS. 1-2, 5, 9A-9C, Abstract, 1:3-9:4, 11:4-15; Ex.1009, Abstract, FIGS. 1-3, 1:4-2:26, 2:47-3:39, 4:18-60; Ex.1024, FIGS. 3, 8-9, 1:12-15, 1:39-2:29, 9:41-53, 10:45-57, 11:60-13:4; Ex.1028, Abstract, FIGS. 2-7, ¶¶0001, 0004-0007, 0025-0032, 0041; Ex.1029, 1-4, 9-19; Ex.1030, FIGS. 3-7B, 1:5-9, 1:59-61, 3:19-56, 4:62-67, 5:25-44; Ex.1036, Abstract, 2:22-3:6 ("primary winding…***substantially parallel*** to…charging surface"), 5:22, 11:18, 23:20-24:8, 24:19-22.)

Aware of such coil designs (and associated tradeoffs, *e.g.*, size/weight/cost/performance), a POSITA would have been motivated to consider relevant teachings (*Odendaal*) when configuring/implementing systems like *Okada*. (Ex.1002, ¶139; Ex.1047, ¶0033.)

Odendaal discloses inductive power transfer technologies/techniques, and like *Okada*, is in the same technical field as the '371 patent and discloses features reasonable pertinent to problem(s) the inventor/'371 patent (and a POSITA) was trying to solve. (§IX.A.1(a) (*Okada*); Ex.1008, Abstract, FIGS. 1A-4, 11-12, 1:5-3:57, 4:50-5:8, 5:24-28, 6:59-64; Ex.1001, Abstract, 1:54-5:17.) Such teachings thus would have been consulted in context of *Okada*. (Ex.1002, ¶¶140-141.)

Odendaal discloses known **planar-type inductor coils** (resonators) for inductive power transfer, (Ex.1008, FIGS. 1A-1B, 2A, 2C, 8E, 1:58-2:43; *id.*, 2:55-64 ("spiral-shaped conductor may comprise **pcb**…conductors"). The planar resonator includes spirals to transfer energy across the "interface-of-energy-transfer" (IOET) "in…***magnetic form***,…" to wirelessly charge a cellphone battery (*id.*, 1:60-67, 2:1-7, 2:55-64, 7-10, 2:65-3:5, 4:44-5:8, 6:1-18.) *Odendaal*'s teachings of "**planar**" coils is consistent with that known in the art. (Ex.1002, ¶¶35-53, 142-143; Ex.1008, 1:60-67, 2:19-21, 2:29-44, 3:65-67.) Consistent *Okada*'s thin-form applications/configurations (e.g., charging pads/case), *Odendaal* discloses the coils are "integrated into a **planar (flat/thin) structure**" (Ex.1008, 3:3-5) and conform to the housing surface to facilitate charging a device "in close proximity" (*id.*, 2:29-44) (coils parallel to system's surface). (Ex.1002, ¶¶143-144.)

Thus, a POSITA would have been motivated, and found obvious, to modify the *Okada* system to use a "**primary coil**" that is **"substantially planar and**

substantially parallel to a surface of the system" (and accompanied such design with corresponding planar secondary coil(s) in the portable device) to expand/complement *Okada*'s thin-form configurations/applications. (Ex.1002, ¶145; §§IX.A.1(a)-(b).) Such modification would have provided options to reduce the volume the coil(s) occupy, system/device size/weight, and expanded/enhanced *Okada*'s charging applications. (*Id.*; Ex.1005, FIGS. 1, 9, 10-16, ¶¶33-34, 0116-0146.) Reducing distance between primary-secondary coils would have promoted close-proximity coupling, improving power transmission efficiency, reducing energy waste, and shortening charging time. (Ex.1002, ¶¶145-146; Ex.1008, 2:29-44; Ex.1005, ¶¶0066-0068, 0112, FIGS. 4(a)-4(b); Ex.1036, 24:19-22; §IX.A.1(d)(2).)

With such knowledge/skills, a POSITA would have considered design tradeoffs and techniques/technologies to implement the above-modification with a reasonable expectation of success. Especially since it would have involved known technologies/techniques (*e.g.*, planar coils) that would have predictable led to, *e.g.*, thinner charger units, as contemplated by *Okada-Odendaal*. (Ex.1002, ¶147; §IX.A.1(a)) *KSR Int'l Co. v. Teleflex, Inc.*, 550 U.S. 398, 416 (2007).

d) [1(d)]

Okada-Odendaal and *Kook* discloses/suggests this limitation. (Ex.1002, ¶¶148-177.)

(1) [1(d)(1)]

Switching circuit 15 in PTM10 generates a switching pulse signal supplied to primary coil 19 via a MOSFET switch 21/22/23 ("**FET switch**") selected by switching circuit 24. (Ex.1005, ¶0049; Ex.1002, ¶¶148-164.) The signal is also converted (via circuits 16-18) to V_{CC} for powering PTM10 components. (§IX.A.1(a); Ex.1005, ¶¶0038-0040, 0046-0051, FIG. 2; Ex.1002, ¶¶149-150.) Circuits 16-18 provide power to other components, *e.g.*, circuit 33, which outputs signals driving coil 19 to send a carrier wave signal to PRM40. (Ex.1005, ¶¶0062-0063, ¶¶0010-0014, 0042-0046, 0055-0058, Claims 2-3, 6; §§IX.A.1(d)(3), IX.A.1(f)-(g).) Circuit 15 provides its signal to a switch 21/22/23, and with circuit 24, provides signals driving coil 19 to transfer power. (*Id.*; Ex.1005, ¶¶0040, 0049-0051, 0070-0073; Ex. 1002, ¶150.)

Okada's exemplary "**first drive circuit**" includes: **(1)** switching circuit 15 (including as modified below) and circuits 21-24, **(2)** same with circuits 16-18 (providing Vcc for IC 20, including circuit 24 (controlling FETs 21/22/23)), **(3)** same with circuit 33 (driving coil 19 to send carrier wave to PRM40), or **(4)** a combination of such components (with/without other circuitry in IC 20). (Ex.1005, FIG. 2 (annotated below (**pink**)).) The "**first drive circuit**" includes an "**FET driver**"

(*e.g.,* switch 15, circuit 24, and/or one or more of circuits 16-18, or a combination of such components) and "**a FET switch**" (*e.g.*, switch 21/22/23). (Ex.1002, ¶151.)[7] These components forming the "**first drive circuit**" are coupled to rectifier/smoothing circuits 13/14 (providing a "DC voltage") (Ex.1005, FIG. 2, ¶0038, FIG. 17, 0148-0149 (battery 181 input)) thus coupled to a "**DC voltage input**" and also (directly/indirectly) coupled to coil 19 ("**first primary coil**") (Ex.1005, FIG. 2, ¶¶0039-0049; Ex.1002, ¶151).

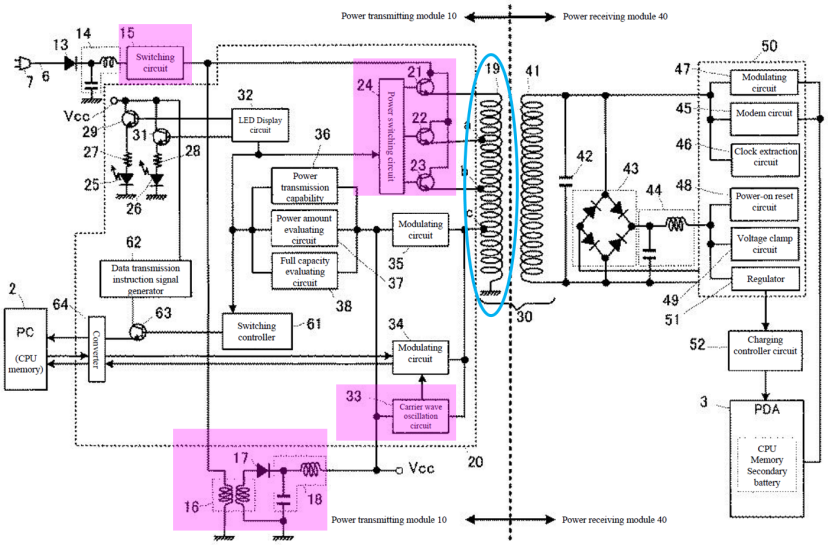

[7] *Okada*'s circuitry is similar to drive circuitry in the '371 patent. (§IX.A.1(a); Ex. 1001, 22:45-49, 24:3-4, 41:38-47, 44:5-6.) (Ex.1002, ¶151.)

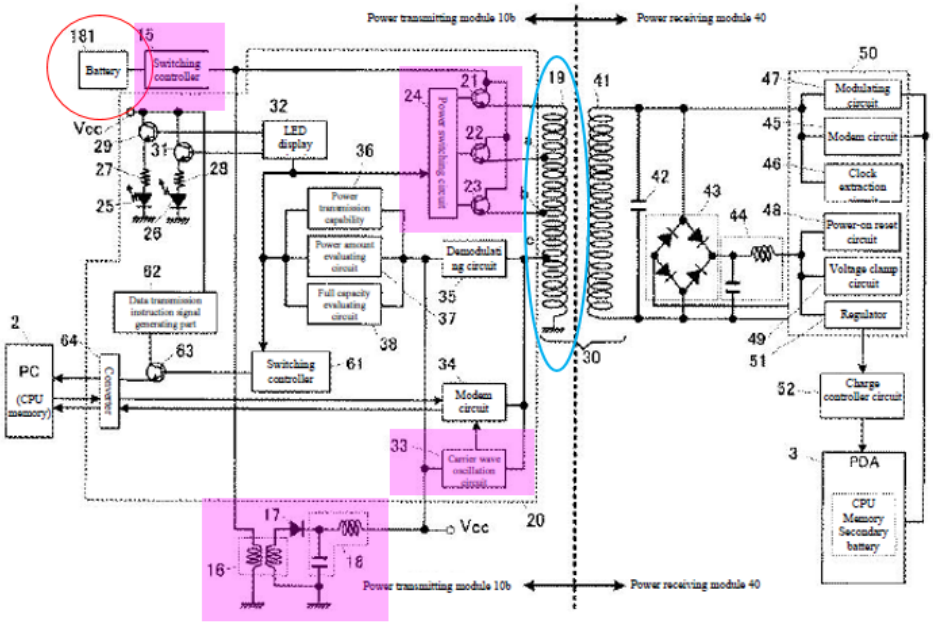

While *Okada* does not expressly disclose the drive circuit(s) having a "**capacitor,**" it would have been obvious to modify the *Okada-Odendaal* system to include such features in light of *Kook*. (Ex.1002, ¶¶57-65, 152.) A POSITA would have consulted *Kook* at least because it is in the same technical field as the '371 patent and *Okada*, and reasonably pertinent to problem(s) the inventor/'371 patent (and POSITA) was trying to solve. (*Id.*; Ex.1001, Abstract, 1:54-5:16; §§IX.A.1(a)-(c); Ex.1059, Abstract, ¶¶0009, 0035, 0041, 0049.) (Ex.1002, ¶¶89-94, 152.)

Kook discloses "a non-contact charger" for "charging battery-pack of a mobile device." (Ex.1059, Abstract, ¶¶0001, 0006, 0037-0042.) Charger 1 (blue below) receives power from computer 100 to power/charge mobile device 300 having a battery pack 200/battery 230 (yellow), via primary coil 70/secondary coil 80 (orange). (Ex.1059, ¶¶0015, 0032, 0036-0037, FIG. 1 (below).) Ex.1002, ¶153.)

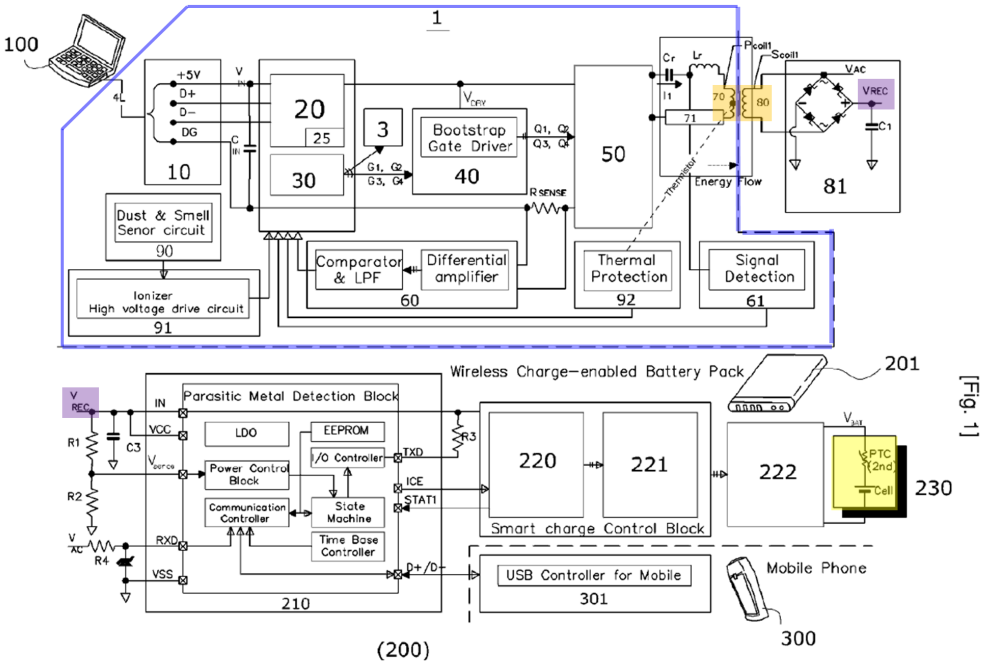

[Fig. 1]

MPU 30 controls charger 1's "internal elements" (Ex.1059, ¶0041), and includes gate drive block 40 (magenta below) and serial resonator converter 50 (*e.g.*, LLC full/half-wave type serial resonator converter (green)), a "**C-L resonator**" (red), and current sensing block 60 (blue). (*Id.*, ¶¶0032-0035, 0041; Ex.1002, ¶154.)

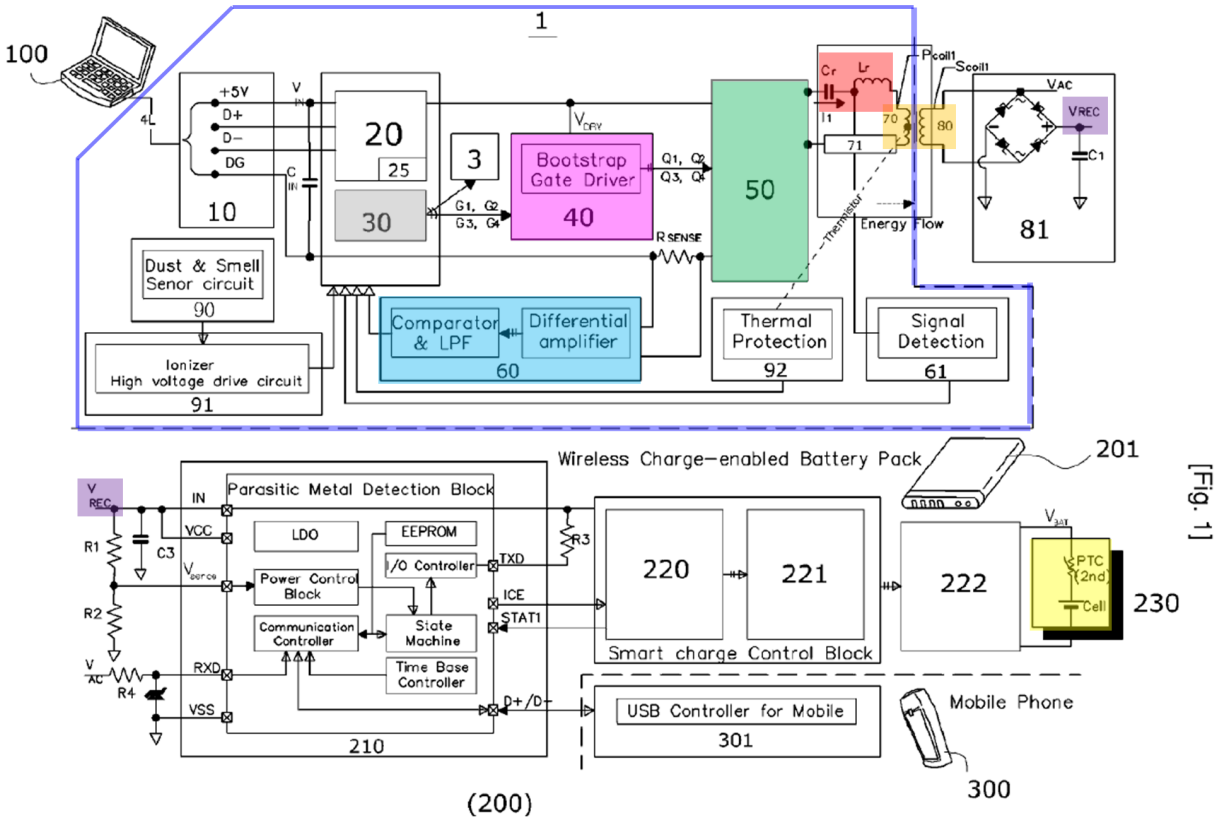

[Fig. 1]

The "C-L resonator" coupled to primary coil 70, including "**capacitor**" Cr "induce[s] LC resonance," "make[s] an electric current into a sine wave and transmit[s] an electric power to the secondary side by means of the inductive coupling." (Ex.1059, ¶¶0041, 0049, FIG. 1; Ex.1002, ¶155.) Consistent with contemporaneous knowledge and *Kook*, a POSITA would have understood such a capacitor-based circuit allows the coil to transmit less-distorted and efficient signals (*e.g.,* sine wave) with reduced harmonics. (Ex.1002, ¶¶57-65, 155.) Indeed, capacitor-based circuits (as in *Kook*) was known to improve signal transmissions (*e.g.*, minimizing/reducing unwanted radiations and heat issues caused by

harmonics, etc.) (Ex.1002, ¶¶155-157; Ex.1016, 631, 641, 798, ("**blocks out…harmonics**"); Ex.1013, (capacitor/switches reducing harmonics from primary coil), FIGS. 3 (below), 6, 3:29-4:5, 4:19-5:7, 7:24-8:14, 8:17-23, 24-31, 9:26-12:27); Ex.1008, 2:16-19; Ex.1001, 22:13-30 (harmonics are "undesirable").)

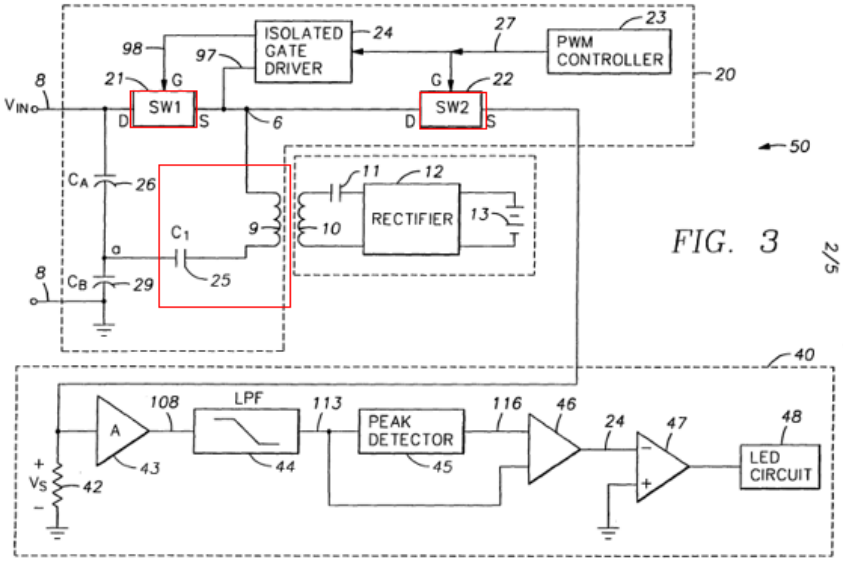

(*See also* Ex.1012, FIGS. 2, 5, 8, 3:30-62, 8:47-9:51; Ex.1014, 62-68; Ex.1015, FIGS. 1-2, 5-12, Abstract, 1:55-2:10, 3:28-51, 4:22-44, 5:45-6:4; Ex.1020, Abstract; Ex.1021, ¶¶00164-0165; Ex.1029, 22-25; Ex.1002, ¶¶155-157.)

Based on such teachings/knowledge, a POSITA would have been motivated to consider/implement a capacitor with the "**drive circuit**" in the modified *Okada-Odendaal* system to improve power transmission. (*Id.*; Ex.1002, ¶158.) A POSITA would have had the skill/rationale and expectation of success to configure/implement such modification, especially given the known use of, and

benefits from, capacitor-based filter circuits to enhance the transmission efficiency in inductive power transfer systems. (Ex.1002, ¶¶57-65, 158.) A POSITA would appreciated that, *e.g.*, a capacitor-based circuit/filter positioned between switches 21/22/23 and primary coil 19, or between circuit 15 and switches 21/22/23, (each part of "**drive circuit**") would have achieved such benefits (*e.g.*, reduced harmonics). (*Id.*, ¶158.)

A POSITA would have also recognized other advantages/benefits from *Kook*'s teachings in context of *Okada* (relevant to features in *e.g.*, limitations 1(d)(3), 1(l), discussed below (§§IX.A.1(d)(3), IX.A.1(l)). While capable of adjusting power levels based on device power requirements at the **onset** of a charging process, *Okada* does not expressly indicate controlling power levels **during** charging. (Ex.1005, ¶¶0069-0076, FIG. 3.) However *Kook*'s teachings would have motivated a POSITA to modify the *Okada-Odendaal* system to include such features. (Ex.1002, ¶159.)

Kook describes feedback-controlled functionalities to adjust a charger circuit's operating frequency, to control charging power/voltage to the portable device **during** charge/power transfer. (Ex.1002, ¶160.) *Kook* discloses current sensing block 60 for "stably controlling an electric power through a current **feedback** using an automatic variation algorithm of **primary** frequency so as…to control a voltage of a **secondary** rectification terminal in the charging battery-pack 200." (*Id.*, ¶¶0041, FIG. 1.) Block 60 analyzes "a signal of the secondary coil 80 to

recognize the mobile device 300, monitor the primary coil 70 and the secondary coil 80 to control a charge voltage to a stable voltage." (*Id*., ¶¶0033, 0047, 0083; Ex.1002, ¶160.)

A POSITA would have understood that resonator converter 50 includes switching FETs and a capacitor. (Ex.1002, ¶161.) *Kook* describes "bootstrap ***gate*** drive block 40" providing four signals Q1-Q4 to serial resonator converter 50. (Ex.1059, FIG. 1, ¶¶0009, 0032-0035, 0041.) Such signals necessarily control corresponding "**gates**" of associated **FET** switches in converter 50 since only FET switches have "gate(s)" (unlike a BJT) and *Kook* discusses "switching" in relation to converter 50. (Ex.1002, ¶161; Ex.1059, ¶¶0049, 0075.) The "LLC" serial resonator converter (Ex.1059, ¶¶0009, 0041, 0033, 0064) discloses a **capacitor** ("C") with inductors ("LL"). (Ex.1002, ¶161.)

In light of such teachings/suggestions, a POSITA would have been further motivated, and found obvious, to configure the above-modified *Okada* system such that the switching circuit 15 and/or other components (part of the "**drive circuit**") to implement an "**FET driver**," "**FET switch**," and a "**capacitor**" coupled to the primary coil of the "**system**," similar to teachings from *Kook*, to improve/enhance power transmission control during charging, by adjusting the switching/operating frequency of the primary circuitry in response to current feedback information, while providing efficient power transfer via capacitive filtering. (Ex.1002, ¶162.) A

POSITA would have appreciated *Kook*'s guidance, describing a closed-loop feedback arrangement, where powering/charging is controlled through current feedback by varying the primary-side circuit operating frequency using FET driver/switch/capacitor-based circuitry.[8] (*Id.*, ¶162; Ex.1059, ¶¶0033, 0041, 0047, 0083.)

Such a configuration would have improved/complimented the *Okada-Odendaal* system, which also uses device information to control/adjust power delivery in a closed-loop feedback fashion, but does so at the onset of charging, not during charging. (Ex.1005, ¶¶0069-0076, FIG. 3; §§IX.A.1(a)-(c).) Implementing such features would have provided a stabilized voltage for the battery/mobile device, for controlled/efficient power transfer/consumption during charging. (Ex.1002, ¶163.)

A POSITA would have had the skill/rationale and expectation of success to achieve such modifications, especially since the use of capacitor(s) and closed-loop feedback power delivery control technologies/techniques was known (*e.g.*,

[8] A POSITA would have appreciated configuring the "drive circuit" in the modified *Okada* system to use "FET switches/FET driver"-circuitry with the modified switching circuit 15 to accommodate frequency adjustment features discussed above. (Ex.1002, ¶162.)

Okada/Kook). (Ex.1002, ¶164.) Applying such known technologies/techniques (*e.g.*, FET-based drive circuitry in closed-loop feedback system with capacitive filtering) would have predictably led to the modified system ensuring sufficient power is available to charge portable device with energy-efficient continuous power transfer with reduced heat waste and signal distortion. (Ex.1002, ¶164.) *KSR* at 416-18.

There were various ways for a POSITA to implement such modifications. (Ex.1002, ¶165.) For example, in addition to an appropriately designed/positioned capacitor-based circuit/filter (*supra*), a POSITA would have been motivated to configure/leverage features/components in *Okada*'s system used to receive/pass/process device information for controlling power transfer (*e.g.*, demodulator 35, circuits 36-38 (Ex.1005, ¶0064; §§IX.A.1(e)-(m)). (Ex.1005, ¶0064; *infra* §§IX.A.1(e)-(m)). (Ex.1002, ¶165.) A POSITA would have recognized/appreciated the benefits of configuring the system to receive current feedback information/signals (*e.g.,* via demodulator 35, circuit(s) 36/37/38), modified switching circuit 15) to vary the operating frequency of the "drive circuit"

to control a voltage output by rectifier circuitry 43 in PRM40 used to charge/power the battery. (Ex.1002, ¶165; *infra* §§IX.A.1(e)-(m).)[9]

(2) [1(d)(2)]

The *Okada-Odendaal-Kook* combination discloses/suggests this limitation. (Ex.1002, ¶¶166-171; §§IX.A.1(a)-(d)(1).)

As discussed, the *Okada-Odendaal-Kook* system includes a "**drive circuit**" (with FET driver, FET switch, capacitor) having current-based closed-loop feedback control to adjust the power/voltage used to charge the portable device battery by adjusting operating frequency on the primary side. (§IX.A.1(d)(1).) In light of *Kook-Okada,* a POSITA would have understood such drive circuit, during operation, would have provided an alternating electrical current to coil 19 at an "**operating frequency and duty cycle**," consistent with *Kook*'s teachings. (Ex.1002, ¶167; Ex.1059, ¶¶0041, 0047, 0083 ("AC current"); §IX.A.1(d)(1); Ex.1005, ¶¶0110-0111.)

A POSITA would have also understood that the ac signal applied to the modified *Okada* system's planar primary coil(s) would have generated a "**substantially perpendicular**" "**alternating magnetic field**", as a natural result of

[9] Other successful designs/configurations would have been contemplated to achieve the same functionalities. (Ex.1002, ¶165.)

activating the planar coil to inductively transfer power to PDA3 as described by *Okada-Odendaal-Kook*. (Ex.1002, ¶¶¶¶35-53, 168-171; Ex.1005, ¶¶0035, 0051, 0056, 0063-0066, 0121-0132, FIGS. 11(b)/13(b); Ex.1059, ¶¶0032-0042; §IX.A.1(c); Ex.1011, 557-562, 593-594, 601; Ex.1009, 2:62-3:8, 1:54-2:18, 3:20-4:11, FIGS. 1-3; Ex.1010, FIGS. 1-10, 7:21-10:22, 11:27-14:67; Ex.1029, 3-4, 27-50); Ex.1019, FIG. 2B, ¶¶0027, 0064.)

A POSITA would thus have understood the planar primary coils in the *Okada-Odendaal-Kook* system, when inductively providing power via planar coils 19/41 (§IX.A.1(c)), would have likewise generated a magnetic field substantially perpendicular to the plane of coil 19 and the system's surface. (Ex.1002, ¶¶35-53, 168-171; §IX.A.1(c); Ex.1011, 558, 559 ("magnetic field…perpendicular to the plane of [wire] loop"), 562-564, 592; Ex.1048, Abstract, FIGS. 1-6, 1:28-2:4, 2:27-3:14, 4:11-24, 5:23-6:15, claims 1-88; Ex.1049, Abstract, FIGS. 1, 5-6, 9, 11-12, 24-26, ¶¶0008-0010, 0044-0051, 0065-0066; Ex.1050, Abstract, FIGS. 1-5, 9A-9C, 5:22-6:45, 11:22-33, 12:28-38, 16:25-18:3.)

(3) [1(d)(3)]

The *Okada-Odendaal-Kook* combination discloses/suggests this limitation. (Ex.1002, ¶¶172-177.)

Consistent with that discussed above (§§IX.A.1(d)(1)-(2)), a POSITA would have been motivated, and found obvious, to configure the modified system's "**drive**

circuit" to provide a sine-wave-type signal to coil 19 coupled to a resonating circuit (*e.g.*, C-L circuit), based on circuitry/techniques consistent with those taught by *Kook*, *e.g.*, a serial resonator converter type circuitry that "induce[s] **LC resonance**" to provide "a sine wave" to a primary coil coupled to a "**C-L resonator**." (§IX.A.1(d)(1); Ex.1059, ¶¶0032-0035, 0047, 0055, 0081.) *Kook* describes the "**switching frequency** [may be] set to a higher level than the **resonant frequency**" (Ex.1059, ¶0049) and that "resonator converter 50…may operate at a lower **switching frequency** than a **resonance frequency**" to reduce "switching loss of the [secondary rectifier] diodes." (*Id.*, ¶0075.)

A POSITA would have understood that the *Kook*'s resonant frequency is that of a circuit including at least the primary coil and associated capacitor, *e.g.*, Cr of C-L resonator and/or capacitor of [LLC full-bridge] serial resonator converter 50 ("**a resonance frequency of a circuit comprising the first primary coil and the capacitor**") as *Kook* discloses transmitting power from the primary coil using the resonance converter to "induce **LC resonance**." (Ex.1002, ¶173; Ex.1059, ¶0049.) The above-modified *Okada* system (implementing resonance C-L circuitry and frequency-based switching operations (§§IX.A.1(d)(1)-(2)) would have been configured to provide similar features for reasons explained in context of *Kook*. (*Id.*; Ex.1002, ¶173.)

Likewise, consistent with *Kook*, a POSITA would have been motivated, and

found obvious, to configure the above modified "**drive circuit**" to apply a current to coil 19 at an operating frequency "**within a range of frequencies**" that are "**near**" the "**resonance frequency**" set by the above-discussed resonance circuit (L-C circuit) in the modified system to effectively filter unwanted harmonics (*Supra*; §§IX.A.1(d)(1)-(2); Ex.1002, ¶174.)

Consistent with such teachings/knowledge, a POSITA would have designed/configured the L-C circuit in the modified *Okada* system to filter signals having frequencies higher than the resonance frequency (relating to unwanted harmonics). (Ex.1002, ¶¶57-65, 175.) A POSITA would have understood as a natural result of the operating frequency provided by the modified "driver circuit" being increased (including the operating frequency adjustment discussed above (§§IX.A.1(d)(1)-(2)) and within the range of frequencies that would produce a sine wave signal or "near" the resonance frequency noted above), at least some of the fundamental sine wave signal (non-harmonics signal) would be filtered by the LC circuit, causing a signal having reduced strength (in terms of its voltage/current, due to increased impedance) being transmitted to the portable device's receiver circuit (§IX.A.1(b)). (*Supra*; Ex.1002, ¶175; Ex.1008, 5:33-55.)

Thus, the output signal induced at the output of "receiver circuit" (provided to portable device battery) in modified *Okada* would have a corresponding lower voltage/current, consistent with that recited in part "**(ii)**" of limitation 1(d)(3).

(Ex.1002, ¶175; §IX.A.1(b).) A POSITA would have therefore been motivated, and found obvious, to configure the *Okada-Odendaal-Kook* system to implement closed-loop feedback-controlled frequency-switching power delivery (consistent with above and limitation 1(d)) based on device information to provide appropriate power to accommodate changes in PDA3's load during power/charging operations. (§§IX.A.1(a)-IX.A.1(d)(2); *supra*; Ex.1002, ¶175.)

The modified *Okada-Odendaal-Kook* system (and its "**drive circuit**") likewise would have been configured (and thus discloses/suggests) operating within the above-described range of frequencies that result in wirelessly powering/charging of the device's battery. (Ex.1002, ¶176.) As discussed, *Okada-Odendaal-Kook* would have been configured to improve power transmission control by adjusting the switching/operating frequency of primary-side circuitry, *e.g.*, including the "dri**ve circuit**" with modified switching circuit 15, while providing efficient power transfer via capacitive filtering during powering/charging of the battery. (§§IX.A.1(d)(1)-(2), IX.A.1(a)-(c).)

The switching signal provided by circuit 15 is converted to a V_{CC} to power PTM10 components (*e.g.*, circuit 33, which generates "a…carrier wave at a certain interval" for PRM40). (Ex.1005, ¶¶0039, 0056-0057; §§IX.A.1(a)-(b), IX.A.1(d)(1).) A DC signal "generated by a carrier wave…can be **used as a driving power source**" for circuits 46/47 in PRM40's "**receiver circuit**." (Ex.1005, ¶0058;

§IX.A.1(b).) During power transmission, the carrier wave is periodically transmitted to PRM40 to generate/send back device information that PTM10 uses to determine whether PDA3 is present/properly positioned. (Ex.1005, FIG. 3, ¶¶0074-0075.) Only then does PDA3 receive power until fully charged—determined using the "periodically transmitted" carrier wave. (Ex.1005, FIG. 3, ¶¶0074-0076.) For reasons explained, a POSITA would have been motivated to configure the above-modified *Okada-Odendaal-Kook* system to include similar features to "**allow activation and powering of the receiver unit and charging the battery of the portable device**." (Ex.1002, ¶177.)

e) [1(e)]

The *Okada-Odendaal-Kook* combination discloses/suggests this limitation. (Ex.1002, ¶¶178-186; §§IX.A.1(a)-(d).)

Limitation 1(g) below (§IX.A.1(g)) recites "detect, **through the first sense circuit**…information in the **current modulation** in…primary coil").) As explained, the carrier wave sent to PRM40 results in a modulated signal including device information being generated/transmitted back to PTM10 via coils 41/19. Circuit 35 "**demodulates modulated** signals included with the voltage from" coil 19, which is evaluated by circuits 36/37/38 according to *Okada*'s power transfer operations. (Ex.1005, FIG. 3, ¶¶0042, 0060-0077.) Thus, circuit 35 discloses a "**first sense**

circuit" given it senses/receives/demodulates a modulated response signal from PRM40 via coil 19. (Ex.1005, FIG. 2, ¶¶0050, 0064, 0069, 0076; Ex.1002, ¶179.)

Okada's teachings are also consistent with PO's litigation assertions, which points to a demodulator or the like for the claimed "**sense circuit**." (Ex.1018, 25-26 ("**demodulation** circuitry"), 27 ("**demodulation** filter"), 29 ("a **demodulator**").)[10]

Okada explains that the modulation method may be based on "periodic intensity modulation of a carrier wave and may use a phase modulation method to express 0/1 information via phase change information of a signal." (Ex.1005, ¶0058.) To the extent that *Okada-Odendaal-Kook* does not disclose "a first sense circuit to **monitor current flow** through the first primary coil during operation of the first drive circuit, wherein the first sense circuit…[detects] a signal corresponding to **a current modulation in the first primary coil induced by modulation of current in the receiver coil**," a POSITA would have found it obvious to implement such features. (Ex.1002, ¶180.)

Modulating/demodulating a waveform (as discussed in *Okada*) and sensing communications based on monitoring an inherent property of the waveform (*e.g.*, current) to detect/sense/process information contained therein during charging

[10] Petitioner does not concede any feature in the accused instrumentalities meet this/any claim limitation.

operations (operation of the drive circuit) would have been one of "a finite number of identified, predictable solutions" for including/encoding/decoding information from the portable device in the modified system, *e.g.*, information used to confirm power reception equipment, full charge, and/or power level used to verify presence/alignment of coils, consistent with that disclosed by *Okada*. (Ex.1002, 181; Ex.1005, ¶¶0056-0057, 0062-0064.) *KSR* at 421.

A POSITA would have been motivated to configure the modified *Okada* system to provide current modulation/demodulation-type techniques/technologies (including current sense circuit(s) that monitor current flow in primary coil 19) to facilitate the communication of information from the secondary side coil, consistent with that known in the art. (Ex.1002, ¶181; Ex.1056, Abstract, 2:7-9, 2:38-44, 4:21-34, 5:12-14, 6:12-33; Ex.1057, 9:20-24, 15:16-21, 21:21-22:3, FIGS. 1-3, 11-13; Ex.1058, Abstract, FIGS. 1, 3A-8, 3:25-4:35, 5:27-7:23, 10:22-24, 10:25-12:17; *infra* §IX.A.1(g).) (*See also* Ex.1001, 24:32-45; Ex.1063.)

Okada describes verifying PDA3's presence by measuring intensity of the signal(s) from primary coil(s) 19 and secondary coil 12. (Ex.1005, FIGS. 4(a)-4(b), ¶¶0066-0068, 0074-0076, FIG. 8 (current sensor 91), 0110 ("**current measuring sensor**"), 0111.) A POSITA would have found it obvious to configure/implement such current sensing/detecting/modulation/demodulation features in the *Okada-Odendaal-Kook* system for detecting communications of the modulated information

signal from coil 19 (detected as current corresponding to current modulation in coil 19 induced from the current modulation via coil 41) so that it is timely/properly detected/demodulated/used to verify that PDA3 is "placed in a correct position" and "capable of data transmission and reception." (*Id.*, ¶0080, FIGS. 3, 8, 4(a)-4(b), ¶¶0081-0082; Ex.1002, ¶182.) A POSITA would have been motivated to implement such a modification in light of *Okada*'s teachings, *e.g.*, using signal intensity and sensed current in coil 19 for determining/verifying PDA3 presence, and state-of-art knowledge (*supra*). A POSITA would have considered various ways of configuring the modification, *e.g.*, configuring the "sense circuit(s)" associated with current sensors 91, demodulation circuit 35, and/or other components to allow PTM10 to monitor the current flow through coil(s) 19 to sense/detect communications from PRM40 via coil 41, consistent with known current modulation/demodulation techniques as explained. (Ex.1002, ¶182.)

A POSITA would have had the requisite skills and rationale to design/implement such "**sense circuit…**" and related current modulation/demodulation-type features in the *Okada-Odendaal-Kook* system, and done so with a reasonable expectation of success given *Okada*'s teachings and POSITA's contemporaneous knowledge. (Ex.1002, ¶183.) Especially since such modification would have involved applying known technologies/techniques (*supra*) to predictable yield an inductive power transfer system that senses/detects

communications received by coil 19 via known current modulation/demodulation techniques in the *Okada-Odendaal-Kook* system. (Ex.1002, ¶183; §§IX.A.1(f)-(n).) *KSR*, 550 at 416.

While *Okada* does not expressly disclose "the first sense circuit includes **a low pass filter and an amplifier to *assist* in detecting and amplifying a signal**…," it would have been obvious to implement such features in view of *Kook*. (Ex.1002, ¶184.) *Kook* discloses that charger 1 includes **current sensing block 60** (blue in FIG. 1 below) that **monitors primary coil 70** to receive signals and associated information. (Ex.1059, ¶¶0008, 0010, 0032-0033, 0041-0045.)

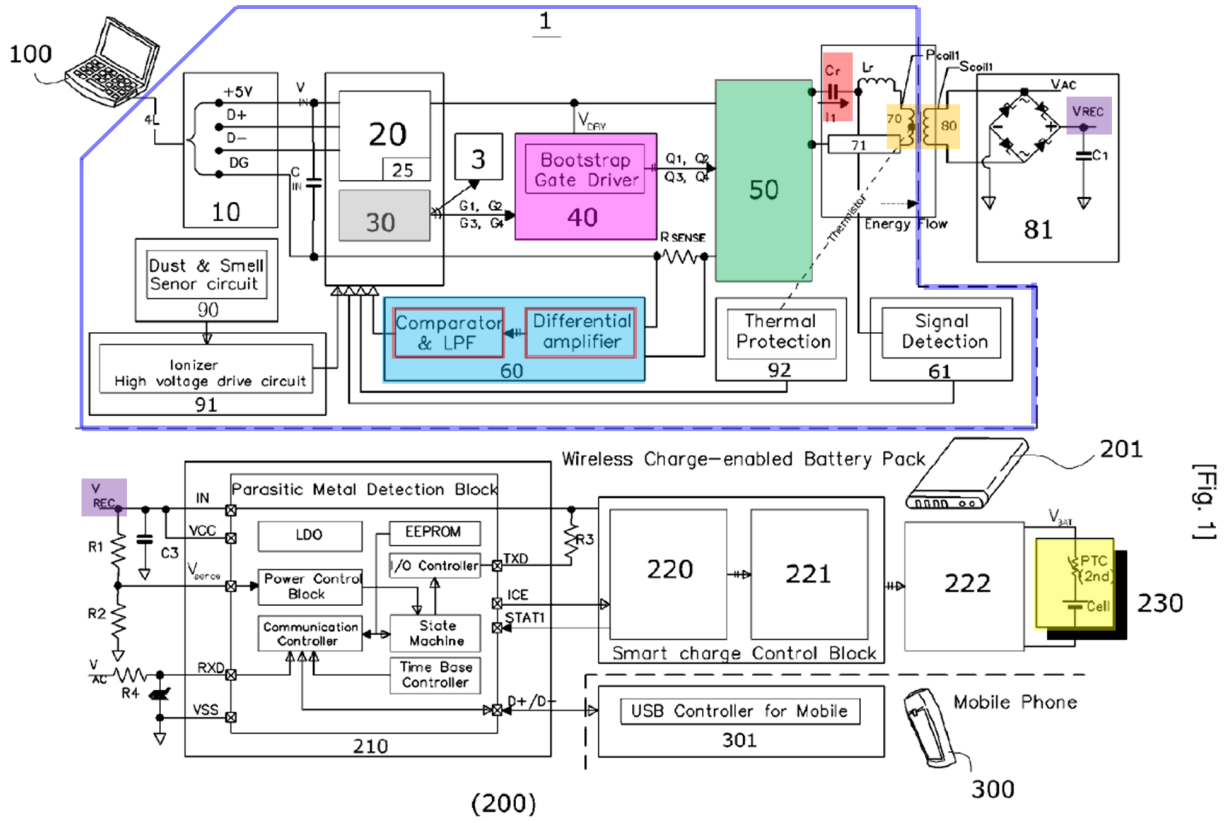

Current sensing block 60 includes a differential "**amplifier**" and a "LPF" ("**Low Pass Filter**" (red above)). A POSITA would have understood that that the "LPF" and "amplifier" would "**assist in detecting and amplifying a signal**" from a primary coil because it was known that an amplifier increases signal strength and a LPF reduces impacts of unwanted noise/distortion for optimizing signal detection/sensing. (Ex.1002, ¶184.)

Thus, a POSITA would have been motivated to configure the "sense circuit" in the modified *Okada* system (*e.g.*, circuit 35) to include amplifier/LPF circuitry to provide similar features like that suggested by *Kook*'s current sensing block 60 (*e.g.*, amplifying/filtering the signal received by circuit 35 to ensure proper/efficient demodulation of the current-modulated information signal(s) sent by coil 41 in the receiver circuit. (Ex.1002, ¶185.)

A POSITA would have had the requisite skills/rationale to design/implement such features in the above modified *Okada-Odendaal-Kook* system, and done so with a reasonable expectation of success given the teachings of *Okada-Kook* in context of a POSITA's contemporaneous knowledge. (Ex.1002, ¶186.) Especially since such modification would have involved applying known technologies/techniques (e.g., known signal enhancement/processing and filter technologies/techniques to predictably yield an inductive power transfer system having an optimized/improved sense circuit (through the use of known LPF and

amplifier (*Kook*)) for monitoring current flow through the primary coil in accordance with the above-modified *Okada-Odendaal-Kook* system. (*Supra*; §IX.A.1(d); Ex.1002, ¶186.) *KSR*, 550 at 416.

f) [1(f)]

The *Okada-Odendaal-Kook* combination discloses/suggests this limitation. (Ex.1002, ¶¶187-192.)

Circuit 33 provides a carrier wave to PRM40 causing responsive device information from PRM40's circuit 47 via coils 41-19 to be received/processed by demodulator 35. (§§IX.A.1(b), 1(d)(3)); Ex.1005, ¶¶56-57, 0062-0064.) Circuits 36-38 "perform various decision-making processes based on information included in the signal demodulated by…circuit 35." (Ex.1005, FIG. 2, ¶0042, FIG. 3, ¶¶0060-0077.) Those circuits control power transmission processes (FIG. 3) by providing signals to circuit 24 that controls/selects switches 21/22/23 (part of "**first drive circuit**"). (Ex.1005, FIG. 3, ¶¶0057-0076; §§IX.A.1(a), (d)(1).) Circuits 36-38 provide a signal to switching control 61 (Ex.1005, ¶0045) determining whether "data can be **transmitted and received**" (*id.*, ¶¶0081-0085) and whether PDA3's charge capacity exceeds a "minimum capacity" for it to transmit/receive data (*id.*, ¶¶0082-0089, FIG. 6). Circuits 36-38 control LEDs 25-26 that communicates charging status to a user. (*Id.*, ¶¶0041, 0053-0055, 0061, 0069-0072, 0077, FIG. 5; Ex.1002, ¶188.)

Thus, one or more circuits 36/37/38 disclose "**a communication and control circuit** [FIG. 2, **yellow** below]…**coupled to the first drive circuit** [*e.g.*, §IX.A.1(d)(1) pink] **and the first sense circuit** [§IX.A.1(e), 35 blue]" as claimed. (*Supra*; Ex.1002, ¶189; Ex.1005, FIG. 2; §§IX.A.1(g)-(n).) Other components may be included in such claimed "**communication and control circuit**," *e.g.*, switching controller 61, signal generator 62, controller 64, and/or "switching controller 73" in the multi-coil arrangement of FIG. 7 "system," (Ex.1005, FIG. 7 (**yellow** below), ¶¶0094-0115.)

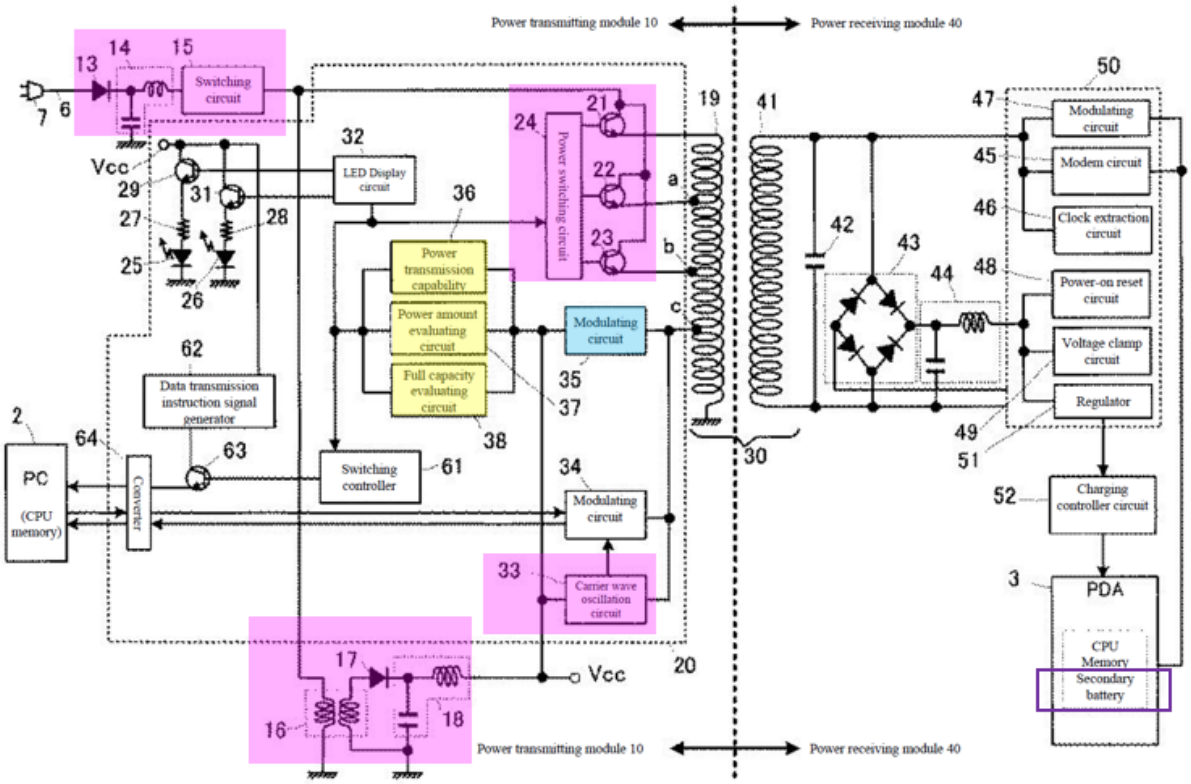

FIG. 7

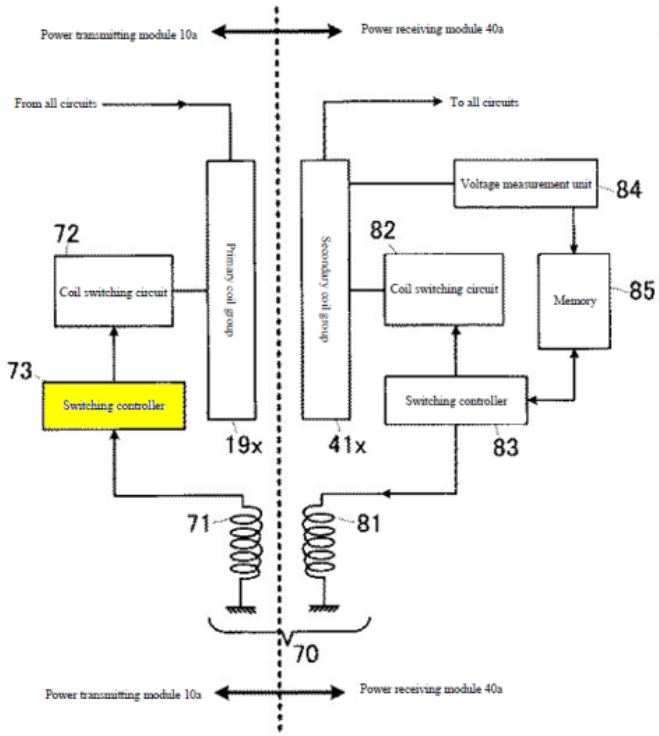

Such inter-relationships would have enabled the "**communication and control circuit**" implemented in the modified *Okada-Odendaal-Kook* system to perform various processes/functions discussed in limitations (g)-(n) discussed below. (Ex.1002, ¶190; §§IX.A.1(g)-(n).) A POSITA would have been motivated to configure the above-identified "**communication and control circuit**" in the *Okada-Odendaal-Kook* system to, *e.g.*, process the current feedback information received from demodulator 35 (including as modified in view of *Kook*) for controlling the operating frequency of the modified "**first drive circuit**" to control the voltage output of secondary rectification terminal during charging/powering operations, as explained. (§IX.A.1(d)(1); Ex.1002, ¶190.)

Circuits 33, 36-38 may be "configured on the same **IC chip**," *e.g.*, "**IC** 20," which includes other components like "controller" 61, 73. (Ex.1005, ¶¶0046, 0081-0084, FIGS. 2, 7.) Such circuitry would have been understood as compact integrated circuitry designed to perform/given certain operations in PTM10, which is consistent with a "**microcontroller**" as understood by a POSITA in context of the '371 patent. (Ex.1002, ¶191; Ex.1001, 24:32-45, 39:33-38 (exemplifying an "IC" or "chip" as a "microcontroller").) "[S]witching controller 73" is likewise part of such "**communication and control circuit**" since it sends "instructions" to control the switching to select specific primary coils. (Ex.1005, ¶¶0095, 0101.)

To the extent it is argued/determined the claimed "microcontroller" requires a processor or similar features not disclosed by *Okada*, it would have been obvious to configure PTM10 in *Okada-Odendaal-Kook* to include such features because it would have been a foreseeable application of known technologies/techniques to use in PTM10, which uses integrated circuit(s) to perform "control[ler]"-type operations. (*Supra*; Ex.1002, ¶192; Ex.1006, 5:65-6:59, FIGS. 4-5 (controller 40); Ex.1024, 6:60-7:14, FIG. 3.) A POSITA would have appreciated implementing well-known processor-based microcontroller technology with PTM10 would have been an obvious variation to how the module can perform similar functionalities, while providing known programmable functionalities. *Kook* discloses "MPU block 30 for controlling internal elements" of charger 1 (§IX.A.1(d)(1); Ex.1059, ¶0041),

and a POSITA would have found it obvious to configure the *Okada-Odendaal-Kook* to include a "**microcontroller**" similar to MPU block 30 for controlling PTM10 components. A POSITA would have had the skills and rationale to implement such a modification, and given the known technology and *Okada*'s teachings, would have done so with a reasonable expectation of success. (Ex.1002, ¶192.)

g) [1(g)]

The *Okada-Odendaal-Kook* combination discloses/suggests this limitation. (Ex.1002, ¶¶193-194.) For reasons explained for limitations 1(e)-1(f), one or more circuits 36/37/38 (part of the "**communication and control circuit**" in the modified *Okada* system) (§IX.A.1(f)) detects, through demodulator 35 ("**first sense circuit**") sensing, a current-modulated response signal from PRM40 (including information corresponding to PDA3 (*e.g.*, device compatibility/capability, power level) via coil 19 ("**a received communication of information in the current modulation in the first primary coil**") used to facilitate power/charge operations, like that described by *Okada*. (§§IX.A.1(e)-IX.A.1(f); *see* §§IX.A.1(a)-IX.A.1(d); Ex.1005, FIG. 3, ¶¶0056-0057, 0059-0077; Ex.1002, ¶194.)

h) [1(h)]

The *Okada-Odendaal-Kook* combination discloses/suggests this limitation. (Ex.1002, ¶¶195-199.) As discussed, a POSITA would have been motivated to configure *Okada-Odendaal-Kook* to implement closed-loop feedback controlled

frequency switching power delivery based on device information to provide appropriate power to PDA3's battery during power/charging operations. (§IX.A.1(d).) As explained (limitations 1(c)-1(g)), the communication/control circuit (*e.g.*, circuit(s) 36/37/38) in *Okada-Odendaal-Kook* would have operated the "**first drive circuit**" (§§IX.A.1(d)-IX.A.1(g), *e.g.,* with modified switching circuit 15 and *e.g.,* circuits 16-18, 21-24, 33) by *e.g.*, to provide control signal(s) to circuit 24 for selecting a switch 21/22/23 at the **onset** of a charging process, and/or by controlling power transmission based on received/demodulated current feedback information to control the operation frequency of the "**first drive circuit**" (*supra*) **during** the charging process in the modified system to inductively transfer power from coil 19 to coil 41 (the "communication and control circuit…configured to" "**operate the first drive circuit to inductively transfer power from the first primary coil to the receiver coil**"), consistent with *Okada-Odendaal-Kook*. (§§IX.A.1(c)-1(g); Ex.1005, ¶¶0040, 0047, 0051, 0057, 0069-0073; Ex.1002, ¶196.)

Further explained above, operating the "first drive circuit" (including circuit 33) in the modified *Okada* system within a range of frequencies near a resonance frequency, would allow "activation and powering of the receiver unit…" (§IX.A.1(d)(3)) causing the "receiver circuit" (*e.g.*, modulator 47) to provide responsive device information received/processed by demodulator 35 (§IX.A.1(f)) based on current modulation in primary coil 19 (§IX.A.1(e)) ("operate the first drive

circuit…**to activate and power the receiver unit to enable the receiver circuit to communicate the information detected in the current modulation in the first primary coil**"). (Ex.1002, ¶¶196-197.)

Consistent with *Okada*, in the above-modified system (*e.g.*, §§IX.A.1(c)-(IX.A.1(d)) circuits 36/37/38 (part of "**communication and control circuit**") controls the operating frequency of the modified switching circuit 15, which provides power to drive oscillating circuit 33 via circuits 16-18 (all part of part of "**drive circuit**" §IX.A.1(d); Ex.1005, ¶0060-0064.) After power/charge operations have begun, circuit 33 (part of "**drive circuit**") in the modified system would generate/transmit, via coil 19, the carrier wave used to "**activate and power**" components in PRM40 ("**receiver unit**") to enable its "**receiver circuit**" (§IX.A.1(b)) to generate/communicate the responsive device information that is transmitted back to PTM10 via coils 41/19 based on current modulation techniques/technologies as explained (§IX.A.1(e)). (Ex.1005, FIG. 3, ¶¶0062-0064, 0074-0090; §§IX.A.1(a)-(g); Ex.1002, ¶¶197-198.)

Also consistent with *Okada*, the "**communication and control circuit**" in the modified system (*e.g.*, circuits 36/37/38) "perform various decision-making processes based on information included in the signal demodulated by…circuit 35" (via current modulation/demodulation (§IX.A.1(e)). (Ex.1005, ¶¶0040, 0042, 0049-0051, 0057-0077, FIGS. 2-3.) Such processes include controlling/configuring

inductive powering/charging of the portable device ("**wherein the communication of information includes information to enable the communication and control circuit to configure the inductive transfer of power to the portable device**"), as explained above. (*Id.*; §§IX.A.1(a)-IX.A.1(f); Ex.1002, ¶¶198-199.)

i) [1(i)]

Okada-Odendaal-Kook in view of *Calhoon* and *Black* discloses/suggests this limitation. (Ex.1002, ¶¶200-214.)

Consistent with *Okada*, in the above-discussed *Okada-Odendaal-Kook* system/apparatus, PTM10 receives device information from PRM40's "receiver circuit" in, which is provided to circuits 36/37/38 (part of "**communication and control circuit**") to determine PDA3's power requirement ("**a power requirement**"). (§§IX.A.1(a)-(h); Ex.1005, ¶¶0057, 0063-0064, 0069, FIG. 3; Ex.1002, ¶201.)

Like *Okada*, *Kook* describes communicating mobile device related information to the charger. (§IX.A.1(d)(1).) Current sensing block 60 "*a current feedback… to control a voltage of a secondary rectification terminal* in the charging battery-pack 200," which describes information **corresponding to voltage/current induced by a primary coil at the output of the device's receiver circuitry**. (Ex.1059, ¶¶0041; *id.*, 0047, 0054, 0071, 0083; Ex.1002, ¶202.) *Kook* also discloses that "a unique ID" ("**a unique identification code**") is "generated in the [battery or

mobile device] in response to the pulse signal of…charger 1" and "transmitted to…charger 1," which, based on the unique ID, supplies power to the battery/mobile device. (Ex.1059, ¶¶00012, 0046.)

Thus, in addition to other teachings/suggestions in *Kook-Okada* and reasons discussed above (§IX.A.1(d)(1); §§IX.A.1(a)-(h)), a POSITA would have been motivated, and found obvious, to configure the *Okada-Odendaal-Kook* system such that the information communicated (§IX.A.1(h)) to include information corresponding to a voltage/current induced by primary coil 19 at the output of the receiver circuit in PDA3 (§IX.A.1(b)); information corresponding to PDA3 (*e.g.*, *Okada*'s device capability/compatibility, charge status) and information corresponding to a voltage/current induced by coil 19 at the output of the receiver circuit (§IX.A.1(b)), *e.g.*, output of rectifying circuit 43 (which provides DC signal to charge/power PDA3's battery) and a unique ID (*e.g.*, that disclosed/suggested by *Kook*) to facilitate the power transmission/adjustment features/operations in the modified *Okada* system as discussed above. (§§IX.A.1(d)-IX.A.1(h); Ex.1002, ¶203.)

A POSITA would have had similar rationale, skills, and expectation of success as that discussed above for the modifications involving *Kook*'s teachings. (*Id.*) A POSITA would have appreciated the benefit of obtaining additional information with the device capability/compatibility/charge information (Ex.1005,

FIG. 3, ¶¶0060-0090), such as a unique PDA3 ID that is used to recognize/confirm/verify the mobile device to receive power from the charger system (Ex.1059, ¶¶0046-0047). Such modification(s) would have been within a POSITA's skill and expectation of success, given it would have involved known technologies/techniques (*e.g.*, leveraging *Okada-Kook*'s modified feedback mechanisms/operation for receiving information, including an identifier, for verifying the mobile device and controlling rectifier voltage output for battery charging, like that taught/suggested by *Okada-Odendaal-Kook*. (Ex.1002, ¶203.)

A POSITA would have also been motivated, and found obvious, to consider/implement use of other information to further such power transfer control operations, especially in light of *Calhoon*. (Ex.1002, ¶204.) *Calhoon* is in the same technical field as *Okada-Odendaal-Kook* and the '371 patent, and discloses features reasonable pertinent to particular problem(s) the inventor for the '371 patent and POSITA was trying to solve. (§IX.A.1(a); Ex.1041, FIGS. 3, 5A, 6, ¶¶0003-0010, 0022, 0029, 0034, 0045-0050, 0065; 1005, ¶0110, 0147-0151; Ex.1001, 1:60-2:17; *infra*; Ex.1002, ¶204.) Thus, *Calhoon* would have been consulted by the inventor and POSITA in context of *Okada* (as modified above). (Ex.1002, ¶204.)

Calhoon discloses an inductive charging system for a mobile device's battery charger/battery pack. (Ex.1041, Abstract, FIGS. 2-3 (below), ¶¶0002, 0008-0010, 0022-0029, 0045, 0065; Ex.1002, ¶¶95-97, 205.)

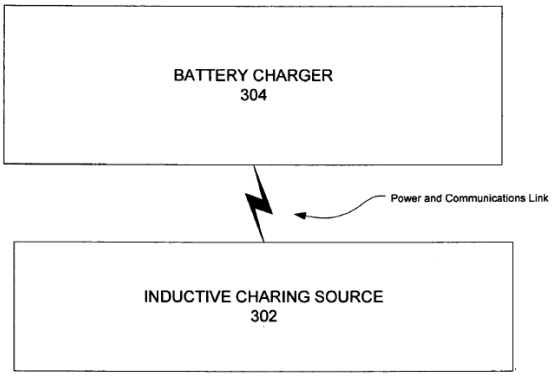

FIGURE 2

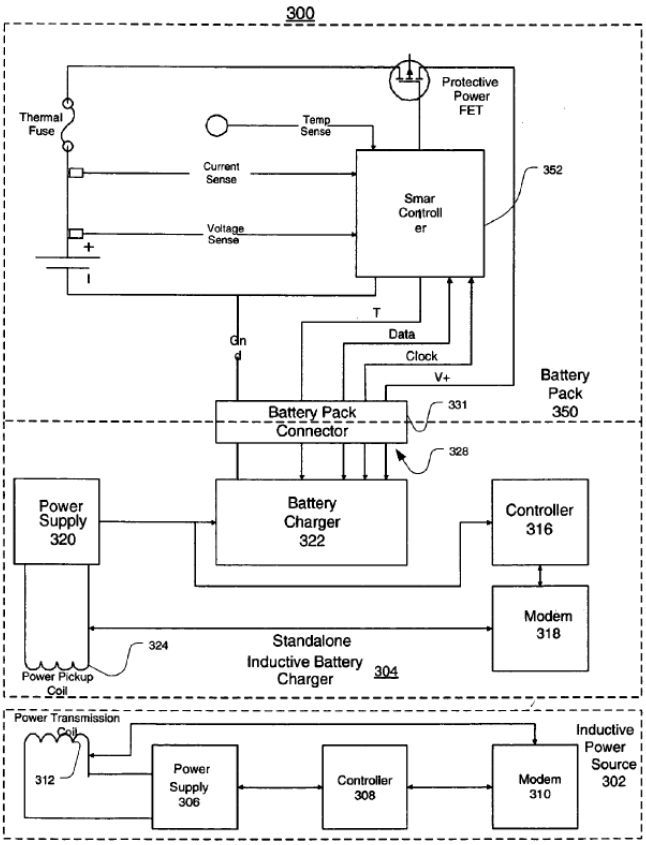

FIGURE 3

Calhoon describes obtaining an **ID/serial number of a power receiver**, *e.g.*, charger assembly 304 or battery pack 350 and wirelessly communicating that information to inductive charging source 302. (*Id.*, Abstract, ¶¶0022, 0034, 0046-

0048, 0050-0052, 0056, FIGS. 3, 5A, 6.) Controller 316 in charger 304 may include data, "such as **a battery charger ID number**, **serial number**, **manufacturer's name**," which can be used "for novel power operations…, such as shown in FIGS. 5A, 5B, and 6." (*Id.*, ¶0038; *id.*, FIGS. 5A-6, ¶¶0034, 0042-0044, 0045-0048, 0049, 0050-0052, 0056.) Charging source 302 "can request other information relevant to" charger 304 (e.g., battery charger ID or charger/battery pack serial number), which charger assembly 304 transmits. (*Id.*, ¶0047.) "***This information can be used for security, data integrity, or other purposes***." (*Id.*) (Ex.1002, ¶¶205-206.) Thus, *Calhoon* discloses providing power receiver information including a **"manufacturer code"** (*e.g.*, battery charger ID/serial number/manufacturer's name). (Ex.1041, ¶0047; *id.*, FIGS. 3-5A, ¶¶0036-0037, 0040-0043.)

Thus, a POSITA would have been motivated, and found obvious, to modify the *Okada*-based system to include in the information communicated (§IX.A.1(h)) device serial number and/or manufacturer's name information ("**manufacturer code**"). (Ex.1002, ¶207.) Such a modification would have enhanced the verification features discussed above (*supra*) by allowing the modified system/cradle 4 to verify and/or authenticate each mobile device based on multiple types of information (*e.g.*, device/battery manufacturer's name (*Calhoon*) and/or with unique ID (*Kook-Calhoon*). (Ex.1002, ¶207.) For similar reasons (including similar rationale/expectation of success, etc.) discussed above (regarding use of unique ID

information), a POSITA would have been further motivated in light of *Calhoon*, to configure the modified *Okada* system/apparatus to maintain, transmit, and use device information like that taught by *Okada*, and by *Kook-Calhoon*, to ensure properly verified and positions/aligned mobile device receive appropriate power in accordance with the charging/power operations discussed above. (§§IX.A.1(a)-IX.A.1(h); Ex.1002, ¶207.) *KSR* at 416-18.

Moreover, while *Okada-Odendaal-Kook-Calhoon* do not expressly disclose communicating "**a charge algorithm profile**," a POSITA would been motivated, and found obvious, in view of *Black* to configure the modified apparatus to communicate charging/powering algorithm profile information with the above-discussed device information to enhance/compliment how cradle 4 ("system") determines and inductively charge PDA3's battery. (Ex.1002, ¶208.)

Okada discloses using received device information to determine a power level (low/intermediate/high) based on portable device's power requirements. (Ex.1005, FIGS. 3, 5, ¶¶0069, 0073-0076, 0090; Ex.1002, ¶209.) It was known to use charging algorithm profile(s) to control mobile device battery charging (*e.g.*, to avoid overcharging). (Ex.1002, ¶209; Ex.1001, 38:13-16 ("[m]ost mobile devices…include a Charge Management IC…to control charging of their internal battery").) Thus, *Black* describes communicating charging profile information for

controlling charging operations in an inductive power transfer system having similar features like those of *Okada-Kook-Calhoon*.

Black discloses inductive charging a portable device battery, including a transceiver for communications with a charger. (Ex.1007, Abstract, FIGS. 1-2 (below), ¶¶0002, 0013-0017.) Battery 100/200 includes a charging coupler 108/208 coupled to cell 104/204 through charging circuit 110/210, and communications coupler 112/212. (*Id.*, ¶¶0015, 0017-0018 ("***first coil 212 may be a portion of the second coil 208***").) (Ex. 1002, ¶¶98-100, 210.)

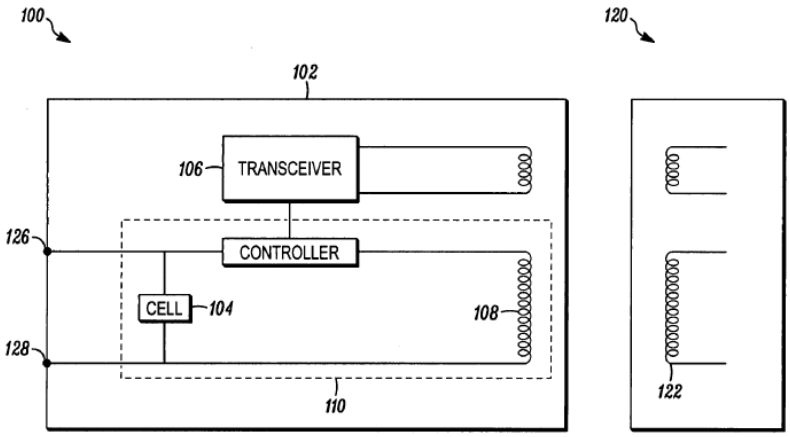

FIG. 1

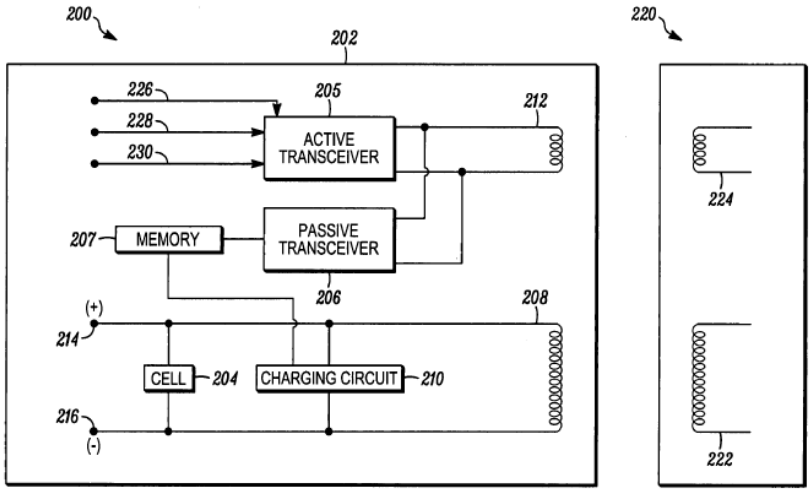

FIG. 2

When battery is in range of the charger, communications between them "may take place and inductive charging can occur." (*Id.*, ¶0019; Ex.1002, ¶210.)

Black is in the same technical field as *Okada-Kook-Calhoon*, and the '371 patent, and discloses features that were reasonable pertinent to one or more particular problems the inventor for the '371 patent (and POSITA) was trying to solve. (*Supra*; §§IX.A.1(a), IX.A.1(d); Ex.1007, Abstract, FIGS. 1-4, ¶¶0002, 0005, 0012-0028 (and *infra*); Ex.1001, 11:31-39; Ex.1002, ¶211) Therefore, a POSITA would have considered the teachings of *Black* when looking to design/implement the above *Okada-Odendaal-Kook-Calhoon* system. (Ex.1002, ¶211.)

Black discloses "device identification and charging" procedures where battery information is requested/received upon detecting battery. (Ex.1007, FIG. 3, ¶0020.)

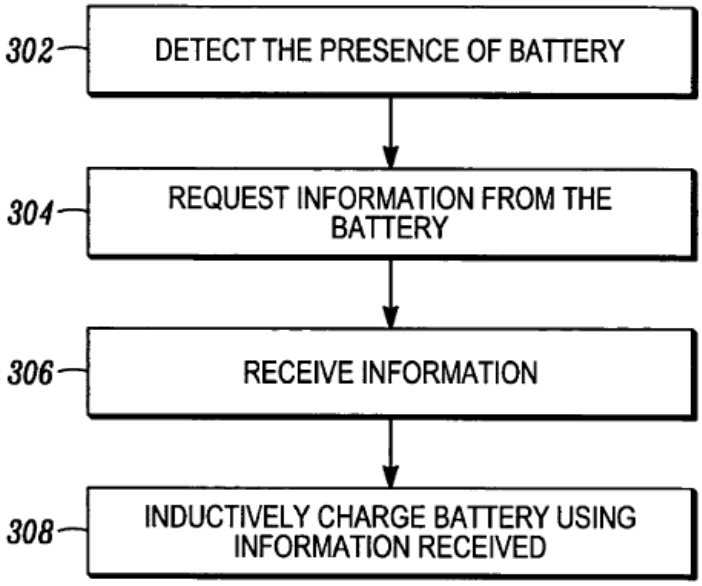

The information may include, *e.g.*, device ID and additional information, *e.g.*, "***battery characteristics*** *or* ***charging profile***." (*Id.*, ¶0021.) Charger 120 inductively charges the battery based on the received information. (*Id.*, ¶0022; Ex.1002, ¶212.)

In light of *Black,* a POSITA would have been motivated and found obvious to modify *Okada-Odendaal-Kook-Calhoon* to include a charging algorithm profile associated with PDA3 and/or its battery ("**a charge algorithm profile**") with the above-discussed device information communicated by PRM40's "**receiver circuit**" (*supra*; §§IX.A.1(c), IX.A.1(h)) to enable circuits 36/37/38 (part of "**communication and control circuit**") to determine/configure the inductive transfer of power to PDA3 in accordance with the closed loop feedback features implemented by the modified *Okada-Odendaal-Kook-Calhoon* system (§§IX.A.1(d)-IX.A.1(h).) A POSITA would have appreciated receiving charging

algorithm profile information would have allowed the modified charger "system" to accurately/properly adjust suitable power suitable for specific battery/device determined to be capable of, and properly positioned/aligned, to receive such power, as discussed. (*Id.*; Ex.1002, ¶213.)

A POSITA would have had reasons to consider and implement such features given it was known different batteries/portable devices have different power/charge characteristics/algorithm-profiles. (Ex.1002, ¶214; Ex.1007, ¶0003; Ex.1037, 1:56-2:6, 2:18-19, 6:51-7:2, 7:36-53, FIGS. 4A-4C; Ex.1039, Abstract, 3:23-35, FIG. 1, 5:20-34.) Thus, a POSITA had the requisite motivation, skills, to implement, and reasonable expectation of success in achieving, the above-discussed modification. (Ex.1002, ¶214.) Especially since it would have involved applying known technologies/techniques (*e.g.,* charging algorithms profiles to control charging) to yield the predictable result of providing an inductive power/charging system that uses specific device information to control power transfer, consistent with the features disclosed by *Okada-Odendaal-Kook-Calhoon-Black*. (*Id*., ¶214.) *KSR*, 550 at 416-18.

j) [1(j)]

The *Okada-Odendaal-Kook-Calhoon-Black* combination discloses/suggests this limitation. (Ex.1002, ¶¶215-216; §§IX.A.1(a)-(i).) For reasons discussed for limitation 1(i) and other limitations, a POSITA would have been motivated, and

found obvious, to modify the *Okada-Odendaal-Kook-Calhoon-Black* combination to "**operate**" the modified charger "system" (including the "**first drive circuit**" (§IX.A.1(d)) according to the received "**power requirement and charge algorithm profile**" to inductively power/charge, via coils 19 and 41, PRM40 ("**receiver unit**") and PDA3's battery ("**battery of the portable device**"). (§IX.A.1(i); *see also* §§IX.A.1(a)-(h); Ex.1002, ¶216.)

k) [1(k)]

The *Okada-Odendaal-Kook-Calhoon-Black* combination discloses/suggests this limitation. (Ex.1002, ¶¶217-221; §§IX.A.1(a)-(j).) As discussed, a POSITA would have modified the *Okada-Odendaal-Kook-Calhoon-Black* system/apparatus such that the communicated information includes information **corresponding to a voltage/current** induced by the first primary coil **at the output of the receiver circuit** (§IX.A.1(i)), where such information would have been detected in the **current modulation** in primary coil 19 from the **current modulated** in **receiver coil** 41 (*Id.*; §§IX.A.1(e), IX.A.1(h); Ex.1002, ¶218.)

Okada discloses continuously providing device information after the onset of power transfer operations (receiving additional information "**while charging the battery of the portable device**"). (Ex.1005, ¶¶0074-0090, FIG. 3; §§IX.A.1(g)-1(j).) Further, *Kook* explains that upon recognizing the "unique ID" of the battery/device, "a voltage of the secondary rectification terminal in [the

battery/device] is controlled to a **constant voltage**" via coils 70/80 by "using an automatic variation algorithm of primary frequency of the non-contact charger 1." (Ex.1059, ¶0047; *id.*, ¶0041 (block 60 "**stably controlling**" power "through a current feedback"); Ex.1002, ¶¶219-220.)

Consistent with the above-discussed modified *Okada* system in light of, *inter alia Kook* (§IX.A.1(d)), a POSITA would have been motivated, and found obvious, to configure the "**communication/control circuit**" (§IX.A.1(f)) in *Okada-Odendaal-Kook-Calhoon-Black* (§§IX.A.1(d)-IX.A.1(j)) to continuously "**receive additional information**" (*e.g.*, information corresponding to a voltage/current induced by coil 19 at "receiver circuit" output) "**while charging the battery of the portable device**" in order to "stably control[]" an output voltage to "a constant voltage," thus allowing the charger system to adjust its operation, and thus the transmitted power (similar to *Kook*/*Okada* and explained above (§IX.A.1(d)). (Ex.1002, ¶221.) Given the above modified system would have been configured to communicate such information using current modulation/demodulation techniques/components for reasons explained (§§IX.A.1(e)-(j)), such "additional information" would have been received "**in the current modulation in the first primary coil** [19] **from the modulation of the current in the receiver coil** [41]" like that claimed. (Ex.1002, ¶221.)

l) [1(l)]

The *Okada-Odendaal-Kook-Calhoon-Black* combination discloses/suggests this limitation for reasons explained. (Ex.1002, ¶¶222-223; §§IX.A.1(a)-(k).) As discussed for limitations 1(d)-(k), the *Okada-Odendaal-Kook-Calhoon-Black* system/apparatus would have been configured to perform a closed loop feedback process (§IX.A.1(d)) to stably control, using current feedback, the portable device's rectification terminal voltage (provided as output of receiver circuit (§IX.A.1(b) used to charge PDA3's battery) ("**regulate in a closed loop feedback manner the voltage or current at the output of the receiver circuit**"). (§§IX.A.1(d)-IX.A.1(k); Ex.1002, ¶223.) For similar reasons explained above, such features would have been provided in accordance with the current feedback information continuously received during operation ("**the received additional information corresponding to the voltage or current at the output of the receiver circuit**") (§§IX.A.1(k)) by varying the operating frequency of the primary-side circuit (via, *inter alia*, modified switching circuit 15 (part of "**first drive circuit**")) (§IX.A.1(d)) while transferring power to charge PDA3's battery (§§IX.A.1(e)-IX.A.1(l)) ("**while charging the battery of the portable device**"). (*See also* §§IX.A.1(a)-(c); Ex.1002, ¶223.)

m) [1(m)]

The *Okada-Odendaal-Kook-Calhoon-Black* combination discloses/suggests this limitation. (Ex.1002, ¶¶224-226; §§IX.A.1(a)-(l).)

As explained, "[e]ven after power transmission has begun," device information is periodically/continuously transmitted from PRM40 to PTM10 in response to the periodic/continuous transmission of the carrier wave by circuit 33. (§§IX.A.1(f)-(l); Ex.1005, ¶0074-0077, FIG. 3 (below); Ex.1002, ¶225.)

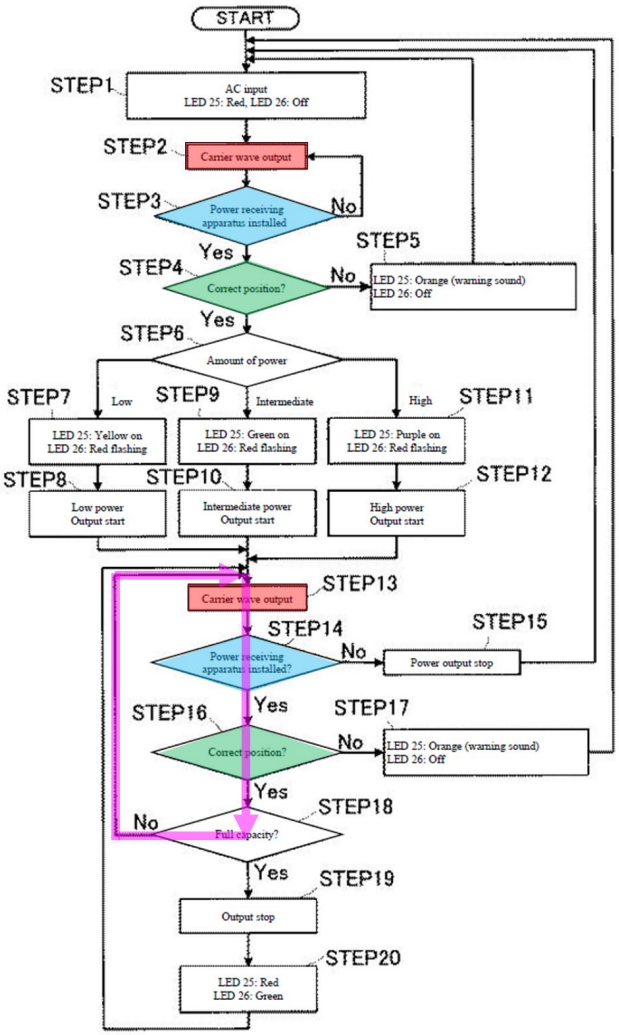

Based on the information received/detected through demodulator 35 ("**the first sense circuit**") and provided from PRM40's circuit 47 (part of "**receiver circuit**"), circuit 36 determines whether PDA3 is properly positioned on cradle 4 (Ex.1005, ¶¶0074-0075) and circuit 38 determines whether PDA3 is fully charged (*id.*, ¶0076), where circuits 36/38 are part of the "**communication and control circuit**" (§IX.A.1(f)). (Ex.1005, ¶¶0074-0090; Ex.1002, ¶226.) For reasons explained, the *Okada-Odendaal-Kook-Calhoon-Black* system/apparatus, would have been configured to perform similar features in similar fashion, like that recited in limitation 1(m). (§§IX.A.1(a)-IX.A.1(l); Ex.1002, ¶226.)

n) [1(n)]

The *Okada-Odendaal-Kook-Calhoon-Black* combination discloses/suggests this limitation. (Ex.1002, ¶¶227-228; *see also* §§IX.A.1(a)-(m).)

Okada discloses, if circuit 36 determines a device "has been removed" and/or is not properly positioned, then "circuit 24 controls all of the transistors [21/22/23]…into an OFF state and stops power transmission." (Ex.1005, ¶¶0074-0075, FIG. 3). Likewise, circuit 38 determines whether "a charged state" of PDA3 is at "full capacity," and if so, "circuit 24…ends power output." (*Id.*, ¶0076, FIG. 3.) (Ex.1002, ¶228.) Consistent with that disclosed in *Okada* and for reasons explained, the "**communication and control circuit**" (§IX.A.1(f) (circuits 36, 38), §IX.A.1(k)) in the *Okada-Odendaal-Kook-Calhoon-Black* system would have

likewise been configured to "**stop operation of the first drive circuit**" (§IX.A.1(d) for **inductive power transfer to PDA3**, upon determination PDA3 was removed or its battery is fully charged ("**device is no longer present or charging is complete**"). (§§IX.A.1(d)-(m); Ex.1002, ¶228.)

2. Claim 9

a) [9(a)]

Okada-Odendaal-Kook-Calhoon-Black-Symons discloses/suggests this limitation. (Ex.1002, ¶¶229-234; §IX.A.1.) While *Okada-Odendaal-Kook-Calhoon-Black* does not expressly disclose NFC features, a POSITA would have found it obvious to implement such features in view of *Symons*. (Ex.1002, ¶230.)

Symons, disclosing an inductive power/signal system, is in the same technical field as the '371 patent and *Okada*, and discloses features reasonably pertinent to particular problem(s) the inventor/'371-patent/POSITA were trying to solve. (Ex.1070, Abstract, ¶¶0006-0008, 0018-0025, 0028-0049; §IX.A.1; Ex.1001, 1:50-5:17, 11:66-12:4, 39:52-64.) Therefore, a POSITA had reasons to consider/consult *Symons* when designing/implementing *Okada-Odendaal-Kook-Calhoon-Black*. (*Supra*; Ex.1002, ¶¶101-102, 231.)

Symons discloses portable computer **2** inductively powering mobile telephone **1**'s battery (Ex.1070, ¶0028, FIG. 1; §IX.A.1) having "NFC communicator…30" with antenna 33. (Ex.1070, ¶0023; Ex.1002, ¶232.) *Symons*

explains well-known uses of NFC communication (and requirement of an "antenna"). (Ex.1070, ¶¶0002-0006.)

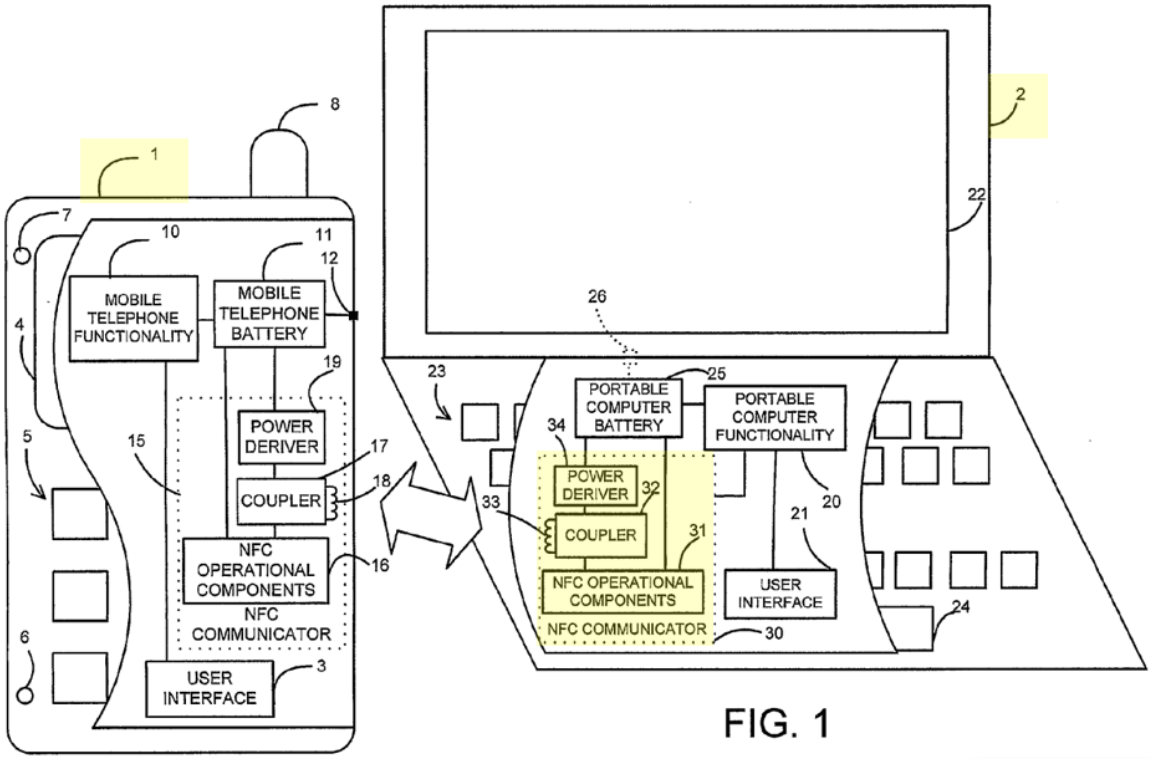

FIG. 1

A POSITA would have been motivated and found obvious to configure the modified *Okada* "system" (§IX.A.1(b)) (thus "apparatus" (§IX.A.1(a)), of modified *Okada* to implement NFC technologies/functionalities in mobile devices (including an antenna), like *Symons*. Such modification would have predictably enhanced/complimented the modified *Okada* with additional functionalities for communication (*e.g.*, NFC technologies/components) to be implemented in chargers and mobile devices (like those of *Okada/Symons*) (*e.g.*, data

transfer/authentication/transaction-based applications). (Ex.1002, ¶233; Ex.1062, FIG. 1, ¶¶0022-0026, 0185.)

Given *Okada* contemplates many applications/configurations involving powering/charging mobile devices (*e.g.*, PDA) (§IX.A.1(a)), and the well-known use/benefits of NFC (Ex.1070, ¶¶0002-0006), a POSITA would have been motivated to configure/implement NFC (with an antenna) with the charger so it could facilitate near-field communications for applications, including transaction-based features (Ex.1062). (Ex.1002, ¶233.) Such an implementation would have enhanced mobile device (*e.g.*, *Okada*'s PDA) communication's conveniences/security (*e.g.*, charging during transferring data). (*Id.*; Ex.1070, ¶0072.)

A POSITA would have had the skill/rationale in implementing, and reasonable expectation of success in achieving, such modification (Ex.1002, ¶234) given it was known to employ NFC chip(s)/components with charger to provide benefits of NFC (*e.g.,* POS transactions and wireless communication etc.) (*Supra*.) Such modification would have involved applying known technologies/techniques (*e.g.,* known NFC antenna/circuitry use) to yield the predictable result of providing a charger "system"/"apparatus" of providing conventional features, *e.g.*, NFC-based communications, consistent with *Symons* and contemporaneous knowledge. (Ex.1002, ¶234.) *KSR* at 416-18.

b) [9(b)]

Okada-Odendaal-Kook-Calhoon-Black-Symons discloses/suggests this limitation for reasons in limitation 1(c). (Ex.1002, ¶¶235-238; §IX.A.1(c), §IX.A.2(a).)

As explained, *Odendaal* discloses "**pcb**" planar primary coil(s). (§IX.A.1(c); Ex.1008, 2:55-64.) A POSITA would have had the same rationale/skills/expectation of success in configuring/implementing modified *Okada* with PCB-based planar primary coil (limitation 1(c)). (*Id.*; Ex.1002, ¶¶236-238.) Thus, in view of *Odendaal*, it would have been obvious to configure modified *Okada* with a planar PCB primary coil. (*Id.*) *Shima*'s additional teachings would have further motivated the above modification for reasons below. (§IX.A.2(c); Ex.1002, ¶¶236-238.)

c) [9(c)]

Okada-Odendaal-Kook-Calhoon-Black-Symons in further view of *Shima* and *Hui-027* discloses/suggests this limitation. (Ex.1002, ¶¶239-251; §§IX.A.1, IX.A.2(a)-(b).)

While modified *Okada* does not expressly disclose multi-layer PCB coil features of limitation 9(c), it would have been obvious to configure coil 19 of modified *Okada* to include such features in view of *Shima* and *Hui-027*. (Ex.1002, ¶239.)

Odendaal discloses the primary coil may be "a set of **spiral coils**…with each spiral…**on a separate substrate**, [*e.g.,*]… **printed circuit board**" (Ex.1008, 2:19-28, 3:41-48, 6:59-64) ("**the PCB coil comprises multiple layers of…spiral-shaped coil patterns**"). In addition to reasons above for modifying *Okada* in view of *Odendaal*, a POSITA would have been motivated and found obvious to include these features, *e.g.*, a primary PCB coil having a set of multi-layer/spiral-shaped coils, when implementing above-modified *Okada* (Ex.1002, ¶240) especially when it was known multi-layer spiral-shaped coils increase the generated magnetic field. (Ex.1002, ¶240; Ex.1008, 3:41-48.)

A POSITA would have had the skills/rationale in light of the teachings/suggestions of above-modified *Okada*, and state-of-art knowledge, to implement the above-modification while considering design tradeoffs and techniques/technologies with a reasonable expectation of success. Especially given such modification would have involved known technologies/techniques (*e.g.*, multi-layer spiral-shaped PCB coils) to yield the predictable result of expanding/complementing applications of an inductive powering/charging system, similar to *Okada-Odendaal*. (Ex.1002, ¶241; §IX.A.1(a).) *See KSR* at 416-18. A POSITA would have been further motivated to configure the above-modified multi-layer primary coil to have "**substantially similar spiral-shaped coil patterns**" that are "**connected by vias**" in light of *Shima*. (Ex.1002, ¶241.)

Shima, like *Okada-Odendaal-Kook-Calhoon-Black-Symons*, discloses an inductive powering system using primary-secondary coils. (Ex.1032, Abstract, 1:42-50, 2:12-4:10, 5:62-6:53, 7:17-8:38), and thus is in the same technical field as the '371 patent. (§IX.A.1; Ex.1001, Abstract.) *Shima* discloses features reasonably pertinent to particular problem(s) the '371 patent/inventor/POSITA were trying to solve. (*Id.*; Ex.1001, Abstract, 11:5-10; Ex.1002, ¶242.) Therefore, a POSITA had reasons to consider/consult *Shima* in context of modified *Okada*. (*Id.*)

Shima discloses coils having similar spiral patterns in different PCB layers ("**substantially similar spiral-shaped coil patterns**") with through-holes (known as "**vias**") connecting the patterns. FIG. 3A (below) is described comprising "thin printed-circuit substrates 30-1 to 30-n having similar spiral coil patterns 32-1 to 32-n." (Ex.1032, 5:62-6:1, FIGS. 3D-3E, 6:13-35.) Coil patterns' starting/terminating ends are connected using through-holes 33/34. (*Id.*, 6:4-21.) Layers of loop patterns (*e.g.*, 37-1 to 37-n (FIG. 5A) may have "through-holes [39] connected…[where] the printed-circuit substrates 30-1 to 30-n are stacked." (*Id.*, 7:17-35; Ex.1002, ¶243.)

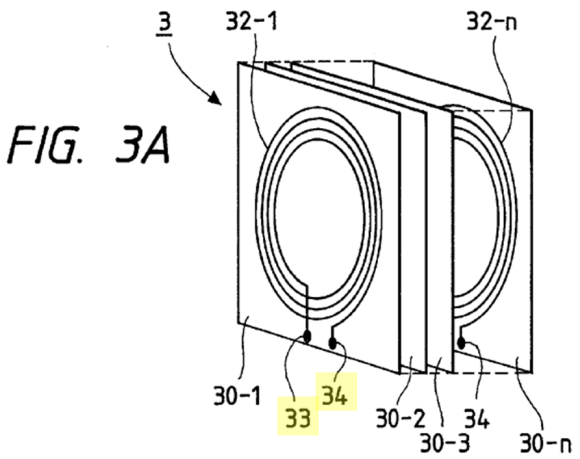

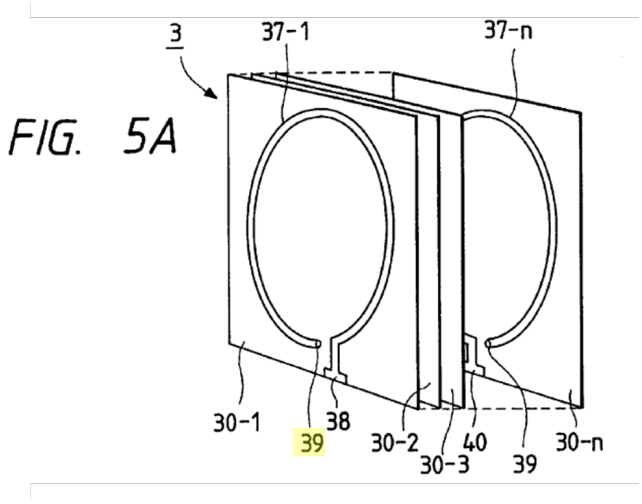

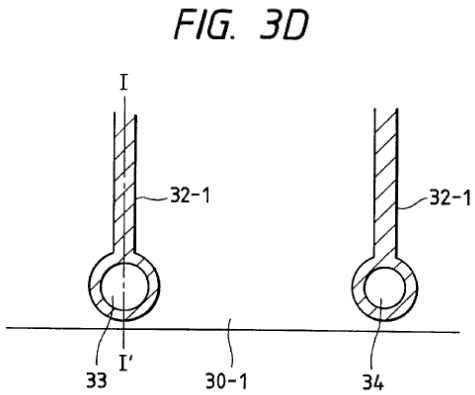

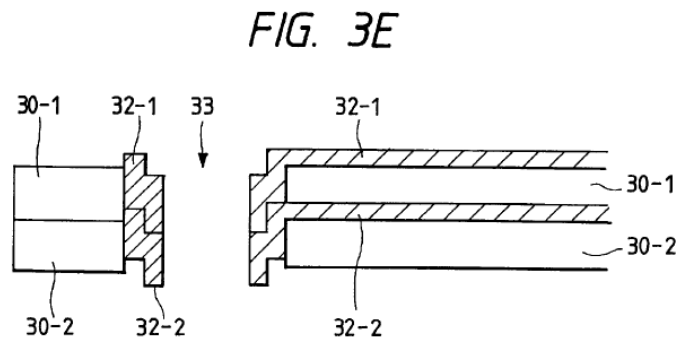

In view of *Shima-Odendaal*, a POSITA would have been motivated and found obvious to configure/implement primary coil(s) in above-modified *Okada* (§IX.A.1; §IX.A.2(a)-(b)) as a multi-layer/stacked PCB-planar coil having similar spiral-shaped patterns interconnected by vias to maintain coils' continuity while being compact with enhanced efficiency and reduced conductor resistance as *Shima* suggested. (Ex.1002, ¶244; Ex.1032, 6:47-53, 7:41-44, 8:28-33.) A POSITA would have appreciated the versatility in applications taught by *Okada* (§IX.A.1(a)) and known stacked PCB coil and interconnection/vias designs (*Shima*/*Odendaal*), and

thus been motivated to design/implement systems consistent with such applications, including compact configurations. (§IX.A.1(c); Ex.1002, ¶244.) Implementing multi-layered coil(s) having substantially similar patterns would have reduced design/manufacturing complexity comparing to those having different patterns. (*Supra*; Ex.1002, ¶244.)

A POSITA would have had the skill/rationale in implementing, and reasonable expectation of success in achieving, such a modification. (Ex.1002, ¶245.) Especially since it was known using vias to connect multi-layered PCBs. (*Id.*, ¶¶245; Ex.1045, ¶0026, FIGS. 3A-C; Ex.1032 (*supra*).) Such modification would have involved applying known technologies/techniques to yield the predictable result of providing charger(s) with multi-layer PCB primary coils that would have performed power/signal transfer/communications consistent with above-discussed modified system. (§IX.A.1; §IX.A.2(a)-(b).) *KSR* at 416-18.

While above-modified *Okada* discloses/suggests the above-discussed primary coil features, it does not expressly disclose the multi-layered coils are "**of substantially similar copper thickness**" and that "**each layer comprises 1 to 4 ounce (oz) copper thickness material**." A POSITA would have found it obvious to implement such features. (Ex.1002, ¶246.)

Hui-027, like the above-modified *Okada*, discloses an inductive powering system using primary-secondary coils. (Ex.1064, Abstract, ¶¶0001-0004, 0030-

0033, 0039-0042, 0065, 0067, Table I, FIGS. 1, 2, 3a, and 3b), and thus is in the same technical field as the '371 patent. (§IX.A.1; §IX.A.2(a)-(b); Ex.1001, Abstract.) *Hui-027* discloses features reasonably pertinent to particular problem(s) the inventor/'371 patent and a POSITA were trying to solve. (*Id.*; Ex.1001, Abstract, 11:5-10; Ex.1002, ¶247.) Therefore, a POSITA had reasons to consider/consult *Hui-027* when designing/implementing the above-modified *Okada* system. (Ex.1002, ¶247.)

Hui-027 discloses copper PCB coils of certain thickness. Table I shows PCB coils of FIGS. 3a/3b having a "Copper Track Thickness" of "70 µm (**2 Oz/ft^2**)" and FIG. 3b illustrates primary winding's "Conductor **Thickness**." (Ex.1064, ¶¶0004, 0030, FIGS. 3a/3b; Ex.1002, ¶248.)

TABLE I

Geometric Parameters of the PCB Transformer

Geometric Parameter	Dimension
Copper Track Width	0.25 mm
Copper Track Separation	1 mm
Copper Track Thickness	70 μm (2 Oz/ft^2)
Number of Primary Turns	10
Number of Secondary Turns	10
Dimensions of Ferrite Plates	25 mm × 25 mm × 0.4 mm
PCB Laminate Thickness	0.4 mm
Insulating Layer Thickness	0.228 mm
Transformer Radius	23.5 mm

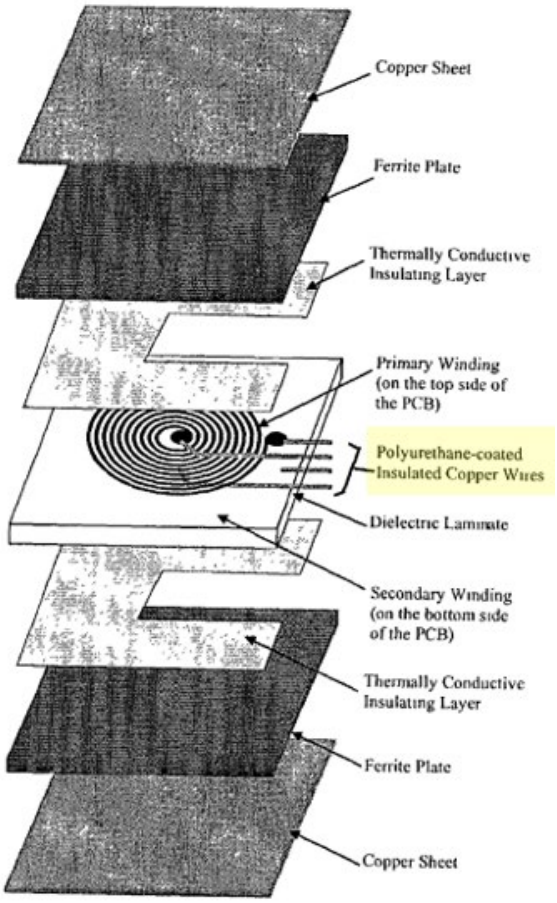
Copper Sheet
Ferrite Plate
Thermally Conductive Insulating Layer
Primary Winding (on the top side of the PCB)
Polyurethane-coated Insulated Copper Wires
Dielectric Laminate
Secondary Winding (on the bottom side of the PCB)
Thermally Conductive Insulating Layer
Ferrite Plate
Copper Sheet

Fig. 3a.

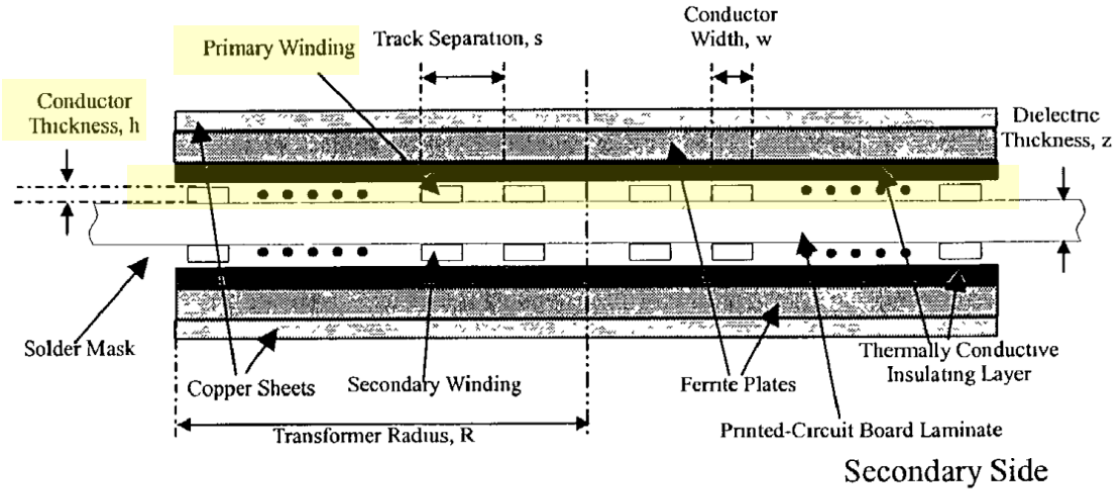
Primary Winding
Track Separation, s
Conductor Width, w
Conductor Thickness, h
Dielectric Thickness, z
Solder Mask
Copper Sheets
Secondary Winding
Ferrite Plates
Thermally Conductive Insulating Layer
Transformer Radius, R
Printed-Circuit Board Laminate
Secondary Side

Fig. 3b.

In view of *Hui-027*, a POSITA would have been motivated and found obvious to configure/implement the primary coil in the above-modified system (§IX.A.1; §IX.A.2(a)-(b)) as a multi-layer PCB copper coil with each layer having a thickness of a few ounces, including 1-4 ounces as suggested by *Hui-027*, especially when *Okada-Odendaal*, while disclosing PCB coils, does not provide specifics regarding coil material and its thickness. (Ex.1002, ¶249.) The '371 patent acknowledges "[m]ost common PCBs use 1-2 oz copper PCBs." (Ex.1001, 22:1-2.)

Using multi-layer coils having "1 to 4 ounce copper thickness" for "each layer" and having "substantially similar copper thickness" would have been a matter of routine optimization of a result-effective variable (copper thickness, which may affect electrical conductivity/weight of the coil), well within a POSITA's grasp and technical ability, as acknowledged by the '371 patent. (Ex.1002, ¶250.) *See E.I. DuPont de Nemours & Co. v. Synvina C.V.*, 904 F.3d 996, 1010 (Fed. Cir. 2018) ("[D]iscovery of an optimum value of a result effective variable in a known process is ordinarily within the skill of the art.")).

A POSITA would have had the skill/rationale in implementing, and reasonable expectation of success in achieving, such a modification. (Ex.1002, ¶251.) Especially since it was known using a multi-layer coil having a thickness of several ounces, *e.g.*, 2 oz. (Ex.1064, Table 1; Ex.1001, 22:1-2; Ex.1002, ¶251.) Such a modification would have involved applying known technologies/techniques

to yield the predictable result of providing a charger with a (primary) copper coil having a certain thickness, *e.g.*, 2 oz, which would have performed charging/communications consistent with the *Okada-Odendaal-Shima-Hui-027* system. *KSR* at 416-18.

d) [9(d)]

Okada-Odendaal-Kook-Calhoon-Black-Symons-Shima-Hui-027 discloses/suggests this limitation. (Ex.1002, ¶¶252-257; §IX.A.1; §IX.A.2(a)-(c).)

While modified *Okada* does not expressly state the operating frequency (§IX.A.1(d)(2)) is within the claimed range, a POSITA would have found it obvious implementing such features given inductive powering/charging system's operating frequency were commonly configured within that range, as exemplified by *Shima*. (Ex.1002, ¶253.)

In addition that discussed above (§IX.A.2(c)), *Shima* discloses known charger configurations transferring power at an operating frequency within 100 kHz to 1 MHz. *Shima* discloses "modulator 10" (FET driver) drives "power transistor Q3" (FET switch) of the "power amplifier 12" with a "signal of frequency f1…" for powering proximity card 2 (receiver) (*id.*, 4:65-5:25, 7:6-16), where "the operating frequency is typically…several hundred KHz," (*Id.*, 1:42-50, FIG. 2 (below); Ex.1002, ¶254.)

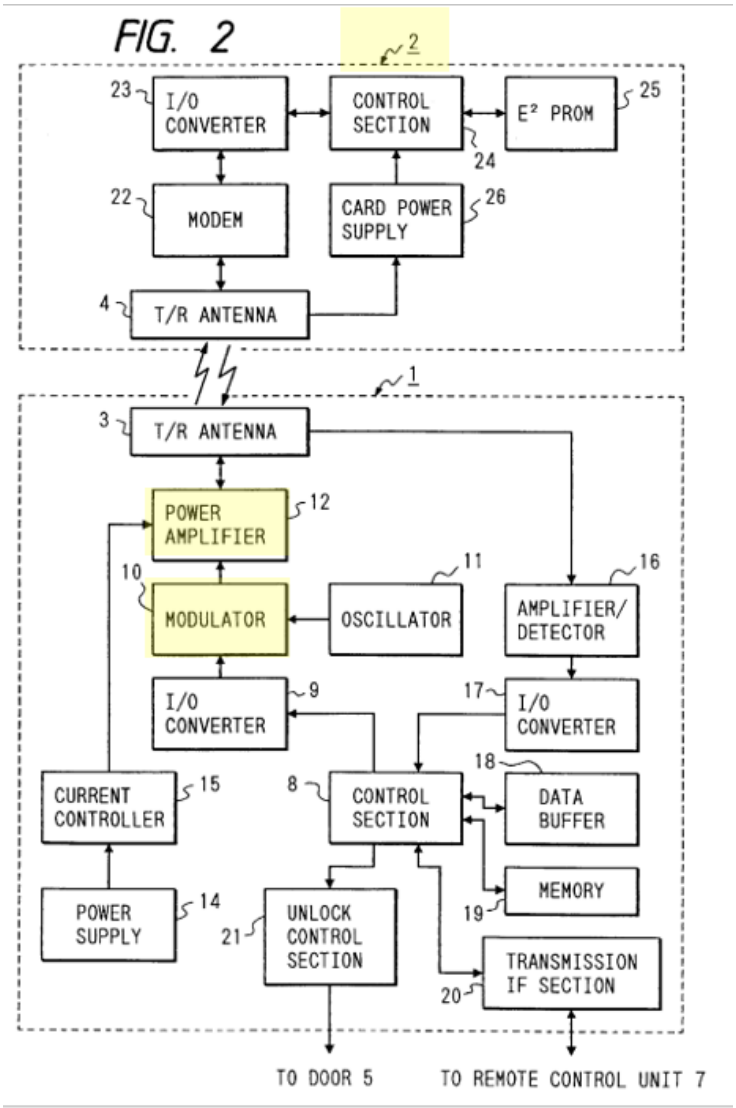

A POSITA would have been motivated and found obvious to configure/implement the "drive circuit" (§IX.A.1(d)) in the modified *Okada* system (§IX.A.1; §IX.A.2.a-c) as one that drives coil 19 at an operating frequency to maintain Q sharpness and coil radiation efficiency as suggested by *Shima*. (Ex.1002, ¶¶255-256; Ex.1032, 2:24-59.) A POSITA would have appreciated the drive circuit of the modified *Okada* system (§IX.A.1(a)), and known frequencies to operate them (*Shima*), and thus been motivated to design/implement system

consistent with such drive circuits to accommodate applications contemplated by *Okada*. (§§IX.A.1(a)-(d); Ex.1002, ¶¶255-256.)

A POSITA would have had the skill/rationale in implementing, and reasonable expectation of success in achieving, such a modification. (Ex.1002, ¶257.) Especially since it was known to transfer power at certain operating frequency ranges. (*Id.*, ¶¶257; Ex.1032 (*supra*).) Choosing a range such as 100kHz-1MHz would have been a foreseeable/obvious design decision within the realm of knowledge of, and options available to, a POSITA to operate the "drive circuit" in the modified *Okada* system to facilitate power deliver to portable devices. (Ex.1002, ¶257.) Especially since such modification would have involved applying known technologies/techniques/design concepts/options to yield the predictable result of configuring the drive circuit to drive the primary coil within a certain operating frequency range that would have performed powering/communications consistent with contemporaneous knowledge and contemplated by the modified *Okada* system. (§IX.A.1; §IX.A.2.a-c). *KSR* at 416-18.

B. Ground 2: Claim 10 is obvious over *Okada* in view of *Odendaal*, *Kook, Calhoon, Black*, *Symons*, *Shima*, *Hui-027*, and *Hahn*

1. Claim 10

a) [10(a)]

The analysis above for limitation 9(a) explains how the above-modified *Okada* system in view of *Symons* discloses/suggests the "system"/"apparatus"

(§§IX.A.1(a)-(b)) comprising an NFC antenna as claimed. (§IX.A.2.) For similar reasons, *Okada-Odendaal-Kook-Calhoon-Black-Symons* discloses/suggest limitation 10(a). (*Id.;* Ex.1002, ¶¶258-259.)

b) [10(b)]

c) [10(c)]

d) [10(d)]

e) [10(e)]

f) [10(f)]

g) [10(g)]

Okada-Odendaal-Kook-Calhoon-Black-Symons-Shima-Hui-027 in view of *Hahn* discloses/suggests limitations 10(b)-10(g) (Ex.1002, ¶¶260-266; §§IX.A, IX.A.2(a).)

As explained for limitation 9(c), the above-modified *Okada* system (in view of *e.g., Odendaal* and *Hui-027*) discloses/suggests the primary coil configured as a multi-layered spiral "**PCB**" coil (*Odendaal*) with "**copper**" windings (*Hui-027*), as recited in limitations 10(a)-(c). (§IX.A.2(c).) The same section explains how/why it would have been obvious to configure primary coil 19 of the modified system to include multi-layer coil(s) connected by vias in light of *Shima*. (*Id.*) While the above-discussed modified *Okada* combination does not expressly disclose multi-coil layers, each having a PCB coil with **inner/outer port(s) coupled by vias forming respective common pads to provide electric coupling** as claimed in **limitations**

10(b)-10(g), a POSITA would have found it obvious to implement such features as it would have been a foreseeable way for interconnecting multi-layer PCB circuit arrangements (as implemented in the modified *Okada* system in view of *Hui*-027), as exemplified by *Hahn*. (Ex.1002, ¶261.)

Hahn, like above-modified *Okada* (§IX.A), discloses an inductive power/signal transfer system using primary/secondary coils. (Ex.1065, Abstract, ¶¶0001-0010, 0013-0017, 0027-0029), and thus is in the same technical field as the '371 patent, and discloses features reasonably pertinent to particular problem(s) the inventor/'371 patent and a POSITA were trying to solve. (§IX.A.1; §IX.A.2(a)-(b); Ex.1001, Abstract, 1:60-5:17, 10:17-22; Ex.1002, ¶262.) Therefore, a POSITA had reasons to consider/consult *Hahn* when looking to design/implement the modified *Okada* system discussed above. (§IX.A; Ex.1002, ¶262.)

Hahn discloses a multi-layer primary coil for induction and data transfer. (Ex.1065, Abstract, ¶¶9-13), where windings are formed with more than two PCBs 50, each having "a prescribed circuit pattern 52 (*e.g.*, circular spiral) with "a same shape" (*id.*, ¶15). Each PCB layer has an inner port and an outer port (*Id.*, ("**first ends 54** positioned on an **outside** of the circuit patterns 52…**second ends 56** positioned on an **inside** of the circuit patterns 52"), FIG. 2.) Each of the inner ports are coupled together by vias forming a first common pad (*Id.*, ¶15, ("**second ends 56** positioned on an **inside** of the circuit patterns 52 are electrically **connected by a**

second connection part 56a penetrating every second ends 56.…second connection part 56a [is] **connected to**…**a second terminal 56b**"), ¶0025 (*supra*), FIG. 2.) *Hahn* discloses that each of the outer ports are coupled together by vias to form a second common pad (*Id.*, ¶0015, ("**first ends 54** positioned on an **outside** of the circuit patterns 52 are electrically **connected by a first connection part 54a** penetrating every first ends 54. … first connection part 564 [is] **connected to a first terminal 54b**"), ¶0025 (*supra*), FIG. 2 (below); Ex.1002, ¶¶109-111, 263.)

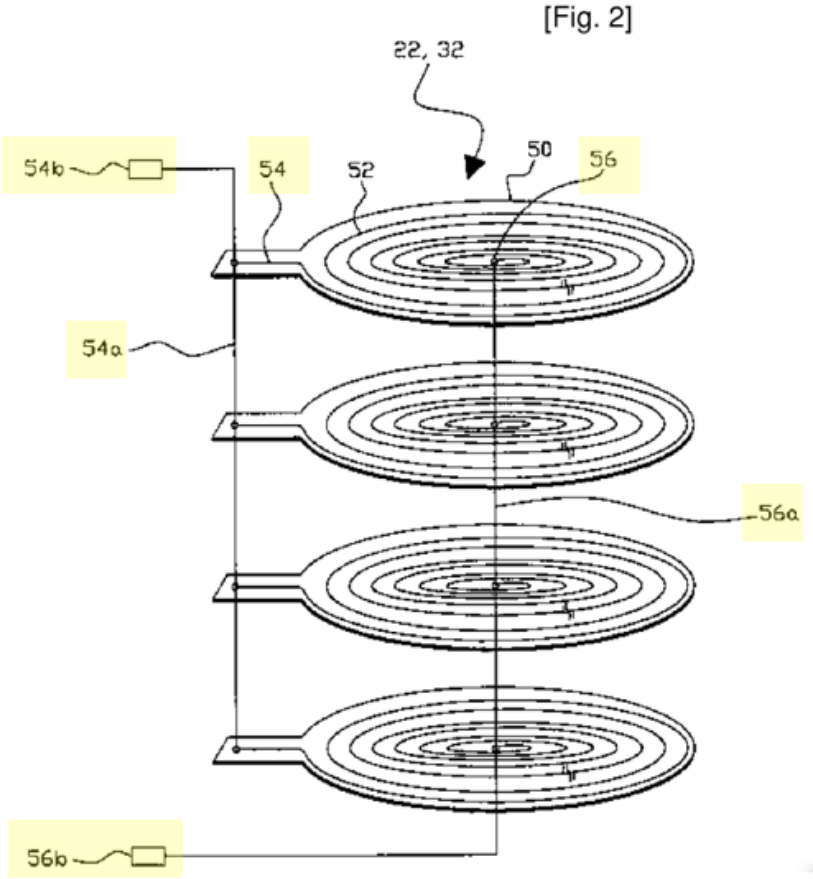

Hahn further discloses that the two common contact pads provide electrical coupling for applying an alternating electrical current to the first primary coil. (*Id.*, ¶0013,

¶0015.) *Hahn* further discloses that the "induction coil…is made of metals such as copper." (*Id.*, ¶0007; ¶0025; Ex.1002, ¶264.)

In view of *Hahn* in context with the teachings of *Okada*, *Odendaal*, *Shima*, and *Hui-027*, a POSITA would have been motivated and found obvious to configure/implement primary coil 19 in the above-modified *Okada* system (§IX.A.1; §IX.A.2(a)-(b)) as multi-layer/stacked PCB-planar coils interconnected by vias with inner/outer ports and common pads, similar to *Hahn* and claimed in limitations 10(b)-10(g) to reduce primary coil impedance, allow currents of different layers to flow in the same direction, and improve power transmission efficiency, as suggested by *Hahn*. (Ex.1002, ¶265; Ex.1065, ¶0027.) A POSITA would have appreciated the versatility in applications taught by *Okada* (§IX.A.1(a)) and the known use of stacked PCB coil designs and ways to interconnect them (vias) (*Hahn*, *Odendaal*), and thus been motivated to design/implement such modification, consistent with the thin form factor applications contemplated by *Okada* and *Odendall-Shima-Hui-027-Hahn*. (*Supra;* §§IX.A.1(c), IX.A.2; Ex.1002, ¶265.)

A POSITA would have had the skill/rationale in implementing, and reasonable expectation of success in achieving, such a modification. (Ex.1002, ¶266.) Especially since it was known using multi-PCB layer copper coil designs with vias to interconnect the PCBs to promote electrical coupling, and inductive energy transfer, consistent with inductor coil applications like those described by

Okada-Odendaal-Shima-Hui-027-Hahn, and contemporaneous knowledge. (*Id.*, ¶¶266; Ex.1045, ¶0026, FIGS. 3A-C; Ex.1065 (*supra*).) Also because such modification would have involved applying known technologies/techniques to yield the predictable result of providing a charger system with a stacked multi-PCB layer primary coil that would have improved energy transmission efficiency/performance consistent with that discussed above. (§IX.A.1; §IX.A.2(a)-(b)). *KSR* at 416-18.

C. Ground 3: Claim 15 is obvious over *Okada* in view of *Odendaal*, *Kook, Calhoon, Black,* and *Ahn*

1. Claim 15

a) [15]

Okada-Odendaal-Kook-Calhoon-Black in view of *Ahn* discloses/suggests this limitation. (Ex.1002, ¶¶267-276; §§IX.A, IX.A.2(a)-(b).)

The analysis for limitation 1(d)(1) explains how *Okada* (including as modified) has rectifier/smoothing circuits 13/14 providing a "DC voltage" that provides a "**DC voltage input**" to the "**drive circuit**." (§IX.A.1(d)(1); Ex.1005, FIG. 2 (below), Ex.1005, ¶0038; Ex.1002, ¶269.)

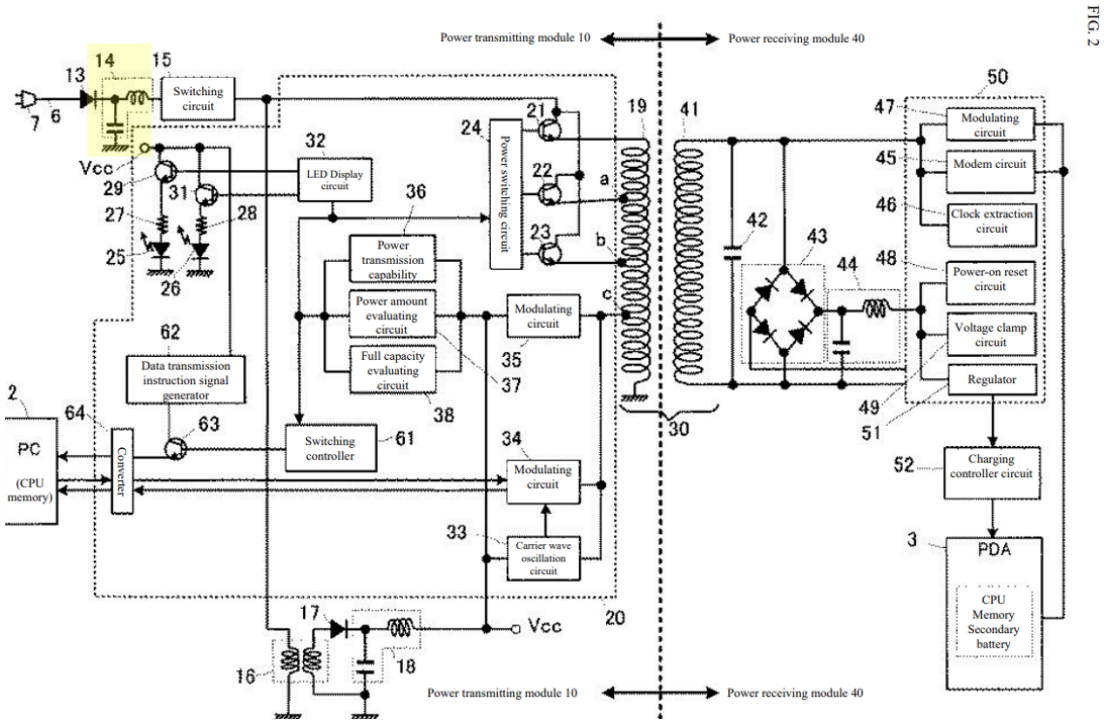

Circuit 14 is coupled to commercial power via rectifier 13 and cable/plug 6/7. (Ex.1005, ¶¶0034-0035, 0049, 0055.) A POSITA understood/appreciated that commercial power (*e.g.*, mains power) and related interface components was a known source of EMI, as were the benefits of using filter circuits (*e.g.,* smoothing circuits) to mitigate/shield components and circuitry from such radiation . (Ex.1002, ¶270; Ex.1071, Abstract, ¶¶0003-0009 ("EMI filter circuit is a mains filter which is arranged between the mains and a load"); Ex.1072, ¶¶0002, 0006, 0011, 0013 (smoothing capacitors "have the advantages of…EMI reduction").) During operation, the charger system (cradle 4/PTM10) in *Okada* (and likewise the above modified *Okada* system) would receive commercial power that is rectified and filtered by circuit 13/14 to provide the "**DC voltage input**" to switching circuit 15

(part of "**drive circuit**" (§IX.A.1(d)), which is used, *inter alia*, to drive coil 19 during power/charging operations, as discussed above. (§§IX.A.1; Ex.1005, ¶¶0034-0035, 0038-0044, 0049-0077, FIG. 3; Ex.1002, ¶270.)

Consistent with known smoothing circuits, a POSITA would have understood that *Okada*'s "smoothing circuit 14" (including as implemented in the modified *Okada* system) would function as an electrical noise filter circuit that would shield switching circuit 15 (part of "**drive circuit**"), and thus also the "**DC voltage input**") from EMI from the commercial power received by PTM10 (*supra*). (Ex.1002, ¶271.) Such smoothing circuits were known to shield noise from circuitry/nodes connected to such filter. (*Id.*; Exs.1071-1072 (*supra*); Ex.1044, ¶0080, (chokes and smoothing capacitors isolate DC power supply from switching noise), FIG. 15; Ex.1066, ¶¶0013 ("To address the EMI noise issue, an EMI noise reduction circuit…adds additional capacitance to tie the output voltage to the input AC line"), 0031, 0034, FIG. 9B; Ex.1067, ¶¶0006, 0132 ("a common mode noise filter is provided for a commercial AC power supply AC…formed from…filter capacitors CL and a common mode choke coil CMC"), 0136, FIG. 1.) Thus, circuit 14 in the modified *Okada* system is an example of an "**electrical noise filter circuit coupled to the DC voltage input to shield [it] from…(EMI) during the provision of power inductively to the portable device**." (Ex.1002, ¶271.)

While the modified *Okada* combination does not expressly disclose that the "apparatus"/"system" uses a "**common mode electrical noise filter circuit**," a POSITA would have found it obvious to implement such a filter in light of *Ahn*. (Ex.1002, ¶272.)

Ahn, like *Okada* (and other asserted art) discloses an inductive charging system. (Ex.1068, Abstract, ¶¶0003, 0010-0015, 0030-0033, 0037, FIGS. 1-3, 5), and thus is similarly in the same technical field as the '371 patent. (§IX.A.1; Ex.1001, Abstract.) Likewise, *Ahn* discloses features reasonably pertinent to particular problem(s) the '371 patent inventor and a POSITA were trying to solve. (*Id.*; Ex.1001, 1:60-5:17; Ex.1002, ¶¶112-113, 273.) Therefore, a POSITA had reasons to consider/consult *Ahn* when looking to design/implement the modified *Okada* system. (Ex.1002, ¶273.) In doing so, a POSITA would have recognized that *Ahn* explains that "[i]n most electronic devices, EMI is controlled in a known manner by integrating filters, such as Y-capacitor-type filters, to protect against common-mode interference." (Ex.1068, ¶0049.) *Ahn*'s teachings are consistent with the known use of common mode filter designs for protecting against EMI (including such filters connected to commercial power supply). (Ex.1067, ¶¶0006, 0132, 0136; Ex.1002, ¶274; *see also* Ex.1069, ¶0192 (common-mode or normal-mode noise filter choke coil)

In view of *Ahn*, in context of a POSITA's state-of-art knowledge, and *Okada*'s teachings (*supra*), a POSITA would have been motivated and found obvious to configure circuit 14 (noise filter circuit) in the modified *Okada*'s system/apparatus as a "**common mode electrical noise filter circuit**" to shield the "DC voltage input" from common-mode interference, as suggested by *Ahn* and contemporaneous knowledge. (Ex.1002, ¶275; Exs.1067-1069.) Such modification would have enhanced/complimented the filtering functionalities provided by smoothing circuit 14 (*supra*) using known and available filter designs/technologies to prevent undesired EMI from detrimentally affecting the operation of switching circuit 15 or other components in PTM10 during charging operations. (Ex.1002, ¶275; §IX.A.1(a)-(b).)

A POSITA would have had the skill/rationale in implementing, and reasonable expectation of success in achieving, such a modification. (Ex.1002, ¶276.) Especially since it was known to use common mode noise filters, including those connected to commercial AC power supply (a known source of EMI noise). (*Id.*, ¶¶276; Exs.1067-1072). Thus, such modification would have involved applying known technologies/techniques to predictably yield a charger system with a modified filter circuit (*e.g.,* circuit 14) that would remove unwanted EMI noise to promote efficient operation of the inductive power transfer operations as disclosed/suggested by the modified *Okada* system. (§IX.A.1). *KSR* at 416-18.

D. Ground 4: Claim 16 is obvious over *Okada* in view of *Odendaal*, *Kook*, *Calhoon*, *Black*, *Shima*, *Cho*, and *Hui-027*

1. Claim 16

a) [16(a)]

For similar reasons discussed for claims 1 and 9, it would have been obvious to configure primary coil 19 in *Okada-Odendaal-Kook-Calhoon-Black* (§IX.A.1) in view of *Odendaal-Shima* to have "**multiple layers of copper PCB…**" of limitation 16(a). (§§IX.A.1; IX.A.2(b)-(c); Ex.1002, ¶¶277-278.)

b) [16(b)]

Okada-Odendaal-Kook-Calhoon-Black-Shima discloses/suggests this limitation for similar reasons explained for claims 1 and 9. (Ex.1002, ¶279; §§IX.A.1-IX.A.2, IX.D.1(a).) As discussed for limitation 1(c) and claim 9, it would have been obvious to modify primary coil 19 as a multi-layer copper PCB planar coil placed in parallel with the surface of the system/receiver coil 41 (§§IX.A.1(c); IX.A.2(b)-(c).) Modified coil would have an "**outer surface**" facing coil 41 for inductive powering/charging, and an "**inner surface**" (*e.g.,* opposite side of coil) facing away from coil 41, like that claimed. (*Id.*; Ex.1002, ¶279.)

c) [16(c)]

Okada-Odendaal-Kook-Calhoon-Black-Shima discloses/suggests this limitation. (Ex.1002, ¶¶280-282; §§IX.A.1-IX.A.2; §IX.D.1(a)-(b).)

Consistent with *Odendaal*, *Shima*, POSITA's knowledge, and the *Okada* modification above (§IX.A.1(c)), *Kook* describes primary coil 70 "composed of any one of…**PCB**, **coil** and ferrite **core**…in a flat…shape…." (Ex.1059, ¶0076, *id.* ¶¶0009, 0012, 0033, 0041-42.) Thus, it would have been obvious to configure the modified multi-layer copper PCB planar coil 19 in the modified system (§§IX.A.1(c), IX.A.2(b)-(c)) to have a central ferrite core/area ("**a ferromagnetic core located in a central area of the first primary coil**") in order to improve the charging efficiency, consistent with contemporaneous knowledge. (Ex.1002, ¶281; Ex.1061, 18:20-24.)

A POSITA would have had the skill/knowledge/rationale in implementing, and expectation of success in achieving, the above-modification, especially given the use/benefits of a ferrite core/material in planar coils was known. (Ex.1002, ¶282; Ex.1059, ¶0009; Ex.1061, 17:10-23:13, FIG. 11.) As such, a POSITA had the motivation/skills in configuring, and a reasonable expectation of success in achieving, the above-modification, especially in light of *Kook*, *Odendaal,* POSITA's state-of-the-art-knowledge using ferrite material to enhance inductive energy transfer efficiency. (Ex.1002, ¶282.) *KSR* at 416-18.

d) [16(d)]

Okada-Odendaal-Kook-Calhoon-Black-Shima in view of *Cho* discloses/suggests this limitation. (Ex.1002, ¶¶283-289; §IX.A.1; §IX.D.1(a)-(c).) While above-modified *Okada* does not expressly disclose "**a planar ferromagnetic layer** located **proximate** to the **inner surface** of **the first primary coil**," a POSITA would have found it obvious to implement such features in view of *Cho*. (Ex.1002, ¶283.)

Cho discloses features/configurations for contactless powering/charging a battery and thus is in the same technical field as the '371 patent and discloses features reasonable pertinent to particular problem(s) the inventor/'371 patent /POSITA were trying to solve. (Ex.1061, Abstract, 1:5-18, 1:35-2:14, 17:10-23:13; §IX.A.1(a); Ex.1001, 1:50-5:17, 16:32-49; Ex.1002, ¶284.) Therefore, a POSITA had reasons to consider/consult *Cho* in context of the *Okada-Odendaal-Kook-Calhoon-Black-Shima* combination. (Ex.1002, ¶¶114-117, 284.)

Cho discloses using ferrite sheets for implementing planar primary coils in a charger. (Ex.1061, 22:4-12, FIG. 11; Ex.1002, ¶285.)

FIG. 11

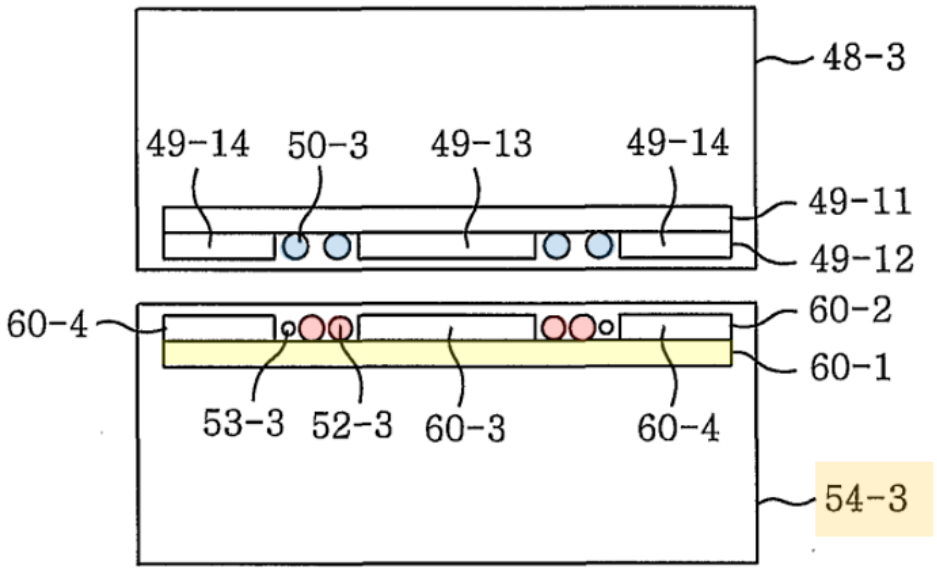

Charger 54-3 includes a "planar type" primary circuit, a "main winding 52-3" and "two ferrite sheets 60-1 and 60-2" (including central protrusion part 60-3), wherein winding 52-3 is wound around the central protrusion 60-3. (Ex.1061, 22:13-28, FIG. 11.) Winding 52-3's surface facing ferrite sheet 60-1 also faces away from receiver coil 50-3 (blue). (*Id.*, FIG. 11.) Ferrite sheet 60-1 (yellow) is proximate to winding 52-3 (red) ("**a planar ferromagnetic layer** located **proximate** to the **inner surface** of **the first primary coil**"). (Ex.1002, ¶286.)

In light of such teachings/suggestions, a POSITA would have been motivated and found it obvious to implement configure the *Okada-Odendaal-Kook-Calhoon-Black-Shima* system with a planar ferromagnetic layer located proximate to the inner

surface of the first primary coil. A POSITA would have appreciated *Cho*'s guidance associated with forming planar charger coils using ferrite material/layers/sheets and been motivated to implement similar features in the *Okada-Odendaal-Kook-Calhoon-Black-Shima* system, and done so with a reasonable expectation of success. (Ex.1002, ¶287.)

A POSITA would have also understood that the planar ferromagnetic layer located proximate to the inner surface of the first primary coil, similar to that discussed in *Cho*, would have shielded charger circuits from the electromagnetic fields, *e.g.*, those generated by the primary coil. (Ex.1002, ¶288.) Such a feature would have reduced/minimized the electromagnetic field's detrimental effects on the charger's circuits, *e.g.*, unwanted radiations and heat on the circuits, causing faulty signals, reduced reliability, and service life. (Ex.1002, ¶288.)

A POSITA would have had the skill/rationale/knowledge in implementing, and reasonable expectation of success in achieving, such modification. (Ex.1002, ¶289.) Especially since it would have involved applying known technologies/techniques to yield the predictable result of shielding a portable device's circuits from electromagnetic fields, consistent with *Cho*. (Ex.1002, ¶289.) *KSR* at 416-18.

e) [16(e)]

Okada-Odendaal-Kook-Calhoon-Black-Shima-Cho in view of *Hui-027* discloses/suggests this limitation. (Ex.1002, ¶¶290-294; §IX.A.1; §IX.A.2(c); §IX.D.1(a)-(d).)

While the modified *Okada* combination does not expressly state that a metallic layer located proximate to the planar ferromagnetic layer that is located between the first primary coil and the metallic layer, a POSITA would have found it obvious to implement such features in view of *Hui-027*. (Ex.1002, ¶291; §§IX.A.2(c), IX.D.1(a)-(d).)

In addition to above (§IX.A.2(c)), *Hui-027* discloses a metallic layer located proximate to the planar ferromagnetic layer located between the first primary coil and the metallic layer. For example, FIGS. 3a-3b illustrate a "primary winding," a "copper sheet," and a "ferrite plate" next to the "copper sheet" and in between the "primary winding" and the "copper sheet," (Ex.1064, FIGS. 3a-3b (below); Ex.1002, ¶¶106-108, 292.)

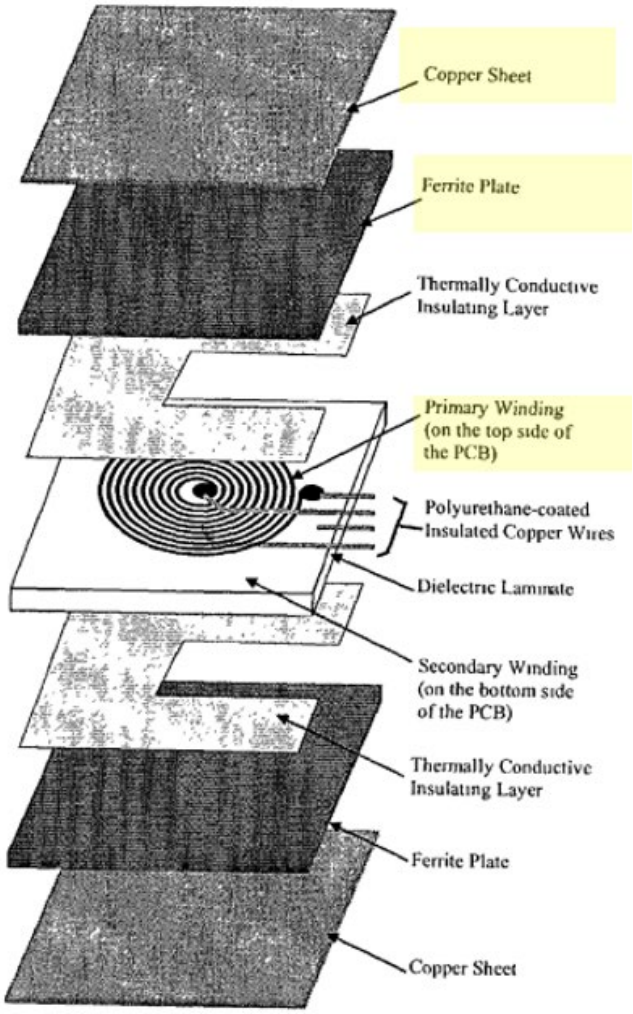
Copper Sheet
Ferrite Plate
Thermally Conductive Insulating Layer
Primary Winding (on the top side of the PCB)
Polyurethane-coated Insulated Copper Wires
Dielectric Laminate
Secondary Winding (on the bottom side of the PCB)
Thermally Conductive Insulating Layer
Ferrite Plate
Copper Sheet

Fig. 3a.

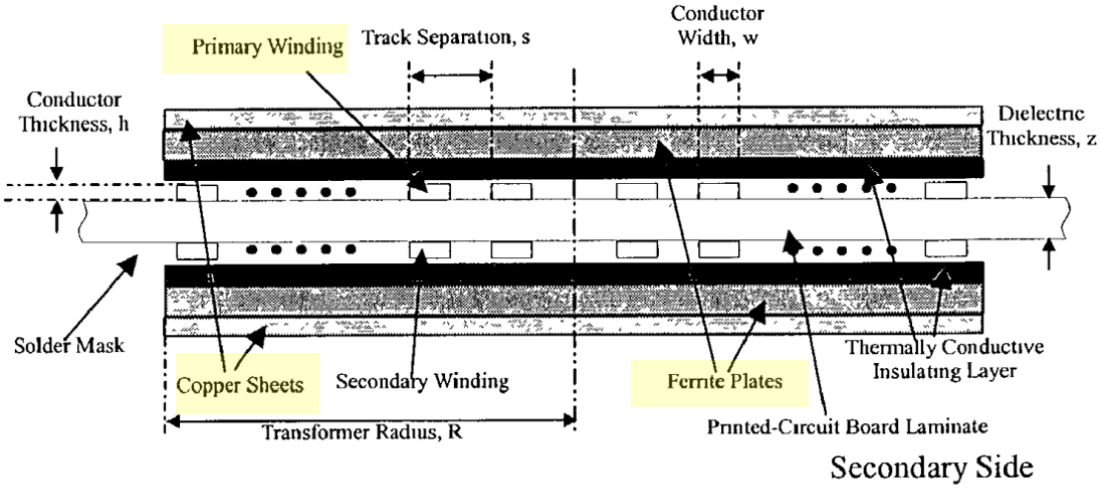

Fig. 3b.

In view of such teachings, a POSITA would have been motivated and found obvious to configure/implement the above modified *Okada* system (§§IX.D.1(a)-(d)) to further include a "**metallic layer**" located proximate to the above disclosed "**planar ferromagnetic layer**" such that the ferromagnetic layer is "**located between the first primary coil and the metallic layer**" to increase the shielding effectiveness of the coil arrangement, while not significantly diminishing the transformer energy efficiency, as suggested by *Hui-027* and contemporaneous knowledge. (Ex.1064, ¶¶0049, 0067-0068; Ex.1002, ¶293; *see also* Ex.1001, 53:8-15 (acknowledging "Metallic and/or Ferromagnetic layers are often included in electronic devices to reduce their EM emission").) A POSITA would have appreciated the versatility in applications taught by *Okada* (§IX.A.1(a)) and known PCB coil designs with known layers (*Hui-027*, *Shima*, *Odendaal*), and thus been motivated to implement such modification with the primary coil arrangements in the

system applications contemplated *Okada* (as modified). (§IX.A.1(a)-(c); IX.A.2, IX.D.1(a)-(d); Ex.1002, ¶293.)

A POSITA would have had the skill/rationale in implementing, and reasonable expectation of success in achieving, such a modification, especially since the beneficial effects of using ferrite layers and metallic layers in coil designs were known. (Ex.1002, ¶¶294.) Thus, such modification would have involved applying known technologies/techniques to yield the predictable result of providing a "system" with a primary coil arrangement having a coil-ferrite sheet-metallic sheet stack that would have improved/enhanced performance/operations of the modified *Okada* system. (Ex.1002, ¶¶294-296.) *KSR* at 416-18.

X. DISCRETIONARY DENIAL IS NOT APPROPRIATE

Discretionary denial under Section 325(d) is inappropriate here given the prior art combinations/arguments raised during prosecution are not the same or substantially similar to the presented grounds. The Office did not consider *Okada* with the other asserted prior art. (*Generally* Ex.1004; Ex.1001, Cover.) *Okada* discloses/suggests many claimed features, and thus is relevant to the patentability of the challenged claim(s), especially when considered in context of the asserted obviousness positions. (§IX.) The examiner also did not have the benefit of expert testimony to support the presented teachings/suggestions. (Ex.1002.) The examiner erred in allowing the claims without considering teachings/suggestions in prior art asserted here (*see* §IX). (Ex.1004, 729-737.) Had the examiner done so, the challenged claims would have likely not have issued.[11]

This is true despite *Symons*, the issued patent from *Calhoon* (Ex.1041) (and other patent references by "Calhoon"), the issued patent from *Hui-027* (Ex.1064), a Korean version (KR-100836634) of *Kook* (Ex.1059) and a published application with *Okada* as a co-inventor (Ex.1019) having some overlapping subject matter, were cited during prosecution. (Ex.1001, Cover; Ex.1004.) As with other submitted

[11] Petitioner reserves the right to seek leave to respond to any §325(d) (and §314) arguments PO may raise to avoid institution.

references, the examiner erred in a manner pertinent to the patentability of the challenged claims by failing to consider and apply the similar teachings by each of *Okada*, *Symons*, *Hui-027, Calhoon,* and *Kook* alone or in combination with other prior art. *Hui-027* at least discloses features in claim 9, and *Calhoon* and *Kook*, respectively at least discloses features in limitations 1(i) and 1(d), and thus should have been considered in combination with other pertinent references (*Okada*). (§IX.A.)

Furthermore, an evaluation of the *Fintiv* factors favors institution.

The **first factor** (stay) is neutral, because Samsung has not yet moved for a stay. *See Hulu LLC v. SITO Mobile R&D IP, LLC et al.*, IPR2021-00298, Paper 11 at 10-11 (P.T.A.B. May 19, 2021).

The **second factor** (proximity) is neutral. "The PTAB will weigh this factor against exercising discretion to deny institution under *Fintiv* if the median time-to-trial is around the same time or after the projected statutory deadline for the PTAB's final written decision" (FWD). (Ex.1051, 9.) The median time-to-trial in the Eastern District of Texas is 19 months, meaning trial will be *no earlier* than May 2024 (Ex.1052, 35), is close to the court's scheduled jury selection for August 5, 2024 (Ex.1053, 1). With this petition filed in June 2023, a FWD may be expected by December 2024, not long after the trial date.

That the FWD may come after the trial date is not dispositive. The Board has granted institution in cases where the FWD issued months after the scheduled trial date. The Board has relied on various justifications, such as diligence in filing the petition, a stipulation not to pursue the asserted grounds in litigation, minimal investment in litigation, and the merits of the invalidity challenge were strong. *Verizon Business Network Services, Inc. v. Huawei Techs. Co.*, IPR2020-01141, Paper 12 (Jan. 14, 2021). The same factors are present here as Petitioner diligently filed this petition (challenging long, convoluted claims) in advance of the one-year bar date and within four months of PO's infringement contentions in the Texas Litigation. (Exs.1018, 1022.) Fact discovery is not anticipated to close until March 18, 2024. (Ex.1053, 3.) Expert discovery has not yet started. (*Id.*) The *Markman* hearing is scheduled for February 6, 2024. (*Id.*)

The **third factor** (investment) also weighs against denial. The district court case is in the early stages. Fact discovery is in its infancy and the parties have not engaged in expert discovery. (*Id.*, 3.) The parties have not yet identified terms for construction. (*Id.*, 4-6.) Nor have there been any substantive orders in this case.

The **fourth factor** (overlap) also weighs against denial. Petitioner hereby stipulates that, if the IPR is instituted, Petitioner will not pursue the IPR grounds in the district court litigation. Thus, "[i]nstituting trial here serves overall system efficiency and integrity goals by not duplicating efforts and by resolving materially

different patentability issues." *Apple, Inc. v. SEVEN Networks, LLC*, IPR2020-00156, Paper 10 at 19 (P.T.A.B. June 15, 2020); *see also Sand Revolution II, LLC v. Continental Intermodal Group-Trucking LLC*, IPR2019-01393, Paper 24 at 12 (P.T.A.B. June 16, 2020).

While the **fifth factor** (parties) may weigh slightly in favor of denial, because the Petitioner and PO are the same parties as in district court, based on a "holistic view," the factors favor institution. *Samsung Elecs. Co. Ltd. v. Dynamics Inc.*, IPR2020-00505, Paper 11 at 15 (P.T.A.B. Aug. 12, 2020).

Indeed, this petition presents compelling merits. *See Commscope Tech. LLC v. Dali Wireless, Inc.*, IPR2022-01242, Paper 23 at 4-5 (P.T.A.B. Feb. 27, 2023) (precedential). The asserted combination of multiple prior art teachings highlight the claimed compilation of known/conventional technologies/techniques. *In re Gorman*, 933 F.2d at 986. (§IX.) Moreover, this Petition is the ***sole*** challenge to the identified challenged claims before the Board—a "crucial fact" favoring institution. *Google LLC v. Uniloc 2017 LLC*, IPR2020-00115, Paper 10 at 6 (May 12, 2020).

XI. CONCLUSION

Accordingly, Petitioner requests institution of IPR for the challenged claims.

Respectfully submitted,

Dated: June 30, 2023

By: /Joseph E. Palys/
Joseph E. Palys (Reg. No. 46,508)
Counsel for Petitioner

XII. APPENDIX A (CLAIM LISTING)[12]

Claim 1

[1(a)] An apparatus comprising:

[1(b)] a system for providing power inductively to a portable device comprising a battery and an inductive receiver unit including a receiver coil and a receiver circuit, the system comprising:

[1(c)] a first primary coil that is substantially planar and substantially parallel to a surface of the system for providing power inductively to the portable device;

[1(d)]

[1(d)(1)] a first drive circuit, including a FET driver, a capacitor, and a FET switch, coupled to a DC voltage input and coupled to the first primary coil,

[1(d)(2)] wherein during operation the first drive circuit is configured to apply an alternating electrical current to the first primary coil at an operating frequency and duty cycle to generate an alternating

[12] 37 C.F.R. 42.24(1) ("The word count…does not include…[an] appendix of exhibits or claim listing.")

magnetic field in a direction substantially perpendicular to the plane of the first primary coil and the surface of the system to provide power inductively to the portable device,

[1(d)(3)] wherein the operating frequency is within a range of frequencies (i) that are near a resonance frequency of a circuit comprising the first primary coil and the capacitor, (ii) such that increasing values of the operating frequency within the range of frequencies would correspond to a lower voltage or current induced in an output of the receiver circuit and (iii) that allow activation and powering of the receiver unit and charging the battery of the portable device;

[1(e)] a first sense circuit to monitor current flow through the first primary coil during operation of the first drive circuit, wherein the first sense circuit includes a low pass filter and an amplifier to assist in detecting and amplifying a signal corresponding to a current modulation in the first primary coil induced by modulation of current in the receiver coil; and

[1(f)] a communication and control circuit, including a microcontroller coupled to the first drive circuit and the first sense circuit, configured to:

[1(g)] detect, through the first sense circuit, a received communication of information in the current modulation in the first primary coil;

[1(h)] operate the first drive circuit to inductively transfer power from the first primary coil to the receiver coil to activate and power the receiver unit to enable the receiver circuit to communicate the information detected in the current modulation in the first primary coil, wherein the communication of information includes information to enable the communication and control circuit to configure the inductive transfer of power to the portable device,

[1(i)] wherein the received communication of information includes: information corresponding to a voltage or current induced by the first primary coil at the output of the receiver circuit; a unique identification code; a manufacturer code; a charge algorithm profile; and a power requirement; and

[1(j)] operate the first drive circuit according to the power requirement and charge algorithm profile to provide the power from the first primary coil to the receiver coil to power the receiver unit and charge the battery of the portable device,

[1(k)] wherein to charge the battery of the portable device the communication and control circuit is further configured to: receive additional information in the current modulation in the first primary coil from the modulation of the current in the receiver coil corresponding to the voltage or current at the output of the receiver circuit while charging the battery of the portable device;

[1(l)] regulate in a closed loop feedback manner the voltage or current at the output of the receiver circuit in accordance with the received additional information corresponding to the voltage or current at the output of the receiver circuit by adjusting at least one of the operating frequency and the duty cycle of the first drive circuit while charging the battery of the portable device;

[1(m)] monitor for continued presence of the portable device and completion of the charging of the battery of the portable device based on the communication from the receiver circuit and detected by the communication and control circuit through the first sense circuit; and

[1(n)] if the portable device is no longer present or charging is complete, stop operation of the first drive circuit for the provision of power inductively to the portable device.

Claim 9

[9(a)] The apparatus of claim 1, further comprising a near field communication (NFC) antenna for communication of data, and further wherein:

[9(b)] the first primary coil comprises a Printed Circuit Board (PCB) coil;

[9(c)] the PCB coil comprises multiple layers of substantially similar copper thickness and substantially similar spiral-shaped coil patterns connected by vias wherein each layer comprises 1 to 4 ounce (oz) copper thickness material; and

[9(d)] the operating frequency is within a range of 100 kHz to 1 MHz.

Claim 10

[10(a)] The apparatus of claim 1, wherein: the system further comprises a near field communication (NFC) antenna for communication of data;

[10(b)] the first primary coil comprises a copper PCB coil structure;

[10(c)] the PCB coil structure includes a substantially spiral-shaped pattern of multiple coil layers;

[10(d)] each of the multiple coil layers comprises a PCB coil having an inner port and an outer port;

[10(e)] the inner ports of each of the coil layers are coupled together by vias and form a first common pad;

[10(f)] the outer ports of the coil layers are coupled together by vias and form a second common pad; and

[10(g)] the two common contact pads provide electrical coupling of the first primary coil for applying the alternating electrical current to the first primary coil.

Claim 15

[15] The apparatus of claim 1 further comprising a common mode electrical noise filter circuit coupled to the DC voltage input to shield the DC voltage input from Electromagnetic Interference (EMI) during the provision of power inductively to the portable device.

Claim 16

[16(a)] The apparatus of claim 1 wherein: the first primary coil includes multiple layers of copper PCB of similar spiral-shaped coil pattern interconnected by vias; and

[16(b)] the first primary coil includes an outer surface to face a surface of the receiver coil and an inner surface to face away from the surface of the receiver coil; and

[16(c)] the system further comprises: a ferromagnetic core located in a central area of the first primary coil;

[16(d)] a planar ferromagnetic layer located proximate to the inner surface of the first primary coil; and

[16(e)] a metallic layer located proximate to the planar ferromagnetic layer, wherein the ferromagnetic layer is located between the first primary coil and the metallic layer.

CERTIFICATE OF COMPLIANCE

Pursuant to 37 C.F.R. § 42.24(d), the undersigned certifies that the foregoing Petition for *Inter Partes* Review of U.S. Patent No. 11,316,371 contains, as measured by the word-processing system used to prepare this paper, 13,983 words. This word count does not include the items excluded by 37 C.F.R. § 42.24 as not counting towards the word limit.

Respectfully submitted,

Dated: June 30, 2023

By: /Joseph E. Palys/
Joseph E. Palys (Reg. No. 46,508)
Counsel for Petitioner

CERTIFICATE OF SERVICE

I hereby certify that on June 30, 2023, I caused a true and correct copy of the foregoing Petition for *Inter Partes* Review of U.S. Patent No. 11,316,371 and supporting exhibits to be served via express mail on the Patent Owner at the following correspondence address of record as listed on PAIR:

115007 – NK Patent Law
4101 Lake Boone Trail
Suite 218
Raleigh, NC 27607

By: /Joseph E. Palys/
Joseph E. Palys (Reg. No. 46,508)