UNITED STATES PATENT AND TRADEMARK OFFICE

BEFORE THE PATENT TRIAL AND APPEAL BOARD

SAMSUNG ELECTRONICS CO., LTD.
Petitioner

v.

MOJO MOBILITY INC.
Patent Owner

Patent No. 11,316,371

PETITION FOR *INTER PARTES* REVIEW
OF U.S. PATENT NO. 11,316,371

TABLE OF CONTENTS

I. INTRODUCTION 1

II. MANDATORY NOTICES 1

III. PAYMENT OF FEES 2

IV. GROUNDS FOR STANDING 2

V. PRECISE RELIEF REQUESTED AND GROUNDS 2

VI. LEVEL OF ORDINARY SKILL 4

VII. THE '371 PATENT 5

VIII. CLAIM CONSTRUCTION 5

IX. DETAILED EXPLANATION OF GROUNDS 7

A. Ground 1: Claims 20 and 22 are obvious over *Okada*, *Odendaal*, *Cho*, *Tetlow*, *Nguyen*, *Berghegger*, *Calhoon*, and *Black* 7

1. Claim 20 7

2. Claim 22 62

B. Ground 2: Claim 21 is obvious over *Okada*, *Odendaal*, *Cho*, *Tetlow*, *Nguyen*, *Berghegger*, *Calhoon*, *Black*, and *Labrou* 65

1. Claim 21 65

C. Ground 3: Claim 23 is obvious over *Okada*, *Odendaal*, *Cho*, *Tetlow*, *Nguyen*, *Berghegger*, *Calhoon*, *Black*, and *Meadows* 69

1. Claim 23 69

D. Ground 4: Claim 30 is obvious over *Okada*, *Odendaal*, *Cho*, *Meadows*, and *Berghegger* 73

1. Claim 30 73

X. DISCRETIONARY DENIAL IS NOT APPROPRIATE 82

XI. CONCLUSION.....86

LIST OF EXHIBITS

Ex. 1001	U.S. Patent No. 11,316,371
Ex. 1002	Declaration of R. Jacob Baker, Ph.D., P.E.
Ex. 1003	Curriculum Vitae of R. Jacob Baker, Ph.D., P.E.
Ex. 1004	Prosecution History of U.S. Patent No. 11,316,371
Ex. 1005	Translation of Japanese Patent Application Publication No. 2006-141170A ("*Okada*")[1]
Ex. 1006	U.S. Patent No. 6,912,137 ("*Berghegger*")
Ex. 1007	U.S. Patent Application Publication No. 2006/0145660A1 ("*Black*")
Ex. 1008	U.S. Patent No. 6,960,968 ("*Odendaal*")
Ex. 1009	U.S. Patent No. 6,489,745 ("*Koreis*")
Ex. 1010	U.S. Patent No. 6,366,817 ("*Kung*")
Ex. 1011	Physics, Henry Semat et al., Rinehart & Co., Inc., 1958, Chapters 29-32 ("*Semat*")
Ex. 1012	U.S. Patent No. 5,702,431 ("*Wang*")
Ex. 1013	International Patent Application Publication No. WO1996040367 ("*WangII*")
Ex. 1014	Handbook of Radio and Wireless Technology, Stan Gibilisco, McGraw-Hill, 1999 ("*Gibilisco*")
Ex. 1015	U.S. Patent No. 4,942,352 ("*Sano*")

[1] Exhibit 1005 includes the original Japanese version and a certified English translation. Citations to *Okada* are to the English translation.

Ex. 1016	Fundamentals of Electric Circuits, 2d., Charles Alexander et al., McGraw-Hill, 2004 ("*Alexander*")
Ex. 1017	International Patent Application Publication No. WO1994/18683 ("*Koehler*")
Ex. 1018	Mojo Mobility's Infringement Chart for U.S. Patent No. 11,316,371 (Ex. 4) accompanying Mojo Mobility's Infringement Contentions in *Mojo Mobility Inc. v. Samsung Elecs. Co., Ltd.*, No. 2:22-cv-00398 (E.D. Tex.) (February 28, 2023)
Ex. 1019	U.S. Patent Application Publication No. 2005/0068019 ("*Nakamura*")
Ex. 1020	U.S. Patent Application Publication No. 2007/0109708 ("*Hussman*")
Ex. 1021	RESERVED
Ex. 1022	Mojo Mobility's Infringement Contentions in *Mojo Mobility Inc. v. Samsung Elecs. Co., Ltd.*, No. 2:22-cv-00398 (E.D. Tex.) (February 28, 2023)
Ex. 1023	U.S. Patent Application Publication No. 2004/0201988 ("*Allen*")
Ex. 1024	U.S. Patent No. 7,378,817 ("*Calhoon-817*")
Ex. 1025	International Patent Application Publication No. WO2003/096361 ("*Cheng*")
Ex. 1026	International Patent Application Publication No. WO2004/038888 ("*ChengII*")
Ex. 1027	Spiral Inductor Design for Quality Factor, Sang-Gug Lee et al., Journal of Semiconductor Technology and Science, Vol. 2. No. 1, March 2002 ("*Lee*")
Ex. 1028	U.S. Patent Application Publication No. 2001/0055207 ("*Barbeau*")
Ex. 1029	AN710 Antenna Circuit Design for RFID Applications
Ex. 1030	U.S. Patent No. 6,606,247 ("*Credelle*")

Ex. 1031	RESERVED
Ex. 1032	RESERVED
Ex. 1033	RESERVED
Ex. 1034	RESERVED
Ex. 1035	RESERVED
Ex. 1036	International Patent Application Publication No. WO2003/105308A1 ("*Hui*")
Ex. 1037	U.S. Patent No. 5,780,992 ("*Beard-1*")
Ex. 1038	RESERVED
Ex. 1039	U.S. Patent No. 5,631,539 ("*Beard-2*")
Ex. 1040	RESERVED
Ex. 1041	U.S. Patent Application Publication No. 2005/0127868A1 ("*Calhoon*")
Ex. 1042	RESERVED
Ex. 1043	RESERVED
Ex. 1044	U.S. Patent Application Publication No. 2007/0145830A1 ("*Lee-II*")
Ex. 1045	RESERVED
Ex. 1046	RESERVED
Ex. 1047	U.S. Patent Application Publication No. 2006/0202665 ("*Hsu*")
Ex. 1048	International Patent Application Publication No. WO2009155000A2 ("*Lin*")
Ex. 1049	U.S. Patent Application Publication No. 2008/0067874 ("*Tseng*")
Ex. 1050	U.S. Patent No. 9,356,473 ("*Ghovanloo*")

Ex. 1051	Memorandum from Director Vidal (June 21, 2022)
Ex. 1052	Federal Court Management Statistics (December 2022)
Ex. 1053	Docket Control Order of March 28, 2023, *Mojo Mobility Inc. v. Samsung Elecs. Co., Ltd.*, No. 2:22-cv-00398 (E.D. Tex.)
Ex. 1054	RESERVED
Ex. 1055	RESERVED
Ex. 1056	U.S. Patent No. 6,459,383 ("*Delatorre*")
Ex. 1057	International Patent Application Publication No. WO1999050806A1 ("*Cunningham*")
Ex. 1058	International Patent Application Publication No. WO2004026129A1 ("*Due-Hansen*")
Ex. 1059	U.S. Patent Application Publication No. 2009/0261778 ("*Kook*")
Ex. 1060	U.S. Patent Application Publication No. 2003/0195581A1 ("*Meadows*")
Ex. 1061	International Patent Application Publication No. WO2002/37641 ("*Cho*")
Ex. 1062	U.S. Patent Application Publication No. 2007/0022058 ("*Labrou*")
Ex. 1063	ATMEL e5530 Data Sheet (2002)
Ex. 1064	U.S. Patent Application Publication No. 2009/0243799A1 ("*Tetlow*")
Ex. 1065	U.S. Patent Application Publication No. 2003/0143963A1 ("*Pistor*")
Ex. 1066	U.S. Patent Application Publication No. 2002/0166073A1 ("*Nguyen*")
Ex. 1067	U.S. Patent Application Publication No. 2006/0119418A1 ("*Merandat*")
Ex. 1068	RESERVED

Ex. 1069	RESERVED
Ex. 1070	RESERVED
Ex. 1071	RESERVED
Ex. 1072	RESERVED
Ex. 1073	RESERVED
Ex. 1074	RESERVED
Ex. 1075	Watson, J., Mastering Electronics, Third Ed., McGraw-Hill, Inc. (1990) ("Watson")
Ex. 1076	Sedra, A., et al., Microelectronic Circuits, Fourth Ed., Oxford University Press (1998) ("Sedra")
Ex. 1077	GB Patent Application Publication No. 2202414 ("Logan")
Ex. 1078	U.S. Patent No. 7,226,442 ("Sheppard")

I. INTRODUCTION

Samsung Electronics Co., Ltd. ("Petitioner") requests *inter partes* review of claims 20-23, and 30 ("challenged claims") of U.S. Patent No. 11,316,371 ("the '371 patent") (Ex. 1001) assigned to Mojo Mobility Inc. ("PO"). For the reasons below, the challenged claims should be found unpatentable and canceled.

II. MANDATORY NOTICES

Real Parties-in-Interest: Petitioner identifies the following as the real parties-in-interest: Samsung Electronics Co., Ltd., and Samsung Electronics America, Inc.

Related Matter: The '371 patent is at issue in the following matter(s):

- *Mojo Mobility Inc. v. Samsung Electronics Co., Ltd.*, No. 2-22-cv-00398 (E.D. Tex.) (asserting the '371 patent and also U.S Patent Nos. 9,577,440, 11,292,349, 11,201,500, 7,948,208, 11,342,777, and 11,462,942) ("Texas Litigation").
- Petitioner is filing concurrently herewith petitions for *inter partes* review challenging other claims of the '371 patent.

The '371 patent originates from U.S. Patent Application No. 17/507,323, filed on Oct. 21, 2021, which is a continuation or continuation-in-part of a sequence of applications dated as early as Jan. 30, 2007. (Ex. 1001, Cover.) The '371 patent also lists multiple provisional applications dated as early as Jan. 31, 2006. (*Id.*)

Counsel and Service Information: Lead counsel: Joseph E. Palys (Reg. No. 46,508), and Backup counsel are (1) Naveen Modi (Reg. No. 46,224), (2) Howard Herr (*pro hac vice* admission to be requested). Service information is Paul Hastings LLP, 2050 M St., Washington, D.C., 20036, Tel.: 202.551.1700, Fax: 202.551.1705, email: PH-Samsung-MojoMobility-IPR@paulhastings.com. Petitioner consents to electronic service.

III. PAYMENT OF FEES

The PTO is authorized to charge any fees due during this proceeding to Deposit Account No. 50-2613.

IV. GROUNDS FOR STANDING

Petitioner certifies that the ’371 patent is available for review and Petitioner is not barred or estopped from requesting review on the grounds identified herein.

V. PRECISE RELIEF REQUESTED AND GROUNDS

The challenged claims should be canceled as unpatentable based on the following grounds:

Ground 1: Claims 20 and 22 are unpatentable under 35 U.S.C. § 103(a) as obvious over *Okada*, *Odendaal*, *Cho*, *Tetlow*, *Nguyen*, *Berghegger*, *Calhoon*, and *Black*;

Ground 2: Claim 21 is unpatentable under 35 U.S.C. § 103(a) as obvious over *Okada*, *Odendaal*, *Cho*, *Tetlow*, *Nguyen*, *Berghegger*, *Calhoon*, *Black*, and *Labrou*;

Ground 3: Claim 23 is unpatentable under 35 U.S.C. § 103(a) as obvious over *Okada*, *Odendaal*, *Cho*, *Tetlow*, *Nguyen*, *Berghegger*, *Calhoon*, *Black*, and *Meadows*; and

Ground 4: Claim 30 is unpatentable under 35 U.S.C. § 103(a) as obvious over *Okada*, *Odendaal*, *Cho*, *Meadows*, and *Berghegger*.

In the Texas Litigation, PO identified the following priority dates for the challenged claims (and possibly up to three months earlier):

(a) 7/30/2007: claims 20-22; and

(b) 12/12/2007: claims 23, 30.

(Ex. 1022, 6-8.) Without conceding such dates are appropriate, Petitioner assumes for this proceeding those are the effective date(s) for the challenged claims. The asserted prior art herein qualifies as prior art as follows:

Okada (published: 6/1/2006)	§102(b)
Labrou (filed: 07/18/2006; published: 01/25/2007)	§§102(a), 102(e)
Odendaal (filed: 6/26/2002; issued: 11/1/2005)	§§102(b), 102(e)
Black (filed: 12/8/2005; published: 7/6/2006)	
Nguyen (filed: 05/2/2001; published: 11/7/2002)	

Calhoon (filed: 12/12/2003; published 06/16/2005)	
Berghegger (filed 11/28/2002; issued 6/28/2005)	
Cho (filed 11/6/2001; published 05/10/2002)	
Meadows (filed 4/18/2003; published 10/16/2003)	
Tetlow (filed: 06/22/2006; published: 10/1/2009)	§102(e)

None of these references were considered during prosecution, except the issued patent corresponding to *Calhoon* was submitted but not applied. (Ex. 1001, cover; *infra* §X.)

VI. LEVEL OF ORDINARY SKILL

A person of ordinary skill in the art as of the claimed priority date of the ’371 patent (“POSITA”) would have had at least a master’s degree in electrical engineering, or a similar discipline, and two or more years of experience with wireless charging systems, including, for example, inductive power transfer systems.

(Ex. 1002, ¶¶20-21.)[2] More education can supplement practical experience and vice versa. (*Id.*)

VII. THE '371 PATENT

During prosecution, in response to objections/rejections (Ex. 1004, 387-406, 632-636), the applicant eventually submitted new claims (*id.*, 600-628, 694-727.) The claims were subsequently allowed because allegedly "the prior art fails to teach or suggest" features associated with the claimed "communication and control circuit" and "regulate" features (*id.*, 733-737). However, those features, and others, recited in the challenged claims relate to a compilation of conventional components/features that were disclosed/suggested by the prior art combinations herein. *See In re Gorman*, 933 F.2d 982, 986 (Fed. Cir. 1991). (*Infra* §IX; Ex. 1002, ¶¶22-65, 69-237; Exs. 1005-1017, 1019-1020, 1023-1030, 1036-1037, 1039, 1041, 1044, 1047-1050, 1056-1067, 1075-1078.)

VIII. CLAIM CONSTRUCTION

The Board only construes the claims when necessary to resolve the underlying controversy. *Toyota Motor Corp. v. Cellport Systems, Inc.*, IPR2015-00633, Paper No. 11 at 16 (Aug. 14, 2015). For purposes of this proceeding, Petitioner believes

[2] Petitioner submits the declaration of R. Jacob Baker, Ph.D., P.E. (Ex. 1002), an expert in the field of the '371 patent. (Ex. 1002, ¶¶1-13; Ex. 1003.)

that no special constructions are necessary to assess whether the challenged claims are unpatentable over the asserted prior art.[3] (Ex. 1002, ¶68.)

[3] Petitioner reserves all rights to raise claim construction and other arguments, including challenges under 35 U.S.C. §112, in district court as relevant to those proceedings. *See, e.g.*, *Target Corp. v. Proxicom Wireless, LLC*, IPR2020-00904, Paper 11 at 11–13 (Nov. 10, 2020). A comparison of the claims to any accused products in litigation may raise controversies that are not presented here given the similarities between the references and the patent.

IX. DETAILED EXPLANATION OF GROUNDS[4]

A. Ground 1: Claims 20 and 22 are obvious over *Okada*, *Odendaal*, *Cho*, *Tetlow*, *Nguyen*, *Berghegger*, *Calhoon*, and *Black*

1. Claim 20

a) A portable device comprising:

b) a battery; and a receiver unit, coupled to the battery, configured to receive inductive power from an inductive charging system including a base unit with a primary coil and associated circuit, the receiver unit comprising:

Okada discloses preamble 20(a) to the extent limiting, and limitation 20(b). (Ex. 1002, ¶¶70-84, 117-124; §§IX.A.1(c)-(m).) *Okada* discloses a "mobile-enabled electronic device[]" (*e.g.*, PDA3) ("**portable device**") including a rechargeable "**battery**." (Ex. 1005, Abstract, ¶¶0001, 0009, 0012, FIG. 2, ¶¶0015, 0034-0037, FIG. 14, ¶¶0134-0136, FIG. 15, ¶¶0138-0140, FIG. 16, ¶¶0142-0144, claim 4; Ex. 1002, ¶119.)

PDA3 ("**portable device**") (green (FIG. 1 below)) receives inductive power from cradle 4 (with wire/plug 6/7, LEDs 5) (collectively "**inductive charging system**"). (Ex. 1005, ¶¶0034-0036.) The "**system**" includes a "**base unit**" (*e.g.*,

[4] References to prior art exhibits other than identified asserted prior art in the grounds demonstrate/support a POSITA's state-of-art knowledge at the time, as applicable.

cradle 4 (red)), consistent with the '371 patent. (*Id.*; FIG. 1; Ex. 1001, 3:55-:2, 58:26-515; Ex. 1002, ¶¶119-120.)

FIG. 1

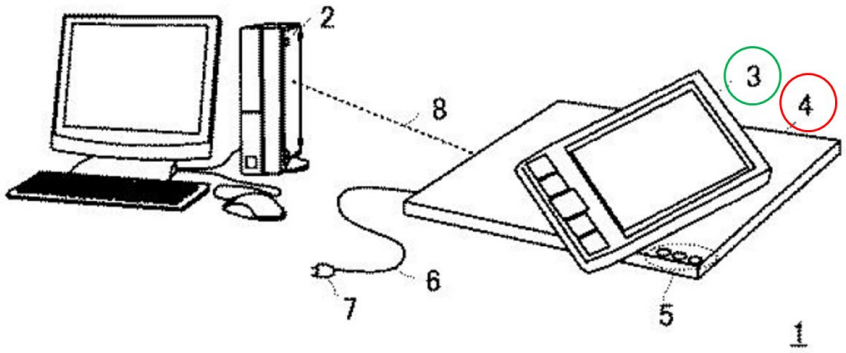

Okada describes exemplary components associated with PDA3 and cradle 4. (Ex. 1005, FIG. 2 (below), ¶0037.) Cradle 4 includes a **power transmitting module 10** ("PTM10"), and PDA3 includes a **power receiving module 40** ("PRM40") ("**receiver unit**") coupled to a battery (purple). (*Id.*, ¶¶0035-0058, FIG. 8, ¶¶0110-0111.) PRM40 with coil 41 in PDA3 exemplifies a "**receiver unit**" including, *inter alia*, a "**receiver coil**" (§IX.A.1(c)) and "**receiver circuit**" (§IX.A.1(e)). (Ex. 1002, ¶120.) PTM10 includes a primary coil 19 ("**primary coil**") (blue) (Ex. 1005, ¶0040) and various circuits (*e.g.*, one or more of IC 20 (and/or one or more of its components), circuits 13-18 etc.) ("**associated circuit**") (*id.*, ¶¶0037-0046). "[M]agnetic coupling" occurs between coils of cradle 4 and PDA3 coil, which "induces voltage" in coil 41 to "suppl[y] power" to PDA3/PRM40 ("**a receiver unit,**

coupled to the battery, configured to receive inductive power from an inductive charging system"). (*Id.*, ¶0035; Ex. 1002, ¶120; Ex. 1001, 10:2-12.)

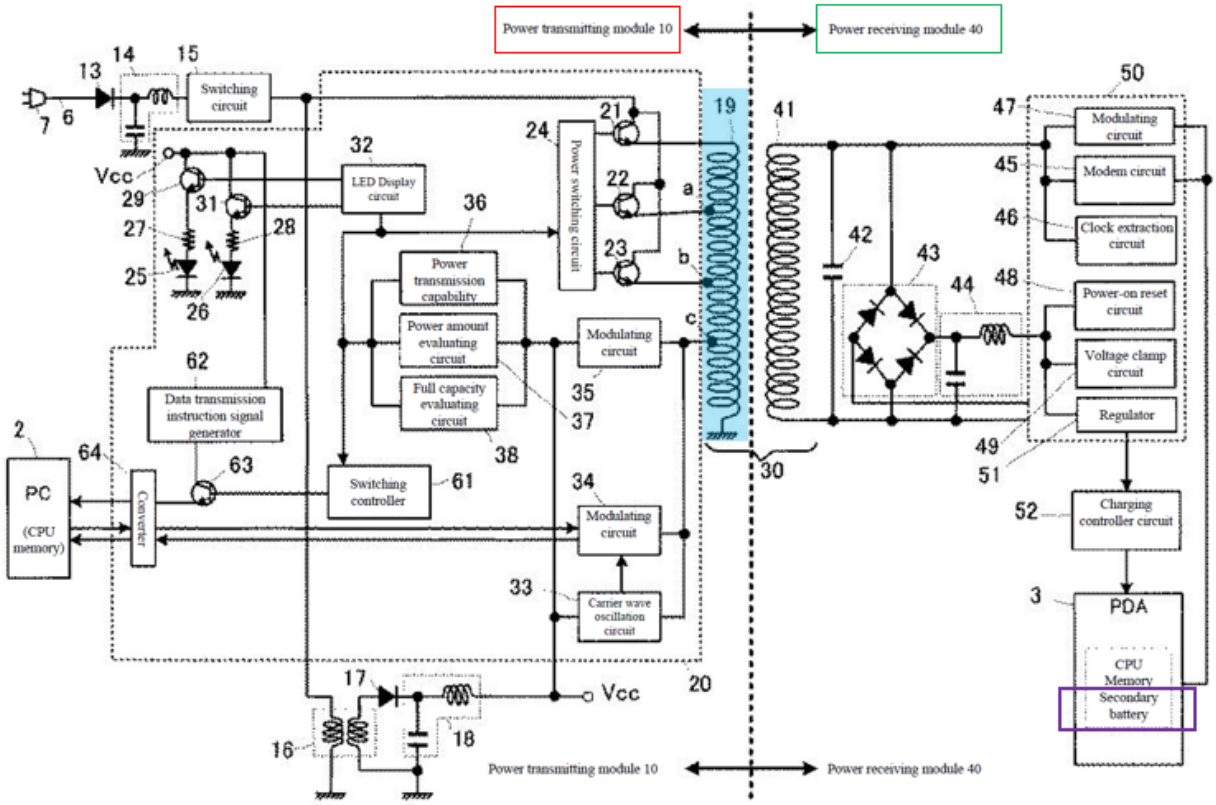

Switching circuit 15 in PTM10 receives a DC signal from circuits 13-14 (Ex. 1005, ¶¶0038, 0049) to generate a switching pulse signal that is converted (Vcc) and used to power components in PTM10 (via circuits 16-18) (*id.*, ¶0039) and is also supplied to coil 19 via switches 21/22/23 under control of power switching circuit 24 (*id.*, ¶¶0040, 0049-0051). Such features allow selected power level(s) to be transferred to PDA3 based on device "power consumption information" provided by PRM40. (*Id.*, ¶¶0040, 0051, 0057, 0063-0073; Ex. 1002, ¶¶121-122.)

Okada discloses configurations/applications of its power/charging system and portable device configuration having similar functionalities associated with PTM10 and PRM40. (Ex. 1005, FIGS. 2, 7 (below), 8-17, ¶¶0009-0032, 0094-0154.)

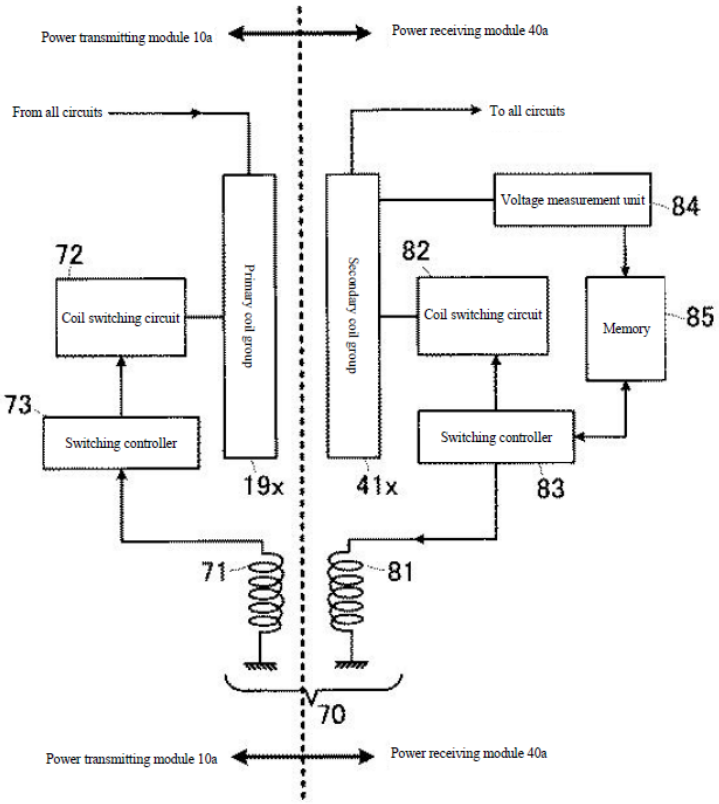

Applications of these features are described with respect to other examples. (Ex. 1005, ¶0107, FIG. 9 (below), ¶¶0116-0118 (multi-coil tabletop charging pad), FIG. 10, ¶0119 (charging multiple portable devices), FIGS. 11(a)-(b) (below), ¶¶0120-0122 (multiple PTM10s powering/charging multiple devices with PRM40s), FIGS. 12(a)-(b) (below) ¶¶0123-0126, FIGS. 13(a)-(b) (below), ¶¶127-132; Ex. 1002, ¶123.) Thus, multiple types of "**portable device(s)**" can operate with different types of "**charging systems**"/"**base unit(s).**" (*Id.*)

FIG. 9

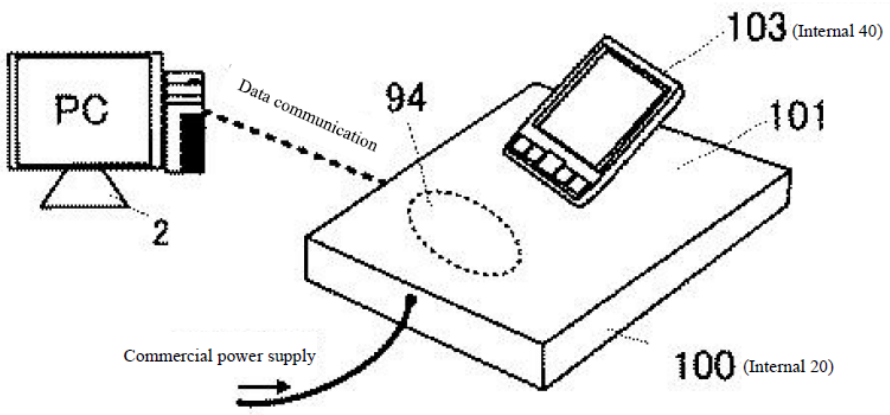
103 (Internal 40)
PC
Data communication
94
101
2
Commercial power supply
100 (Internal 20)

FIG. 10

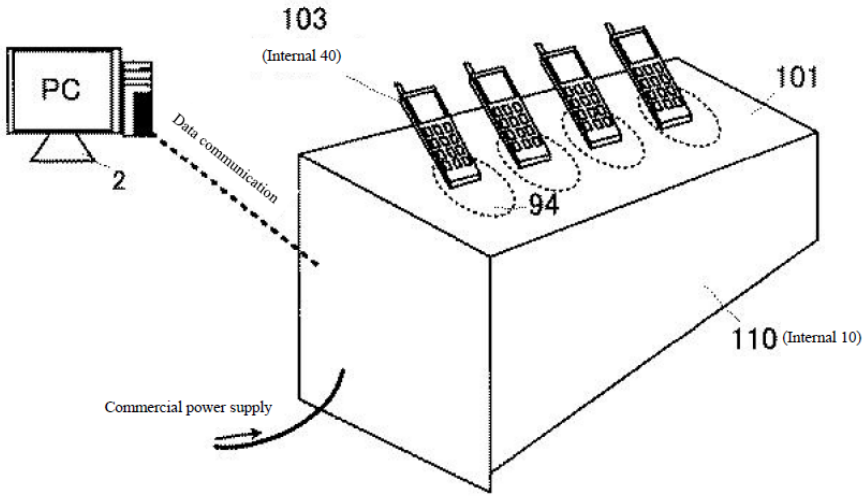
103
(Internal 40)
PC
101
Data communication
2
94
110 (Internal 10)
Commercial power supply

FIG. 11

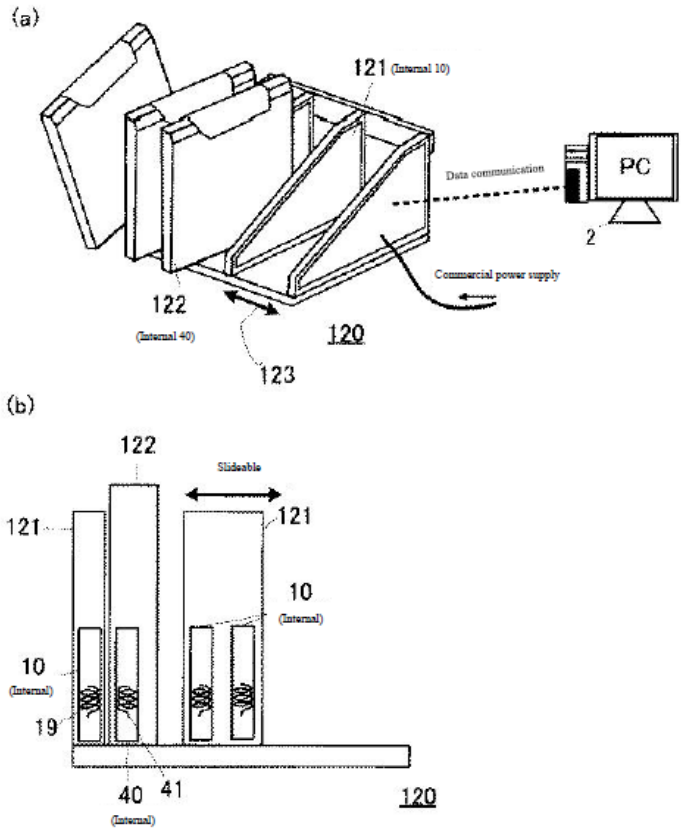
(a)
121 (Internal 10)
Data communication
PC
2
Commercial power supply
122
(Internal 40)
120
123
(b)
122
Slideable
121
121
10
(Internal)
10
(Internal)
19
40
41
(Internal)
120

FIG. 12

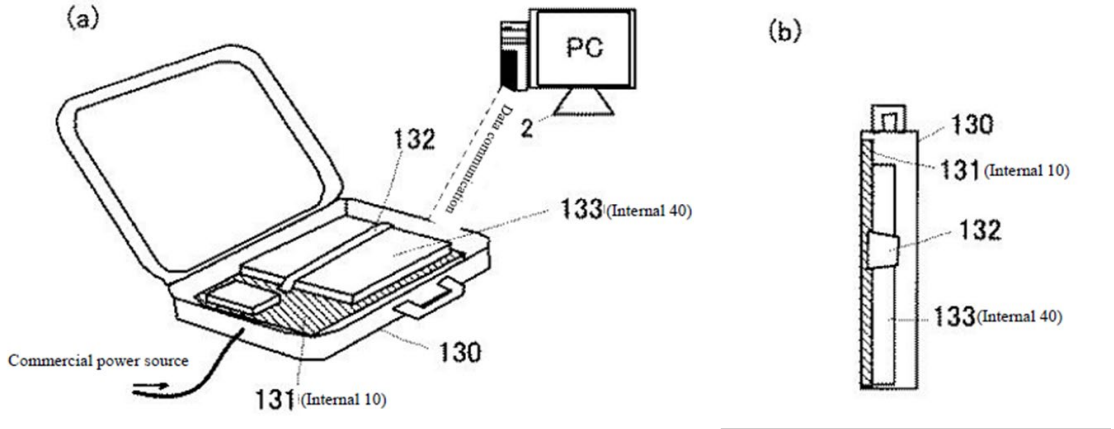
(a)
PC
2
Data communication
132
133 (Internal 40)
130
Commercial power source
131 (Internal 10)
(b)
130
131 (Internal 10)
132
133 (Internal 40)

FIG. 13

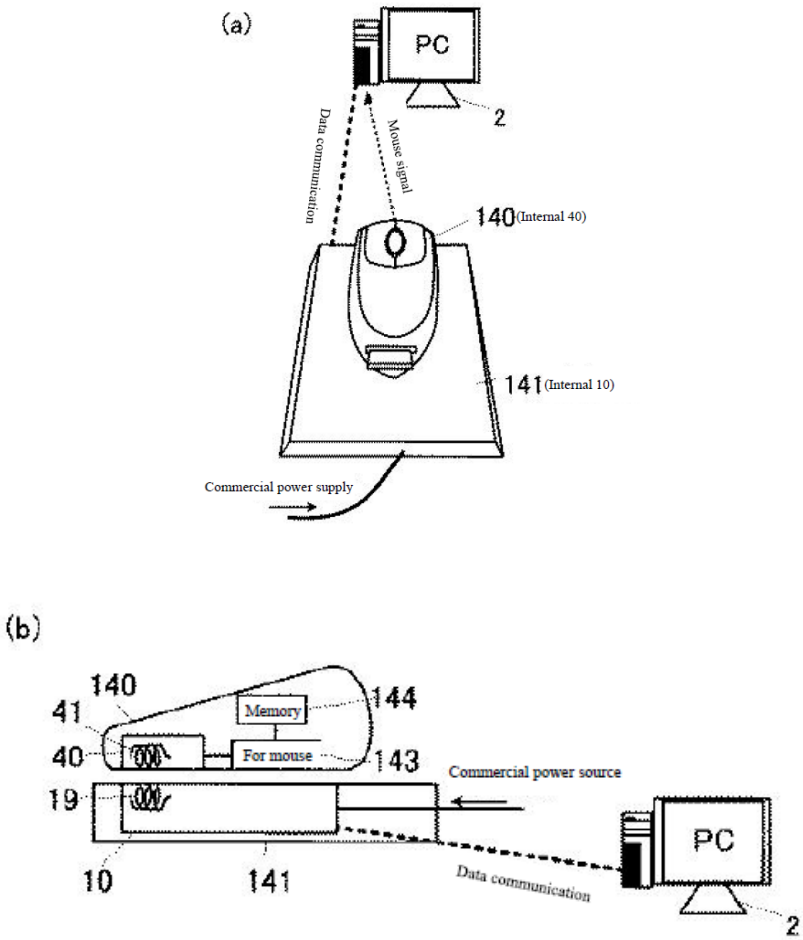

FIG. 3 (below) shows "power supply operations carried out between [PTM10 and PRM40]," applicable to such various configurations. (Ex. 1005, FIG. 3, ¶¶0059-0090; ¶¶0094-0115; Ex. 1002, ¶124.)

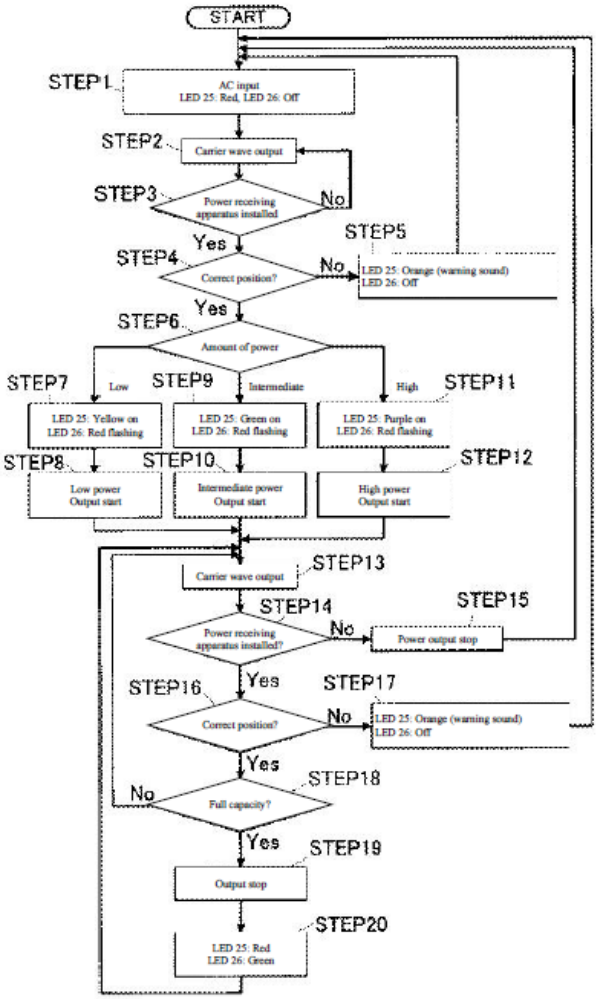
START
STEP1
AC input
LED 25: Red, LED 26: Off
STEP2
Carrier wave output
STEP3
Power receiving apparatus installed
No
Yes
STEP4
Correct position?
No
STEP5
LED 25: Orange (warning sound)
LED 26: Off
Yes
STEP6
Amount of power
STEP7
Low
STEP9
Intermediate
High
STEP11
LED 25: Yellow on
LED 26: Red flashing
LED 25: Green on
LED 26: Red flashing
LED 25: Purple on
LED 26: Red flashing
STEP8
STEP10
STEP12
Low power
Output start
Intermediate power
Output start
High power
Output start
STEP13
Carrier wave output
STEP14
STEP15
Power receiving apparatus installed?
No
Power output stop
Yes
STEP16
STEP17
Correct position?
No
LED 25: Orange (warning sound)
LED 26: Off
Yes
STEP18
No
Full capacity?
Yes
STEP19
Output stop
STEP20
LED 25: Red
LED 26: Green

c) a receiver coil which has a substantially planar shape and is located parallel to a surface of the portable device so that an alternating magnetic field, when received through the surface of the portable device from the primary coil in the base unit in a direction substantially perpendicular to the plane of the receiver coil, inductively generates a current in the receiver coil to provide power inductively to the portable device when the portable device is placed on the base unit for charging the battery of the portable device;

Okada in view of *Odendaal* discloses/suggests this limitation. (Ex. 1002, ¶¶125-137.) PRM40 ("**receiver unit**") includes coil 41 (orange) ("**receiver coil**"). (Ex. 1005, ¶¶0035, 0040; §§IX.A.1(a)-(b); Ex. 1002, ¶125.)

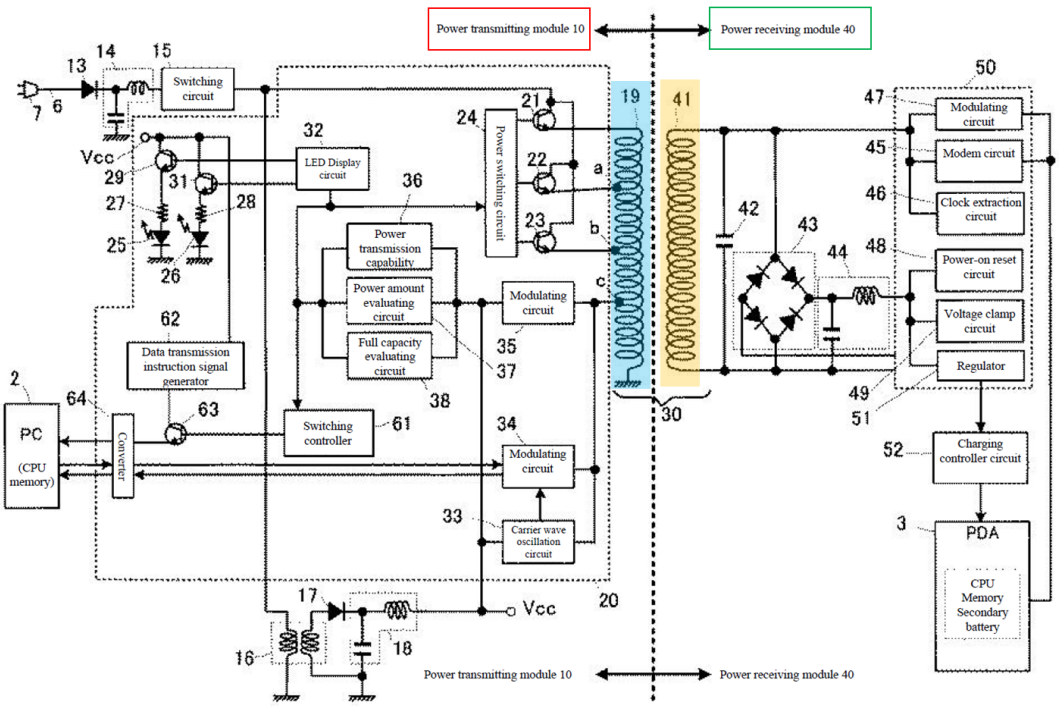

When PDA3 is properly positioned/aligned on/with cradle 4, "magnetic coupling induces a voltage" (and thus current) on coil 41 to power/charge PDA3.

(Ex. 1005, ¶¶0051; *id.*, ¶¶0035, 0047 0056, 0066-0068, FIG. 3.). Because coils 19/41 are magnetically coupled and power is inductively transmitted to PDA3, coil 41 receives "**an alternating magnetic field**" from coil 19, which "**inductively generates a current**" in coil 41 to "**provide power inductively to the portable device**", consistent with that known in the art. (Ex, 1002, ¶126; Ex. 1041, ¶¶0022, 0031; Ex. 1009, 2:62-3:8, 1:54-2:18, 3:20-4:11, FIGS. 1-3; Ex. 1010, FIGS. 1-5B, 8:55-9:52 ("as is *well known by those skilled in the relevant art*, primary coil 510 *induces a current to flow in secondary coil* 230"), FIGS. 6A-10, 7:21-8:54, 9:53-10:22, 11:27-14:67.)

Okada explains that power/charging occurs "**when the portable device** [PDA3] **is placed on the base unit** [cradle 4] **for charging the battery** [secondary battery] **of the portable device**." (Ex. 1002, ¶127.) Consistent with the disclosed feedback type processes (Ex. 1005, FIG. 3; §§IX.A.1(j)-(m)), cradle 4 detects the presence/proximity/alignment of a mobile device placed thereon before powering/charging the device/battery. (Ex. 1005, ¶¶0056-0058.) Circuits in PTM10 use information received from PRM40 to "evaluate whether supplying power to the device via the common cradle 4 is feasible" (*id.*, ¶0057-0073, FIG. 3 (*e.g.*, Steps 3-12)), and continuously checks for presence/alignment/position/charge status after onset of power/charge operations (*id.*, FIG. 3 (*e.g.,* Steps 13-20), ¶¶0074-77, 0090).

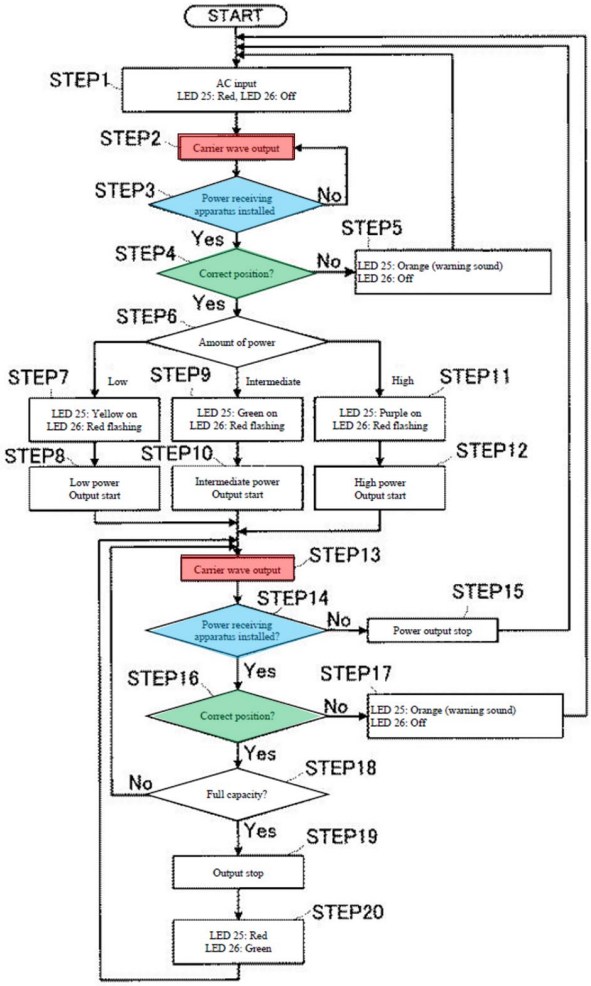

Okada's "**receiver coil**" is "**located parallel to a surface of the portable device**." (Ex. 1002, ¶128.) Figures 11(b) and 13(b) show examples of coil 41 positioned substantially parallel to a surface (**blue**) parallel (**red**) to coil 41 (**orange**) (below) of the portable device. (Ex. 1005, FIGS. 11(b) (left), 13(b) (right) (annotated below) §§IX.A.1(a)-(b); Ex. 1002, ¶128.) Similar arrangement/features exists with the other exemplary configurations discussed above and as modified below in view of *Odendaal*. (§IX.A.1(a)-(b); Ex. 1002, ¶128.)

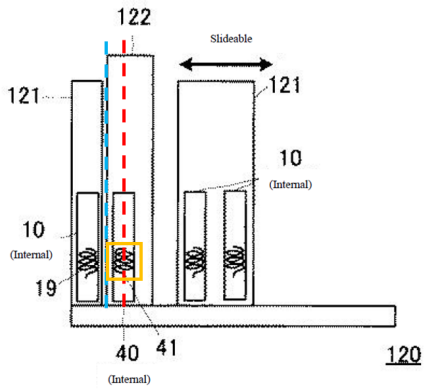

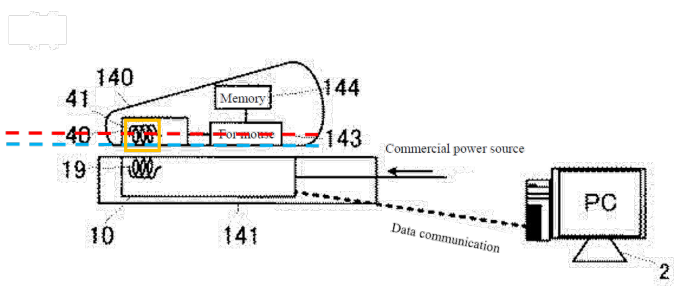

While *Okada* does not expressly state the "a receiver coil which has a *substantially planar shape* and is located parallel to a surface of the portable device," a POSITA would have found it obvious to configure *Okada*'s portable device to implement/use planar secondary coil(s) (and primary coil) in view of *Odendaal* in context of a POSITA's state-of-art knowledge. (Ex. 1002, ¶129.)

Planar coils placed in parallel to a power transfer system's surface were known. (Ex. 1002, ¶130; Ex. 1027, 1-3 (planar spiral inductor); Ex. 1015, FIGS. 1-2, 3-4, 7-12, Abstract, 1:5-2:29, 2:64-3:27, 3:39-51, 5:5-47, 5:48-9:5; Ex. 1047, FIGS. 1-3, 6, 8A-9, ¶¶0002, 0006-0007, 0018-0025-0034; Ex. 1025, FIGS. 1, 3, 8-9, 13, 1:10-2:3, 2:5-12 (reasons for thin coil designs), 2:14-3:2, 4:19-32, 7:25-9:28, 12:27-32, 14:4-17; Ex. 1026, FIGS. 1-2, 5, 9A-9C, Abstract, 1:3-4:4, 4:6-9:4, 11:4-15 (flat coils); Ex. 1009, Abstract, FIGS. 1-3, 1:4-51, 1:54-2:26, 2:47-3:8, 3:9-39 (thin flat coil), 4:18-60); 1024, FIGS. 3, 8-9, 1:12-15, 1:39-2:29, 9:41-53, 10:45-57, 11:60-13:4; Ex. 1028, Abstract, FIGS. 2-7, ¶¶0001, 0004-0007, 0025-0032, 0041;

Ex. 1029, 1-4, 9-19 (planar, spiral coils); Ex. 1030, FIGS. 3-7B, 1:5-9, 1:59-61, 3:19-56, 4:62-567, 5:25-44); Ex. 1036, Abstract, 2:22-3:6, 5:22, 11:18, 23:20-24:8, 24:19-22.)

Aware of such coil designs and associated tradeoffs (*e.g.*, size/weight/cost/performance), a POSITA would have been motivated to consider relevant teachings (*e.g., Odendaal*) when configuring/implementing an inductive power transfer/receiver device/system similar to *Okada*. (Ex. 1002, ¶131; Ex. 1047, ¶0033.)

Odendaal discloses inductive power/data transfer/reception technologies/techniques, and like *Okada*, is in the same technical field as the '371 patent. (§§IX.A.1(a)-(b); Ex. 1008, Title, Abstract, FIGS. 1A-4, 11-12, 1:5-3:57, 4:50-5:8, 5:24-28, 6:59-64; Ex. 1001, Abstract, 1:54-5:17.) Also like *Okada*, *Odendaal* discloses features that were reasonably pertinent to particular problem(s) the inventor for the '371 patent (and a POSITA) was trying to solve. (*E.g.*, Ex. 1001, 1:60-5:17, 28:11-20; Ex. 1008, Abstract, 1:5-3:57, 4:50-5:8, 5:24-28, 6:59-64; §§IX.A.1(a)-(b); Ex. 1005, FIGS. 1, 2, 7, 9-12 ¶¶0037-0048, 0049-0058, 0094-0109, 0116-0126; Ex. 1002, ¶132.) Such teachings thus would have been consulted when designing/implementing a contactless/inductive charging system, like *Okada*. (Ex. 1002, ¶¶85-88, 132.)

Odendaal discloses known use of **planar-type inductor coils** in an inductive power transfer system, for, *e.g.*, charging a cellphone battery. (Ex. 1008, FIGS. 1A-1B, 2A, 2C, 8E, 1:58-2:43.) *Odendaal* describes using a planar resonator, which includes spirals on opposite sides for energy transfer/reception "so that a battery of a cellphone could be charged without physical wires." (*Id.*, 1:60-67; *see also id.*, 1:53-57.) The planar resonator "transfer[s] power across the "interface-of-energy-transfer" (IOET) in either an electric or **magnetic form**, or both." (*Id.*, 2:1-10, 2:65-3:5, 4:44-5:8, 6:1-18; Ex. 1002, ¶¶133-134.) *Odendaal*'s planar coils may have "a thin and/or relatively flat top coil surface" and be arranged in upper and lower configurations "with an air gap." (Ex. 1008, 2:44-54; *see also id.*, 2:55-64.)

Odendaal's teachings regarding use of a "**planar**" coils for contactless power/data transfer/reception (*id.*, 1:60-67) is consistent with that known in the art. (Ex. 1002, ¶134; *supra* state-of-art disclosures; Ex. 1008, 1:60-67, 2:19-21, 2:29-44, 3:65-67.) Moreover, consistent with the thin form factor configurations of *Okada* (e.g., PDAs/mobile phones/laptops, charger pad, etc.), *Odendaal* discloses that the spiral coils "are preferably integrated into a **planar (flat/thin) structure**" (Ex. 1008, 3:3-5) and may conform to the housing surface to facilitate power transfer "in close proximity" (*id.*, 2:29-44). Such arrangements disclose coils that are parallel to the surface of the device and charger. (Ex. 1002, ¶134.)

In light of such teachings, and state-of-art knowledge, a POSITA would have been motivated, and found obvious, to modify the *Okada* system to use "**a receiver coil which has a substantially planar shape and is located parallel to a surface of the portable device**" (and complimented such a design with corresponding planar primary coil) to expand/compliment applications compatible with those contemplated by *Okada* to use thin(ner) devices. (Ex. 1002, ¶135; §§IX.A.1(a).) Such a modification would have provided options to reduce the volume the coil(s) occupy, device size/weight, and expanded/enhanced applications of *Okada* (*e.g.*, PDAs/mobile devices/etc.) (§§IX.A.1(a)-(b); Ex. 1005, FIGS. 1, 9, 10-16, ¶¶0033-0034, 0116-0146; Ex. 1061, 2:15-27 (volume/weight of portable device circuitry "should be reduced").) Planar coils provided options to reduce the distance between primary/secondary coils, promoting close proximity coupling (Ex. 1008, 2:29-44) for improving power transmission efficiency, reducing energy waste, and shortening charging time. (Ex. 1002, ¶135; Ex. 1005, ¶¶0066-0068, 0112, FIGS. 4(a)-4(b); Ex. 1036, 24:19-22 (the coil "should be placed close to the (preferably flat) 20 surface of the housing…to pick up maximum changing AC magnetic flux….").)

A POSITA would have had the skills and rationale in light of the teachings/suggestions of *Okada*, *Odendaal*, and a POSITA's state-of-art knowledge, to implement the above modification while considering design tradeoffs and techniques/technologies with a reasonable expectation of success. (Ex. 1002, ¶136.)

Especially given such modification would have involved known technologies/techniques (*e.g.*, a planar coil receiving/transmitting wireless power) to yield the predictable result of providing a portable device with enhanced mobile usage and form factors and a charging system/base unit with improved form factors, like that contemplated by *Okada-Odendaal*. (Ex. 1002, ¶136; §IX.A.1(a).) *See KSR Int'l Co. v. Teleflex, Inc.*, 550 U.S. 398, 416 (2007).

A POSITA would have understood implementing a planar receiver coil (along with similar positioned primary planar coil) as noted above in the *Okada-Odendaal* device/system would have resulted in the planar receiver coil receiving from the planar primary coil, "**an alternating magnetic field**," "**through the surface of the portable device**," that was "**substantially perpendicular to the plane of the receiver coil**," when the device is properly positioned/aligned on the base unit, consistent with that known in the art. (Ex. 1002, ¶137; Ex. 1005, Abstract (coils 19 and 41 are "***internal***" coils ("**through the surface**")), FIGS. 1, 9-16; Ex. 1008, 2:51-52; Ex. 1011, 558, 559 ("magnetic field at the center of [a wire] loop is perpendicular to the plane of the loop"), 562-564, 592; Ex. 1048, Abstract, FIGS. 1-6, 1:28-2:4, 2:27-3:14, 4:11-24, 5:23-6:15, claims 1-88; Ex. 1049, Abstract, FIGS. 1, 5-6, 9, 11-12, 24-26, ¶¶0008-0010, 0044-0051, 0065-0066; Ex. 1050, Abstract, FIGS. 1-5, 9A-9C, 5:22-6:45, 11:22-33, 12:28-38, 16:25-17:23, 17:61-18:3 ("***substantially perpendicular***" magnetic field from planar coils).) A POSITA would have

appreciated that implementing planar coils (primary-secondary) would have promoted efficient energy transmission between the charger and portable device, especially where the coils were aligned to allow the perpendicular magnetic field generated by the primary coil(s) to be efficiently received by the receiving coil(s). (Ex. 1002, ¶137.)

d) a ferromagnetic layer placed under the receiver coil on a side of the receiver coil away from the surface of the portable device; and

Okada-Odendaal in view of *Cho* discloses/suggests this limitation. (Ex. 1002, ¶¶138-144; §§IX.A.1(a)-1(c).) While *Okada-Odendaal* does not expressly disclose a ferromagnetic layer as claimed, a POSITA would have found it obvious to implement such features in view of *Cho*. (Ex. 1002, ¶138.)

Cho, like *Okada-Odendaal*, is in the same technical field as the '371 patent and discloses features reasonable pertinent to particular problem(s) the '371 patent inventor and a POSITA was trying to solve. (§§IX.A.1(a)-(b); Ex. 1061, Abstract, 1:5-18, 1:35-2:14, 17:10-23:13; Ex. 1001, Abstract, 1:50-5:17, 16:32-49.) *Cho* discloses features reasonable pertinent to particular problem(s) the '371 patent inventor and a POSITA was trying to solve. (Ex. 1061, 17:10-23:13; Ex. 1001, 48:13-30; Ex. 1002, ¶139.) Therefore, a POSITA had reasons to consider/consult *Cho* when designing/implementing the *Okada-Odendaal* combination discussed above. (Ex. 1002, ¶139.)

Cho discloses designs/materials associated with planar receiver coils used for charging/powering portable devices. (Ex. 1061, 17:10-18, 17:18-19:19.) Such configurations include using ferrite sheets for implementing planar receiver coils in portable devices. (Ex. 1002, ¶¶89-92, 140; Ex. 1061, FIG. 8A (below).)

FIG. 8A

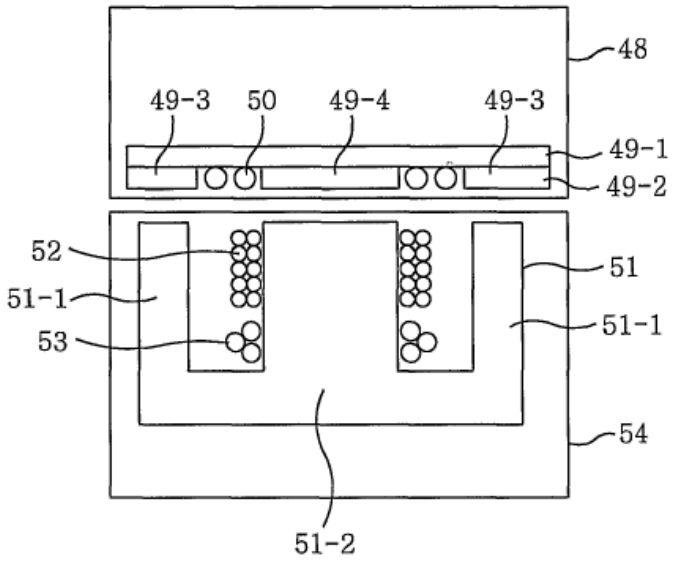

Portable device 48 includes a "thin film shape winding 50" located in a groove formed by two layers of ferrite sheets 49-1, 49-2. (Ex. 1061, 17:10-18:15.) Charger 54 includes windings 52/53 located around ferrite core 51-2 for transferring energy to device 48. (*Id.*, 17:26-35; *see also* 22:4-23:13, FIG. 11 (below).) Below, *Cho* also discloses use of a ferrite sheet 49-11 (**yellow**) placed behind/under a planar secondary coil 50-3 (red) ("**a ferromagnetic layer placed under [a] receiver coil**")

and "**on a side of the receiver coil away from [a] surface of the portable device**" 48 (blue). (*Id.*, FIGS. 8A and 11; Ex. 1002, ¶141.)

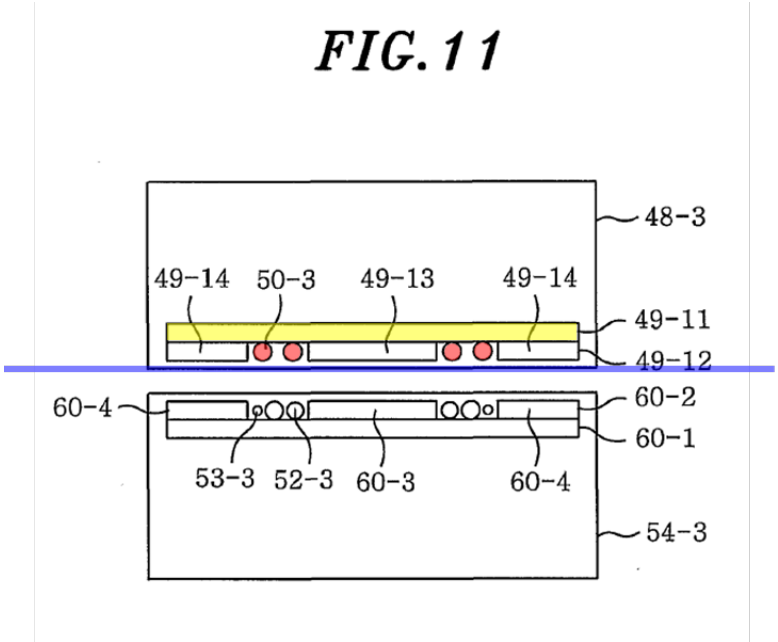

In light of such teachings/suggestions, a POSITA would have been motivated and found it obvious to configure the *Okada-Odendaal* modified portable device such that the "**receiver unit**" (§IX.A.1(b)) includes a ferrite sheet/layer placed under the planar receiver coil on a side of the coil away from the surface of the portable device in order to, *e.g.*, shield circuitry from electromagnetic waves generated during inductive charging operations. (Ex. 1002, ¶142.) *Cho*'s guidance associated with planar receiver coils with ferrite material/layers/sheets would have motivated a POSITA to consider/implement similar features in the *Okada-Odendaal* system, and done so with a reasonable expectation of success. (*Id.*) "[B]y tailoring a thickness of a desired ferrite and a thickness and a width of a wire, a charging device **having**

a high charging efficiency can be obtained without increasing a volume and a weight of a portable device," consistent with the *Okada-Odendaal* combination. (*Id.*, 18:16-24; Ex. 1002, ¶142.)

A POSITA would have also understood that the ferrite sheet placed under the planar receiver coil on a side of the coil away from the surface of the portable device would have shielded portable device circuits from the electromagnetic fields, *e.g.*, those generated by the primary coil. (Ex. 1002, ¶143.) Such a feature would have reduced/minimized the electromagnetic field's detrimental effects on the portable device's circuits, *e.g.*, unwanted radiations and heat on the circuits that may cause faulty signals and reduced reliability and service life. (*Id.*)

A POSITA would have had the skill and rationale to implement, and reasonable expectation of success in achieving, such modification. (*Id.*, ¶144.) Indeed, it was known to employ ferrite sheet(s) in portable device receiver coil designs (*Cho*) and that such material as implemented in the modified *Okada-Odendaal* system would have mitigated potential detrimental effects of electromagnetic fields on the portable device. Thus, such modification would have involved applying known technologies/techniques (*e.g.,* ferrite sheet(s) layers, etc.) to yield the predictable result of shielding a portable device's circuits from electromagnetic fields, consistent with that discussed above by *Cho* and known in the art. (Ex. 1002, ¶144.) *KSR* at 416-18.

e) a receiver circuit powered by the inductive charging system, wherein the receiver circuit comprises:

f) a receiver rectifier circuit including a rectifier and a capacitor;

Okada-Odendaal-Cho discloses/suggests limitations 20(e)-(f). (Ex. 1002, ¶¶145-146; §§IX.A.1(a)-(e).) PDA3's PRM40 ("**receiver unit**") includes a "**receiver circuit**" (*e.g.*, **red** below) that includes capacitor 42 (**pink**) and circuit 44 (with capacitor/inductor) (**orange**) (either an example of a "**capacitor**"), rectifying circuit 43 (**blue**) ("**rectifier**") and/or one or more other components in PRM40 (other than the **battery**), *e.g.*, one or more of circuits 45, 48-49, and 51-52. (Ex. 1005, ¶0047, FIG. 2; §§IX.A.1(a)-(b).)[5] Circuits 42/43, 43/44, or 42/43/44 are each an example of a "**receiver rectifier circuit**" as they smooth/rectify the signal from coil 41. (Ex. 1002, ¶145; Ex. 1005, ¶¶0047, 0057.)

[5] The annotated figure(s) provided herein are exemplary visual aids and are not intended to limit/constrain the prior art mappings (alone or as modified). For example other components/circuitry, etc. not shown but described/suggested by *Okada* (or as modified *Okada*) may be encompassed in such mappings that meet the claimed limitation features as discussed herein.

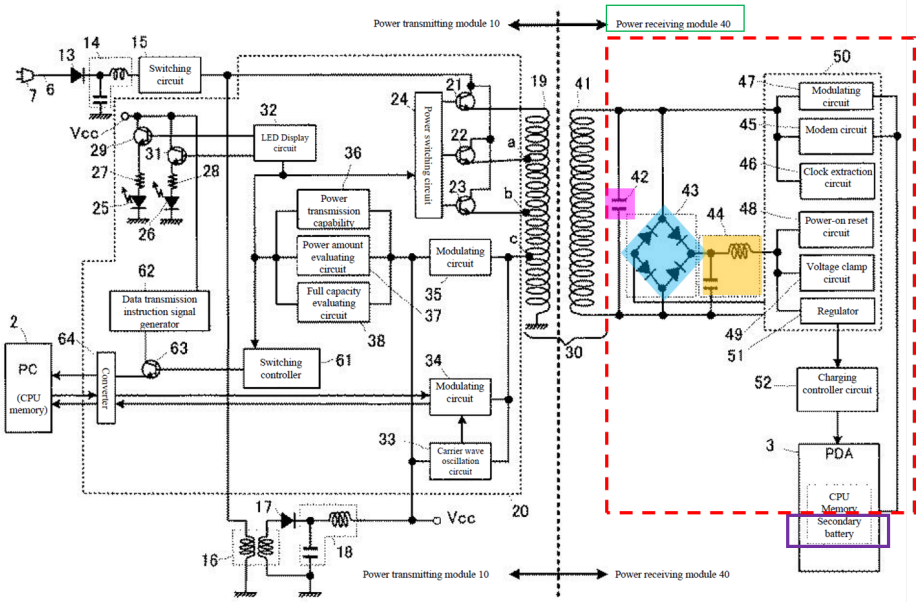

Okada's "**receiver circuit**" converts the signals received, via coils 19 and 41, from the "**inductive charging system**" (*supra* limitations 20(a)-(c)) into a DC signal to power the components in the "**receiver circuit**," PDA3, and charge its battery. (Ex. 1005, ¶¶0047, 0056-0058, 0062-0063; Ex. 1002, ¶146; §§IX.A.1(a)-(c); Ex. 1041, ¶¶0022, 0031; Ex. 1009, 8:55-9:52.)

g) a receiver communication and control circuit including a microcontroller to modulate the current in the receiver coil to communicate with the base unit while the receiver circuit is being powered by the inductive charging system;

Okada-Odendaal-Cho discloses/suggests this limitation. (Ex. 1002, ¶¶147-158.)

Clock extracting circuit 46 of PRM40 extracts a clock signal from a carrier wave received from oscillating circuit 33 of PTM10. (Ex. 1005, ¶¶0056-0057,

0063.) Modulating circuit 47 "uses the clock signal…to modulate the carrier wave," based on PDA3's information (including power receiving capability code, power consumption information, and full capacity information), and provides the modulated carrier wave to PTM10 through primary coil 19. (*Id.*, ¶¶0057, 0064.) After demodulation by circuit 35, and based on the information therein, evaluation circuits 36-38 of PTM10 "perform various decision-making processes" associated with powering/charging PDA3. (Ex. 1005, FIG. 2, ¶¶0042, 0057, 0060-0077, FIG. 3.) These processes determines whether supplying power from cradle 4 to PDA3 is feasible (circuit 36), amount of power to supply to PDA3 (circuit 37), and whether the charging of PDA3 is complete (circuit 38). (*Id.*, FIG. 3, ¶¶0057-0076; Ex. 1002, ¶148.)

Thus, in one example, at least one of circuits 46 and 47 (annotated in Figure 2 below) discloses an example of "**a receiver communication and control circuit**." (Ex. 1002, ¶149; Ex. 1005, FIG. 2.) Other components may be included in the "**circuit**," *e.g.*, modem circuit 45, power-on reset circuit 48, voltage clamp circuit 49, and/or switching controller 83 in the multi-coil arrangement of FIG. 7. (Ex. 1005, FIG. 7 (annotated below), ¶¶0047-0048, 0094-0115; §IX.A.1(b).)

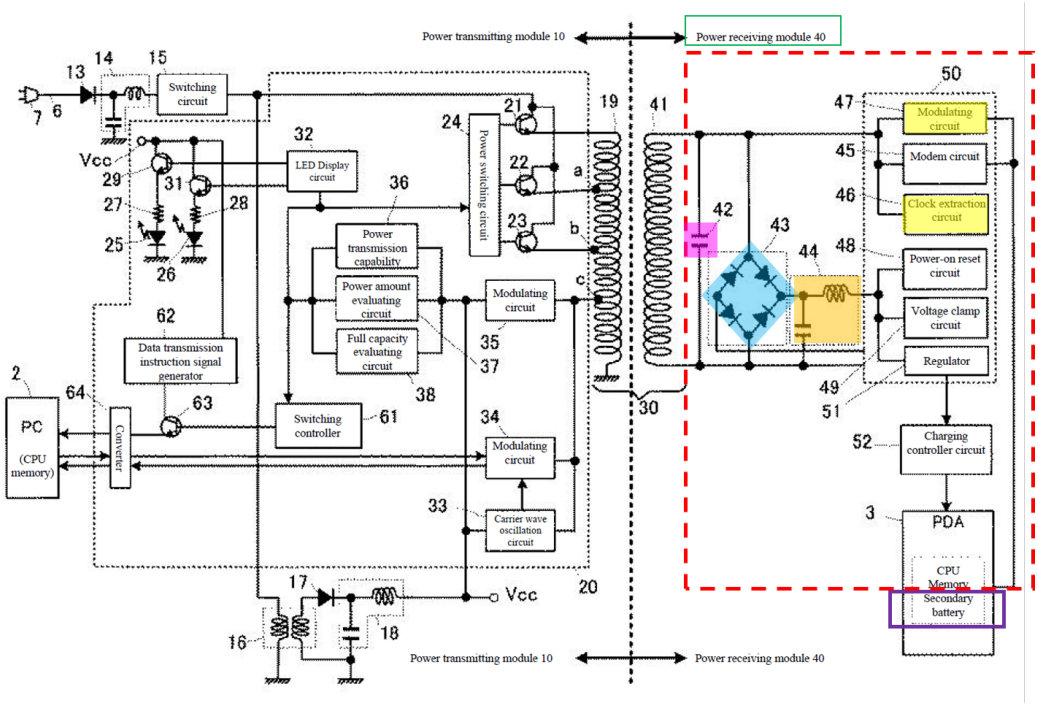
Power transmitting module 10
Power receiving module 40
Switching circuit
LED Display circuit
Power switching circuit
Power transmission capability
Power amount evaluating circuit
Full capacity evaluating circuit
Modulating circuit
Data transmission instruction signal generator
Switching controller
Carrier wave oscillation circuit
PC
(CPU memory)
Converter
Vcc
Modulating circuit
Modem circuit
Clock extraction circuit
Power-on reset circuit
Voltage clamp circuit
Regulator
Charging controller circuit
PDA
CPU
Memory
Secondary battery

FIG. 7

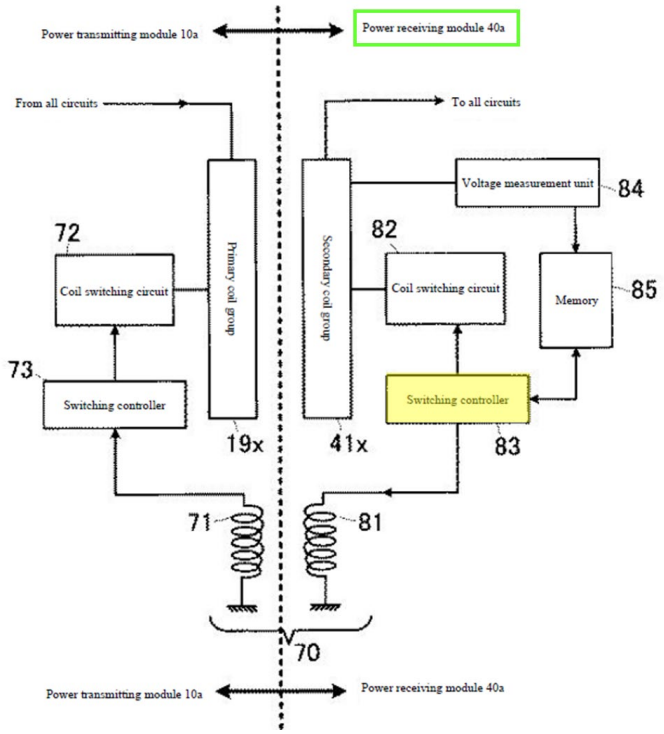
Power transmitting module 10a
Power receiving module 40a
From all circuits
To all circuits
Voltage measurement unit
Coil switching circuit
Primary coil group
Secondary coil group
Coil switching circuit
Memory
Switching controller
Switching controller

Circuits 46-47 (and circuits 45/48/49) may be "configured on the same IC chip," *e.g.*, "power receiving control IC 50." (Ex. 1005, ¶¶0047-0048, 0057, 0063, 0086-0092, FIGS. 2, 7.) Such circuitry would have been understood as compact integrated circuitry designed to perform certain operations in PRM40, which is consistent with a "**microcontroller**" as understood by a POSITA and in context of the '371 patent. (Ex. 1002, ¶150; Ex. 1001, 24:32-45, 39:33-38 (exemplifying an "IC" or "chip" as a "microcontroller"); Ex. 1064, ¶0023 (describing a secondary-side module "[as] an *integrated circuit*, such as a *microprocessor*").) The same is true where switching controller 83 is part of such "**receiver communication and control circuit**" since it sends "instructions" to control the switching to select specific coils. (Ex. 1005, ¶¶0096-0097, 0100-0106; Ex. 1002, ¶150.) Thus, *Okada-Odendaal-Cho* discloses "**a receiver communication and control circuit including a microcontroller**." (Ex. 1002, ¶150.)

To the extent it is argued/determined the claimed "microcontroller" requires a processor or the like and *Okada* does not expressly disclose such features, it would have been obvious to configure the "receiver circuit" in PRM40 to include such features because it would have been a foreseeable application of known technologies/techniques in a portable device/system, which uses ICs to perform "control[ler]"-type operations, consistent with *Okada*. (*Supra*; Ex. 1002, ¶151; Ex. 1006, 5:65-6:59, FIGS. 4-5 (controller 40); Ex. 1024, 6:60-7:14 ("microprocessor

controller 308" controlling power-supply operation/modes), FIG. 3; Ex. 1064, ¶0023.) Such a modification would have been an obvious variation/implementation as to how the communication/control circuit (above) performs/provides similar features, while providing known programmable functionalities. A POSITA would have had the skills and rationale to implement such a modification, and given the known technology and *Okada*'s teachings, would have done so with a reasonable expectation of success. (Ex. 1002, ¶151.)

As discussed, modulating circuit 47 (part of "**receiver communication and control circuit**") modulates the carrier wave based on PDA3's information that is sent to PTM10 when the "**receiver circuit**" is powered by the "**charging system**." (§§IX.A.1(e)-(f); Ex. 1005, ¶¶0042, 0047, 0056-0058, 0062-0063; Ex. 1002, ¶152.)

Okada explains that the modulation method may be based on "periodic intensity modulation of a carrier wave and may use a phase modulation method." (Ex. 1005, ¶0058.) However, to the extent that *Okada-Odendaal-Kook* does not disclose "**a receiver communication and control circuit including *a microcontroller to modulate the current in the receiver coil to communicate with the base unit* while the receiver circuit is being powered by the inductive charging system**," a POSITA would have found it obvious to implement such features. (Ex. 1002, ¶153.)

A POSITA would have understood that modulating/demodulating a waveform (*Okada*) by using an inherent property thereof (*e.g.*, current) would have been one of "a finite number of identified, predictable solutions" for including/encoding/decoding information to facilitate communications between the portable device and base unit in the modified *Okada* system/device (*e.g.*, used to confirm power reception equipment, verify/determine presence/alignment, etc., consistent with that disclosed by *Okada*). (Ex. 1002, ¶¶154-155; Ex. 1005, ¶¶0056-0057, 0062-0064.) *KSR* at 421. Thus, a POSITA would have been motivated to configure the modified *Okada* system to provide current modulation/demodulation-type techniques/technologies to facilitate communications of information via the primary/receiver coils, such that the "microcontroller" in the above-described communication/control circuit would "**modulate the current in the receiver coil** [41] **to communicate with the base unit** [cradle 4]," consistent with that known in the art, while the disclosed "receiver circuit" is being powered by the "charging system," consistent with *Okada*'s operations. (Ex. 1002, ¶¶156-157; Ex. 1056, Abstract, 2:7-9, 2:38-44, 4:21-34, 5:12-14, 6:12-33; Ex. 1057, 9:20-24, 15:16-21, 21:21-22:3, FIGS. 1-3, 11-13; Ex. 1058, Abstract, FIGS. 1, 3A-8, 3:25-4:35, 5:27-7:23, 10:22-24, 10:25-12:17.) (*See also* Ex. 1001, 24:32-45) (discussing "current modulation" in context of conventional technologies—supporting that such features were known); Ex. 1063; Ex. 1002, ¶¶156-157.)

A POSITA would have had the requisite skills and rationale to implement such features in the *Okada-Odendaal-Cho* system, and done so with a reasonable expectation of success, given the teachings of *Okada* and POSITA's state-of-art knowledge at the time. (Ex. 1002, ¶158.) Especially since such modification would have involved applying known technologies/techniques (known current modulation/demodulation techniques) to predictably yield an inductive power transfer system that facilitates communications consistent with that taught by *Okada*. (Ex. 1002, ¶158; §§IX.A.1(f)-(n).) *KSR*, 550 at 416.

h) a voltage regulator coupled to an output of the receiver rectifier circuit and coupled to the microcontroller to provide a regulated voltage to power the microcontroller from the received inductive power; and

Okada-Odendaal-Cho in view of *Tetlow* discloses/suggests this limitation. (Ex. 1002, ¶¶159-165.)

In *Okada*, regulator 51 (**brown** below) ("**voltage regulator**") is coupled to the **output** of the circuit 44 (part of "**receiver rectifier circuit**" (§IX.A.1(f))) and provides a voltage output to charging control circuit 52 to charge PDA3. (Ex. 1005, ¶¶0047-0048; FIG. 2; Ex. 1002, ¶160.)

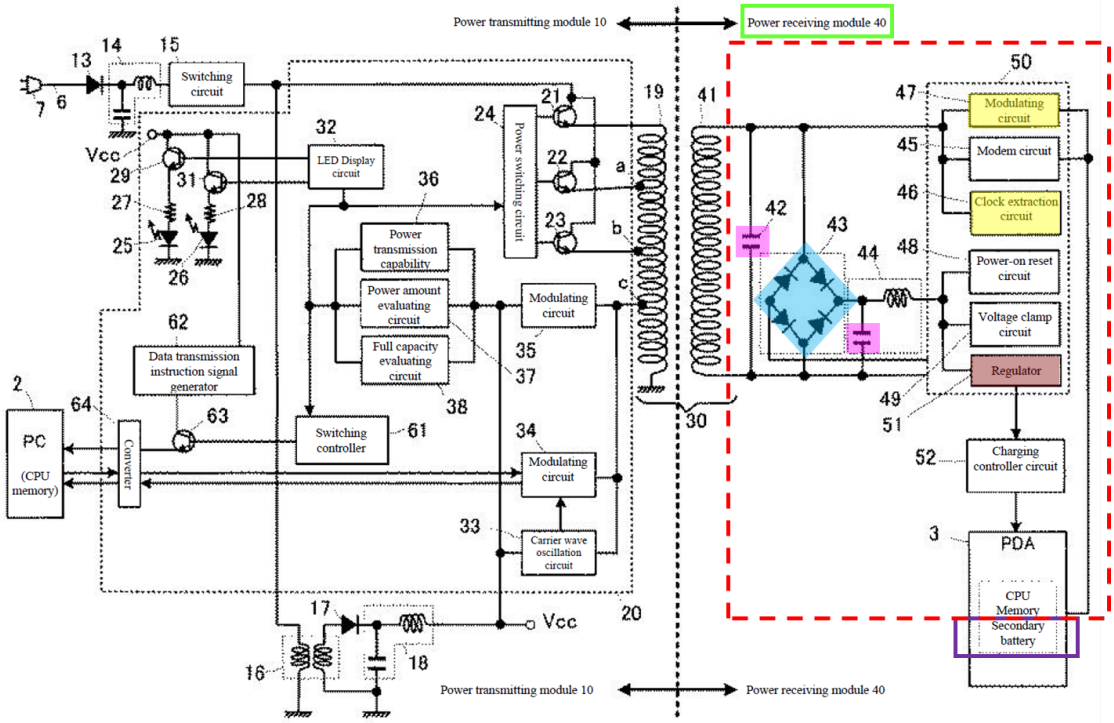

While regulator 51 provides power through circuit 52 to charge PDA3 (containing a battery) (Ex. 1005, ¶0087), *Okada* does not expressly disclose that regulator 51 is "**coupled to the microcontroller to provide a regulated voltage to power the microcontroller from the received inductive power**." A POSITA, nevertheless, would have been motivated to implement such features in view of *Tetlow*. (Ex. 1002, ¶161.)

Tetlow, like *Okada* (and other combined art), is in the same technical field as the '371 patent and discloses features reasonable pertinent to particular problem(s) the '371 patent inventor and a POSITA was trying to solve. (§§IX.A.1(a)-IX.A.1(g); Ex. 1064, Abstract, ¶¶0021-0023; Ex. 1001, Abstract, 1:60-5:17, 33:56-66, 35:17-30; Ex. 1002, ¶162.) Therefore, a POSITA had reasons to consider/consult *Tetlow*

when looking to design/implement the above modified *Okada* combination. (Ex. 1002, ¶162.)

Tetlow discloses a rectifier/control module 33 receives signals inductively generated on a secondary coil 31 and provides rectified signals to regulators 35 (blue below). (Ex. 1064, ¶¶0002, 0021-0022.) Based on the rectified signal, regulators 35 power "an intelligence module 37 [red below],…typically provided [as] an integrated circuit, such as a microprocessor." (Ex. 1064, ¶0023; *id.*, ¶0021-0022.) Regulators 35 provide two power levels, *e.g.*, 22V to a load 36, and 5V to the microprocessor. (*Id.*, ¶0023.) Thus, *Tetlow* discloses "**a voltage regulator coupled to an output of [a] receiver rectifier circuit** [*e.g.*, module 33] **and coupled to [a] microcontroller** [*e.g.*, module 37] **to provide a regulated voltage to power the microcontroller from the received inductive power**." (Ex. 1002, ¶¶93-94, 163.)

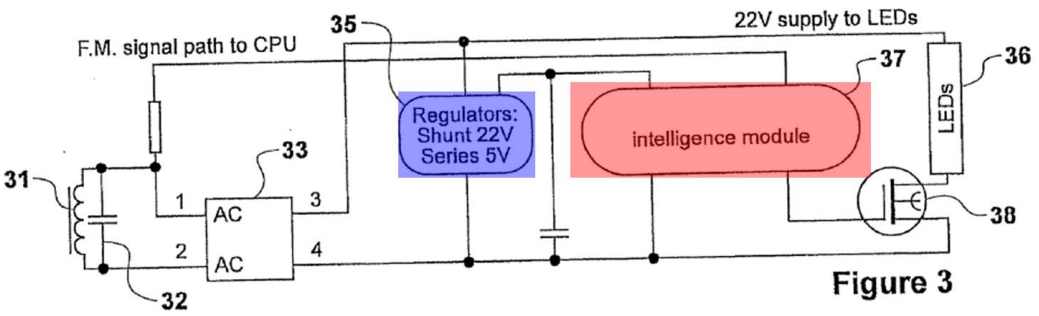

In light of such teachings/suggestions, a POSITA would have been motivated and found it obvious to implement a "**voltage regulator**" in the "**receiver circuit**" in the above-modified *Okada* device (§IX.A.1(e)) that receives the rectified signals

from the "**receiver rectifier circuit**" (§IX.A.1(f)) to "**provide a regulated voltage to power the microcontroller**" (§IX.A.1(g)) "**from the received inductive power output**" that was received by the receiver coil 41 (that is rectified/smoothed via circuits 43/44). (Ex. 1002, ¶164.) Consistent with that known in the art, such configuration would have ensured that the "microcontroller" receives a constant/stabile voltage suitable for powering/operating the microcontroller and related circuitry to prevent potential voltage irregularities at the receiver rectifier circuit output, which may damage components during operations. (Ex. 1002, ¶164; Ex. 1065, ¶¶0033-0039 (voltage converter/regulator used to avoid "voltage spikes" and increase "operating reliability"), claims 1-7, FIG. 1).) A POSITA would have been motivated to consider/configure such a modification in various ways, including modifying regulator 51 to provide such regulation operations for power the "microcontroller" and supply regulated voltage to charge controller 52, or implementing a complimenting voltage regulator circuit dedicated for regulating voltage for the "microcontroller." (Ex. 1002, ¶164.)

A POSITA would have had the skill and rationale to implement, and reasonable expectation of success in achieving, such modification. (Ex. 1002, ¶165.) Especially since to the benefits of using a voltage regulator to provide stabilized voltage/power to controller circuitry to mitigate issues, *e.g.*, voltage spikes/irregularities, damage to components. (*Supra*.) Thus, such modification

would have involved applying known technologies/techniques to yield the predictable result of a portable device with conventional voltage regulator mechanisms to provide stabile voltage for powering electrical components in an inductive power transfer system, consistent with that discussed by *Okada*, *Tetlow*, and known in the art. (Ex. 1002, ¶165.) *KSR* at 416-18.

i) a battery charging circuit to charge the battery, wherein the battery charging circuit is coupled to the output of the receiver rectifier circuit and coupled to the battery and begins drawing current only when the output of the receiver rectifier circuit reaches a set minimum voltage value;

Okada-Odendaal-Cho-Tetlow in view of *Nguyen* discloses/suggests this limitation. (Ex. 1002, ¶¶166-172.)

As explained and shown below, the "**receiver circuit**" (§IX.A.1(e) (red)) includes charging control circuit 52 ("**battery charging circuit**") (green), which is coupled to the output of the "**receiver rectifier circuit**" (§IX.A.1(f) (variations of circuits 42/43/44 (magenta/blue/orange))) via regulator 51 and also to the battery (purple). (Ex. 1005, ¶0047, FIG. 2 (below); §§IX.A.1(a)-(b), (f)-(h); Ex. 1002, ¶167.)

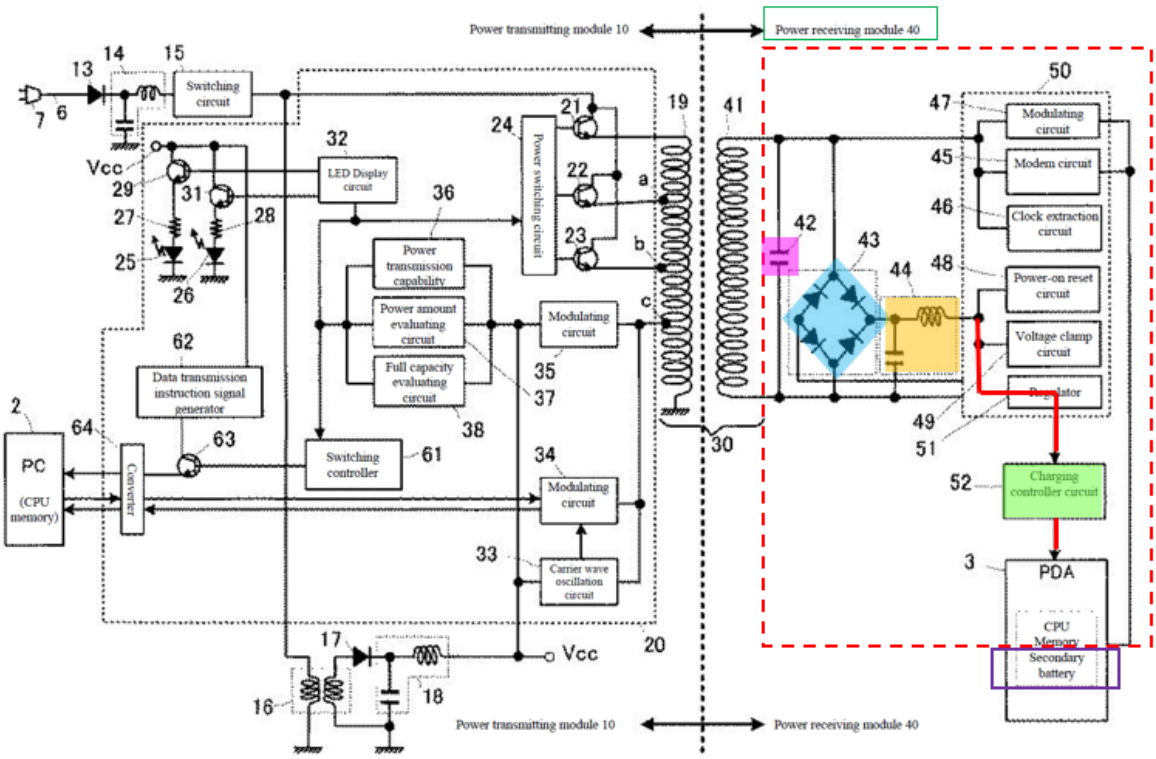

To the extent that *Okada* does not disclose that circuit 52 "**begins drawing current only when the output of the receiver rectifier circuit reaches a set minimum voltage value**," a POSITA would found it obvious to implement such features in view of *Nguyen*. (Ex. 1002, ¶168.)

Nguyen discloses technologies/techniques for providing/supplying power from one system to another (subsystem), which a POSITA would have found relevant/helpful to inductive power transfer system/component designs/implementations, like those disclosed by *Okada* and other asserted prior art (§§IX.A.1(a)-(h); Ex. 1002, ¶169; Ex. 1066, Abstract, ¶¶0002-0004). Thus, *Nguyen* is in the same technical field as the '371 patent and discloses features reasonable

pertinent to particular problem(s) the '371 patent inventor and a POSITA was trying to solve. (*Id.*; Ex. 1001, Abstract, 1:54-55, 9:58-10:33; Ex. 1002, ¶169.) Therefore, a POSITA had reasons to consider/consult *Nguyen* when looking to design/implement the above–discussed *Okada* combination. (Ex. 1002, ¶169.)

In *Nguyen*, a pass device N10 (red below) controls power supplied from supply 22 to subsystem 26, where N10 is controlled by control electronics 24 (blue) and coupled to a voltage regulator or diode D1 to manage the "startup characteristics" of the power transfer. (Ex. 1066, ¶¶0029-0030.) "[C]ontrol electronics 24…determines the **under-voltage lockout voltage level**," which "may be programmed" to "set" a "minimum" output voltage from supply 22—which is required to turn on device N10—to "start supplying power to subsystem 26." (*Id.*, ¶0030.) As a POSITA would have understood, given that when N10 (*e.g.*, a MOSFET) is turned off (*id.*, ¶0029) little-to-no current flows through N10, subsystem 26 draws little-to-no current from supply 22. (Ex. 1002, ¶¶95-96, 170.) Thus, only when the set minimum output voltage (from supply 22) is reached (which turns on N10), subsystem 26 begins to draw current ("**begins drawing current only when the output of [a] receiver rectifier circuit reaches a set minimum voltage value**"). (*Id.*, ¶170.)

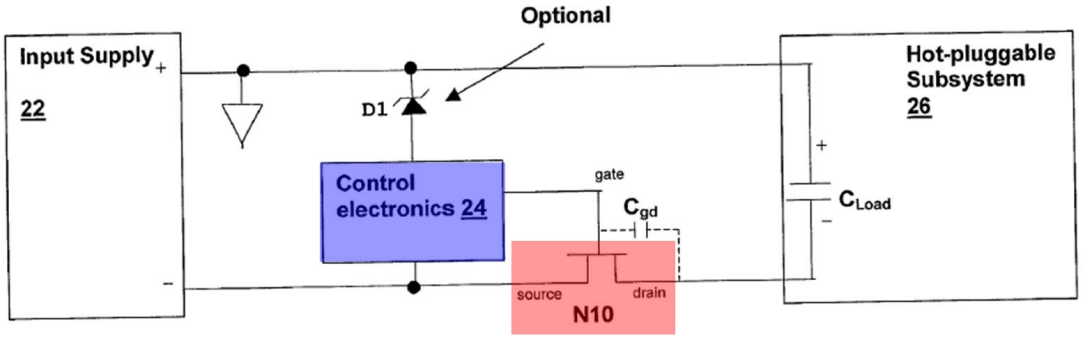

In light of such teachings/suggestions, a POSITA would have been motivated and found obvious to configure/modify the charge control circuit 52 in the "**receiver circuit**" (§IX.A.1(e)) of the modified *Okada* portable device to implement features similar to *Nguyen*'s under-voltage lockout (UVLO) features such that it would begin drawing current only when the output of the "**receiver rectifier circuit**" reaches a set minimum voltage value for charging the battery. (Ex. 1002, ¶171.) A POSITA would have appreciated *Nguyen*'s guidance that such features (e.g., a UVLO circuit) would "keep[] the rest of the circuitry of an integrated circuit disabled until the power supply reaches a specified level," such that "[the] circuit would *keep the integrated circuit supply current at zero until the specified voltage is reached*." (Ex. 1066, ¶3:34-41; Ex. 1002, ¶171.) Also that similar features implemented in the modified *Okada* device as noted above would have prevented unwanted power/current drawn by PDA3/battery that does not meet its required operating/powering requirements, consistent with *Okada*'s and *Nguyen*'s teachings. (Ex. 1066, ¶3:34-41; Ex. 1002, ¶171; Ex. 1005, ¶¶0057, 0069.) Especially since it

was conventional practice to control a battery charging process to prevent over/under-charging the battery, consistent with that described by *Okada*. (Ex. 1002, ¶171; Ex. 1005, FIG. 3, ¶¶0074-0077; Ex. 1037, 1:35-2:22.)

A POSITA would have had the skill and rationale to configure/implement, and reasonable expectation of success in achieving, such modification. (Ex. 1002, ¶172.) Especially where, as noted, it was known to employ mechanism/features to control power/current draw when supplying power to a device/battery to mitigate potential damage or undesired operations. (*Id.*) Thus, such modification would have involved applying known technologies/techniques to yield the predictable result of a portable device having a battery charging circuit that safely draws current only when *e.g.,* the receiver rectifier circuit output reaches a set minimum voltage value, consistent with that discussed above by *Nguyen* and known in the art. (*Id.*) *KSR* at 416-18.

j) wherein when a current is generated in the receiver coil inductively by the primary coil in the base unit, the current is rectified and smoothed by the receiver rectifier circuit and is used by the voltage regulator to power and activate the microcontroller and used by the battery charging circuit to charge the battery of the portable device; and

The *Okada-Odendaal-Cho-Tetlow-Nguyen* combination discloses/suggests this limitation. (Ex. 1002, ¶¶173-175.) As explained, signal(s) transmitted from coil 19 in the modified system inductively generates a current in coil 41 ("**a current is**

generated in the receiver coil inductively by the primary coil in the base unit"). (§§IX.A.1(a)-(c), IX.A.1(f).) Indeed, when PDA3 is placed on cradle 4, circuit 33 of PTM10 applies a carrier wave to primary coil 19, and a voltage, and thus current, is induced on secondary coil 41. (*Id.*; Ex. 1005, ¶¶0056-0057, 0062-0063; Ex. 1002, ¶173.) The induced current is rectified/smoothed by circuits 42/43/44 ("**the current is rectified and smoothed by the receiver rectifier circuit**.") (Ex. 1005, ¶¶0047, 0057, 0063; §IX.A.1(f).)

The analysis for limitation 20(h) explains that, in the modified *Okada* device/system, a "**voltage regulator**" is implemented/configured such that it "provide[s] a regulated voltage to power the microcontroller" as implemented in the modified portable device. (§IX.A.1(h).) For similar reasons, rationale, and with a similar expectation of success as explained for limitation 20(h), a POSITA would have understood and/or been motivated to configure, the above-discussed "**voltage regulator**" such that when it provide(s) "**power**" to the "**microcontroller**," it "**activate[s]**" it to facilitate the feedback control operations discussed by *Okada* (*e.g.*, activate circuits 46/47 (part of "microcontroller" (including as configured/modified) to generate/transmit device information to PTM10 for controlling power transfer operations)). (Ex. 1002, ¶174; §§IX.A.1(a)-(i).) Such modification would have been consistent with *Okada*'s teachings, which explain that the rectified/smoothed current from the "**rectifier circuit**" is used to power/activate

circuits 46/47. (Ex. 1005, ¶0058, ¶¶0056-0057; §IX.A.1(g); Ex. 1002, ¶174.) Thus, for reasons discussed above, a POSITA would have found it obvious to configure the "voltage regulator" (§IX.A.1(h)) to use the rectified/smoothed voltage from the "rectifier circuit" (§IX.A.1(f) "**to power and activate the microcontroller**." (Ex. 1002, ¶174.)

The analysis for limitation 20(i) also explains how, in the modified *Okada* device/system, a "**battery charging circuit**" is implemented/configured such that it is "coupled to the output of the receiver rectifier circuit and coupled to the battery" such that the "**battery charging circuit**" uses the rectified/smoothed output (including current) "**to charge the battery of the portable device**." (§IX.A.1(i); Ex. 1002, ¶175.) For similar reasons, rationale, and with a similar expectation of success as explained for limitation 20(i), a POSITA would have understood and/or been motivated to configure, the above-discussed "**battery charging circuit**" such that it the "**current [] rectified and smoothed by the receiver rectifier circuit [] is…used by the battery charging circuit to charge the battery of the portable device**," consistent with the teachings of *Okada*. (*Id.*; Ex. 1005, ¶¶0047 (power-on reset circuit 48 receives the rectified/smoothed output signal of circuits 43/44 and provides "drive instructions to the power receiving control IC 50" to power/charge PDA3 using voltage clamp circuit 49, regulator 51, and charging control circuit 52), 0049-0051, 0057-0073, FIG. 3; §§IX.A.1(a)-(i).) Thus, for reasons discussed above,

a POSITA would have found it obvious to configure the "battery charging circuit" (§IX.A.1(i)) to provide features like that recited in limitation 20(j). (Ex. 1002, ¶175.)

> **k) wherein upon powering and activation of the receiver circuit by the primary coil in the base unit, the receiver circuit is configured to:**
>
> **l) communicate to the base unit information corresponding to a voltage or current value at the output of the receiver rectifier circuit induced by the primary coil, a unique identifier code, a manufacturer code, a charge algorithm profile, and a power requirement; and**

Okada-Odendaal-Cho-Tetlow-Nguyen in view of *Berghegger*, *Calhoon*, and *Black* discloses/suggests this limitation. (Ex. 1002, ¶¶176-198.)

The analysis for limitation 20(j) explains how in the modified *Okada* system/device, the "**microcontroller**" (part of "receiver circuit") is powered and activated via the "**voltage regulator**'s" use of the rectified/smoothed "current generated in the receiver coil inductively by the primary coil" to facilitate the feedback control power/charge transfer operations discussed by *Okada*. (§IX.A.1(j); Ex. 1002, ¶177.)

As explained, those power/transfer operations include circuit 33 in PTM10 applying a carrier wave to primary coil 19, which is used (after rectification/smoothing (circuits 42/43/44) to power/activate *e.g.*, circuits 46/47 (§IX.A.1(g)) and cause power-on reset circuit 48 to "drive instructions" to "control IC 50" to power/charge PDA3/battery. (§IX.A.1(j).) To configure the system to

transfer appropriate power for the specific portable device (PDA3), circuit 47 modulates a carrier wave, based on PDA3's information, and provides the signals to PTM10 through receiver coil 41 and primary coil 19. (Ex. 1005, ¶¶0057, 0064, FIG. 3.) After demodulation (circuit 35), evaluation circuits 36/37/38 of PTM10 use that information to "perform various decision-making processes" associated with powering/charging PDA3/battery. (Ex. 1005, FIG. 2, ¶¶0042, 0057; *id.*, FIG. 3, ¶¶0060-0077; §§IX.A.1(b)-(c), IX.A.1(g).) The device information modulated by circuit 47 (part of "**receiver circuit**" (§IX.A.1(e)) includes, *e.g.*, "power consumption information" ("**a power requirement**") that is used to determine the power requirement/level for PDA3/battery. (Ex. 1005, ¶¶0057, 0063-0064, 0069-0073, FIG. 3; Ex. 1002, ¶178.) Thus, for reasons explained above, the modified *Okada* system would have been configured to perform similar features in accordance with the configurations to PTM10/PRM40 components as explained above, such that "**upon powering and activation of the receiver circuit by the primary coil in the base unit, the receiver circuit is configured to… communicate to the base unit information corresponding to… a power requirement**." (§§IX.A.1(a)-IX.A.1(j); Ex. 1002, ¶178.)

While not expressly stated/disclosed by *Okada*, a POSITA would have found it obvious to configure the modified *Okada* device/system to include in such communication, "**information corresponding to a voltage or current value at the**

output of the receiver rectifier circuit induced by the primary coil" in view of *Berghegger*. (Ex. 1002, ¶179.)

Berghegger discloses a system for inductively powering/charging a device/battery. (Ex. 1006, FIGS. 1a-1b, 4-6, Abstract, 1:65-2:17, 2:18-3:30, 5:27-30, 6:12-19, 6:37-45; *see also id.*, 3:58-61, 4:12-6:4, 6:5-15, 6:38-40 ("charging tray" and "mobile...telephone"); Ex. 1002, ¶¶100-108, 180.)

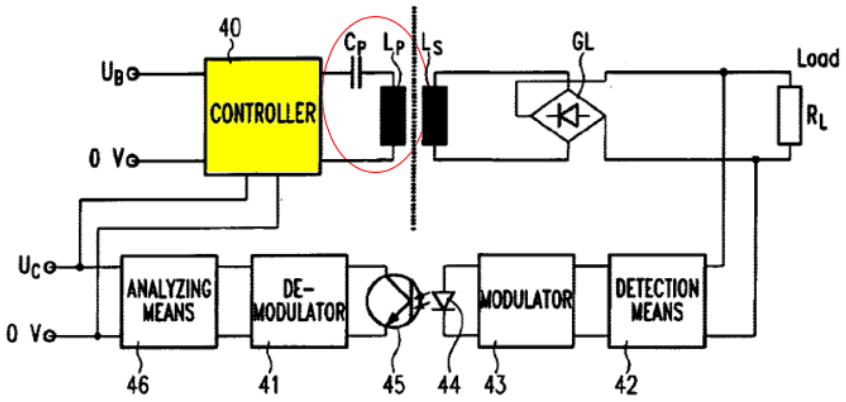

Fig.4

As demonstrated above and below, *Berghegger* is in the same technical field as the '371 patent and *Okada* (with the other asserted art), and discloses features reasonable pertinent to particular problem(s) the inventor for the '371 patent (and POSITA) was trying to solve. (§§IX.A.1(a)-(k); Ex. 1001, Abstract, 1:50-5:17; Ex. 1006, Abstract, 2:18-20; Ex. 1002, ¶181.) Accordingly, a POSITA would have consulted *Berghegger* in context of designing/implementing the above-discussed modified *Okada* device/system. (Ex. 1002, ¶181.)

Indeed, similar to *Okada*'s closed-loop feedback power/charging operations (Ex. 1005, ¶¶0057, 0064; *supra*), *Berghegger* uses a closed-loop feedback configuration, where controller 40 receives a control signal U_C that "depends on the power demand of the secondary side," *e.g.*, the voltage across the load R_L ***or at the output of a receiver rectifier circuit GL*** to perform charging operations, including regulating/adjusting the output power/voltage provided to the load. (Ex. 1006, Abstract, 3:51-4:50, 4:51-61, 4:62-5:64, 6:16-29, 6:60-61). The FIG. 5 configuration (below) is similar to FIG. 4 (Ex. 1006, 5:65-6:37), but where U_C is provided using coils L_S and L_P. (*Id.*, 6:50-53, 6:53-8:8; Ex. 1002, ¶182.)

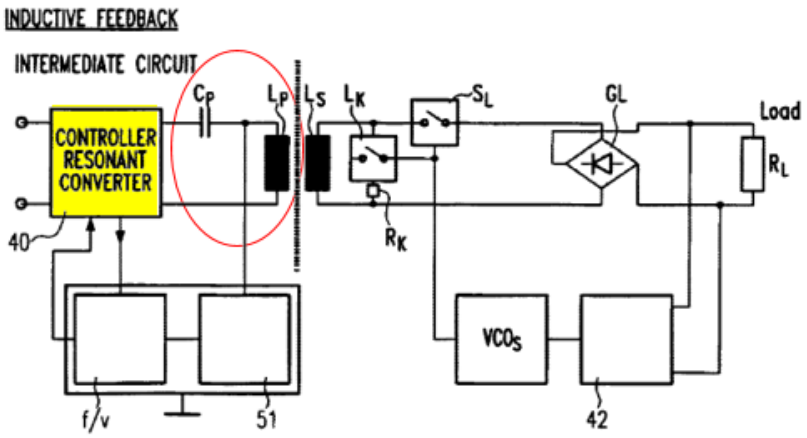

Fig.5

Thus, *Berghegger* discloses providing to a charger "**information corresponding to a voltage or current value at the output of [a] receiver rectifier circuit induced by [a] primary coil**." (*Id.*; Ex. 1002, ¶182.)

A POSITA would have appreciated the benefits/advantages *Berghegger*'s techniques/configurations would have provided to the modified *Okada* system/device. (§§IX.A.1(a)-(j); Ex. 1002, ¶183.) Namely, a POSITA would have recognized that the modified system/device, operating consistent with *Okada*'s teachings, would use device information to control/adjust power delivery in a closed-loop feedback fashion, but have done so at the **onset** of charging, **not during** charging. (Ex. 1005, ¶¶0069-0076, FIG. 3.) In contrast, *Berghegger* teaches that power required by a load "is **variable in time**" and thus a closed-looped control feature (similar to that described by *Berghegger*) would allow for accurate adjusted power delivery based on a varying power demand **during** powering/charging operations, considered at the output of a rectifier circuit (that supplies rectified signal(s) to the load) (*e.g.*, control signal U_C that "depends on the power demand of the secondary side," *e.g.*, voltage across the load R_L or output of rectifier GL). (Ex. 1006, 6:12-15, FIG. 5; *supra* regarding *Berghegger*.)

Thus, *Berghegger*'s teachings would have motivated a POSITA to configure the modified *Okada* system/device such that PTM10 components adjusts the power delivered to PDA3 based on received device information associated with a "**voltage or current value at the output of the receiver rectifier circuit**" (§IX.A.1(f)) similar to the teachings of *Berghegger*. (Ex. 1002, ¶184.) A POSITA would have recognized obtaining/including such rectifier output value information in the

information communicated in the current modulated signal(s) from the "receiver circuit" in PRD40 (§§IX.A.1(g) (current modulation), IX.A.1(j), IX.A.1(k)—above) would have improved/complimented the above-modified *Okada* system/device to allow fine tuning of the determined power level while PDA3/battery is charged. (Ex. 1002, ¶184.) For example, it would ensure "a sufficient amount" of power is "available on the secondary side" **during** power delivery (whether initiated at a low/intermediate/high level as in *Okada*) while also preventing "an unnecessarily large amount of energy being consumed on the primary side" to achieve a "more energy-efficient continuous operation" as suggested by *Berghegger*. (*Id.*; Ex. 1006, 2:28-44; Ex. 1005, ¶¶0069-0073).

A POSITA would have considered/implemented such modification in various ways. (Ex. 1002, ¶185.) For example, a POSITA would considered leveraging/modifying *Okada*'s features/components that are used to receive/pass/process device information in PTM10 for power transfer control (*e.g.*, demodulator 35, circuits 36-38 (Ex. 1005, ¶0064)) to achieve the noted beneficial power delivery features during charging/powering operations. (Ex. 1002, ¶185.) For example, components in circuit 20 would have been configured to process/assess the received rectifier circuit current/voltage output value to provide a signal (like U_C in *Berghegger*) to control the operating frequency of the charger

components/circuits that facilitate the transfer of selected power (*e.g.*, switching circuit 15, etc.) to adjust power delivery during charge operations. (*Id.*)[6]

A POSITA would have had rationale and skills to implement, and expectation of success in achieving, such modification, especially since it would have involved the use of known technologies/techniques (*e.g.*, as disclosed/suggested by *Okada-Berghegger*) that would have predictably led to the modified *Okada* system including in the information communicated from the "receiver circuit" "**information corresponding to a voltage or current value at the output of the receiver rectifier circuit induced by the primary coil**" as claimed. (*Id.*, ¶186.)

A POSITA would have also been motivated, and found obvious, to consider and implement use of other information to further such power transfer control operations, especially in light of *Calhoon*. (*Id.*, ¶187.) *Calhoon* is in the same technical field as *Okada* (and the other asserted art) and the '371 patent, and discloses features reasonable pertinent to particular problem(s) the inventor for the '371 patent and POSITA was trying to solve. (§IX.A.1(a); Ex. 1041, FIGS. 3, 5A, 6, ¶¶0003-0010, 0022, 0029, 0034, 0045-0050, 0065; 1005, ¶0110, 0147-0151; Ex.

---

[6] Other successful designs/configurations would have been contemplated/implemented by a POSITA to achieve the same features/functionalities as discussed. (Ex. 1002, ¶185 n.9.)

1001, 1:60-5:17; *infra*; Ex. 1002, ¶187.) Thus, *Calhoon* would have been consulted by the inventor and POSITA looking to design/implement a power/charging apparatus/system like that described by *Okada* (as modified above). (Ex. 1002, ¶187.)

Calhoon discloses an inductive charging system for a mobile device's battery charger/battery pack. (Ex. 1041, Abstract, FIGS. 2-3 (below), ¶¶0002, 0008-0010, 0022-0029, 0045, 0065; Ex. 1002, ¶¶97-99, 188.)

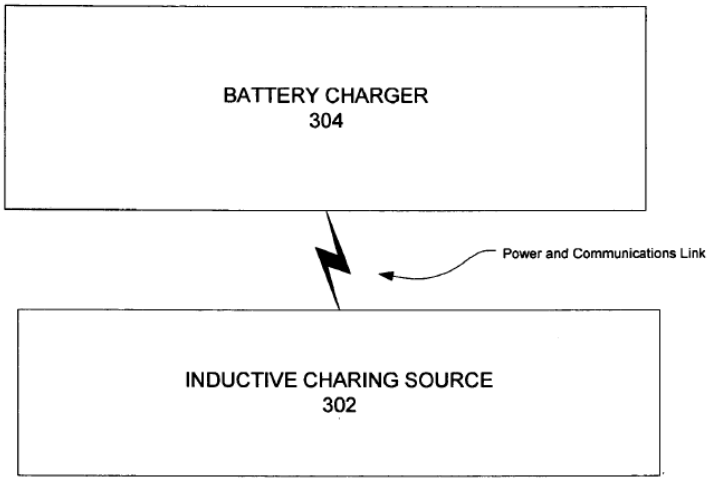

FIGURE 2

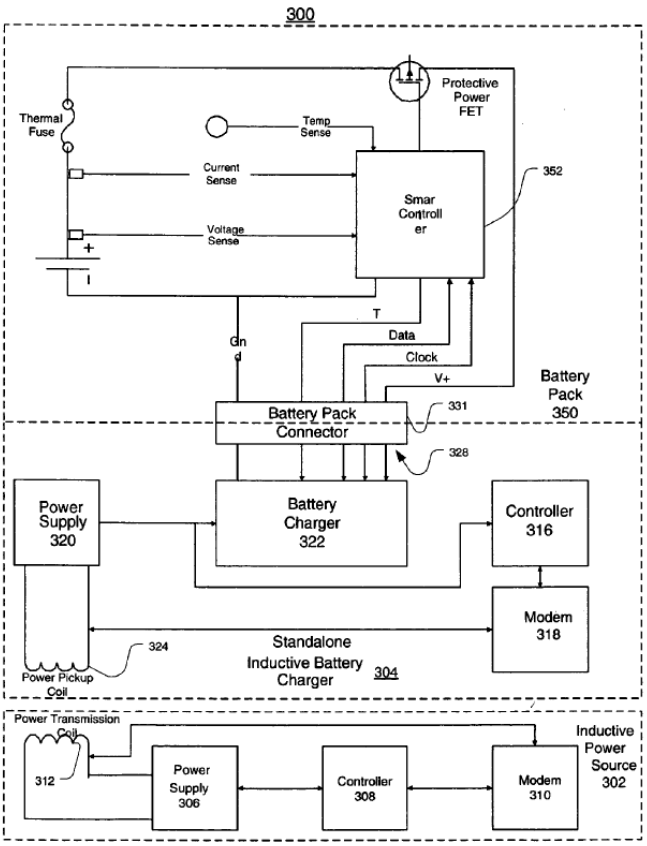

FIGURE 3

Calhoon describes obtaining an **ID/serial number of a power receiver**, *e.g.*, a battery charger (charger assembly 304) or a battery (battery pack 350) and wirelessly communicating that information to a power source (*e.g.*, inductive charging source 302). (*Id.*, Abstract, ¶¶0022, 0034, 0046-0048, 0050-0052, 0056, FIGS. 3, 5A, 6; Ex. 1002, ¶189.) Controller 316 in battery charger 304 may include data, "such as **a battery charger ID number**, **serial number**, **manufacturer's name**," which can be used "for novel power operations…, such as shown in FIGS. 5A, 5B, and 6." (Ex. 1041, ¶0038; *id.*, FIGS. 5A-6, ¶¶0034, 0042-0044, 0045-0048, 0049, 0050-0052, 0056.) Charging source 302 "can request other information

relevant to the battery charger assembly 304" (e.g., battery charger ID or charger/battery pack serial number), which charger assembly 304 transmits. (*Id.*, ¶0047.) Thus, *Calhoon*'s power receiver includes "**a manufacturer code**" (*e.g.*, serial number and/or manufacturer's name) and "**a unique identifier code**" (*e.g.*, a battery charger ID number), consistent with *Calhoon*'s disclosure that the information "can be used **for security, data integrity**, or other purposes." (*Id.*, ¶0047; *id.*, FIGS. 3-5A, ¶¶0036-0037, 0040-0043.)

In light of such teachings/suggestions, a POSITA would have been motivated, and found obvious, to further configure the above-modified *Okada* system to include in the information communicated by the disclosed "**receiver circuit**" device serial number and/or manufacturer's name information ("**unique identifier code**"/"**manufacturer code**") to verify and/or authenticate each portable device for proper/authorized use. (Ex. 1002, ¶190.) Thus, in light of *Calhoon*, a POSITA would have been further motivated to configure the above-modified *Okada* system/device to maintain, transmit, and use such identifier/name information to ensure a properly verified and positioned/aligned portable device receives appropriate power in accordance with the charging/power operations discussed above. (§§IX.A.1(a)-IX.A.1(j); *supra* (this section); Ex. 1002, ¶190.) *KSR* at 416-18.

A POSITA would have had the skill and rationale in implementing, and reasonable expectation of success in achieving, such modification, especially where implementing it would have involved applying known technologies/techniques (*Okada*, *Calhoon*)) to verify/authenticate/confirm receiving device(s) to control power transfer in accordance with the modified operations/components discussed above. (*Id.*; Ex. 1002, ¶191.)

Moreover, the modified *Okada* combination does not expressly disclose communicating "**a charge algorithm profile**," a POSITA would been motivated, and found obvious, to include such a feature in view of *Black* to enhance/compliment how the modified system/device provides appropriate power for charging PDA3's battery. (Ex. 1002, ¶192.)

As explained, *Okada* discloses using received device information to determine a power level (low/intermediate/high) based on power requirements of the portable device. (Ex. 1005, FIGS. 3, 5, ¶¶0069, 0073-0076, 0090; Ex. 1002, ¶193.) Moreover, it was known to use charging algorithm profile(s) to control mobile device battery charging (*e.g.*, to avoid overcharging). (Ex. 1002, ¶193; Ex. 1001, 38:13-16 (acknowledging "[m]ost mobile devices today already include a Charge Management IC…to control charging of their internal battery").) Consistent with such knowledge, *Black* describes communicating charging profile information for

controlling charging operations in a power transfer system similar to those of *Okada-Calhoon*.

Black discloses inductive charging a portable device battery, which includes a transceiver for communications with a charger. (Ex. 1007, Abstract, FIGS. 1-2 (below), ¶¶0002, 0013-0017.) Battery 100/200 includes a charging coupler 108/208 coupled to cell 104/204 through charging circuit 110/210, and communications coupler 112/212. (*Id.*, ¶¶0015, 0017, 0018 ("***first coil 212 may be a portion of the second coil 208***").)

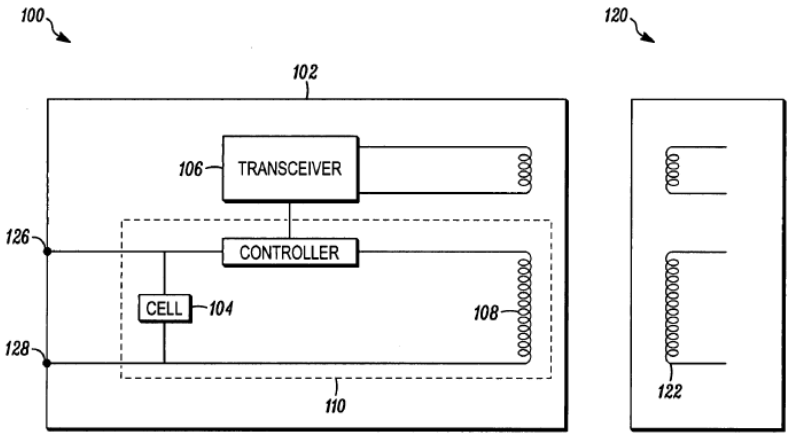

FIG. 1

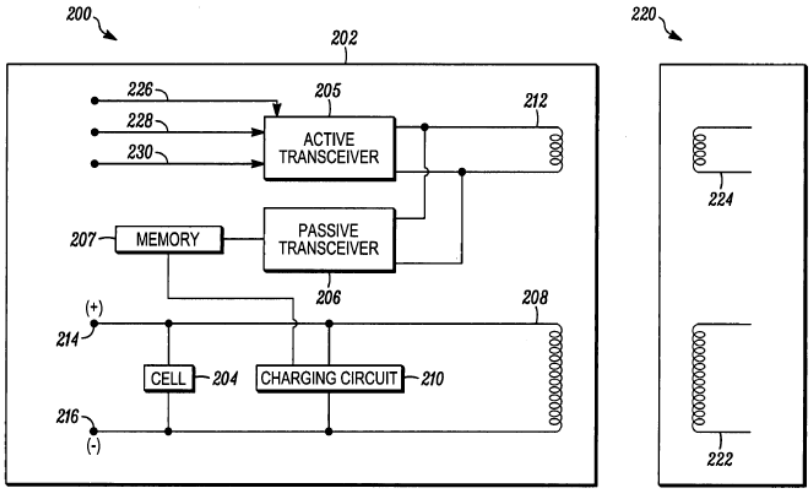

FIG. 2

When battery is in range of the charger, communications between them "may take place and inductive charging can occur." (*Id.*, ¶0019; Ex. 1002, ¶¶109-111, 194.)

Black is in the same technical field as the modified *Okada* combination, and the '371 patent, and discloses features that were reasonable pertinent to one or more particular problems the inventor for the '371 patent (and POSITA) was trying to solve. (*Supra*; §§IX.A.1(a)-(b); Ex. 1007, Abstract, FIGS. 1-4, ¶¶0002, 0005, 0012-0028 (and *infra*); Ex. 1001, 1:50-5:17, 11:31-39; Ex. 1002, ¶195.) Therefore, a POSITA would have considered *Black* in context of the above-modified *Okada* combination. (Ex. 1002, ¶195.)

Black discloses a procedure for "device identification and charging," where battery information is requested/received upon detecting battery presence. (Ex. 1007, FIG. 3 (below), ¶0020.)

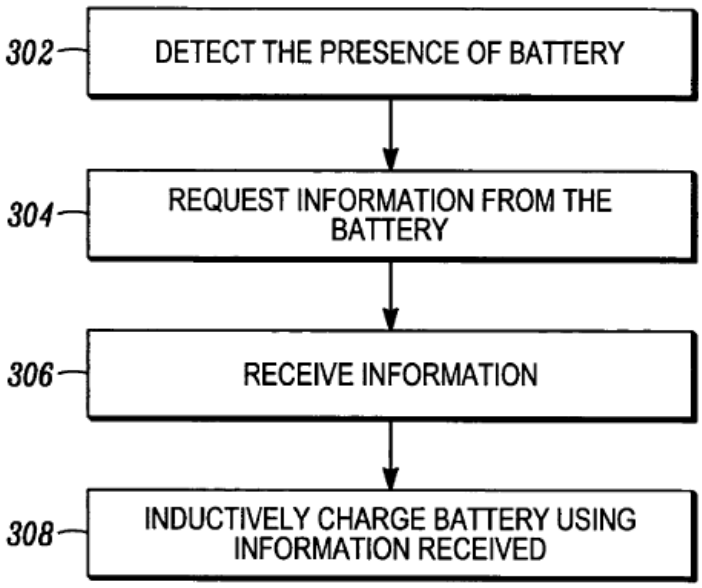

The information may include, *e.g.*, device ID and additional information (*e.g.*, device-type battery 100 is coupled, encryption information, "***battery characteristics*** *or* ***charging profile***." (*Id.*, ¶0021; Ex. 1002, ¶196.) Charger 120 inductively charges the battery based on the received information. (*Id.*, ¶0022.)

In light of *Black,* a POSITA would have been motivated and found obvious to modify the above-modified *Okada* system to include a **charge algorithm profile** associated with PDA3/battery with the above-discussed device information communicated by the "**receiver circuit**" (*supra*; §IX.A.1(e)) to enable PTM10 components (*e.g.,* circuits 36/37/38 or others configured accordingly) to determine/provide appropriate power for charging PDA3's battery in accordance with the closed loop feedback features implemented by the modified *Okada* system (*supra*; *infra* §IX.A.1(m); Ex. 1002, ¶197.) A POSITA would have appreciated

receiving charging algorithm profile information would have allowed the modified system to accurately/properly adjust the power suitable for each specific battery/device determined to be capable of, and properly positioned/aligned, to receive such power, as discussed above. (*Supra* (this section); Ex. 1002, ¶197.)

A POSITA would have had reasons to consider and implement such features given it was known different types of batteries/portable devices have different power/charge characteristics/algorithm-profiles. (Ex. 1002, ¶198; Ex. 1007, ¶0003; Ex. 1037, 1:56-2:6, 2:18-19, 6:51-7:2, 7:36-53, FIGS. 4A-4C; Ex. 1039, Abstract, 3:23-35, FIG. 1, 5:20-34.) As such, a POSITA had the requisite motivation/skills to implement, and reasonable expectation of success in achieving, such modification. (Ex. 1002, ¶198.) Especially since it would have involved applying known technologies/techniques (*e.g.,* charging algorithms profiles to control charging) to yield the predictable result of including additional information in the information fed back to cradle 4 that would have allowed/promoted efficient/accurate power delivery based on specific device information, consistent with the features disclosed by the above-modified *Okada* combination. (*Id*., ¶198.) *KSR*, 550 at 416-18.

m) periodically communicate to the base unit additional information corresponding to a presently induced output voltage or current of the receiver rectifier circuit to enable the base unit to regulate in a closed loop manner the output voltage or current of the receiver rectifier circuit during the charging of the portable device.

The *Okada-Odendaal-Cho-Tetlow-Nguyen-Berghegger-Calhoon-Black* combination discloses/suggests this limitation. (Ex. 1002, ¶¶199-202.)

As explained for limitation 20(l), the modified *Okada* system would have been configured to communicate information corresponding to a voltage or current value at the output of the receiver rectifier circuit induced by the primary coil upon activation/power to the receiver circuit's microprocessor. (§IX.A.1(l).) Also explained for *e.g.*, limitations 20(j)-(l), the modified system/device would have been configured to provide a "closed loop" feedback operations that allow the system/device to control/regulate the power delivered for charging a specific portable device/battery (*e.g.,* PDA3/battery) by using information associated with a "voltage or current value at the output of the receiver rectifier circuit" induced by the primary coil. (§§IX.A.1(j)-IX.A.1(l); Ex. 1002, ¶200.)

As *Okada* explains, "[e]ven after power transmission has begun," device information is periodically/continuously transmitted from PRM40 to PTM10 in response to the periodic/continuous transmission of the carrier wave by circuit 33,

to maintain/control power delivery operations. (§§IX.A.1(a)-(b), IX.A.1(g), IX.A.1(j); Ex. 1005, ¶0074-0077, FIG. 3 (below); Ex. 1002, ¶201.)

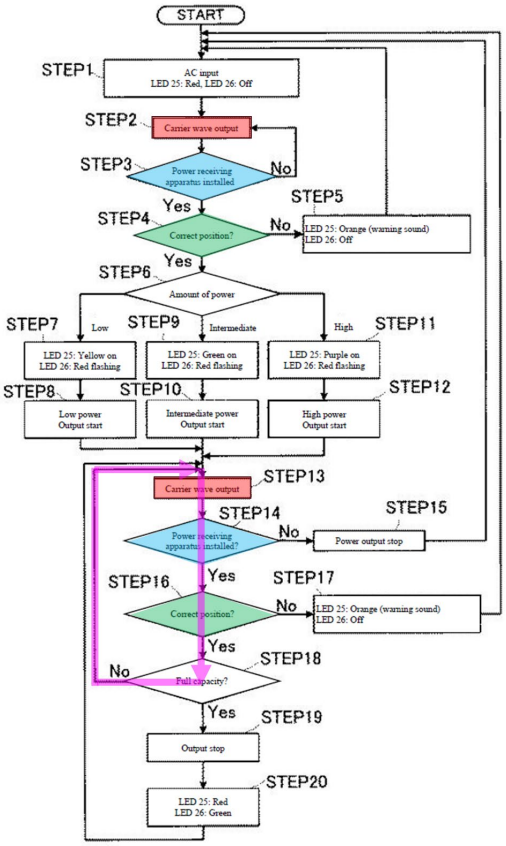

Thus, consistent with *Okada*'s teachings (and *Berghegger* (*see* §§IX.A.1(k)-(l)) in context of the above-discussed modified *Okada*'s system/device, and for similar reasons explained above (including rationale, POSITA's skills/knowledge and expectation of success), a POSITA would have found it obvious to configure the above-discussed modified system/device such that the "**receiver circuit**" (§IX.A.1(e)) "**periodically communicate[s] to the base unit** [cradle 4] **additional information corresponding to a presently induced output voltage or current of**

the receiver rectifier circuit" (voltage measured at the output of the "rectifier circuit" (§IX.A.1(f)). (§IX.A.1(l); Ex. 1002, ¶202.) Such "**information**" would have enabled cradle 4 to "**regulate in a closed loop manner the output voltage or current of the receiver rectifier circuit during the charging of the portable device**," consistent with that discussed above for limitation 20(l), because, as explained, the modified *Okada* system/device would have been configured to provide/adjust power transfer based on the device power demand information, *e.g.*, voltage measured at the output of a rectifier circuit, communicated by PDA3's "receiver circuit" in a closed loop manner during charging/powering of a portable device, consistent with the periodic/continuous feedback operations described by *Okada-Berghegger*. (§§IX.A.1(j), 1(l); Ex. 1002, ¶202.) Thus, a POSITA would have had similar motivation, capability, and expectation of success to implement such features as those explained above for limitations 20(j)-(l). (Ex. 1002, ¶202.)

2. Claim 22

a) The portable device of claim 20, wherein the receiver circuit further comprises a limiter to limit the output voltage of the receiver rectifier circuit to a maximum value within a safe operating range of the battery charging circuit.

The *Okada-Odendaal-Cho-Tetlow-Nguyen-Berghegger-Calhoon-Black* combination discloses/suggests this limitation. (Ex. 1002, ¶¶203-206; §IX.A.1.) As discussed in limitation 20(g), voltage clamp circuit 49 (optional part of

"**communication and control circuit**" of the "**receiver circuit**") may further include voltage clamp circuit 49 that "receives the output from the smoothing circuit 44 and converts the output to a prescribed voltage." (§IX.A.1(g); Ex. 1005, ¶¶0047-0048; Ex. 1002, ¶204.) As a POSITA would have understood, a clamp circuit (like that disclosed by *Okada*), was known to provide a voltage not exceeding a certain set limit. (Ex. 1002, ¶204; Ex. 1067, Abstract, ¶0005 ("voltage supply…***rises to the clamp voltage limit controlled by the high voltage clamp 130***."), claim 1.) A POSITA was also aware that excessive voltage to a device/battery can cause damage or undesirable operations, and thus would have considered design options to avoid/mitigate such issues. (Ex. 1002, ¶204; Ex. 1065, ¶¶0033-0039 (voltage converter/regulator used to avoid "voltage spikes" and increase "operating reliability"); Ex. 1060, ¶¶0013, 0016, 0097.) Indeed, *Okada* provides mechanisms that can prevent overcharging PDA3's battery. (Ex. 1005, FIG. 3, ¶¶0074-0077.)

Recognizing *Okada*'s use of a clamp circuit in context of such knowledge/understandings, a POSITA would have been motivated, and found obvious, to modify the "**receiver circuit**" in the modified *Okada* device to include voltage limiting circuitry/component ("**limiter**") and/or configure the voltage clamp circuit 49 to include mechanisms/circuitry, to limit the output voltage of the "**receiver rectifier circuit**" (§IX.A.1(f)) to be within a range that allows safe/proper operation of the "**battery charging circuit**" (§IX.A.1(i)). (Ex. 1002, ¶205.) As

noted, a POSITA understood different devices/battery components have different power characteristics (§IX.A.1(l) (citing Exs. 1007, 1037, 1039), and also that such components have designed/specified maximum operating characteristics (*e.g.,* max current/voltage/power, etc.) to ensure proper and safe operations. (Ex. 1002, ¶205; Ex. 1001, 64:58-61.) Indeed, a POSITA would have understood that each circuit component, including the "**battery charging circuit**" and the battery it charges, cannot sustain a signal having an excessively high voltage level, and thus have respective/corresponding finite operating voltage range(s) that the designer/manufacture deemed safe to operate within. (Ex. 1002, ¶205.) Consistent with such knowledge, a POSITA would thus have been motivated, and found obvious, to configure the modified device/system's "receiver circuit" with "**a limiter to limit the output voltage of the receiver rectifier circuit to a maximum value within a safe operating range of the battery charging circuit**" as claimed. (Ex. 1002, ¶205.)

A POSITA would have had the skill and rationale, and reasonable expectation of success in achieving, such modification, especially since it would have involved use of known technologies/techniques (*e.g.,* voltage clamps, limiter circuitry, overcharging mechanisms/techniques for blocking excessive voltage signals to protected components). (Ex. 1002, ¶206; *Okada*, Ex. 1067; Ex. 1060, ¶0087.) Such modification would have predictably yielded an inductive power transfer system

with a portable device having a clamp/limiter that ensures the voltage of its receiver rectifier circuit provided to a battery charging circuit (§§IX.A.1(h)-(m)) is within a safe operating range, as discussed. (Ex. 1002, ¶206.) *KSR* at 416-18.

B. Ground 2: Claim 21 is obvious over *Okada*, *Odendaal*, *Cho*, *Tetlow*, *Nguyen*, *Berghegger*, *Calhoon*, *Black*, and *Labrou*

1. Claim 21

a) The portable device of claim 20 further comprising a magnetic core of ferromagnetic material within a central area of the receiver coil and a near field communication (NFC) antenna and circuitry for communication of data with other devices.

The *Okada-Odendaal-Cho-Tetlow-Nguyen-Berghegger-Calhoon-Black* combination in view of *Labrou* discloses/suggests this limitation. (Ex. 1002, ¶¶207-214; §IX.A.1.)

Consistent with the combined teachings above (*e.g.*, §IX.A.1(c)), *Cho* describes secondary coil 50-3 ("**receiver coil**") (red below) is formed on two ferrite sheets 49-11/49-12 (yellow) having a **central protrusion part** 49-13 **("magnetic core")** and an outer protrusion part 49-14. (Ex. 1061, 22:4-23:3; §IX.A.1(d).)

FIG. 11

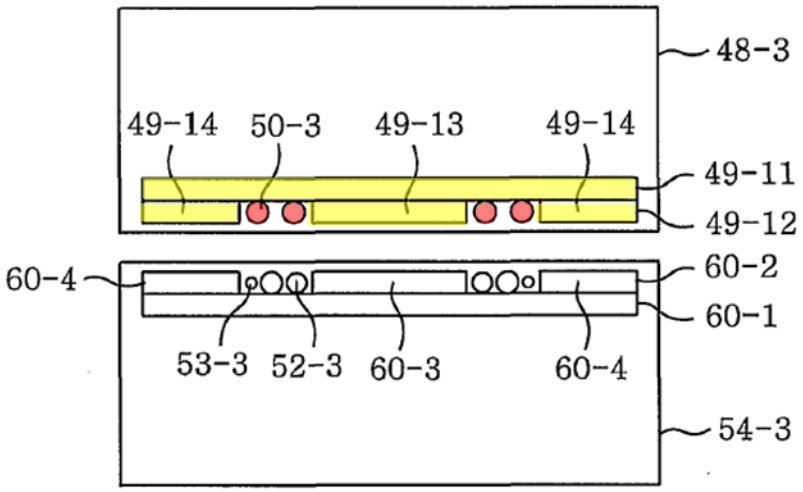

In light of such teachings/suggestions (*Odendaal-Cho* in context of a POSITA's state-of-art knowledge (§§IX.A.1(c)-(d)), it would have been obvious to configure the receiver coil 41 in the modified *Okada* system/device (§IX.A.1(c)) to have a central ferrite protrusion part/core ("**a magnetic core of ferromagnetic material within a central area of the receiver coil**") for reasons discussed for limitation 20(d), including, *e.g.*, improving the charging efficiency, as was known in the art. (Ex. 1002, ¶208; Ex. 1061, 18:20-24 ("by tailoring a thickness of a desired ferrite and a thickness and a width of a wire, a charging device having a high charging efficiency can be obtained without increasing a volume and a weight of a portable device."); §IX.A.1(d).)

A POSITA would have had the skill, knowledge, and rationale in implementing, and expectation of success in achieving, the above-modification, especially given the use/benefits of a ferrite core/material in secondary coils was known. (Ex. 1002, ¶209; Ex. 1059, ¶0012 (secondary coil having a ferrite core); Ex. 1061, 17:10-23:13 (ferrite material/core for inductive coils).) As such, a POSITA had the motivation and skills in configuring, and a reasonable expectation of success in achieving, the above-modification, especially in light of the teachings from *Cho*, *Odendaal*, in context of a POSITA's state-art-knowledge concerning the use of ferrite material to enhance inductive energy transfer efficiency. (§§IX.A.1(c)-IX.A.1(d); Ex. 1002, ¶209.) *KSR* at 416-18.

Moreover, while the above-modified *Okada* device/system does not disclose the "portable device" using NFC technologies/techniques to communicate data as claimed, a POSITA would have found it obvious to implement such features in view of *Labrou*. (Ex. 1002, ¶210.)

Labrou, like *Okada* (and other asserted art), is in the same technical field as the '371 patent, and discloses features reasonable pertinent to particular problem(s) the '371 patent inventor and a POSITA was trying to solve. (§IX.A.1; Ex. 1001, Abstract, 1:60-5:17, 11:66-12:19, 39:58-64; Ex. 1062, ¶0009, ¶0185; Ex. 1002, ¶211.) Therefore, a POSITA had reasons to consider/consult *Labrou* when looking to design/implement the above-modified *Okada* device/system. (Ex. 1002, ¶211.)

Labrou discloses use of an NFC chip coupled to a mobile device 104 and being a "part of the circuitry thereof," allowing software of mobile device 104 to "communicate with the…NFC chip." (Ex. 1062, ¶0185, FIG. 1.) *Labrou* explains that mobile device 104 may be used for "physical POS [point of sale] transactions," providing a message for "authenticat[ing] and approv[ing] the transaction" via an NFC signal. (*Id.*, ¶¶0022-0026, 0185.) If the NFC chip is "integrated with the circuitry of [the mobile device]," the mobile device may send a confirmation message to the POS upon the consumer entering a PIN on the mobile device. (*Id.*, ¶0185.) A POSITA would have understood that the disclosed NFC chip necessarily includes "**antenna and circuitry** for communication of data with other devices" given it communicates with an RFID reader at the POS. (*Id.*, ¶0185), Ex. 1002, ¶¶112-113, 212.) Without such an antenna, such wireless (radio frequency) communications would not occur as disclosed. (*Id.*)

A POSITA would have been motivated and found obvious to implement known NFC technologies/functionalities (NFC antenna/circuitry), similar to that taught by *Labrou* and known in the art, in *e.g.*, PDA3 ("portable device") to provide additional functionalities/techniques for PDA3 to communicate data consistent with that known in the art, and consistent with features taught by *Okada* and *Labrou* (*e.g.*, use of mobile device at a POS for authentication/approval). (Ex. 1002, ¶213.) Such

an implementation/modification would have allowed the portable device to perform/provide common communication techniques/technologies. (*Id.*)

A POSITA would have had the skill and rationale in implementing, and reasonable expectation of success in achieving, such modification. (Ex. 1002, ¶214.) Especially given it was known to employ NFC chip(s)/antenna/circuitry with mobile devices circuitry to provide the benefits of such near-field communications (e.g., POS transactions, etc.) (*Id.*). Thus, such modification would have involved applying known technologies/techniques (*e.g.,* known use of NFC antenna/circuitry) to yield the predictable result of providing a mobile device that is capable of providing conventional features, such as NFC-based POS transactions, consistent with that discussed by *Labrou* and known in the art. (*Id.*) *KSR* at 416-18.

C. Ground 3: Claim 23 is obvious over *Okada*, *Odendaal*, *Cho*, *Tetlow*, *Nguyen*, *Berghegger*, *Calhoon*, *Black*, and *Meadows*

1. Claim 23

a) The portable device of claim 20, further comprising an output disconnect switch configured to connect and disconnect an output power from the receiver circuit to the battery, wherein: the communication and control unit is further configured to control the output disconnect switch to disconnect the battery from the output power from the receiver circuit during at least some of the communication with the base unit.

Okada-Odendaal-Cho-Tetlow-Nguyen-Berghegger-Calhoon-Black in view of *Meadows* discloses/suggests this limitation. (Ex. 1002, ¶¶215-221.)

While the above-modified *Okada* combination does not expressly disclose "**an output disconnect switch**" as configured and controlled by "**the communication and control unit**" as recited in claim 23, a POSITA would have found it obvious to implement such features in view of *Meadows*. (Ex. 1002, ¶216.)

Meadows, like *Okada* (and other asserted art), is in the same technical field as the '371 patent and discloses features reasonable pertinent to particular problem(s) the '371 patent inventor and a POSITA was trying to solve. (§§IX.A.1; Ex. 1001, Abstract, 1:60-5:17, 38:3-6; Ex. 1060, FIG. 7A, Abstract, ¶¶0085-0097; Ex. 1002, ¶217.) Therefore, a POSITA had reasons to consider/consult *Meadows* when looking to design/implement the modified *Okada* system/device discussed above. (§IX.A.1; Ex. 1002, ¶217.)

Meadows discloses a battery protection IC 686 controlling a FET switch 688 ("**disconnect switch**") to ensure that battery 180 is not overcharged. (Ex. 1060, ¶¶0086-0087, FIG. 7A (annotated below).)

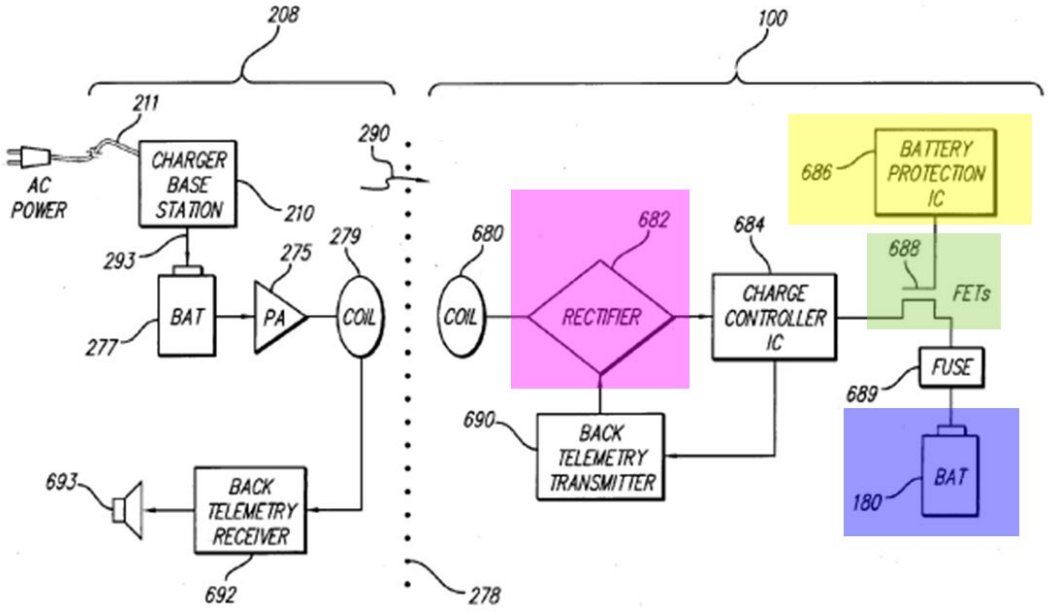

FIG. 7A

"IC 686, with its FET switch 688…**keeps the battery within safe operating limits**" during battery charging. (*Id.*, ¶¶0086-87.) If abnormality occurs when charging the battery (*e.g.*, overvoltage/undervoltage/short-circuit), "IC 686 **opens**…switches 688 to **prevent further charging**." (*Id.*, ¶¶0087-0089; *id.*, ¶0022.) Thus, FET switch 688 is "**an output disconnect switch**" that is "**configured to connect and disconnect an output power from [] receiver circuit to [a] battery**," where IC 686 is "**configured to control the output disconnect switch to disconnect the battery from the output power from**" a rectifier 682. (Ex. 1002, ¶¶114-116, 218.)

A POSITA would have been motivated and found obvious to configure the "**receiver communication and control circuit**" (or the "**the communication and**

control unit") in the above-modified *Okada* system/device (§IX.A.1) to control a switch-based battery protection mechanism (*e.g.*, features similar to how FET switch 688 is controlled by battery protection IC 686 as taught by *Meadows*) to prevent further supply of power from the "rectifier circuit" (of the "receiver circuit") to the PDA3 battery if abnormality occurs, *e.g.*, overvoltage/undervoltage/short-circuit (*e.g.*, by disconnecting the battery from the output power) during the charging process (which includes when "**the communication**" of information with cradle 4 ("**base unit**") occurs) (§IX.A.1(l)-IX.A.1(m) (demonstrating how "**the communication with the base unit**" also occur "**during**" the charging process); Ex. 1002, ¶219.) A POSITA would have understood charging abnormality would be detrimental to the battery, and cause potential safety issues. (Ex. 1060, ¶¶0013, 0016, 0097 (describing overcharging problems); Ex. 1002, ¶219.) A POSITA would have known that it was advantageous to address overcharging issues with respect to portable devices/batteries and configure/consider multiple ways to avoid overcharging (in case one fails). (*Id.*; Ex. 1002, ¶219.) Thus, while *Okada* relies on feedback information at the charging system to control/monitor full charge state (Ex. 1005, ¶¶0057, 0076, FIGS. 2-3), a POSITA would have found it beneficial to avoid overcharging in case such components/process fail to stop charging (due to disruptions, component/signal failure/issues, etc.) (Ex. 1002, ¶219.)

In light of the teachings/suggestions of *Meadows* and *Okada*, in context of a POSITA's state-of-art knowledge, and for reasons explained above, it would have been obvious to configure the modified *Okada* device with "**an output disconnect switch**" controlled by the "**communication and control unit**" (§IX.A.1(g)) to disconnect power from the receiver circuit to the battery **during** the charging process, which includes when "the communication(s)" occur with the base unit. (§IX.A.1(g)-IX.A.1(m); Ex. 1002, ¶220.)

A POSITA would have had the skill and rationale in implementing, and reasonable expectation of success in achieving, such modification. (Ex. 1002, ¶221.) Especially where it would have involved applying known technologies/techniques (*e.g.,* known switch-based mechanisms (such as battery protection mechanisms)) to yield the predictable result of providing portable device that minimizes/avoids voltage/power delivery to the device battery at appropriate times, consistent with that discussed above (*Meadows*, state-of-art knowledge). (Ex. 1002, ¶221.) *KSR* at 416-18.

D. Ground 4: Claim 30 is obvious over *Okada*, *Odendaal*, *Cho*, *Meadows*, and *Berghegger*

1. Claim 30

a) A portable device comprising:

b) a battery; and a receiver unit, coupled to the battery, configured to receive inductive power from an inductive charging system including a base unit with

a primary coil and associated circuit, the receiver unit comprising:

c) a receiver coil having a substantially planar shape and located parallel to a surface of the portable device so that an alternating magnetic field, when received through the surface of the portable device from the primary coil in the base unit in a direction substantially perpendicular to the plane of the receiver coil, inductively generates a current in the receiver coil to provide power inductively to the portable device when the portable device is placed on the base unit for charging the battery of the portable device;

For reasons discussed above in limitations 20(a)-(c), *Okada* alone and/or in combination with *Odendaal* discloses/suggests these limitations. (§§IX.A.1(a)-(c); Ex. 1002, ¶¶222-236.)

d) a ferrite material layer placed under the receiver coil on a side of the receiver coil opposite to the surface of the portable device;

The analysis for limitation 20(d) demonstrates how the *Okada-Odendaal-Cho* combination discloses/suggests "a ferromagnetic layer [which is also a "**ferrite material layer**" as claimed here] placed under the receiver coil on a side of the receiver coil away from [similar to being "**opposite to**" as claimed here] the surface of the portable device." (§§IX.A.1(d); Ex. 1002, ¶223.) Thus, for the same reasons explained in §IX.A.1(d), *Okada-Odendaal-Cho* discloses/suggests limitation 30(d). (Ex. 1002, ¶223.)

e) a receiver circuit powered by the inductive charging system, wherein the receiver circuit comprises:

f) a receiver rectifier circuit including a rectifier and a capacitor; and

g) a receiver communication and control circuit including a microcontroller to modulate the current in the receiver coil to communicate with the base unit while the receiver circuit is being powered by the inductive charging system; and

For reasons discussed above for limitations 20(e)-(g), the *Okada-Odendaal-Cho* combination discloses/suggests these limitations. (§§IX.A.1(e)-(g); Ex. 1002, ¶224.)

h) an output disconnect switch to interrupt a flow of current from an output of the receiver unit to the battery;

Okada-Odendaal-Cho in view of *Meadows* discloses/suggests this limitation. (Ex. 1002, ¶225.) The analysis for claim 23 demonstrates how the *Okada*-based combination in view of *Meadows* discloses/suggests "an **output disconnect switch** configured to connect and disconnect an output power from the receiver circuit to the battery." (§IX.C.1.) While the asserted combination involves modifications based on references, not asserted in Ground 4 (*Tetlow-Nguyen-Calhoon-Black*), the rationale, motivation, and expectation of success in implementing the proposed modification for claim 23 do not hinge on the teachings/suggestions from those other references. (§IX.C.1.) Thus, a POSITA would have had the same rationale, skill,

and expectation of success to modify the *Okada-Odendaal-Cho* combined device/system here in view of *Meadows* as discussed for claim 23. (*Id.*; Ex .1002, ¶225.) Indeed, a POSITA would have understood, when such a "switch" disconnects the output power from the receiver circuit to the battery (as explained in §IX.C.1), it also "**interrupt[s] a flow of current from an output of the receiver unit to the battery**," as recited in limitation 30(h). (Ex. 1002, ¶225.) Thus, for the same reasons discussed in claim 23, *Okada-Odendaal-Cho-Meadows* discloses/suggests this limitation. (Ex. 1002, ¶225.)

i) wherein when a current is generated in the receiver coil inductively by the primary coil in the base unit, the current is rectified and smoothed by the rectifier circuit and is used to power and activate the microcontroller and to charge the battery of the portable device;

As discussed in limitation 20(j), *Okada-Odendaal-Cho* discloses/suggests "wherein when a current is generated in the receiver coil inductively by the primary coil in the base unit, the current is rectified and smoothed by the **receiver rectifier circuit**." (§IX.A.1(j); Ex. 1002, ¶226.) For the same reasons discussed therein, the above *Okada-Odendaal-Cho-Meadows* combination discloses/suggests the similar features recited in limitation 30(i) ("the current is rectified and smoothed by the **rectifier circuit**"). (*Id.*)

Likewise, the analysis for limitation 20(j) demonstrates how the *Okada-Odendaal-Cho-Tetlow-Nguyen* combination discloses/suggests the "**current**

rectified and smoothed by the receiver rectifier circuit…**is used** by the voltage regulator **to power and activate the microcontroller and** used by the battery charging circuit **to charge the battery of the portable device**" (§IX.A.1(j).) While the asserted combination involves modifications based on references, not asserted in Ground 4 (*Tetlow-Nguyen*), the rationale, motivation, and expectation of success in implementing the proposed modification discussed therein are applicable to the *Okada-Odendaal-Cho-Meadows* combination here. Thus, a POSITA would have had similar rationale, skill, and expectation of success to modify the *Okada-Odendaal-Cho-Meadows* combined device/system here as that discussed for limitation 20(j). (*Id.*; Ex. 1002, ¶227; Ex. 1005, ¶¶0056-0058.) Thus, for the same reasons discussed for limitation 20(j) the *Okada-Odendaal-Cho-Meadows* combination discloses/suggests limitation 30(i). (Ex. 1002, ¶227.)

The rectified/smoothed current is used to power and activate circuits 46-47 (and may contain additional circuits; *see* §IX.A.1(g)) ("**the receiver communication and control circuit**" including a "**microcontroller**") as a DC signal "generated by a carrier wave provided by…circuit 33 can be **used as a driving power source for the clock extracting circuit 46 and the modulating circuit 47**." (Ex. 1005, ¶0058; *see also id.*, ¶¶0049-0051, 0056-0074, FIG. 3.) "When this DC voltage is applied to the power-on reset circuit 48 (power receiving control IC 50)

recognizes that a carrier wave is sent from…circuit 33." (*Id.*, ¶0057; Ex. 1002, ¶228.)

Based on the information provided by modulating circuit 47, cradle 4 starts the power/charging process, which involves switching circuit 15 of PTM10 applying a switching pulse signal to primary coil 19 via one of switches 21/22/23, which induces a voltage and thus current on coil 41. (Ex. 1005, ¶¶0057-0073, FIG. 3; *see also id.*, ¶¶0049-0051; §IX.A.1(a).) Moreover, power-on reset circuit 48, which receives the output signal (having been rectified by circuit 43) from the smoothing circuit 44, provides "drive instructions to the power receiving control IC 50" to power/charge PDA3 using voltage clamp circuit 49, regulator 51, and charging control circuit 52. (*Id.*, ¶0047; Ex. 1002, ¶229.)

j) wherein upon powering and activation of the microcontroller by the primary coil in the base unit, the receiver circuit is configured to:

k) communicate to the base unit a power parameter and a voltage or current value at an output of the receiver rectifier circuit induced by the primary coil; and

Okada-Odendaal-Cho-Meadows-Berghegger discloses/suggests this limitation. (Ex. 1002, ¶230.)

Consistent with that discussed for limitations 20(k)-(l), the combined teachings/suggestions of *Okada-Odendaal-Cho* in view of *Berghegger* discloses/suggests "wherein upon powering and activation of the **receiver circuit**

by the primary coil in the base unit, the receiver circuit is configured to: communicate to the base unit **information corresponding to a voltage or current value at the output of the receiver rectifier circuit induced by the primary coil**…and **a power requirement**." (§§IX.A.1(k)-(l); Ex. 1002, ¶231.)

As discussed, the disclosed "receiver circuit" includes the "**microcontroller**" (§§IX.A.1(e)-(g), IX.C.1(e)-(g).) Moreover, as discussed in limitation 20(l), *Okada* discloses circuit 47 (part of "**receiver circuit**") communicates information including PDA3's "power consumption information" ("**a power parameter**") to cradle 4/PTM10 ("**base unit**") to determine PDA3's power requirement. (§§IX.A.1(c), IX.A.1(l); Ex. 1005, ¶¶0057, 0063-0064, 0069-0073, FIG. 3.) Thus, *Okada* (included as modified) discloses "wherein upon powering and activation of the microcontroller by the primary coil in the base unit, the receiver circuit is configured to: communicate to the base unit **a power parameter**." (Ex. 1002, ¶232.)

Additionally, also as discussed in limitation 20(l), the modified *Okada* device/system in view of *Berghegger* discloses/suggests that such communicated information would have included the voltage at the output of the "receiver rectifier circuit" induced by primary coil 19 (§IX.A.1(l)), which is similar to the claimed communication including "**a voltage or current value at an output of the receiver rectifier circuit induced by the primary coil**" recited here.

While the asserted combination for limitations 20(k)-(l) involves a combination of references not asserted in Ground 4 (*Tetlow-Nguyen-Calhoon-Black*), the rationale, motivation, and expectation of success in implementing the proposed modification for the similar features recited in limitation 30(k) do not hinge on the teachings/suggestions from those other references. Indeed, the rationale, motivation, and expectation of success in implementing the proposed modification discussed therein are applicable to the *Okada-Odendaal-Cho-Meadows* combination here. Thus, a POSITA would have had similar rationale/skill/expectations to modify the *Okada-Odendaal-Cho-Meadows-Berghegger* combined device/system here as that discussed for limitations 20(k)-(l) (regarding the similarly claimed features here). (*Id.*; Ex. 1002, ¶¶233-234.)

l) periodically communicate to the base unit information corresponding to a presently induced output voltage or current of the receiver rectifier circuit to enable the base unit to regulate in a closed loop manner the output voltage or current of the receiver rectifier circuit during the charging of the battery of the portable device; and

The analysis for limitation 20(m) explains how the modified *Okada* system discloses/suggests "**periodically communicate to the base unit** additional **information corresponding to a presently induced output voltage or current of the receiver rectifier circuit to enable the base unit to regulate in a closed loop manner the output voltage or current of the receiver rectifier circuit during the**

charging of the portable device" like that also recited in limitation 30(l). (§IX.A.1(m); Ex. 1002, ¶235.) While that asserted combination involves modifications based on references not asserted in Ground 4 (*Tetlow-Nguyen-Calhoon-Black*), the rationale, motivation, and expectation of success in implementing the proposed modification discussed therein are applicable to the *Okada-Odendaal-Cho-Meadows-Berghegger* combination here. Indeed, the analysis for limitation 20(m) explains how the teachings of *Okada-Berghegger* would have motivated such modifications that result in the above claimed features. (§IX.A.1(m).) Thus, a POSITA would have had similar rationale, skill, and expectation of success to modify the *Okada-Odendaal-Cho-Meadows-Berghegger* combined device/system here as that discussed for limitation 20(m). (*Id.*; Ex. 1002, ¶235.)

m) wherein the communication and control unit is configured to control the disconnect switch to disconnect the flow of current from the output of the receiver unit to the battery during at least some of the communication with the base unit.

Okada-Odendaal-Cho-Meadows-Berghegger discloses/suggests this limitation for the same reasons discussed for claim 23 and limitation 30(h). (§§IX.C.1; IX.D.1(h); Ex. 1002, ¶236.)

X. DISCRETIONARY DENIAL IS NOT APPROPRIATE

Discretionary denial under Section 325(d) is not appropriate here given the prior art combinations/arguments raised during prosecution are not the same/substantially similar to the presented grounds. For instance, the Office did not consider *Okada* in light of the other asserted prior art herein. (Ex. 1004; Ex. 1001, Cover.) *Okada* discloses/suggests many of the claimed features, and thus is relevant to the patentability of the challenged claim(s), especially when considered in context of the asserted obviousness positions. (§IX.) The examiner also did not have the benefit of expert testimony to support such teachings/suggestions as presented here. (Ex. 1002.) Thus, the examiner erred in allowing the claims without considering the teachings/suggestions in the prior art relied on in this Petition (*see* §IX). (Ex. 1004, 729-737.) Had the examiner done so, the challenged claims would have likely not have issued.[7]

This is true despite the issued patent from *Calhoon* (Ex. 1041) (and other patent references by "Calhoon") was cited during prosecution. (Ex. 1001, Cover; Ex. 1004.) As with other submitted references, the examiner erred in a manner pertinent to the patentability of the challenged claims by failing to consider and apply

[7] Petitioner reserves the right to seek leave to respond to any §325(d) (and §314) arguments PO may raise to avoid institution.

the similar teachings by *Calhoon* alone or in combination with other prior art. Indeed, *Calhoon* at least discloses features recited in limitation 20(i), and thus should have been considered in combination with other pertinent references (like *Okada*). (§IX.A.)

Furthermore, an evaluation of the factors under *Apple Inc. v. Fintiv, Inc.*, IPR2020-00019, Paper 11 (Mar. 20, 2020) (precedential), favors institution.

The **first factor** (stay) is neutral, because Samsung has not yet moved for a stay. *See Hulu LLC v. SITO Mobile R&D IP, LLC et al.*, IPR2021-00298, Paper 11 at 10-11 (P.T.A.B. May 19, 2021).

The **second factor** (proximity) is neutral. "The PTAB will weigh this factor against exercising discretion to deny institution under *Fintiv* if the median time-to-trial is around the same time or after the projected statutory deadline for the PTAB's final written decision" (FWD). (Ex. 1051, 9.) The median time from filing to trial in the Eastern District of Texas is 19 months, meaning trial will be *no earlier* than May 2024 (Ex. 1052, 35), which is close to the court's scheduled jury selection for August 5, 2024 (Ex. 1053, 1.) With this petition filed in June 2023, a FWD may be expected by December 2024, not long after the trial date.

That the FWD may come after the trial date is not dispositive. The Board has granted institution in cases where the FWD issued months after the scheduled trial date. The Board has relied on various justifications, such as diligence in filing the

petition, a stipulation not to pursue the asserted grounds in litigation, minimal investment in litigation, and the merits of the invalidity challenge were strong. *Verizon Business Network Services, Inc. v. Huawei Techs. Co*., IPR2020-01141, Paper 12 (Jan. 14, 2021). The same factors are present in this case. For instance, Petitioner diligently filed this petition (challenging long, convoluted claims) in advance of the one-year bar date and within four months of PO's infringement contentions in the Texas Litigation. (Exs. 1018, 1022.) Fact discovery is not anticipated to close until March 18, 2024. (Ex. 1053, 3.) Expert discovery has not yet started. (*Id.*) And the *Markman* hearing has been scheduled for February 6, 2024, after the filing of this petition. (*Id.*)

The **third factor** (investment) also weighs against denial. The district court case is in the early stages. Fact discovery is in its infancy and the parties have not engaged in expert discovery. (*Id.*, 3.) The parties have not yet identified terms for construction. (*Id.*, 3-6.) Nor have there been any substantive orders in this case.

The **fourth factor** (overlap) also weighs against denial. Petitioner hereby stipulates that, if the IPR is instituted, Petitioner will not pursue the IPR grounds in the district court litigation. Thus, "[i]nstituting trial here serves overall system efficiency and integrity goals by not duplicating efforts and by resolving materially different patentability issues." *Apple, Inc. v. SEVEN Networks, LLC*, IPR2020-00156, Paper 10 at 19 (P.T.A.B. June 15, 2020); *see also Sand Revolution II, LLC v.*

Continental Intermodal Group-Trucking LLC, IPR2019-01393, Paper 24 at 12 (P.T.A.B. June 16, 2020).

While the **fifth factor** (parties) may weigh slightly in favor of denial, because the Petitioner and PO are the same parties as in district court, based on a "holistic view," the factors favor institution. *Samsung Elecs. Co. Ltd. v. Dynamics Inc.*, IPR2020-00505, Paper 11 at 15 (P.T.A.B. Aug. 12, 2020).

Further, the Board should not discretionarily deny institution, because this petition presents compelling merits. *See Commscope Tech. LLC v. Dali Wireless, Inc.*, IPR2022-01242, Paper 23 at 4-5 (P.T.A.B. Feb. 27, 2023) (precedential). As demonstrated above, the claimed features are a compilation of technologies/techniques known to be used in inductive power/charge systems. (§IX) Moreover, this Petition is the ***sole*** challenge to the challenged claims before the Board—a "crucial fact" favoring institution. *Google LLC v. Uniloc 2017 LLC*, IPR2020-00115, Paper 10 at 6 (May 12, 2020).

XI. CONCLUSION

Accordingly, Petitioner requests institution of IPR for the challenged claims based on the specified grounds.

Respectfully submitted,

Dated: June 30, 2023

By: /Joseph E. Palys/
Joseph E. Palys (Reg. No. 46,508)
Counsel for Petitioner

CERTIFICATE OF COMPLIANCE

Pursuant to 37 C.F.R. § 42.24(d), the undersigned certifies that the foregoing Petition for *Inter Partes* Review of U.S. Patent No. 11,316,371 contains, as measured by the word-processing system used to prepare this paper, 13,869 words. This word count does not include the items excluded by 37 C.F.R. § 42.24 as not counting towards the word limit.

Respectfully submitted,

Dated: June 30, 2023

By: /Joseph E. Palys/
Joseph E. Palys (Reg. No. 46,508)
Counsel for Petitioner

CERTIFICATE OF SERVICE

I hereby certify that on June 30, 2023, I caused a true and correct copy of the foregoing Petition for *Inter Partes* Review of U.S. Patent No. 11,316,371 and supporting exhibits to be served via express mail on the Patent Owner at the following correspondence address of record as listed on Patent Center:

115007 – NK Patent Law
4101 Lake Boone Trail
Suite 218
Raleigh, NC 27607

By: /Joseph E. Palys/
Joseph E. Palys (Reg. No. 46,508)