US006606247B2

(12) **United States Patent**
Credelle et al.

(10) **Patent No.: US 6,606,247 B2**
(45) **Date of Patent: Aug. 12, 2003**

(54) **MULTI-FEATURE-SIZE ELECTRONIC STRUCTURES**

(75) Inventors: **Thomas Lloyd Credelle**, Morgan Hill, CA (US); **Glenn Gengel**, Hollister, CA (US); **Roger Green Stewart**, Morgan Hill, CA (US); **William Hill Joseph**, Los Gatos, CA (US)

(73) Assignee: **Alien Technology Corporation**, Morgan Hill, CA (US)

(*) Notice: Subject to any disclaimer, the term of this patent is extended or adjusted under 35 U.S.C. 154(b) by 0 days.

(21) Appl. No.: **09/872,985**

(22) Filed: **May 31, 2001**

(65) **Prior Publication Data**

US 2002/0181208 A1 Dec. 5, 2002

(51) **Int. Cl.**[7] **H05K 1/11**; H05K 1/14; H05K 7/02

(52) **U.S. Cl.** **361/737**; 361/760; 361/761

(58) **Field of Search** 361/737, 760, 361/761, 764; 438/19, 455; 257/786

(56) **References Cited**

U.S. PATENT DOCUMENTS

4,857,893	A	*	8/1989	Carroll	340/572
5,545,291	A	*	8/1996	Smith et al.	156/655
5,904,545	A	*	5/1999	Smith et al.	438/455
5,914,862	A	*	6/1999	Ferguson et al.	361/737
6,019,284	A		2/2000	Freeman et al.	
6,133,835	A	*	10/2000	De Leeuw et al.	340/572.5
6,181,287	B1	*	1/2001	Beigel	343/741
6,281,038	B1	*	8/2001	Jacobsen et al.	438/106
6,291,896	B1	*	9/2001	Smith	257/786
6,320,753	B1	*	11/2001	Launay	361/760
6,366,468	B1	*	4/2002	Pan	361/761
6,384,425	B1	*	5/2002	Huber et al.	257/48

FOREIGN PATENT DOCUMENTS

DE	199 29 610 C1	10/2000
EP	0 992 939 A1	4/2000
EP	1 014 302 A1	6/2000
WO	WO 99/41701 A2	8/1999
WO	WO 01/33621 A2	5/2001

OTHER PUBLICATIONS

PCT International Search Report for PCT Int'l Appln No. US02/16474, mailed Oct. 30, 2002 (7 pages).

* cited by examiner

Primary Examiner—David Martin
Assistant Examiner—Dameon E. Levi
(74) *Attorney, Agent, or Firm* Blakely, Sokoloff, Taylor & Zafman LLP

(57) **ABSTRACT**

Methods and apparatuses for an electronic assembly. The electronic assembly has a first object created and separated from a host substrate. The first object has a first electrical circuitry therein. A carrier substrate is coupled to the first object wherein the first object is being recessed below a surface of the carrier substrate. The carrier substrate further includes a first carrier connection pad and a second carrier connection pad that interconnect with the first object using metal connectors. A receiving substrate, which is substantially planar, including a second electrical circuitry, a first receiving connection pad, and a second receiving connection pad that interconnect with the second electrical circuitry using the metal connectors. The carrier substrate is coupled to the receiving substrate using the connection pads mentioned.

15 Claims, 6 Drawing Sheets

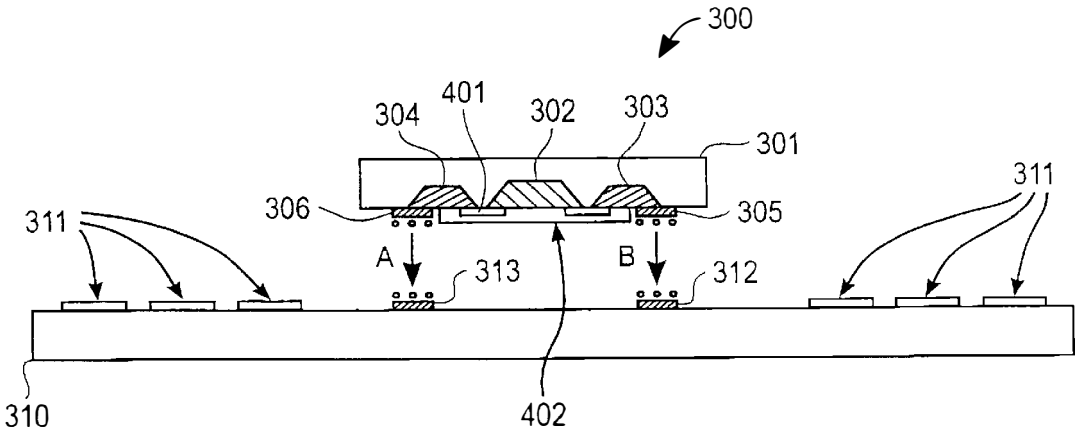

SAMSUNG EXHIBIT 1030

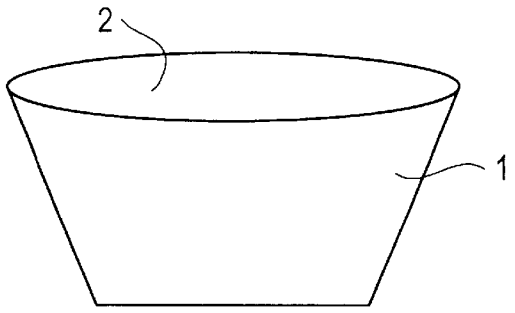

FIG. 1

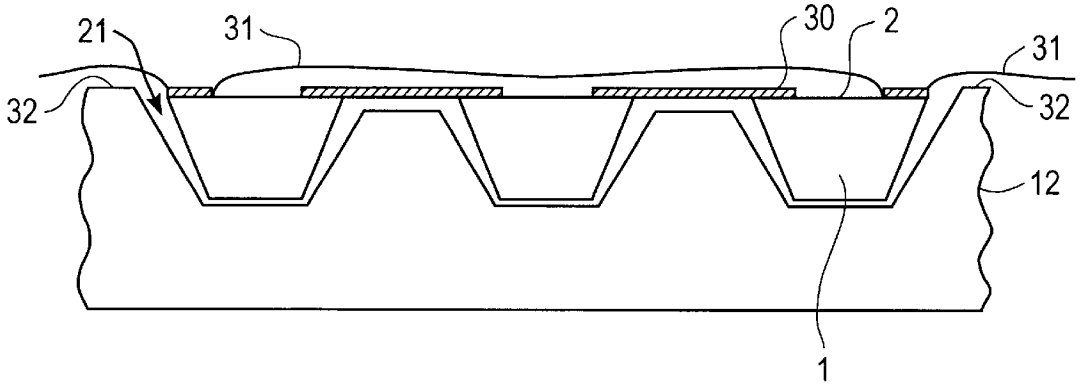

FIG. 2

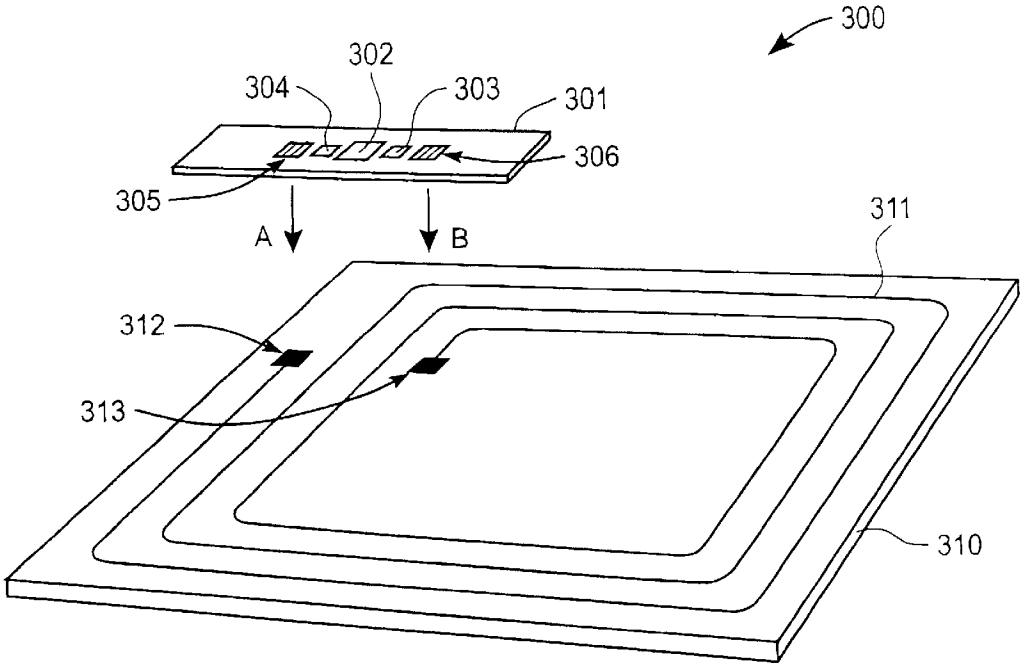
300
302
304
303
301
306
305
A
B
311
312
313
310

FIG. 3

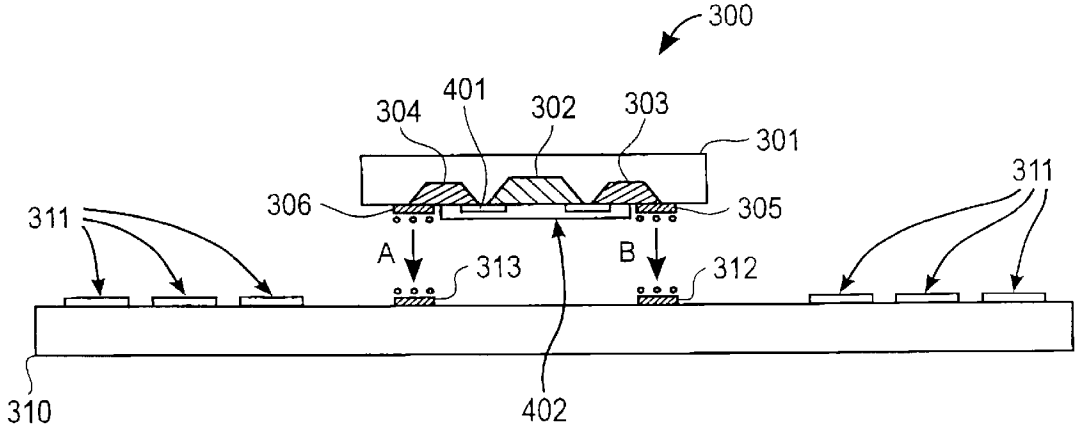
300
401
304
302
303
301
311
306
305
311
A
313
B
312
310
402

FIG. 4A

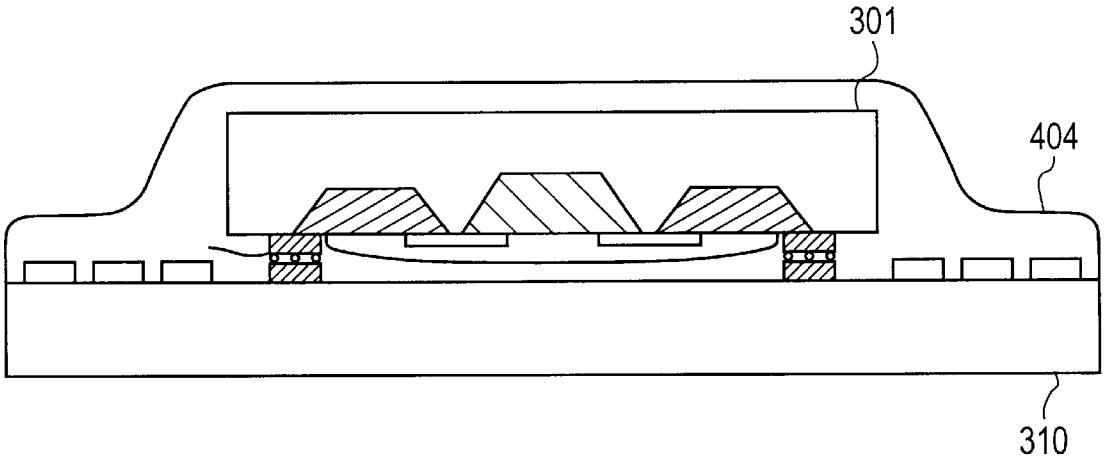

FIG. 4B

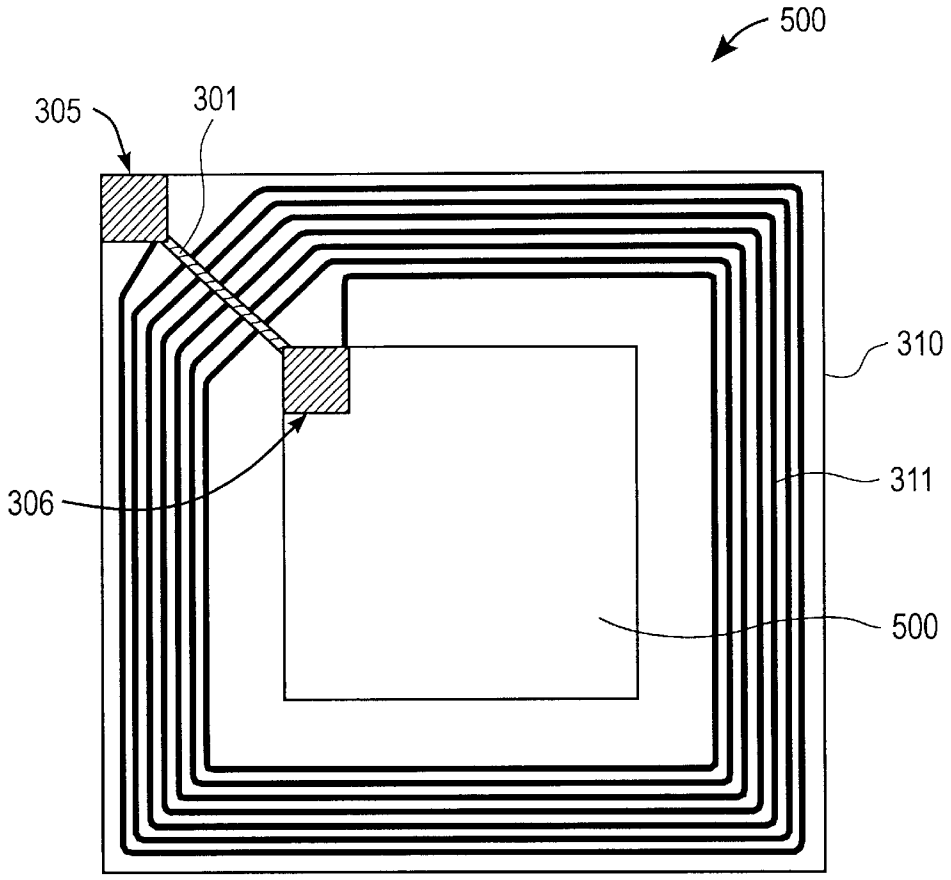

FIG. 5

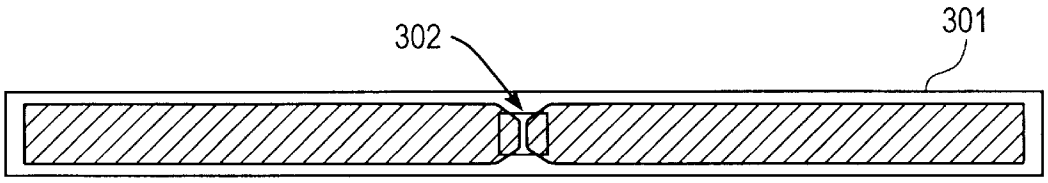

FIG. 6

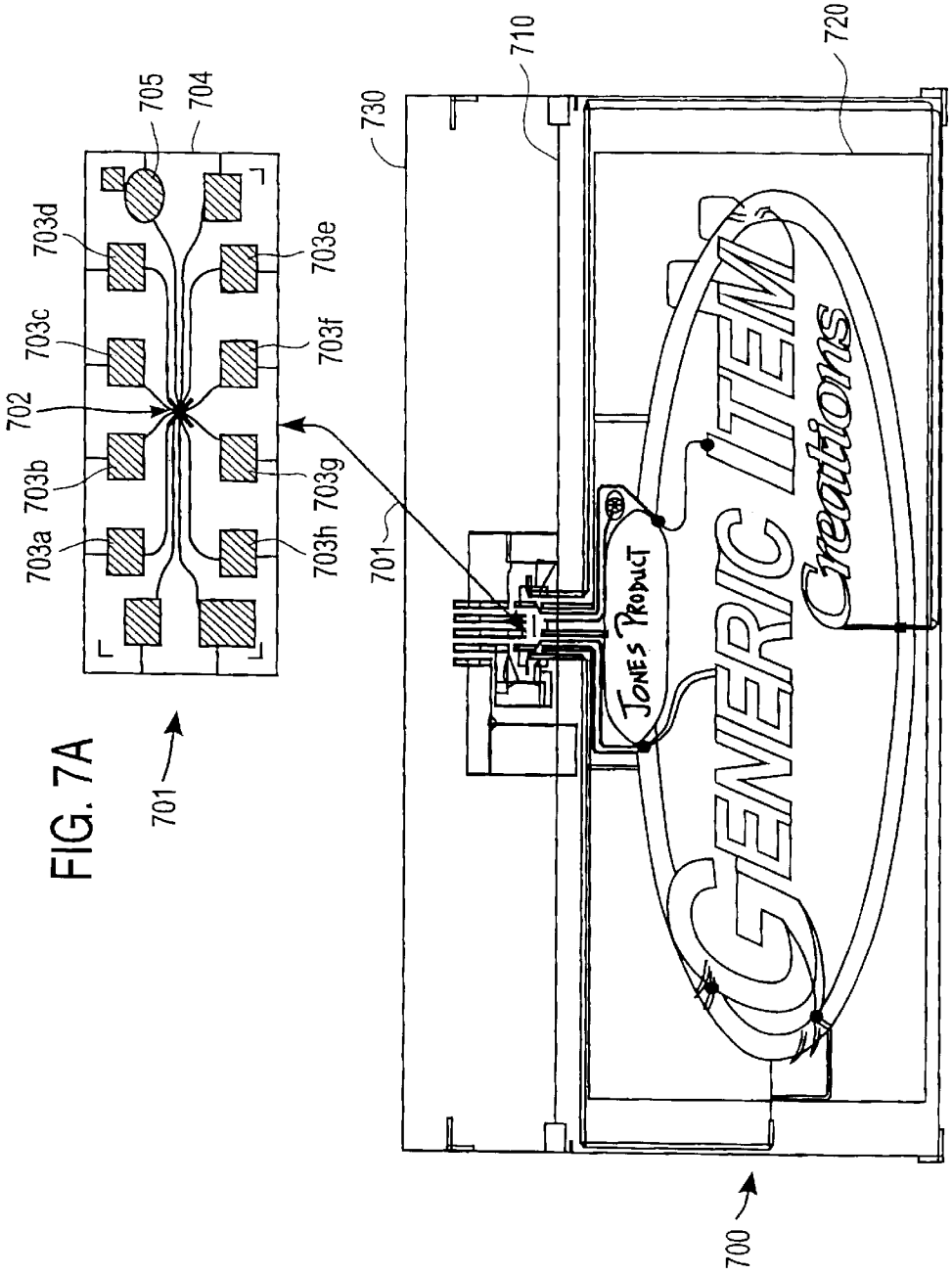
705
704
703d
703e
703c
703f
702
703b
703g
703a
703h
701
730
710
720
GENERIC ITEM
Creations
JONES PRODUCT
700

FIG. 7A

FIG. 7B

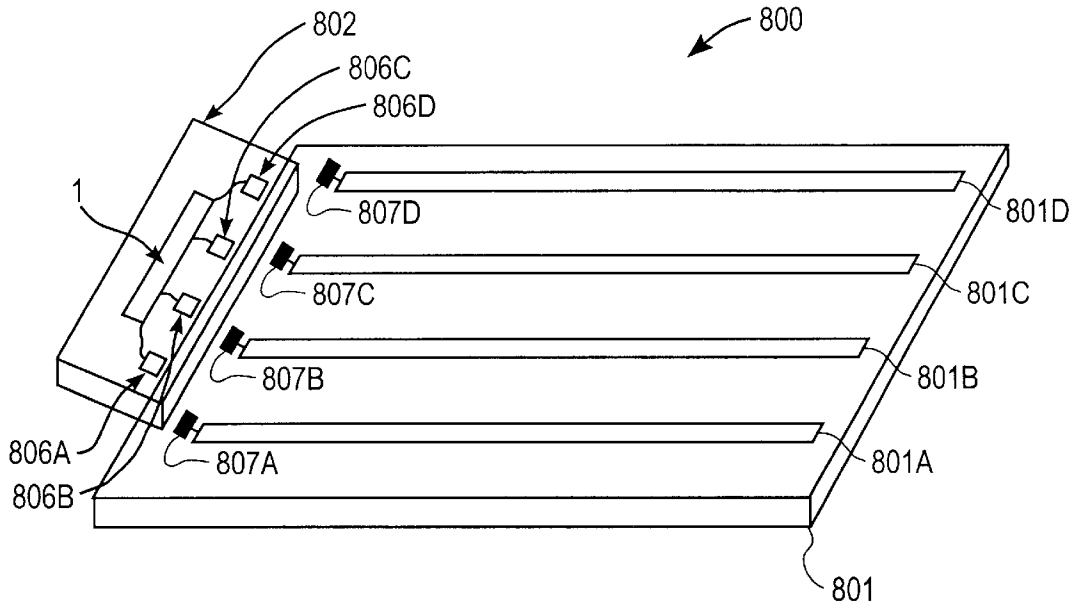
800
802
806C
806D
1
807D
801D
807C
801C
807B
801B
806A
807A
801A
806B
801

FIG. 8A

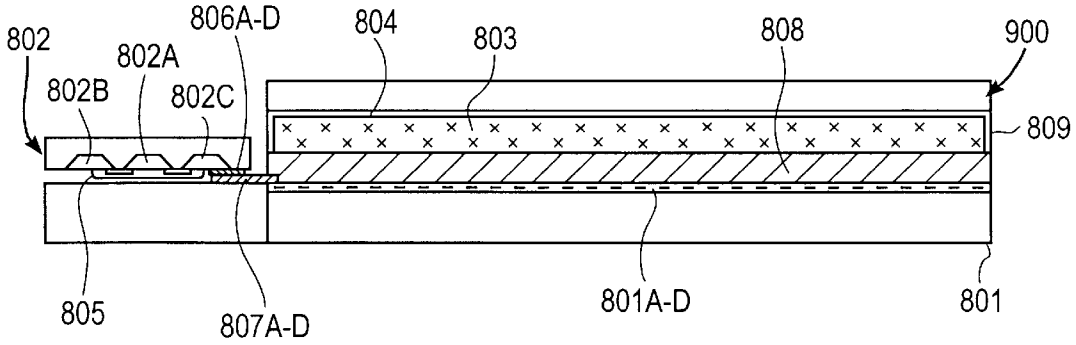
802
806A-D
804
803
808
900
802A
802B
802C
809
805
807A-D
801A-D
801

FIG. 8B

MULTI-FEATURE-SIZE ELECTRONIC STRUCTURES

FIELD OF THE INVENTION

The present invention relates generally to the field of fabricating electronic devices with small functional elements depositing in various substrates and apparatuses comprising these electronic devices.

BACKGROUND OF THE INVENTION

There are many examples of functional elements or components which can provide, produce, or detect electromagnetic signals or other characteristics. An example of using the functional components is using them as an array of a display drivers in a display where many pixels or sub-pixels are formed with an array of electronic elements. For example, an active matrix liquid crystal display includes an array of many pixels or sub-pixels which are fabricated using amorphous silicon or polysilicon circuit elements. Additionally, a billboard display or an signage display such as store displays and airport signs are also among the many electronic devices employing these functional components.

Functional components have also been used to make other electronic devices. One example of such use is that of a radio frequency (RF) identification tag (RF ID tag) which contains a chip or several chips that are formed with a plurality of electronic elements. Information is recorded into these chips, which is then transferred to a base station. Typically, this is accomplished as the RF ID tag, in response to a coded RF signal received from the base station, functions to cause the tag to reflect the incident RF carrier back to the base station thereby transferring the information.

Demand for functional components has expanded dramatically. Clearly, the functional components have been applied to make many electronic devices, for instance, the making of microprocessors, memories, power transistors, super capacitors, displays, x-ray detector panels, solar cell arrays, memory arrays, long wavelength detector array, phased arrays of antennas, or the like. The growth for the use of functional components, however, has been inhibited by the high cost of assembling the functional components into other substrates.

For instance, functional components such as semiconductor chips having RF circuit, logic and memory have been incorporated into an RF ID tag. The tag also has an antenna, and a collection of other necessary components such as capacitors or battery, all mounted on a substrate and sealed with another layer of material. Often the assembling of these components requires complex and multiple processes thereby causing the price of the end product to be expensive. Further, the manufacturing of these RF ID tag is costly because of inefficient and wasteful use of the technologies and the materials used to make these products under the current method.

Depositing semiconductor chips and other components onto substrates having the antenna is complex and tedious. The antenna material can be a thin film metal which can be deposited on substrates. Alternatively, the antenna material can also be adhered to the substrates using adhesive. These substrate are large compared to these semiconductor chip. The semiconductor chips to be interconnected to the antenna thus must be made large enough to allow for the interconnection. Because the semiconductor chips need to be large, material costs are thus high. Further, if there is a defective chip, the whole RF ID tag would be defective and would not

be discovered until the whole assembly is complete. Then, the whole RF ID tag is disposed along with other good components. This is intrinsically wasteful and inefficient.

The functional components may also be incorporated into substrates to make displays such as flat panel displays, liquid crystal displays (LCDs), active matrix LCDs, and passive matrix LCDs. Making LCDs has become increasingly difficult because it is challenging to produce LCDs with high yields. Furthermore, the packaging of driver circuits has become increasingly difficult as the resolution of the LCD increases. The packaged driver elements are also relatively large and occupy valuable space in a product, which results in larger and heavier products.

Furthermore, large displays such as those for signage purposes are expensive to make. Large displays are often made out of material with large-feature-size patterns that must be connected to integrated circuits (ICs) with small feature sizes. the This results in expensive packages that are bulky and expensive.

In general, these functional components include semiconductors that are manufactured on silicon wafers and then are packaged in thick chip carriers. These chip carriers, such as leaded chip packages, Tape Automated Bonded (TAB) carrier or flip chip carriers are bulky and expensive. Alternatively, integrated circuits incorporating into functional micro blocks can be used. These blocks and their functional components have been invented and disclosed in a copending U.S. patent application Ser. No. 09/251,220 which was filed Feb. 16, 1999 by the inventor John Stephen Smith and which is entitled "Functionally Symmetric Integrated Circuit Die." This application has been issued as U.S. Pat. No. 6,291,896 on Sep. 18, 2001. This patent is hereby incorporated herein by reference.

SUMMARY OF THE INVENTION

The present invention provides methods and apparatuses for an electronic assembly. According to one embodiment, the electronic assembly has a first object created and separated from a host substrate. The functional object has a first electrical circuitry therein. A carrier substrate is coupled to the first object wherein the first object is being recessed below a surface of the carrier substrate. The carrier substrate further includes a first carrier connection pad and a second carrier connection pad that interconnect with the first object using metal connectors. A receiving substrate, which is substantially planar, including a second electrical circuitry, a first receiving connection pad, and a second receiving connection pad that interconnect with the second electrical circuitry using the metal connectors. The carrier substrate is coupled to the receiving substrate. This coupling is achieved through couplings of the first receiving connection pad to the first carrier connection pad and the second receiving connection pad to the second carrier connection pad. An electrical connection between the first electrical circuitry and the second electrical circuitry is established.

BRIEF DESCRIPTION OF THE DRAWINGS

FIG. **1** illustrates an example of a functional component block.

FIG. **2** illustrates an exemplary embodiment of a carrier substrate having the functional components blocks inserted therein.

FIG. **3** illustrates a planar view of an exemplary embodiment of an RF ID tag according to the present invention.

FIG. **4A** illustrates a cross-sectional view of an exemplary embodiment of an RF ID tag according to the present invention.

FIG. 4B illustrates a cross-sectional view of an exemplary embodiment of an FR ID tag wherein the flexible strap has an additional cover.

FIGS. 5–6 illustrate of an exemplary embodiment of an RF ID tag according to the present invention.

FIGS. 7A–B illustrate an exemplary embodiment of a signage display having the IC included in the flexible strap.

FIGS. 8A–B illustrate an exemplary display of the present invention.

DETAILED DESCRIPTION OF THE INVENTION

FIG. **1** illustrates an exemplary embodiment of an object that is functional component block **1**. Block **1** has a top surface **2** upon which a circuit element is situated (not shown). The circuit element on the top surface **2** may be an ordinary integrated circuit (IC) for any particular function. For example, the IC may be designed to drive a pixel of a display. The IC may also be designed to receive power from another circuit for the operation of a passive RF ID tag. Alternatively, the IC may be designed to receive power from an energy source (e.g. battery) for the operation of an active RF ID tag. In one embodiment, block **1** has a trapezoidal cross-section where the top of the block is wider than the bottom of the block **1**. Block **1** may be created from a host substrate and separated from this substrate. This method of making block **1** can be found in the method described in copending U.S. patent application Ser. No. 09/251,220 now U.S. Pat. No. 6,291,896 referenced above. This patent is hereby incorporated by reference.

FIG. **2** illustrates an exemplary embodiment in which block **1** is deposited in a recessed region of a carrier substrate **12**. Once deposited, the block **1** is recessed below a surface **32** of the carrier substrate **12**. The surface **32** of the carrier substrate **12** is the native surface of the substrate before any deposition of any other materials on top of the surface **32**. Carrier substrate **12** may be a flexible substrate made out of plastic, fabric, metal, or some other suitable materials. In a preferred embodiment, carrier substrate **12** is flexible. FIG. **2** shows a planar view of a web material of carrier substrate **12** having recessed regions or holes **21** therein. These recessed regions or holes **21** may be created by a variety of methods. For example, the regions or holes **21** may be created by a web wheel, roller, or template, that have protruding structures as described in U.S. patent application Ser. No. 09/270,165, entitled "Apparatuses and Methods for Forming Assemblies" (Docket No. 003424.P016) by Jeffrey Jay Jacobsen. This patent application is hereby incorporated by reference. Another method involves using a template having blocks wherein the blocks are pressed into web material making recessed regions or holes **21** into the web material of carrier substrate **12**. (See U.S. patent application Ser. No. 09/270,157, entitled "Methods for Transferring Elements From a Template to a Substrate" (Docket No. 003424.P009) describing the donor transfer method).

The blocks **1** may be deposited into the recessed regions or holes **21** of a carrier substrate **12** by a method described in U.S. Pat. No. 5,545,291. The block **1** is then being recessed within the carrier substrate **12** and below the surface **32** of the carrier substrate **12**. The U.S. Pat. No. 5,545,291 explained how to assemble microstructures onto a substrate, and it is thus, incorporated herein by reference. This process may be referred to as FSA (fluidic self assembly) and may be performed with a web material such as the web material for carrier substrate **12**. In one embodiment, a web material is advanced through a web process apparatus. The FSA process deposits a plurality of blocks onto the web material wherein the blocks fall into recessed regions found in the web material.

FIG. **2** also shows a planar view of the web material of carrier substrate **12** wherein the blocks **1** are seated in the recessed regions or holes **21**. In one embodiment, electrical interconnect **30** is deposited onto the carrier substrate **12** interconnecting the top surface **2** of each block **1** to each other. Here, the web material of carrier substrate **12** is advanced to a further point in the FSA process wherein an interconnect layer is deposited thereon. The interconnect **30** may be comprised of conductive polymers, metals (e.g., aluminum, copper, silver, gold, etc.), metal particles, conductive organic compounds, or conductive oxides.

An insulation layer **31**, which is a dielectric material, may be coated over the area that have the interconnect **30** to prevent short circuit with other functional components that the carrier substrate **12** may come into contact with. The insulation layer **31** insulates the circuit elements within the block **1** as well as the interconnect **30** that connects one block **1** to another block **1**. The insulation layer **31** enables the carrier substrate **12** to cross over at least one electrical interconnection (e.g., another interconnect **30** on another substrate, or an antenna loop) without shorting out the whole device.

The interconnect **30** may be flexible interconnect layers (not shown). These interconnect layers may be made with the techniques used to create Tape Automated Bonding (TAB) tape interconnections well practiced in the semiconductor industry. The flexible interconnect layers may be created from one of numerous types of materials which are appropriate for a web tape material which is designed to hold electrically conductive interconnect layers. These materials include polyimide tapes on which are deposited conductive traces of metal. The metal may be deposited directly on the tape (e.g. by a blanket deposition) and then patterned by etching, or a photoresist layer may be applied and patterned, leaving grooves into which metal may be deposited. The interconnect may be patterned to create an intricate wiring pattern such as row and/or column interconnects for an active matrix display backplane. The actual patterns will depend on the particular application for these functional components. The flexible interconnect layer, once created, may be applied to the carrier substrate **12**.

It will be appreciated that the flexible interconnect layer may be fabricated in a web process and then aligned with the web material of carrier substrate **12** having blocks **1** either in a web process or outside of a web process. It will be further appreciated that the carrier substrate may be flexible, planar, or rigid and made in a web process or batch process. It will also be appreciated that an alignment operation, using conventional techniques, may be necessary to properly align the interconnect layer **30** relative to the carrier substrate **12** with blocks when the interconnect layer is coupled to the carrier substrate **12**.

In one embodiment, the process of interconnecting the functional components (e.g., blocks **1**) embedded in a substrate (e.g., carrier substrate **12**) uses only a single layer of metalization for interconnect layer **30**. This will reduce the possibility of interlayer shorts on the electronic devices.

FIG. **3** illustrates an exemplary embodiment of an RF ID tag **300**. In this embodiment, a flexible carrier strap **301** comprising functional components is coupled to a receiving substrate **310**, also comprising functional components. The flexible strap **301** may be the carrier substrate **12** discussed in FIG. **2** above. The flexible strap **301** comprises at least

one functional component **302**. The functional component **302** is much like the functional component block **1** of FIG. **1**. The flexible strap **301** also may comprise other necessary components **303** and **304** such as a resistor, a capacitor or an inductor for completing the necessary circuitry. Components **303** and **304** may also be manufactured as blocks **1** above. Components **302**, **303** and **304** may be interconnected, typically, through metal connectors such as metal wires, thin evaporated layer of conductor material (e.g., Aluminum) or ink containing metals (not shown). The interconnection of all the components can be achieved with the interconnects **30** discussed above.

Flexible strap **301** further includes at least two carrier connection pads **305** and **306**. The carrier connection pads **305** and **306** are used to couple the flexible strap **301** to the receiving substrate **310** (see below). The carrier connection pads **305** and **306** are made out of conductive materials. A conductive adhesive can be used to couple the flexible strap **301** to the receiving substrate **310** thereby establishing electrical interconnections for all of the functional components from the flexible strap **301** to those from the receiving substrate **310**. In another embodiment, the methods called cold swaging or ultrasonic welding which, are well practiced in the field, can be used to couple the flexible strap **301** to the receiving substrate **310**.

In one embodiment, the receiving substrate **310** includes an antenna **311** as a functional component. The receiving substrate **310** may be flexible and made out of some low cost plastic or some other suitable material for the particular application. The receiving substrate **310** is preferably planar. The antenna **311** may be loops of wire attached to the receiving substrate **310**. The antenna **311** may also be made out of screen printed conductors such as silver, carbon, or metal that is coupled to the receiving substrate **310** that has been etched with patterns to receive the antenna material. The antenna **311** may also be made out of laminated drawn foil that has an adhesive containing layer which enables the antenna to be coupled to the receiving substrate **310** in any particular pattern, for instance, loops. At each end of the loops of the antenna **311**, there is a receiving connection pad, in this embodiment, receiving connection pads **312** and **313**. The receiving connection pads **312** and **313** are also made out of conductive materials to establish the conductive connection for all of the functional components from the receiving substrate **310** to those from the flexible strap **301**.

In order to complete the circuitry of the antenna **311**, the flexible strap **301** is coupled to the receiving substrate **310**. The coupling of the flexible strap **301** and the receiving substrate **310** is achieved through the attachment of the carrier connection pads **305** and **306** to the receiving connection pads **312** and **313** as shown by arrows A and B. The flexible strap **301** can cross over at least one conducting material. Here, the flexible strap **301** crosses the loops of the antenna (FIG. **5**). In one example, a conductive adhesive is used to couple all of the carrier connection pads to the receiving connection pads.

It will be appreciated that the flexible substrate **310** may have other functional components or other circuitries, instead of or in addition to the antenna **311**. For instance, another functional component like blocks **1** which may have circuitries designed to drive display pixel electrodes, to draw energy source, to sense external inputs, or to transfer data. In one embodiment, the total carrier connection pads (such as **305** and **306**) is only two even if there are multiple functional components in the flexible strap **301**.

FIG. **4**A illustrates the cross-sectional view of the embodiment described in FIG. **3**. This figure, however, shows in details that there is preferably an insulation layer **402** between the metal wires **401** that interconnect all of the components on the flexible strap **301** and the antenna **311** on the receiving substrate **310**. The insulation layer **402** is a dielectric material that serves to electrically isolate the metal wires on flexible substrate **301** and the antenna **311** on the receiving substrate **310**. Contacting the metal wires **401** with the antenna or the electrical circuitry will short-circuit the antenna or other the electrical circuitry.

In addition, the flexible strap **301** can be covered with a protected layer **404** for extra protection (FIG. **4**B). The protected layer **404** can be made out of any flexible material such as polymer or plastic. The protected layer **404** can also be transparent or opaque.

The method of fabricating the electronic devices described in FIGS. **3**, **4**A and **4**B can be applied to make a wide range of other electronic devices. The small flexible strap **301** with blocks **1** can be made to be readily available components that can be used for any particular purpose. For example, the flexible strap **301** can be used in the fabrication of display components, micro-electro-mechanical structural elements, or generally, an assembly of sensors or actuators or an assembly of circuit elements. Thus, devices such as flexible antennas, other sensors, detectors, or an array of circuit elements may be fabricated using one of the embodiments of the inventions.

Another advantage of the present invention is manufacturing of electronic devices that are having radically different feature sizes to interface or integrate with one another. In order to lower the cost of making electronic devices, blocks **1** are made with very small silicon or other materials suitable for carrying a circuit. Making blocks **1** small, (in the order of tens of micrometers in dimension) optimizes the expensive technology and the expensive media materials necessary (e.g., silicon wafer) to fabricate these blocks **1**. (See U.S. patent application Ser. No. 09/251,220 reference above). Making the blocks **1** small also enables the functional components to be small, thus, saving material cost as well as the processing cost. Furthermore, small blocks **1** enable small packaging of the silicon material which means more of blocks **1** can be produced at a higher rate with less materials.

However, integrating these functional micro blocks **1** into coarse materials such as display components, antenna card, or other large electronic components, present problems of interfacing or integrating materials of radically different feature sizes. For instance, the substrate of a display is typically much bigger than that of the blocks **1**; or the substrate of an antenna in an RF ID tag is likewise much bigger than that of the blocks **1**. Integrating radically different feature size materials together is inherently wasteful of areal space, for instance, leaving die area typically useful for essential components unused. In yet another example, electronic components of high densities such as transistors, when integrating with other large components, also need to have high densities to minimize waste. Thus, when making large electronic devices, the functional components are often large. This is wasteful to expensive material.

In the present inventions, flexible strap **301** may be viewed as an interposer which is an intermediate that bridge functional components of radically different densities together without the waste of materials. With the present inventions, the functional component that is the most expensive to fabricate can be made like the blocks **1** which is very small in dimension. The blocks **1** are then deposited into the flexible strap **301**, and then integrated with another func-

tional components that can be made out of a cheaper material or technology. More importantly, we can optimize the most expensive technology, i.e., the interconnecting technology, where it is needed. Using the embodiments according to the present invention, the expensive interconnecting technology, (e.g., FSA) is only used in making the flexible strip **301** while the making of the antenna, for example, can be achieved using a lower cost interconnecting technology. The expensive processes and materials are thus optimized.

The following example illustrates the size differences for an electrical device manufactured with the methods described above. The functional block **14** has a total size of 350 μm×500 μm (width×length) with a design feature size or design rule of 0.5 μm. The flexible strap **301** as a total size of 1.5 mm×10 mm with a design feature size of 20 μm. And, the receiving substrate **311** has the total size of 20 mm×50 mm with the design feature size of 250 μm. The design feature size or design rule can be thought of as a density for each of the components. The embodiments discussed therefore, enable the integrating and the interfacing of radically different density electronic devices to each other without wastes of expensive material and technology.

FIG. **5** illustrates an example of an RF ID tag **500** made using the method described in FIGS. **3**, **4**A and **4**B. Current art includes RF ID tags, which are small, nevertheless, contains very limited information due to the size constraint. Also, current RF ID tags are inflexible because the IC packagings are rigid and large. Storing more information also means that the RF ID tag would have to have more functional components and as a result, require more interconnections among different functional components. Placing these many functional components on the same substrate is overly expensive and complex, not to mention increasing the chance for short circuit in the system. For a flexible and thin RF ID tag, it is desirable to have the silicon integrated circuitry (IC) be small and thin. The blocks **1** described above may be used to contain the IC which can then be incorporated into the RF ID tag **500**. The RF ID tag **500** can be placed on products such as store merchandise as a way to label, identify, and track these products.

FIGS. **5** illustrates an example of depositing the all of the functional components except for the antenna **311** onto the flexible strap **301** and using the flexible strap **301** to bridge the antenna **311**. FIG. **6** is an enlarged view of the flexible strap that is used in the RF ID tag **500**.

In a conventional method, the antenna **311** would be deposited on receiving substrate **310**, typically a thick material. The functional components (not shown) would then be deposited in area **500**. Some conductive material would interconnect the functional components to each other. Then, a strap would bridge one side of the loops of the antenna **311** to the other side of the loops of. The strap has no function other than to complete the circuit for the antenna **311**. Under the current art if there is a defective functional components, that will not be detected until the whole fabrication of the RF ID tag **500** is completed. When that happens, materials are wasted since the whole RF ID tag is discarded. Furthermore, the alignment of these functional components makes the assembly process complicated and expensive.

In the present embodiment, the functional components would be placed in the flexible strap **301** and not area **500**. The flexible strap **301** would serve to bridge one side of the antenna **311** to the other side of the antenna **311**. Furthermore, the flexible strap **301** would carry the functional components that have particular functions, for instance, to receive power for the operation of the RF ID tag **500** or to send information to a base station of the RF ID tag base **500**.

By using the embodiments of FIGS. **3**–**6** a low cost technology such as screen-printing can be used to produce large area elements such as the antenna **311**. In one example, the antenna **311** may be printed in massive quantity on some low cost substrate and using a process that requires less rigorous alignment. The functional component such as the blocks **1** to drive the antenna **311** or to send the data from the RF ID tag **500**, may be as described in U.S. patent application Ser. No. 09/251,220 mentioned above. The blocks **1** are then integrated into the carrier substrate **12** with a high precision and more expensive technology such as the fluidic self-assembly. Thus, the small flexible strap **301** can be used to carry all of the essential components that are expensive to manufacture. The expensive interconnecting technology is optimized in that all of the essential components are packaged into the flexible strip **301** which is then coupled to the antenna that would be made out of a lower cost interconnecting technology.

Another example using the flexible strap **301** to integrate with other functional components to make electrical device involves the making of a signage display. FIGS. **7**A–**7**B illustrate a general view of a signage display utilizing the flexible strap **301** of the present invention. The display system **700** includes a flexible strap **701**, which is similar to the flexible strap **301** described above, a top electrode layer **710**, a viewable area **720**, and a backplane layer **730**.

In a conventional technology, a general display system have its electronic circuit elements, such as row or column driver circuits, attached to flexible circuits such as TAB tape. The assembly is then attached to the LCD on one side and a PC board on the other. An additional set of circuits is usually added to the second glass or plastic layer. In a passive matrix LCD, the driver circuits are attached to each glass or plastic substrate; in an active matrix LCD, the driver circuits are attached to two or four edges on only one of the glass or plastic substrates. These drive circuits provide the electrical control signals and data required to form an image on the LCD. While an LCD is used for the example, the same principles apply to other display media such as plasma, electroluminescence, electrophoretic, electrochromic, and the like.

Unlike the conventional method, in one embodiment of the present invention, the flexible strap **701** includes at least one integrated circuit which is embedded in a functional block **702**. The functional block **702** is manufactured as one of the blocks **1** discussed above. The functional block **702** may be manufactured according to the method disclosed in the U.S. patent application Ser. No. 09/671,659, entitled "Display Devices and Integrated Circuits" which was filed on Sep. 27, 2000, by inventors Roger Green Stewart, et. al., (Docket No. 03424.P028). This patent application is incorporated by reference herein.

In this embodiment, the functional block **702** is interconnected to eight output pads, **703***a*, **703***b*, **703***c*, **703***d*, **703***e*, **703***f*, **703***g*, and **703***h*. Each of these output pads is responsible for driving a particular segment of the display system. And, each of the segment displays a particular image of the signage display. The functional block **702** may also include an output pad **705** for a ground signal, or other necessary function for an integrated circuit.

Each of these output pads **703***a*, **703***b*, **703***c*, **703***d*, **703***e*, **703***f*, **703***g*, and **703***h* functions like those carrier connection pads **305** and **306**. In essence, these pads establish electrical

connections between the integrated circuit included in the functional component **702** and the functional components on the display. In one example, the output pad **703***g* may be used to establish the electrical connection with the portion of the top electrode layer **710** that is responsible for controlling the "Jones Product" segment of the display system **700**. Similarly, the output pad **703***e* may be used to establish the electrical connection with the portion of the top electrode layer **710** that is responsible for controlling the "Creations" segment of the display system **700**. In other words, the output pads **703***a*, **703***b*, **703***c*, **703***d*, **703***e*, **703***f*, **703***g*, and **703***h* all establishes electrical connections with the top electrode layer **710** that in turn drives the segments of the display system **700**.

In a preferred embodiment, the flexible strap **701** is coupled to the backplane layer **730** of the display system **700**. To affix the flexible strap **701** to the display system **700**, a thin layer of nonconductive adhesive may be coated over the carrier substrate **704**. In one example, the adhesive would be coated over the all of the area that do not have the output pads **703***a*, **703***b*, **703***c*, **703***d*, **703***e*, **703***f*, **703***g*, and **703***h*. Thus, the flexible strap **701** may be affixed to a surface such as the backplane layer **730** while the electrical function of the output pads **703***a*, **703***b*, **703***c*, **703***d*, **703***e*, **703***f*, **703***g*, and **703***h* would not be blocked by the adhesive layer. These outputs pads therefore, would be able to establish the necessary electrical connections with the top electrode layer **710**.

In another embodiment, the output pads **703***a*, **703***b*, **703***c*, **703***d*, **703***e*, **703***f*, **703***g*, and **703***h* are all made out of conductive adhesive such that when affixed to the top electrode layer **701**, these pads can establish both the mechanical as well as the electrical contact to the electrode layer **701**.

It will be appreciated that the number of the output pads depends on the particular applications or the displays. The number of the output pads may be more or less than eight output pads for each functional component block. Further, larger signage display can also be made using the examples discussed above. For instance, when the signage display requires more segments or portions for larger images, more functional blocks **1** can be incorporated into the flexible strap **701**.

In a preferred embodiment, the flexible straps **701** *a*, **701***b*, **701***c*, and **701***d* are coupled to the backplane layer **730** of the display system **700-2**. A thin layer of nonconductive adhesive may be coated over the carrier substrate **704***a*, **704***b*, **704***c*, and **704***d*. The adhesive would be coated over the all of the area that do not have the output pads. Thus, the flexible straps **701***a*, **701***b*, **701***c*, and **701***d* maybe affixed to the backplane layer **730** and the adhesive layer would not block the electrical function of the associated output pads. These output pads therefore, would be able to establish the necessary electrical connections with the top electrode layer **710** for the display **700**.

FIG. **8**A shows an overview of a display system **800**, which can be the signage display **700** in FIGS. **7**A–**7**B. FIG. **8**A illustrates a planar view of the display system **800** and FIG. **8**B illustrates a cross-sectional view of the display system **800**. The display system **800** comprises of a carrier substrate **802**, which includes integrated circuits, for example, block **1**, for driving the display. In one embodiment, carrier substrate **802** is flexible and small. For example, the carrier substrate **802** is considerably smaller than the receiving substrate **801**. The carrier substrate **802** is coupled to pixel electrodes **801**A–**801**D on a receiving carrier substrate **801** through the couplings of connection pads, for instance connection pad **806**A to **807**A, connection pad **806**B to **807**B, connection pad **806**C to **807**C, and connection pad **806**D to **807**D. These couplings would enable the integrated circuit to drive the pixel electrodes **800**A–**800**D in the display system **800**. The display system **800** also comprises insulation layer, display material, and counter electrode or cover glass electrode. They are discussed in details below.

FIG. **8**B shows a cross-sectional view of the display system **800** according to one embodiment of the present invention. The display system **800** includes a carrier substrate **802**, which has receiving openings for functional components such as integrated circuits **802**A, **802**B, and **802**C. The carrier substrate **802** is made using the embodiment discussed above for flexible strip **301** in FIG. **3**. Similar to the embodiments discussed above, the functional components once coupled to the carrier substrate are recessed within the carrier substrate and below the native surface of the carrier substrate. The carrier substrate **802** also includes carrier connection pads **806**A–D, which establish mechanical as well as electrical connections with the receiving substrate **801**.

The receiving substrate **801** can be made using a coarse technology and some coarse materials for making signage display. The display system **800** includes a receiving substrate **801** which further comprising pixel electrodes **801**A–**801**D. The receiving substrate **801** also comprises receiving connection pads **807**A–D. The receiving connection pads **807**A–D are interconnected with the pixel electrodes **801**A–D and thus, when coupled to the carrier connection pads **806**A–D, establish mechanical as well as electrical connections with the carrier substrate **802**. Similar to the embodiments discussed above, the carrier substrate **802** can cross over at least one electrical interconnection on the receiving substrate **801** without damaging or shorting the pixel electrodes on the receiving substrate **801**. The carrier connection pads **806**A–D are also interconnected with the ICs **802**A, **802**B and **802**C. When all the necessary connections are established, the ICs will then drive the pixel electrode of the signage display **800**.

The integrated circuits **802**A, **802**B, and **802**C are display drivers in one embodiment. When proper mechanical and electrical connections are established, these integrated circuits will drive the pixel electrodes in the display system **800**.

The carrier substrate **802** may be made out of a metal, foil, or flexible plastic material. An insulating layer **805** maybe attached to a top surface of the carrier substrate **802**. In such an example, the insulating layer **805** has a plurality of openings through which electrical interconnections can be established (e.g., vias through which carrier connection pads **806**A–D interconnect with receiving connection pads **807**A–D).

A layer **808** may be provided on top of the pixels electrodes and the conductive signals electrodes in order to insulate these parts from the display media material **803** which may be a nematic liquid crystal, an electrophoretic display material, a polymer dispersed liquid crystal material, an organic light emitting diode material, a cholesteric liquid crystal material, an electrochromic material, a particle-based material, a thin-film electroluminescent material, or other known display materials which can be driven by pixel electrodes or other types of display materials which may be controlled by electrodes. A counter electrode or cover glass electrode **804** is typically a thin layer of transparent indium

tin oxide which is deposited upon a cover glass **900** which is transparent. Spacers **809** are attached to the layer **808** and to the cover glass **900** to provide a desired spacing between the counter electrode **804** and the layer **808**.

It can be seen from FIGS. **8A–8B** that carrier substrate **802** acts as an interposer that integrates or interfaces two radically different feature sized electrical devices to each other (e.g., integrating the micro display drivers to the large signage display). The methods described above allow the ICs to be manufactured in the order of sub-micrometer density. The methods above then enable the integration of the submicrometer ICs to a much coarser and larger display. Using this method, the ICs do not need to be made large in order to facilitate the coupling of the ICs into a large display panel. Expensive materials and technologies are thus optimized. This provides for greatly reduced manufacturing costs and improved yield and efficiency in the manufacturing process.

It will be appreciated that the display system **800** illustrates one exemplary embodiment of making display according the present invention. Displays according to the present invention may be used to fabricate displays with liquid crystals, polymer dispersed liquid crystal, electroluminescent (EL) materials, organic light emitting diodes (OLEDs), up and downconverting phosphor (U/DCP), electrophoretic (EP) materials, or light emitting diodes (LEDs).

Fabrication of display panels is well known in the art. Display panels may be comprised of active matrix or passive matrix. Active matrix panels and passive matrix panels may be either transmissive or reflective.

Liquid crystal displays (LCDs), for example, display system **800**, can have an active-matrix backplane in which thin-film transistors are co-located with LCD pixels. Flat-panel displays employing LCDs generally include five different components or layers. A light source, a first polarizing filter that is mounted on one side of a circuit panel on which the thin-film transistors are arrayed to form the pixels such as pixels **801A–801D**. A filter plate containing at least three primary colors are aligned with the pixels (for color displays), and a second polarizing filter. A volume between the circuit panel and the filter plate is filled with liquid crystal material, for instance, layer **803**. This material will rotate the polarized light when an electric field is applied between the thin-film transistor circuit panel and a electrodes affixed to the filter plate or a cover glass. Thus, when a particular pixel of the display is turned on, the liquid crystal material rotates polarized light being transmitted through the material so that it will pass through the second polarizing filter. Some liquid crystal materials, however, require no polarizers. LCDs may also have a passive matrix backplane which is usually two planes of strip electrodes which sandwich the liquid crystal material. However, passive matrices generally provide a lower quality display compared to active matrices. U/DCP and EP displays are formed in similar fashion except the active medium is different (e.g., upconverting gas, downconverting gas, electrophoretic materials).

EL displays have one or more pixels that are energized by an alternating current (AC) that must be provided to each pixel by row and column interconnects. EL displays generally provide a low brightness output because passive circuitry for exciting pixel phosphors typically operates at a pixel excitation frequency that is low relative to the luminance decay time of the phosphor material. However, an active matrix reduces the interconnect capacitance allowing the use of high frequency AC in order to obtain more efficient electroluminescence in the pixel phosphor. This results in increased brightness in the display.

LED displays are also used in flat-panel displays. LEDs emit light when energized. OLEDs operate like the LEDs except OLEDs use organic material in the formation of the light emitting device.

The displays discussed above are particularly useful for signage displays used in airport terminal, commercial signage display, or billboard displays. These types of displays are typically large and the manufacturing of the display panel is relatively cheap due to the fact that they employ a less rigorous technology with large feature sizes. However, the integrated circuit needed to drive these types of displays are expensive to make and have small feature sizes. The method of this invention allows the manufacturers to make the IC very small and still connect them to the large signage display.

The flexible strap **301** is particularly crucial for integrating and interfacing electronic devices of radically different feature sizes. Integrating and interfacing the blocks **1** to a coarse and large display requires the blocks **1** to be large enough in order for the integrating and the interfacing to be feasible. However, to minimize cost in making the IC, the blocks **1** are very small in feature size, for example, the blocks **1** have a densities in the vicinity of sub-micrometer. The signage display is typically in the order of 100–250 micrometer in density. One way to efficiently integrating and interfacing the signage display to the blocks **1** is through using the carrier substrate discussed above for the flexible strap **301**.

The following example illustrates the size differences for a signage display manufactured with the methods described above. The functional block **1** has a total size of 350 μm×500 μm (width×length) with a design feature or design rule of 0.5 μm. The carrier substrate **802** has a total size of 10 mm×10 mm with a design feature of 20 μm. And, the receiving substrate **801** has the total size of 20 in×50 n with the design feature of 250 μm. The carrier substrate is thus about one order of magnitude different from the functional block **1** and an order of magnitude different from the signage display. The embodiments discussed therefore, enable the integrating and the interfacing of electronic devices having radically different density, feature size, and total size, to each other without wastes of expensive material and technology.

An electrical device made according to the embodiments of the present invention also has an advantage of being multi-feature-size. For instance, the carrier substrate **12** may have a feature size (design rule) that is at least five times larger than the block **1**. The carrier substrate **12** also has a feature size that is at least five times smaller than the receiving substrate **310**.

The functional block **1** can be packaged in a flexible strap, the carrier substrate discussed above. Flexible packaging also means that these signage displays can be made flexible which is extremely useful for many purposes. It also means that the sign can be very thin, owing to the thin dimension of the flexible strap.

An electrical device made according to the embodiments of the present invention also has all of the electrical circuitry in the functional components and the necessary interconnections, (e.g., the first interconnection and the second interconnection) are all essentially in coplanar to each other. As can be seen from FIG. **3** and FIG. **5**, when the whole device is assembled together, all of the components mentioned above are essentially in one plane field. Alternatively, all of the electrical circuitry in the functional

components and the necessary interconnection, (e.g., the first interconnection and the second interconnection) each forms a plane that is separated from one another by less than ten micrometers. Therefore the planar electrical circuitry on the functional component, the planar first interconnection on the carrier substrate, and the planer second interconnection on the receiving substrate are all coplanar with each other such that their planes are typically separated by less than 10 micrometers.

We claim:

1. An electronic assembly comprising:

a first object created and separated from a host substrate, said first object having a first electrical circuitry therein;

a carrier substrate coupling to said first object, said carrier substrate further comprising a first carrier connection pad and a second carrier connection pad that interconnect with said first object using metal connectors, at least a portion of said first object being recessed below a surface of said carrier substrate;

a receiving substrate including a second electrical circuitry which is substantially planar, said receiving substrate further including a first receiving connection pad, and a second receiving connection pad that interconnect with said second electrical circuitry using said metal connectors, said first receiving connection pad couples to said first carrier connection pad and said second receiving connection pad couples to said second carrier connection pad providing an electrical connection between said first electrical circuitry and said second electrical circuitry; and

at least one second object, at least a portion of said second object being recessed within said carrier substrate and being interconnected to said first to said first object using said metal connectors.

2. An electronic assembly as in claim **1** further comprising at least one third object, said third object being coupled to said receiving substrate and being interconnected to said second electrical circuitry using said metal connectors.

3. An electronic assembly comprising:

a first object created and separated from a host substrate, said first object having a first electrical circuitry therein;

a carrier substrate coupling to said first object, said carrier substrate further comprising a first carrier connection pad and a second carrier connection pad that interconnect with said first object using metal connectors, at least a portion of said first object being recessed below a surface of said carrier substrate;

a receiving substrate including a second electrical circuitry which is substantially planar, said receiving substrate further including a first receiving connection pad, and a second receiving connection pad that interconnect with said second electrical circuitry using said metal connectors, said first receiving connection pad couples to said first carrier connection pad and said second receiving connection pad couples to said second carrier connection pad providing an electrical connection between said first electrical circuitry and said second electrical circuitry; and

wherein said electronic assembly is a multi-feature-size structure in which said carrier substrate is at least five times larger in feature size than said first object and wherein said carrier substrate is at least five times smaller in feature size than said receiving substrate.

4. An electronic assembly comprising:

a first object created and separated from a host substrate, said first object having a first electrical circuitry therein;

a carrier substrate coupling to said first object, said carrier substrate further comprising a first carrier connection pad and a second carrier connection pad that interconnect with said first object using metal connectors, at least a portion of said first object being recessed below a surface of said carrier substrate; and

a receiving substrate including a second electrical circuitry which is substantially planar, said receiving substrate further including a first receiving connection pad, and a second receiving connection pad that interconnect with said second electrical circuitry using said metal connectors, said first receiving connection pad couples to said first carrier connection pad and said second receiving connection pad couples to said second carrier connection pad providing an electrical connection between said first electrical circuitry and said second electrical circuitry;

wherein said carrier substrate is flexible, and

wherein said electronic assembly is a multi-feature-size structure in which said carrier substrate is at least five times larger in feature size than said first object and wherein said carrier substrate is at least five times smaller in feature size than said receiving substrate.

5. An electronic assembly comprising:

a first object created and separated from a host substrate, said first object having a first electrical circuitry therein;

a carrier substrate coupling to said first object, said carrier substrate further comprising a first carrier connection pad and a second carrier connection pad that interconnect with said first object using metal conductors;

a receiving substrate including a second electrical circuitry which is substantially planar, said receiving substrate further including a first receiving connection pad, and a second receiving connection pad which interconnect with said second electrical circuitry using said metal conductors, said first receiving connection pad couples to said first carrier connection pad and said second receiving connection pad couples to said second carrier connection pad providing an electrical connection between said first electrical circuitry and said second electrical circuitry; and

said carrier substrate crosses over at least one of said metal conductors on said receiving substrate and is at least five times larger in feature size than said first object and at least five times smaller in feature size than said receiving substrate.

6. An electronic assembly as in claim **5** wherein said electronic assembly is a multi-feature-size structure in which said carrier substrate is at least ten times larger than said first object and wherein said carrier substrate is at least ten times smaller than said receiving substrate.

7. An electronic assembly as in claim **6** wherein said carrier substrate couples to said first object through a fluidic self-assembly process.

8. An electronic assembly as in claim **7** wherein said carrier substrate is flexible.

9. An electronic assembly comprising:

a first object created and separated from a host substrate, said first object having a first electrical circuitry therein;

a carrier substrate coupling to said first object, said carrier substrate further comprising a first carrier connection pad and a second carrier connection pad that forms a first interconnection with said first object using metal conductors;

a receiving substrate including a second electrical circuitry which is substantially planar, said receiving substrate further including a first receiving connection pad, and a second receiving connection pad that forms a second interconnection with said second electrical circuitry using said metal conductors, said first receiving connection pad couples to said first carrier connection pad and said second receiving connection pad couples to said second carrier connection pad providing an electrical connection between said first electrical circuitry and said second electrical circuitry; and

said first electrical circuitry, said first interconnection, and said second interconnection are essentially coplanar,

wherein each of said first electrical circuitry, said first interconnection, and said second interconnection forms a plane and each of said planes is separated from one another by less than ten micrometers.

10. An electronic assembly as in claim **9** wherein said carrier substrate is flexible.

11. An electronic assembly as in claim **1** wherein said second electrical circuitry is an antenna.

12. An electronic assembly as in claim **3** wherein said second electrical circuitry is an antenna.

13. An electronic assembly as in claim **4** wherein said second electrical circuitry is an antenna.

14. An electronic assembly as in claim **5** wherein said second electrical circuitry is an antenna.

15. An electronic assembly as in claim **9** wherein said second electrical circuitry is an antenna.

* * * * *