UNITED STATES PATENT AND TRADEMARK OFFICE

BEFORE THE PATENT TRIAL AND APPEAL BOARD

SAMSUNG ELECTRONICS CO., LTD.
Petitioner

v.

MOJO MOBILITY INC.
Patent Owner

Patent No. 11,316,371

PETITION FOR *INTER PARTES* REVIEW
OF U.S. PATENT NO. 11,316,371

TABLE OF CONTENTS

I. INTRODUCTION 1

II. MANDATORY NOTICES 1

III. PAYMENT OF FEES 2

IV. GROUNDS FOR STANDING 2

V. PRECISE RELIEF REQUESTED AND GROUNDS 2

VI. LEVEL OF ORDINARY SKILL 4

VII. THE '371 PATENT 4

VIII. CLAIM CONSTRUCTION 5

IX. DETAILED EXPLANATION OF GROUNDS 6

A. Ground 1: Claim 28 is obvious over *Okada* in view of *Odendaal*, *Shima*, *Hui-027*, and *Kook* 6

1. Claim 28 6

B. Ground 2: Claim 29 is obvious over *Okada* in view of *Odendaal*, *Shima*, *Hui-027*, *Kook*, and *Kazutoshi* 65

1. Claim 29 65

X. DISCRETIONARY DENIAL IS NOT APPROPRIATE 73

XI. CONCLUSION 78

LIST OF EXHIBITS

Ex. 1001	U.S. Patent No. 11,316,371
Ex. 1002	Declaration of R. Jacob Baker, Ph.D., P.E.
Ex. 1003	Curriculum Vitae of R. Jacob Baker, Ph.D., P.E.
Ex. 1004	Prosecution History of U.S. Patent No. 11,316,371
Ex. 1005	Translation of Japanese Patent Application Publication No. 2006-141170A ("*Okada*")[1]
Ex. 1006	U.S. Patent No. 6,912,137 ("*Berghegger*")
Ex. 1007	U.S. Patent Application Publication No. 2006/0145660A1 ("*Black*")
Ex. 1008	U.S. Patent No. 6,960,968 ("*Odendaal*")
Ex. 1009	U.S. Patent No. 6,489,745 ("*Koreis*")
Ex. 1010	U.S. Patent No. 6,366,817 ("*Kung*")
Ex. 1011	Physics, Henry Semat et al., Rinehart & Co., Inc., 1958, Chapters 29-32 ("*Semat*")
Ex. 1012	U.S. Patent No. 5,702,431 ("*Wang*")
Ex. 1013	International Patent Application Publication No. WO1996040367 ("*WangII*")
Ex. 1014	Handbook of Radio and Wireless Technology, Stan Gibilisco, McGraw-Hill, 1999 ("*Gibilisco*")
Ex. 1015	U.S. Patent No. 4,942,352 ("*Sano*")

[1] Exhibit 1005 includes the original Japanese version and a certified English translation. Citations to *Okada* are to the English translation.

Ex. 1016	Fundamentals of Electric Circuits, 2d., Charles Alexander et al., McGraw-Hill, 2004 ("*Alexander*")
Ex. 1017	International Patent Application Publication No. WO1994/18683 ("*Koehler*")
Ex. 1018	Mojo Mobility's Infringement Chart for U.S. Patent No. 11,316,371 (Ex. 4) accompanying Mojo Mobility's Infringement Contentions in *Mojo Mobility Inc. v. Samsung Elecs. Co., Ltd.*, No. 2:22-cv-00398 (E.D. Tex.) (February 28, 2023)
Ex. 1019	U.S. Patent Application Publication No. 2005/0068019 ("*Nakamura*")
Ex. 1020	U.S. Patent Application Publication No. 2007/0109708 ("*Hussman*")
Ex. 1021	U.S. Patent Application Publication No. 2003/0210106 ("*Cheng*")
Ex. 1022	Mojo Mobility's Infringement Contentions in *Mojo Mobility Inc. v. Samsung Elecs. Co., Ltd.*, No. 2:22-cv-00398 (E.D. Tex.) (February 28, 2023)
Ex. 1023	U.S. Patent Application Publication No. 2004/0201988 ("*Allen*")
Ex. 1024	U.S. Patent No. 7,378,817 ("*Calhoon-817*")
Ex. 1025	International Patent Application Publication No. WO2003/096361 ("*Cheng*")
Ex. 1026	International Patent Application Publication No. WO2004/038888 ("*ChengII*")
Ex. 1027	Spiral Inductor Design for Quality Factor, Sang-Gug Lee et al., Journal of Semiconductor Technology and Science, Vol. 2. No. 1, March 2002 ("*Lee*")
Ex. 1028	U.S. Patent Application Publication No. 2001/0055207 ("*Barbeau*")
Ex. 1029	AN710 Antenna Circuit Design for RFID Applications
Ex. 1030	U.S. Patent No. 6,606,247 ("*Credelle*")

Ex. 1031	RESERVED
Ex. 1032	U.S. Patent No. 5,808,587 ("*Shima*")
Ex. 1033	RESERVED
Ex. 1034	U.S. Patent Application Publication No. 2005/0135129A1 ("*Kazutoshi*")
Ex. 1035	RESERVED
Ex. 1036	International Patent Application Publication No. WO2003/105308A1 ("*Hui*")
Ex. 1037	U.S. Patent No. 5,780,992 ("*Beard-1*")
Ex. 1038	RESERVED
Ex. 1039	RESERVED
Ex. 1040	RESERVED
Ex. 1041	RESERVED
Ex. 1042	RESERVED
Ex. 1043	RESERVED
Ex. 1044	U.S. Patent Application Publication No. 2007/0145830A1 ("*Lee-II*")
Ex. 1045	U.S. Patent Application Publication No. 2007/0267718A1 ("*Lee-Via*")
Ex. 1046	U.S. Patent Application Publication No. 2007/0026826A1 ("*Wilson*")
Ex. 1047	U.S. Patent Application Publication No. 2006/0202665 ("*Hsu*")
Ex. 1048	International Patent Application Publication No. WO2009155000A2 ("*Lin*")
Ex. 1049	U.S. Patent Application Publication No. 2008/0067874 ("*Tseng*")
Ex. 1050	U.S. Patent No. 9,356,473 ("*Ghovanloo*")

Ex. 1051	Memorandum from Director Vidal (June 21, 2022)
Ex. 1052	Federal Court Management Statistics (December 2022)
Ex. 1053	Docket Control Order of March 28, 2023, *Mojo Mobility Inc. v. Samsung Elecs. Co., Ltd.*, No. 2:22-cv-00398 (E.D. Tex.)
Ex. 1054	RESERVED
Ex. 1055	RESERVED
Ex. 1056	U.S. Patent No. 6,459,383 ("*Delatorre*")
Ex. 1057	International Patent Application Publication No. WO1999050806A1 ("*Cunningham*")
Ex. 1058	International Patent Application Publication No. WO2004026129A1 ("*Due-Hansen*")
Ex. 1059	U.S. Patent Application Publication No. 2009/0261778 ("*Kook*")
Ex. 1060	RESERVED
Ex. 1061	RESERVED
Ex. 1062	RESERVED
Ex. 1063	ATMEL e5530 Data Sheet (2002)
Ex. 1064	U.S. Patent Application Publication No. 2009/0243799A1 ("*Tetlow*")
Ex. 1065	RESERVED
Ex. 1066	RESERVED
Ex. 1067	RESERVED
Ex. 1068	U.S. Patent Application Publication No. 2003/0095027 ("*Hui-027*")
Ex. 1069	RESERVED
Ex. 1070	RESERVED

Ex. 1071	RESERVED
Ex. 1072	RESERVED
Ex. 1073	RESERVED
Ex. 1074	RESERVED
Ex. 1075	Watson, J., Mastering Electronics, Third Ed., McGraw-Hill, Inc. (1990) ("*Watson*")
Ex. 1076	Sedra, A., *et al.*, Microelectronic Circuits, Fourth Ed., Oxford University Press (1998) ("*Sedra*")
Ex. 1077	GB Patent Application Publication No. 2202414 ("*Logan*")
Ex. 1078	U.S. Patent No. 7,226,442 ("*Sheppard*")

I. INTRODUCTION

Samsung Electronics Co., Ltd. ("Petitioner") requests *inter partes* review of claims 28-29 ("challenged claims") of U.S. Patent No. 11,316,371 ("the '371 patent") (Ex. 1001) assigned to Mojo Mobility Inc. ("PO"). For the reasons below, the challenged claims should be found unpatentable and canceled.

II. MANDATORY NOTICES

Real Parties-in-Interest: Petitioner identifies the following as the real parties-in-interest: Samsung Electronics Co., Ltd., and Samsung Electronics America, Inc.

Related Matter: The '371 patent is at issue in the following matter(s):

- *Mojo Mobility Inc. v. Samsung Electronics Co., Ltd.*, No. 2-22-cv-00398 (E.D. Tex.) (asserting the '371 patent and also U.S Patent Nos. 9,577,440, 11,292,349, 11,201,500, 7,948,208, 11,342,777, and 11,462,942) ("Texas Litigation").
- Petitioner is filing concurrently herewith petitions for *inter partes* review challenging other claims of the '371 patent

The '371 patent originates from U.S. Patent Application No. 17/507,323, filed on Oct. 21, 2021, which is a continuation or continuation-in-part of a sequence of applications dated as early as Jan. 30, 2007. (Ex. 1001, Cover.) The '371 patent also lists multiple provisional applications dated as early as Jan. 31, 2006. (*Id.*)

Counsel and Service Information: Lead counsel: Joseph E. Palys (Reg. No. 46,508), and Backup counsel are (1) Naveen Modi (Reg. No. 46,224), (2) Howard Herr (*pro hac vice* admission to be requested). Service information is Paul Hastings LLP, 2050 M St., Washington, D.C., 20036, Tel.: 202.551.1700, Fax: 202.551.1705, email: PH-Samsung-MojoMobility-IPR@paulhastings.com. Petitioner consents to electronic service.

III. PAYMENT OF FEES

The PTO is authorized to charge any fees due during this proceeding to Deposit Account No. 50-2613.

IV. GROUNDS FOR STANDING

Petitioner certifies that the ’371 patent is available for review and Petitioner is not barred or estopped from requesting review on the grounds identified herein.

V. PRECISE RELIEF REQUESTED AND GROUNDS

The challenged claims should be canceled as unpatentable based on the following grounds:

Ground 1: Claim 28 is unpatentable under 35 U.S.C. § 103(a) as obvious over *Okada*, *Odendaal*, *Shima*, *Hui-027*, and *Kook*; and

Ground 2: Claim 29 is unpatentable under 35 U.S.C. § 103(a) as obvious over *Okada*, *Odendaal*, *Shima*, *Hui-027*, *Kook*, and *Kazutoshi*.

In the Texas Litigation, PO identified the following priority dates for the challenged claims (and possibly up to three months earlier):

(a) 7/30/2007: claim 28; and

(b) 12/12/2007: claim 29.

(Ex. 1022, 6-8.) Without conceding such dates are appropriate, Petitioner assumes for this proceeding those are the effective date(s) for the challenged claims. The asserted prior art herein qualifies as prior art as follows:

Okada (published: 6/1/2006)	§102(b)
Odendaal (filed: 6/26/2002; issued: 11/1/2005)	§§102(b), 102(e)
Shima (filed: 03/21/1997; published: 9/15/1998)	
Hui-027 (filed 10/28/2002; published 5/22/2003)	
Kazutoshi (filed 12/03/2004; published 06/23/2005)	
Kook (filed: 10/25/2006; published: 10/22/2009)	§102(e)

None of these references were considered during prosecution, except the issued patent corresponding to *Hui-027*, Korean version of *Kook*, and a published application co-invented by *Okada* were submitted but not applied. (Ex. 1001, cover; *infra* §X.)

VI. LEVEL OF ORDINARY SKILL

A person of ordinary skill in the art as of the claimed priority date of the '371 patent ("POSITA") would have had at least a master's degree in electrical engineering, or a similar discipline, and two or more years of experience with wireless charging systems, including, for example, inductive power transfer systems. (Ex. 1002, ¶¶20-21.)[2] More education can supplement practical experience and vice versa. (*Id.*)

VII. THE '371 PATENT

During prosecution, in response to objections/rejections (Ex. 1004, 387-406, 632-636), the applicant eventually submitted new claims (*id.*, 600-628, 694-727.) The claims were subsequently allowed because allegedly "the prior art fails to teach or suggest" features associated with the claimed "communication and control circuit" and "regulate" features (*id.*, 733-737). However, those features, and others, recited in the challenged claims relate to a compilation of conventional components/features that were disclosed/suggested by the prior art combinations herein. *See In re Gorman*, 933 F.2d 982, 986 (Fed. Cir. 1991). (*Infra* §IX; Ex. 1002,

[2] Petitioner submits the declaration of R. Jacob Baker, Ph.D., P.E. (Ex. 1002), an expert in the field of the '371 patent. (Ex. 1002, ¶¶3-13; Ex. 1003.)

¶¶22-65, 69-214; Exs. 1005-1017, 1019-1021, 1023-1030, 1032, 1034, 1036-1037, 1044-1050, 1056-1059, 1063-1064, 1068, 1075-1078.)

VIII. CLAIM CONSTRUCTION

The Board only construes the claims when necessary to resolve the underlying controversy. *Toyota Motor Corp. v. Cellport Systems, Inc.*, IPR2015-00633, Paper No. 11 at 16 (Aug. 14, 2015). For purposes of this proceeding, Petitioner believes that no special constructions are necessary to assess whether the challenged claims are unpatentable over the asserted prior art.[3] (Ex. 1002, ¶68.)

[3] Petitioner reserves all rights to raise claim construction and other arguments, including challenges under 35 U.S.C. §112, in district court as relevant to those proceedings. *See, e.g.*, *Target Corp. v. Proxicom Wireless, LLC*, IPR2020-00904, Paper 11 at 11–13 (Nov. 10, 2020). A comparison of the claims to any accused products in litigation may raise controversies that are not presented here given the similarities between the references and the patent.

IX. DETAILED EXPLANATION OF GROUNDS[4]

A. Ground 1: Claim 28 is obvious over *Okada* in view of *Odendaal*, *Shima*, *Hui-027*, and *Kook*

1. Claim 28

a) A system for providing power inductively to a portable device comprising a battery and an inductive receiver unit including a receiver coil and a receiver circuit, the system comprising:

To the extent limiting, *Okada* (including as modified below) discloses this limitation. (Ex. 1002, ¶¶70-84, 106-114; §§IX.A.1(b)-(k).) *Okada* discloses a "**system**" for inductively powering/charging portable devices, *e.g.*, mobile phones. (Ex. 1005, Abstract, ¶¶0001, 0047.) FIG. 1 (annotated below) shows power supply system 1 (blue) including PC2, PDA3 (green) ("**portable device**"), and cradle 4 (red) including LEDs 5, cable/plug 6/7 ("**system**"). (*Id.*, ¶¶0034-0036.) (Ex. 1002, ¶106.)

[4] References to prior art exhibits other than identified asserted prior art in the grounds demonstrate/support a POSITA's state-of-art knowledge at the time, as applicable.

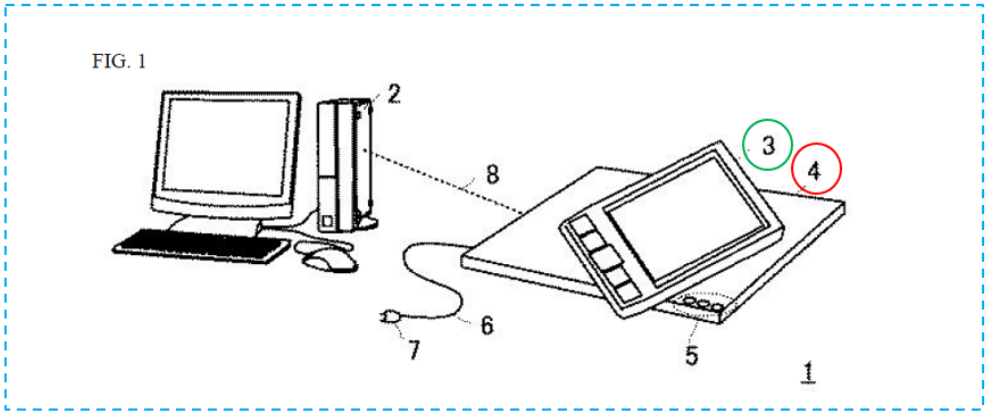

"[M]agnetic coupling" occurs between cradle coil and PDA3 coil, which "induces voltage at both ends of the coil in the PDA" to "suppl[y] power to the PDA." (*Id.*, ¶0035.) (Ex. 1002, ¶106.)

FIG. 2 (annotated below) also describes an exemplary embodiment where cradle 4/PDA3 each includes circuitry/components and at least one coil. (Ex. 1005, ¶¶0035, 0037.) Cradle 4 includes a **power transmitting module 10** ("PTM10") (also an example of a "**system**" (alone or collectively with cradle 4)), and PDA3 includes a **power receiving module 40** ("PRM40"). (*Id.*, ¶¶0035-0037, 0038-0058, FIG. 8, ¶¶0110-0111; Ex. 1002, ¶107.)

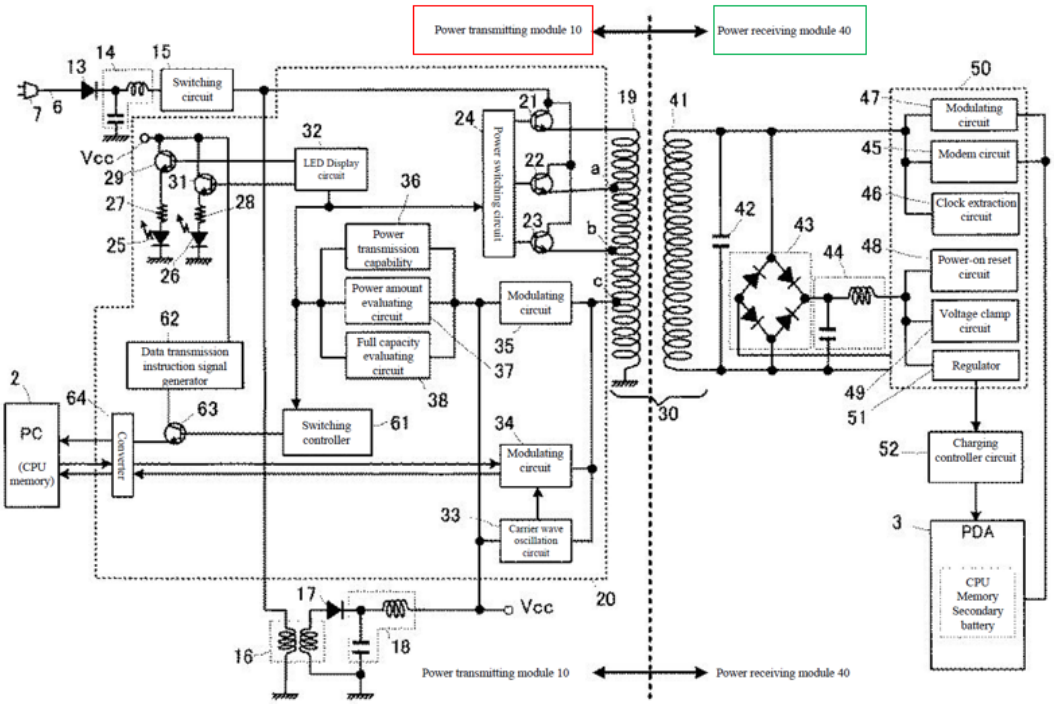

PTM10 converts received power to a DC signal via circuits 13-14. (Ex. 1005, ¶¶0038, 0049.) Switching circuit 15 generates a switching pulse signal using the DC signal (*id.*), which is converted to a DC signal (V_{CC}) powering PTM10 components (via circuits 16-18). (*Id.*, ¶0039.) The pulse signal is also supplied to primary coil 19 via switches 21/22/23. (*Id.*, ¶¶0040, 0049-0051.) Power switching circuit 24 selects a switch 21/22/23 to allow the pulse signal to traverse selected turns of coil 19, enabling the system to select/adjust the power level transmitted to PRM40 (PDA3). (*Id.*, ¶¶0040, 0051, 0057, 0069-0073.) The transmitted power level may be determined based on the device's "power consumption information" provided by PRM40 to PTM10. (*Id.*, ¶¶0057, 0063-0064, 0069-0073; Ex. 1002, ¶108.)

Okada discloses various configurations of such a "system" providing similar

functionalities associated with PTM10 and PRM40, in connection with, *e.g.,* FIGS. 2, 7-17. (Ex. 1005, ¶¶0009-0032, ¶¶0094-0096 (PTM10 and PRM40 including multiple coils), 0097-0154). Applications of these features are described with respect to other exemplary "system[s]." (Ex. 1005, ¶0107, FIG. 9 (below), ¶¶0116-0118, FIG. 10, ¶0119, FIGS. 11(a)-(b) (below), ¶¶0120-0122, FIGS. 12(a)-(b) (below) ¶¶0123-0126, FIGS. 13(a)-(b) (below), ¶¶127-132; Ex. 1002, ¶¶109-110.)

FIG. 9

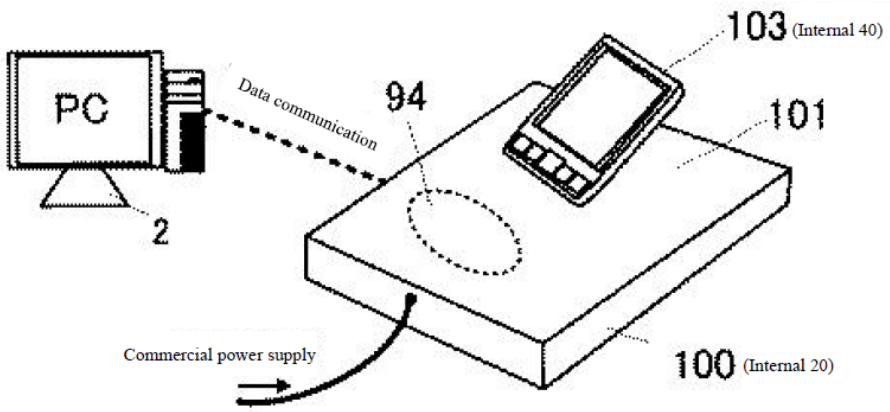

FIG. 10

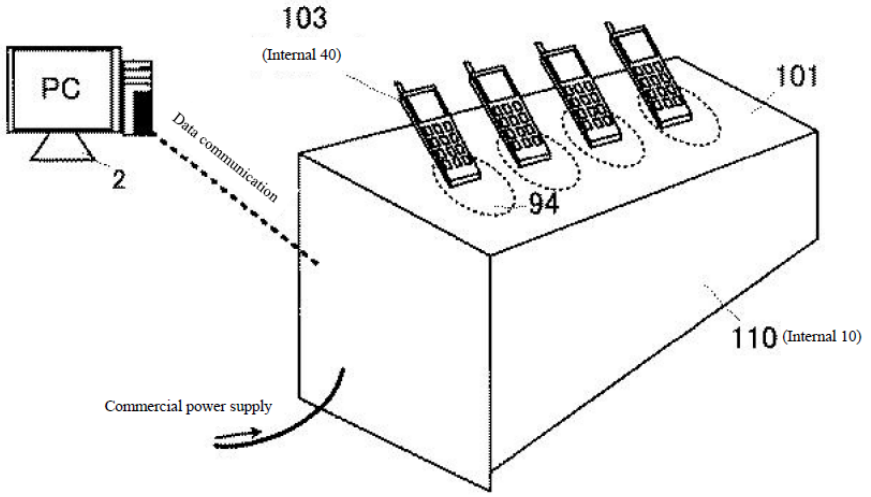

FIG. 11

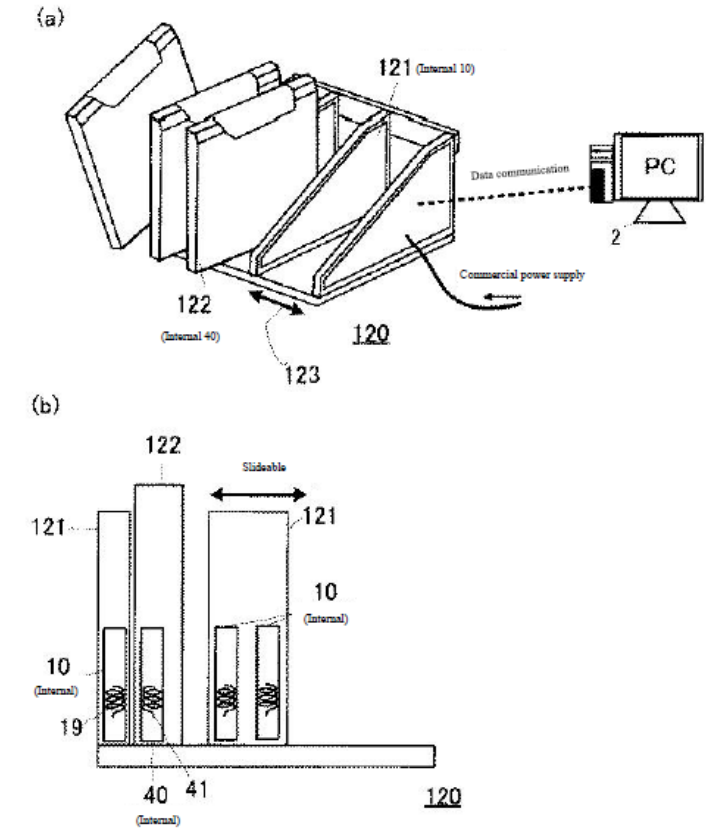
(a)
121 (Internal 10)
Data communication
PC
2
Commercial power supply
122
(Internal 40)
120
123
(b)
122
Slideable
121
121
10
(Internal)
10
(Internal)
19
40
41
(Internal)
120

FIG. 12

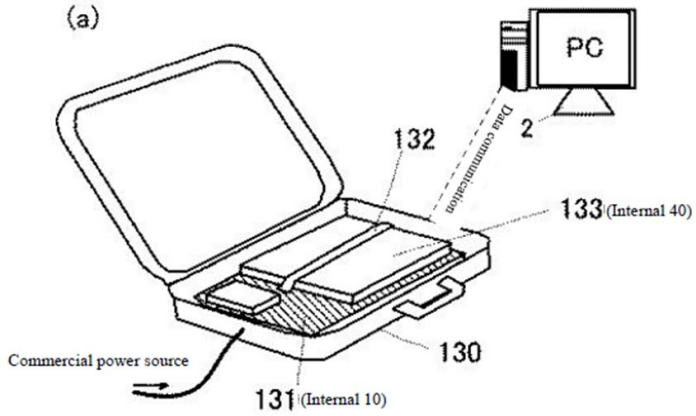
(a)
PC
2
Data communication
132
133 (Internal 40)
130
Commercial power source
131 (Internal 10)

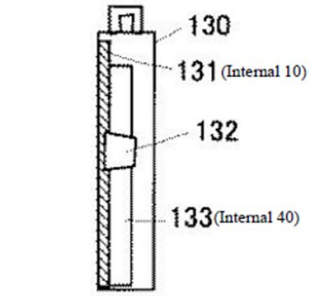
(b)
130
131 (Internal 10)
132
133 (Internal 40)

FIG. 13

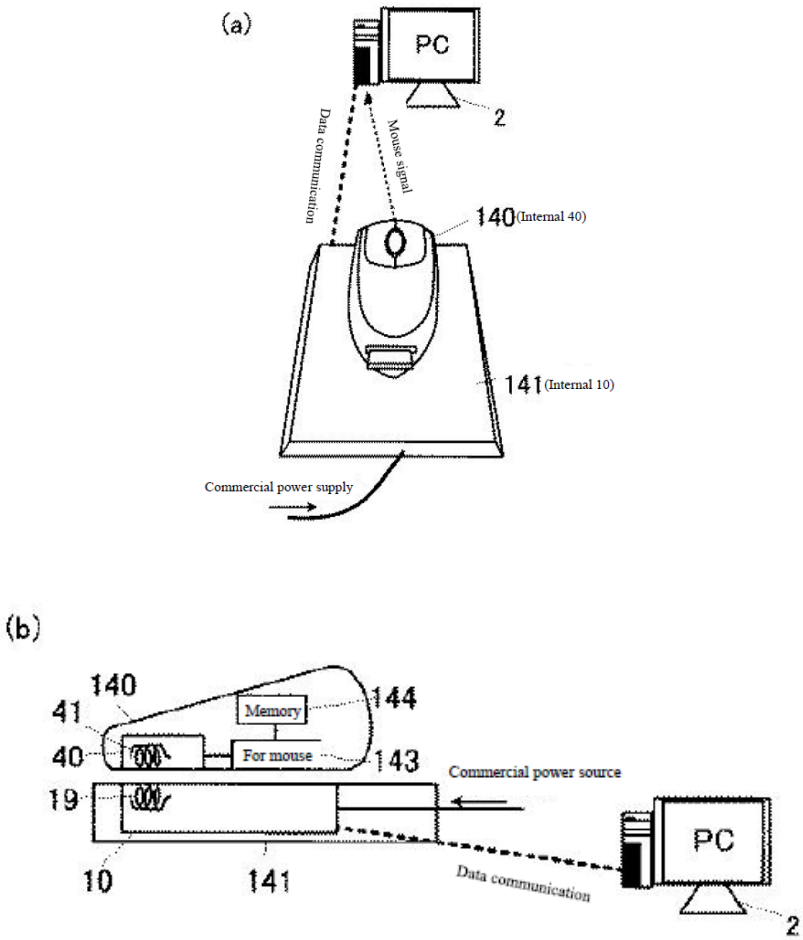

FIG. 3 (below) shows "power supply operations carried out between [PTM10 and PRM40]," applicable to the configurations disclosed by *Okada.* (Ex. 1005, FIG. 3, ¶0059; ¶¶0060-0090; 0094-0115.) Thus, any disclosed configurations including features as recited in the limitations of claim 28 (including as modified) explained below is a "**system**" (*e.g.*, FIGS 1, 2, 7, 9-13). (Ex. 1005, ¶0030; §§IX.A.1(b)-(n); Ex. 1002, ¶¶111-112.)

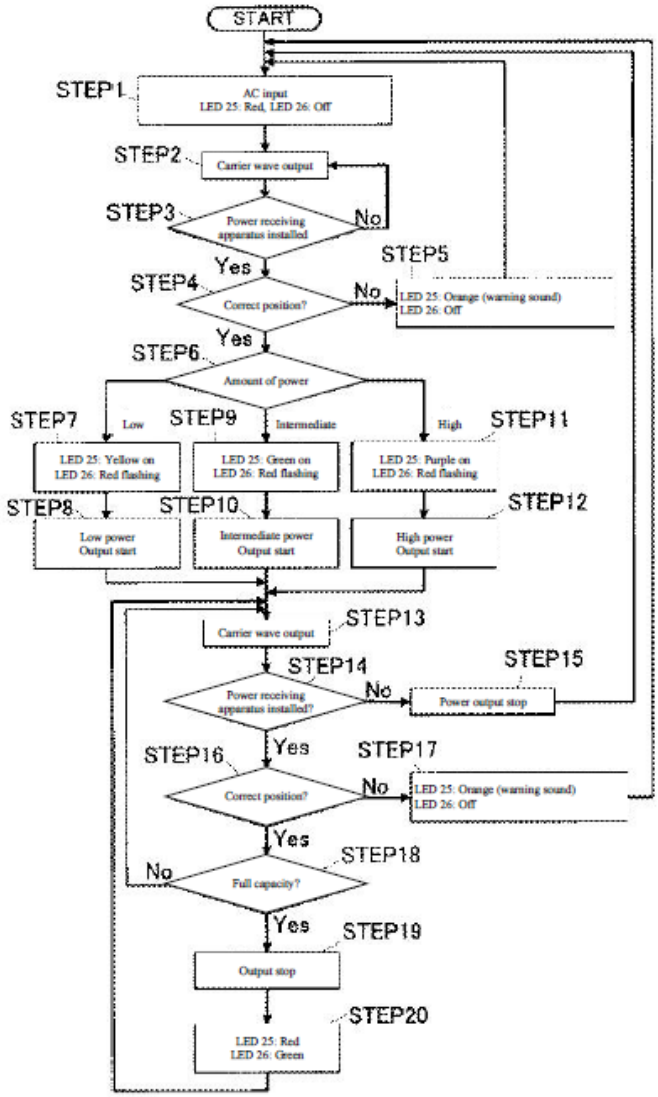

The disclosed "**portable device**" includes "**a battery and an inductive receiver unit**." (Ex. 1002, ¶113.) An exemplary PDA3 includes a "secondary battery" and PRM40. (Ex. 1005, ¶¶0012, 0015, 0037, FIG. 14, ¶¶0134-0136, FIG. 15, ¶¶0138-0140, FIG. 16, ¶¶0142-0144, claim 4, FIG. 2 (**purple** below); Ex. 1002, ¶113.)

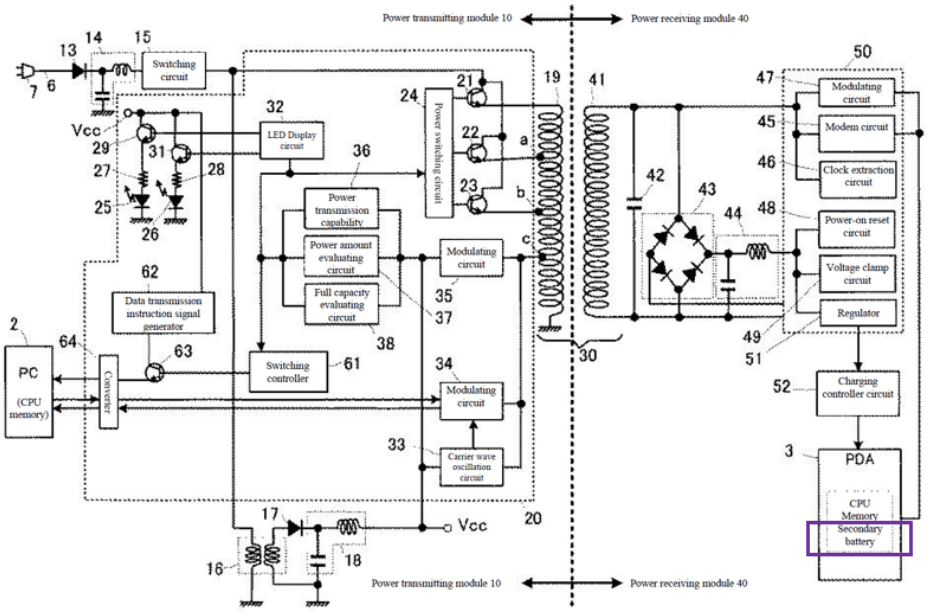

PRM40 in the portable device exemplifies an "**inductive receiver unit**" including "**a receiver coil and a receiver circuit**." (Ex. 1002, ¶114.) FIG. 2 (annotated below) exemplifies a PRM40 ("**inductive receiver unit**") including coil 41 (**orange**) ("**receiver coil**") (Ex. 1005, ¶0040), and a "**receiver circuit**" (e.g., **red** below), which includes at least rectifier 43 (**blue**), clock and modulating circuits 46-47, and may further include one or more other PRM40 components (other than the **battery**) (e.g., circuits 42, 44-45, 48-49, 51, and/or 52). (Ex. 1005, ¶0047; Ex. 1002, ¶114.)[5]

[5] The annotated figures provided herein are exemplary visual aids and are not intended to define limit/constrain the prior art mappings (alone or as modified). Such

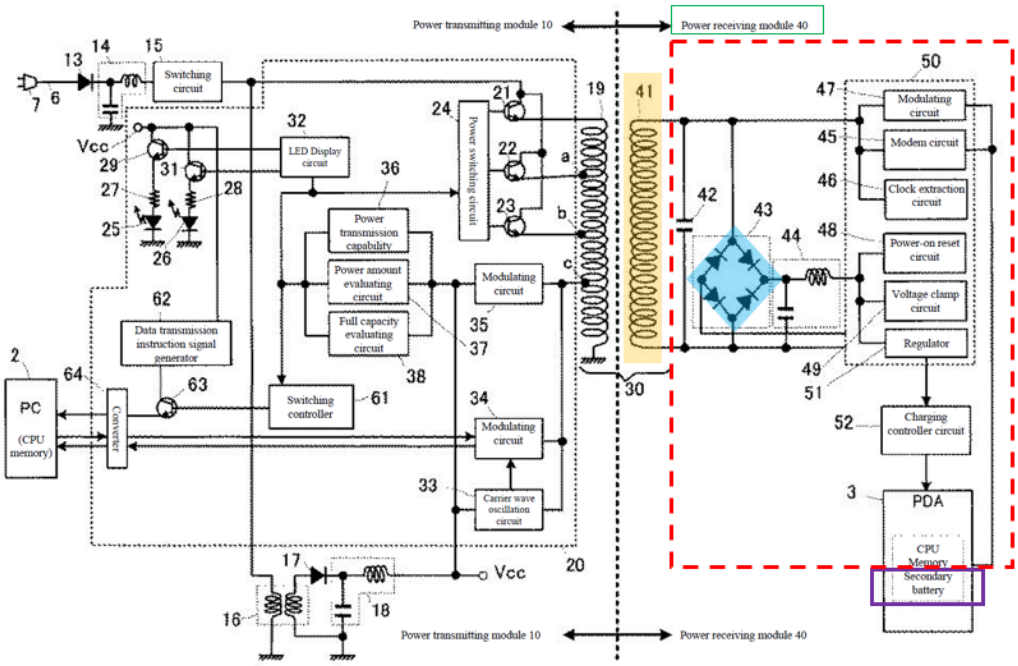

b) a primary coil that is substantially planar and parallel to a surface of the system for providing power inductively to the portable device, wherein the primary coil comprises a flexible Printed Circuit Board (PCB), multi-turn coil having multiple layers of substantially similar patterns of substantially spiral-shaped conductors of 1 to 4 ounce copper thickness for each layer and having coil patterns electrically connected with vias between the layers;

Okada in view of *Odendaal*, *Shima*, and *Hui-027* discloses/suggests this limitation. (Ex. 1002, ¶¶115-146.)

---

mappings may encompass variations of components, or other components/circuitry, etc. not shown but described/suggested by *Okada* (or as modified) that meet the challenged claims as discussed.

Okada's "**system**" includes "**a primary coil**." (§IX.A.1(a); *e.g.*, Ex. 1005, FIG. 2 (**blue** below), ¶¶0040, 0050, FIG. 7, 0095-0107, FIGS. 9-10, ¶¶0116-119, FIGS. 11(a)-(b), ¶0121, FIGS. 12(a)-(b), ¶¶0123-0125, FIG. 13, ¶0132; Ex. 1002, ¶116.)

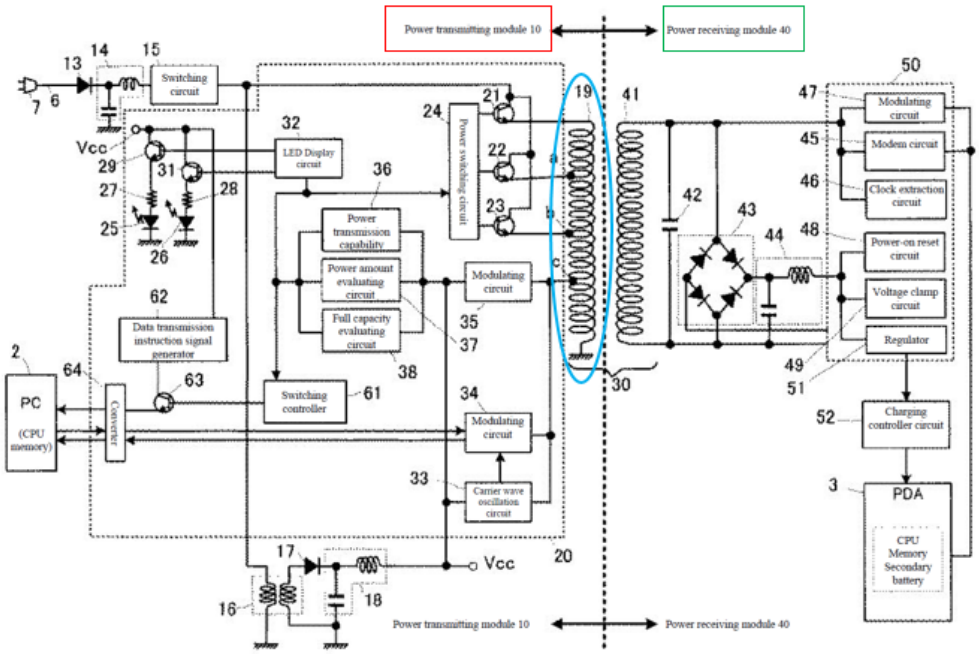

The "**primary coil**" is used for "**providing power inductively to the portable device**." (Ex. 1002, ¶117.) Switches 21/22/23 are selected to provide selected power level(s) transmitted to PRM40 of "**portable device**" via coils 19/41 through induction. (§IX.A.1(a); Ex. 1005, FIG. 3, ¶¶0035, 0040, 0051, 0057, 0069-0073.)

Figures 11(b) and 13(b) show examples of "**primary coil**" 19 positioned "**substantially…parallel to a surface of the system**" (**blue** parallel (**red**) to coil 19

(**orange**) below). (Ex. 1005, FIGS. 11(b) (below left), 13(b) (right); §IX.A.1(a); Ex. 1002, ¶118.) A similar arrangement exists with the other exemplary system configurations discussed above. (Ex. 1002, ¶118.)

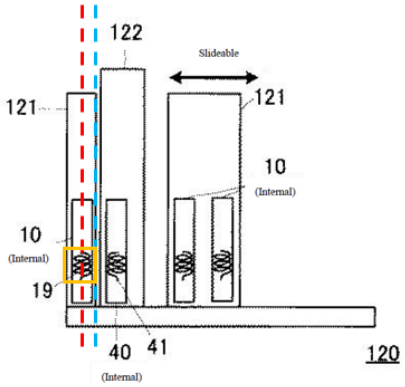

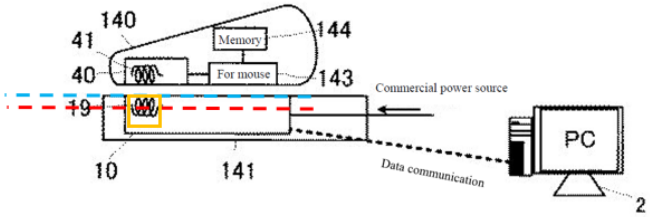

While *Okada* does not expressly state that the "**primary coil…is *substantially planar* and parallel to a surface of the system**," a POSITA would have found it obvious to configure the *Okada* system to implement/use a planar primary coil (and secondary coil) in light of *Odendaal*. (Ex. 1002, ¶119.)

Planar coils placed in parallel to a power transfer system's surface were known. (Ex. 1002, ¶¶120-125 (detailing known planar coil state-of-art); Ex. 1027, 1-3; Ex. 1015, FIGS. 1-2, 3-4, 7-12, Abstract, 1:5-2:29, 2:64-3:27, 3:39-51, 5:5-47, 5:48-9:5; Ex. 1047, FIGS. 1-3, 6, 8A-9, ¶¶0002, 0006-0007, 0018-0025-0034; Ex. 1025, FIGS. 1, 3, 8-9, 13, 1:10-2:3, 2:5-12 (reasons to consider thin coil designs), 2:14-3:2, 4:19-32, 7:25-9:28, 12:27-32, 14:4-17; Ex. 1026, FIGS. 1-2, 5, 9A-9C, Abstract, 1:3-4:4, 4:6-9:4, 11:4-15; Ex. 1009, Abstract, FIGS. 1-3, 1:4-51, 1:54-2:26,

2:47-3:8, 3:9-39, 4:18-60; Ex. 1024, FIGS. 3, 8-9, 1:12-15, 1:39-2:29, 9:41-53, 10:45-57, 11:60-13:4; Ex. 1028, Abstract, FIGS. 2-7, ¶¶0001, 0004-0007, 0025-0032, 0041; Ex. 1029, 1-4, 9-19; Ex. 1030, FIGS. 3-7B, 1:5-9, 1:59-61, 3:19-56, 4:62-67, 5:25-44; Ex. 1036, Abstract, 2:22-3:6 ("primary winding…***substantially parallel*** to [] planar charging surface" and formed on planar PCB), 5:22, 11:18, 23:20-24:8, 24:19-22.)

Aware of such coil designs (and associated tradeoffs, e.g., size/weight/cost/performance), a POSITA would have been motivated to consider relevant teachings (*Odendaal*) when configuring/implementing system similar to *Okada*. (Ex. 1002, ¶¶125-126; *see e.g.,* Ex. 1047, ¶0033.)

Odendaal discloses inductive power transfer technologies/techniques, and like *Okada*, is in the same technical field as the '371 patent. (§IX.A.1(a); Ex. 1008, Title, Abstract, FIGS. 1A-4, 11-12, 1:5-3:57, 4:50-5:8, 5:24-28, 6:59-64; Ex. 1001, Abstract, 1:54-5:17.) Also, like *Okada*, *Odendaal* discloses features reasonably pertinent to particular problem(s) the inventor for the '371 patent (and a POSITA) was trying to solve. (Ex. 1001, 1:60-5:17, 28:11-20; Ex. 1008, Abstract, 1:5-3:57, 4:50-5:8, 5:24-28, 6:59-64; §IX.A.1(a); Ex. 1005, FIGS. 1, 2, 7, 9-12 ¶¶0037-0048, 0049-0058, 0094-0109, 0116-0126.) Such teachings thus would have been consulted when designing/implementing a contactless/inductive charging system, like *Okada*. (Ex. 1002, ¶127.)

Odendaal discloses known use of **planar-type inductor coils** in an inductive power transfer system, for, *e.g.*, charging a cellphone battery. (Ex. 1008, FIGS. 1A-1B, 2A, 2C, 8E, 1:58-2:43.) *Odendaal* describes using a planar resonator for power transfer with characteristics of an integrated inductor-capacitor transformer. (*Id.*, 1:53-57.) The planar resonator includes spirals on opposite sides used for energy transfer "so that a battery of a cellphone could be charged without physical wires." (*Id.*, 1:60-67.) The planar resonator "transfer[s] power across the interface-of-energy-transfer" (IOET) "in either an electric or **magnetic form**, or both." (*Id.*, 2:1-7, 7-10 ("can permit transformer action…**without** capacitive energy transfer"), 2:65-3:5, 4:44-5:8, 6:1-18.) "The spiral-shaped conductor may comprise **pcb** spiral-wound conductors" and "a battery charging circuit can be coupled to one of the…spiral shaped conductors, and **load…coupled to the other**…" where "coupling between" the battery and charger "may comprise…**magnetic coupling,** wherein power is transferred by the **coupling of…and/or magnetic flux** across the IOET." (*Id*., 2:55-64.) *Odendaal*'s teachings of "**planar**" coils (*id.*, 1:60-67) is consistent with that known in the art. (Ex. 1002, ¶¶85-88, 128-130; Ex. 1008, 1:60-67, 2:19-21, 2:29-44, 3:65-67.) Moreover, consistent with the thin form factor configurations of *Okada* (e.g., charging pads/case), *Odendaal* discloses that the spiral coils "are preferably integrated into a **planar (flat/thin) structure**" (Ex. 1008, 3:3-5) and may conform to the housing surface to facilitate charging a device "in

close proximity" (*id.*, 2:29-44). Such arrangements disclose coils that are parallel to a system's surface. (Ex. 1002, ¶131.)

In light of such teachings, and state-of-art knowledge, a POSITA would have been motivated, and found obvious, to modify the *Okada* system to use a "**primary coil**" that is **"substantially planar and parallel to a surface of the system**" (and complemented such a design with corresponding planar secondary coil(s) in the portable device) to expand/complement applications compatible with those contemplated by *Okada* to use thin(ner) devices. (Ex. 1002, ¶132; §IX.A.1(a).) Such a modification would have provided options to reduce the volume the coil(s) occupy, device size/weight, and expanded/enhanced applications of *Okada* (*e.g.*, pads, tables) (*Id.*; §IX.A.1(a); Ex. 1005, FIGS. 1, 9, 10-16, ¶¶0033-0034, 0116-0146.) Planar coils provided options to reduce the distance between primary/secondary coils (promoting close proximity coupling (Ex. 1008, 2:29-44)) for improving power transmission efficiency, reducing energy waste, and shortening charging time. (Ex. 1002, ¶132; Ex. 1005, ¶¶0066-0068, 0112, FIGS. 4(a)-4(b); Ex. 1036, 24:19-22.) A POSITA would have appreciated that implementing complementary planar coils (primary-secondary) would have promoted efficient energy transmission between the charger and receiver devices, especially where the coils were aligned to allow the perpendicular magnetic field generated by the

primary coil(s) to be efficiently received by the receiving coil(s). (Ex. 1002, ¶132; §IX.A.1(i).)

A POSITA would have had the skills and rationale in light of the teachings/suggestions of *Okada-Odendaal*, and a POSITA's state-of-art knowledge, to implement the above-modification while considering design tradeoffs and techniques/technologies with a reasonable expectation of success, especially given that such a modification would have involved known technologies/techniques (*e.g.*, planar coils to facilitate wireless power transfer) to yield the predictable result of providing an inductive powering/charging system with thinner charger units, like that contemplated by *Okada-Odendaal*. (Ex. 1002, ¶133; §IX.A.1(a).) *See KSR Int'l Co. v. Teleflex, Inc.*, 550 U.S. 398, 416 (2007).

Odendaal discloses the primary coil may be "a set of **spiral coils**…with each spiral being a conductor trace **on a separate substrate**, such as **flex** or **printed circuit board**" (Ex. 1008, 2:19-28, 3:41-48 (multi-layer coils)) and that "number of turns of spirals" may be adjusted (*id.*, 6:59-64) ("**a flexible Printed Circuit Board (PCB), multi-turn coil having multiple layers…of substantially spiral-shaped conductors**"). In addition to reasons discussed above for modifying *Okada* in view of *Odendaal*, a POSITA would have been motivated and found obvious to include these features, *e.g.*, a primary coil made of a flexible PCB having a set of multi-layer spiral-shaped coils, when implementing the *Okada-Odendaal* system. (Ex. 1002,

¶134.) It would have allowed forming flexible coils/substrate to be used in charger systems having different surfaces (*e.g.*, either rigid or flexible). (Ex. 1002, ¶134; Ex. 1008, 2:30-44 (disclosing a charger surface being a fabric).) Moreover, multi-layer spiral-shaped coils were known to increase the generated magnetic field. (Ex. 1002, ¶134; Ex. 1008, 3:41-48.)

A POSITA would have had the skills and rationale in light of the teachings/suggestions of *Okada-Odendaal*, and state-of-art knowledge, to implement the above-modification while considering design tradeoffs and techniques/technologies with a reasonable expectation of success. Especially given such modification would have involved known technologies/techniques (*e.g.*, flexible PCB having a set of multi-layer spiral-shaped coils) to yield the predictable result of expanding/complementing applications of an inductive powering/charging system, like that contemplated by *Okada-Odendaal*. (Ex. 1002, ¶135; §IX.A.1(a).) *See KSR* at 416-18. A POSITA would have been further motivated to implement in the *Okada* system a primary coil comprising a flexible PCB, multi-turn coil having multiple layers of substantially similar patterns of substantially spiral-shaped conductors in light of the teachings of *Shima*, as explained below.

Indeed, to the extent the *Okada-Odendaal* combination does not expressly disclose a primary coil comprising multi-layer spiral-shaped flexible PCB coils having "**multiple layers of substantially similar patterns**" of spiral-shaped

conductors and "**having coil patterns electrically connected with vias between the layers**," a POSITA would have found it obvious to do so given that was a common design for interconnecting multi-layer PCB circuit arrangements, as exemplified by *Shima*. (Ex. 1002, ¶136.)

Shima, like *Okada-Odendaal*, discloses an inductive power/signal transfer system using primary and secondary coils (Ex. 1032, Abstract, 1:42-50, 2:12-4:10, 5:62-6:53, 7:17-8:38), and thus is similarly in the same technical field as the '371 patent. (§IX.A.1; Ex. 1001, Abstract.) Likewise, *Shima* discloses features reasonably pertinent to particular problem(s) the '371 patent inventor and a POSITA was trying to solve. (*Id.*; Ex. 1001, Abstract, 11:5-10; Ex. 1002, ¶137.) Therefore, a POSITA had reasons to consider/consult *Shima* when looking to design/implement the above-discussed *Okada-Odendaal* system. (*Id.*)

Shima discloses coils having similar spiral patterns that reside on different layers of PCBs ("**coil having multiple layers of substantially similar patterns of substantially spiral-shaped conductors**"), where the coil patterns are connected by through-holes (which a POSITA would have understood to be "vias"). (Ex. 1002, ¶¶89-91, 138.) For example, FIG. 3A (below) is described having "a plurality of thin printed-circuit substrates 30-1 to 30-n having similar coil patterns 32-1 to 32-n." (Ex. 1032, 5:62-6:1, FIGS. 3D-3E (below), 6:13-35.) Starting and terminating ends of the coil patterns are connected using through-holes 33 and 34, respectively.

(*Id.*, 6:4-21.) Layers of loop patterns (*e.g.*, 37-1 to 37-n (FIG. 5A (below))) may also "have the respective through-holes [39] connected in such a way that a spiral coil is formed in the direction in which the printed-circuit substrates 30-1 to 30-n are stacked." (*Id.*, 7:17-35.) (Ex. 1002, ¶138.)

FIG. 3A

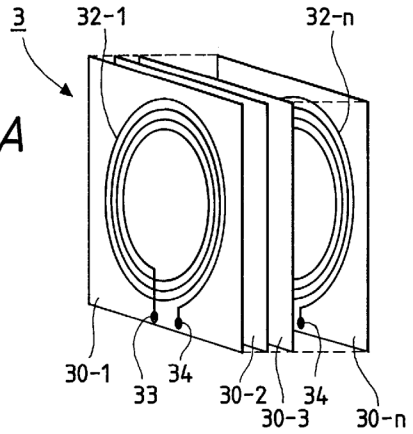

FIG. 5A

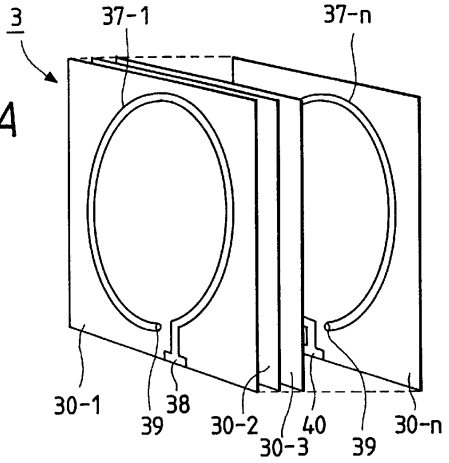

FIG. 3D

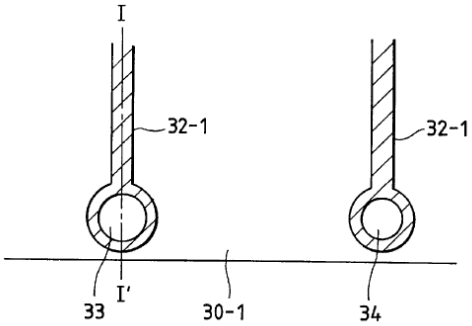

FIG. 3E

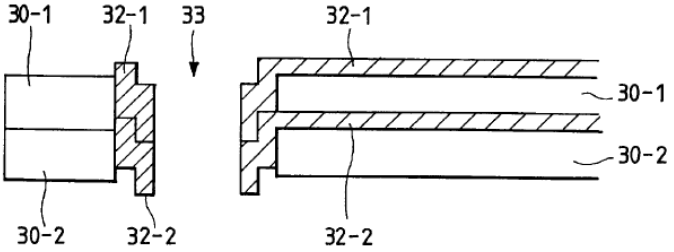

In view of *Shima* and *Odendaal*, a POSITA would have been motivated and found obvious to configure/implement the primary coils in the *Okada-Odendaal* system (§IX.A.1) as a flexible PCB multi-turn coil having layers of substantially similar patterns of substantially spiral-shaped conductors with coil patterns electrically connected with vias between the layer to maintain continuity while

providing a compact coil configuration with enhanced efficiency and reduced conductor resistance as suggested by *Shima*. (Ex. 1002, ¶139; Ex. 1032, 6:47-53, 7:41-44, 8:28-33.) A POSITA would have appreciated the versatility in applications taught by *Okada* (§IX.A.1(a)) and known stacked PCB coil designs and ways to interconnect them (vias) (*Shima/Odendaal*), and thus been motivated to design/implement various system designs that were consistent with such applications, including thin form factor configurations. Moreover, implementing a coil with layers having substantially similar patterns would have reduced the complexity of designing and manufacturing as compared to a multi-layer coil having different patterns. (*Supra*; Ex. 1002, ¶139.)

A POSITA would have had the skill and rationale in implementing, and reasonable expectation of success in achieving, such a modification, especially since it was known to use vias to connect multi-layered flexible PCBs. (Ex. 1002, ¶140; Ex. 1045, ¶0026, FIGS. 3A-C; Ex. 1032 (*supra*).) Thus, such a modification would have involved applying known technologies/techniques to yield the predictable result of providing a charger with multi-layer flexible PCB primary coils that would have performed power/signal communications consistent with that discussed above for the *Okada-Odendaal* system. (§IX.A.1.) *KSR* at 416-18.

While *Okada-Odendaal-Shima* discloses/suggests the above-discussed primary coil features, the combination does not expressly disclose that the multi-

layer coil has "**1 to 4 ounce copper thickness for each layer**." Nevertheless, a POSITA would have found it obvious to implement such a feature given that copper PCB-coils were well-known and thickness thereof was commonly designed within that range, as exemplified by *Hui-027*. (Ex. 1002, ¶141.)

Hui-027, like *Okada-Odendaal-Shima*, discloses an inductive power/signal transfer system using primary and secondary coils. (Ex. 1068, Abstract, ¶¶0001-0004, 0030-0033, 0039-0042, 0065, 0067, Table I, FIGS. 1, 2, 3a, and 3b), and thus is similarly in the same technical field as the '371 patent. (§IX.A.1(a); Ex. 1001, Abstract.) Likewise, *Hui-027* discloses features reasonably pertinent to particular problem(s) the '371 patent inventor and a POSITA was trying to solve. (*Id.*; Ex. 1001, Abstract, 11:5-10; Ex. 1002, ¶142.) Therefore, a POSITA had reasons to consider/consult *Hui-027* when looking to design/implement the *Okada-Odendaal-Shima* inductive charging system discussed above. (Ex. 1002, ¶142.)

Hui-027 discloses PCB coils made of copper of certain thickness. (Ex. 1002, ¶¶92-94, 143.) For instance, Table I (below) shows that the PCB coils of FIGS. 3a and 3b (below) have a "Copper Track Thickness" of "70 μm (**2 Oz/ft^2**)" and FIG. 3b illustrates that the "Conductor **Thickness**" corresponds to that of the primary winding. (Ex. 1068, ¶¶0004, 0030, FIGS. 3a and 3b.)

TABLE I

Geometric Parameters of the PCB Transformer

Geometric Parameter	Dimension
Copper Track Width	0.25 mm
Copper Track Separation	1 mm
Copper Track Thickness	70 μm (2 Oz/ft^2)
Number of Primary Turns	10
Number of Secondary Turns	10
Dimensions of Ferrite Plates	25 mm × 25 mm × 0.4 mm
PCB Laminate Thickness	0.4 mm
Insulating Layer Thickness	0.228 mm
Transformer Radius	23.5 mm

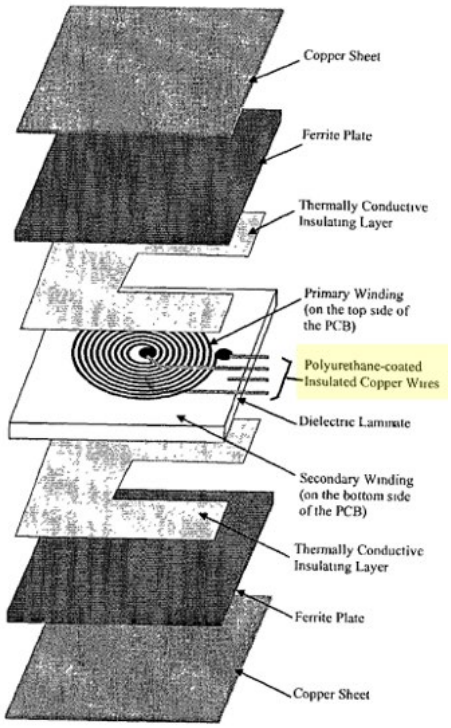

Fig. 3a.

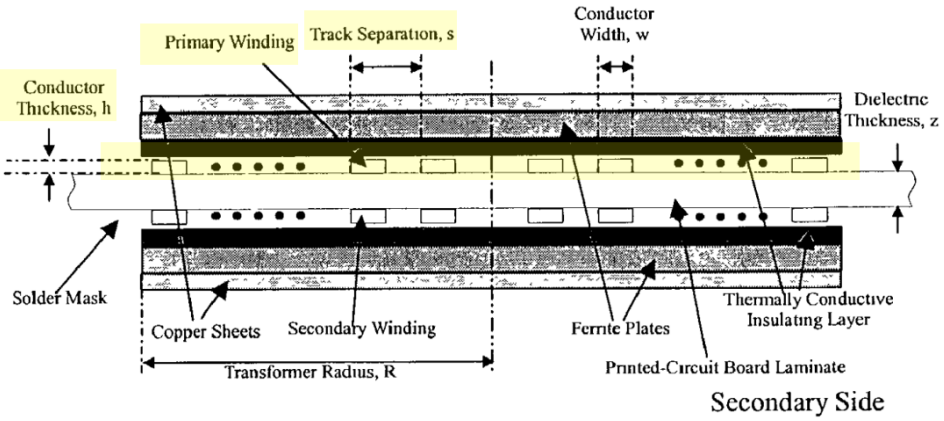

Fig. 3b.

In view of *Hui-027*, a POSITA would have been motivated and found obvious to configure/implement the above-modified primary coil in the *Okada-Odendaal-Shima* system (*supra*) with spiral-shaped copper conductors having a thickness of a few ounces (*e.g.*, 1 to 4 ounces) for each layer, as suggested by *Hui-027*, especially when the *Okada-Odendaal*, while disclosing use of PCB coils, does not provide specifics regarding type of coil material and its thickness. (Ex. 1002, ¶144.) Indeed, the '371 patent acknowledges that "[m]ost common PCBs use 1-2 oz copper PCBs." (Ex. 1001, 22:1-2.)

Moreover, using a multi-layer coil having "**1 to 4 ounce copper thickness for each layer**" would have been a matter of routine optimization of a result-effective variable (the thickness of copper, which may affect electrical conductivity/weight of the coil), well within a POSITA's grasp and technical ability, as acknowledged by the '371 patent. (Ex. 1002, ¶145.) *See E.I. DuPont de Nemours & Co. v. Synvina C.V.*, 904 F.3d 996, 1010 (Fed. Cir. 2018) ("[D]iscovery of an

optimum value of a result effective variable in a known process is ordinarily within the skill of the art.") (quoting *In re Boesch*, 617 F.2d 272, 276 (CCPA 1980)).

Additionally, a POSITA would have had the skill and rationale in implementing, and reasonable expectation of success in achieving, such a modification. (Ex. 1002, ¶146.) Especially since it was known to use a multi-layer coil having a thickness of a few ounces, *e.g.*, 2 oz. (Ex. 1068, Table 1; Ex. 1001, 22:1-2; Ex. 1002, ¶146.) Thus, such a modification would have involved applying known technologies/techniques to yield the predictable result of providing a charger with a (primary) copper coil having a certain thickness, *e.g.*, 2 oz, which would have performed power/signal communications consistent with that discussed above for the *Okada-Odendaal-Shima-Hui-027* system. *KSR* at 416-18.

c) Limitation 28(c)

Okada-Odendaal-Shima-Hui-027 in view of *Kook* discloses/suggests this limitation, as discussed below in two parts. (Ex. 1002, ¶¶147-169.)

(1) a drive circuit, including a FET driver, a capacitor and a FET switch, coupled to a DC voltage input and coupled to the primary coil,

Okada-Odendaal-Shima-Hui-027 in view of *Kook* discloses/suggests this limitation. (Ex. 1002, ¶¶147-162.)

Switching circuit 15 in PTM10 generates a switching pulse signal supplied to primary coil 19 via a switch 21/22/23 selected by power switching circuit 24.

Switches 21/22/23 can be MOSFETs ("**FET switch**"). (Ex. 1005, ¶¶0040, 0049; Ex. 1002, ¶148.) The switching pulse signal is also converted (via circuits 16-18) to V_{CC} for powering PTM10 components. (§IX.A.1(a); Ex. 1005, ¶¶0038-0040, 0046, 0049-0051, FIG. 2.) Such PTM10 components are (directly/indirectly) coupled/configured to drive/power primary coil 19. (Ex. 1002, ¶149.) Circuits 16-18 provide power to other components, *e.g.*, circuit 33, which output signals driving coil 19 to send a carrier wave signal to PRM40. (Ex. 1005, ¶¶0062-0063, ¶¶0010-0014, 0042-0046, 0055-0058, Claims 2-3, 6; §§IX.A.1(d)-(g).) Circuit 15 also provides the switching pulsed signal to (FET) switch 21/22/23, and together with circuit 24, provides signals that drive coil 19 to transfer power. (*Id.*; Ex. 1005, ¶¶0040, 0049-0051, 0070-0073.)

Thus, *Okada*'s examples of a "**drive circuit**" include: **(1)** switching circuit 15 (including as modified below) and circuits 21-24, **(2)** same with circuits 16-18 (providing Vcc for IC 20, including circuit 24 (controlling (FET) switches 21/22/23)), **(3)** same with circuit 33 (driving coil 19 to send carrier wave to PRM40), or **(4)** a combination of such components (with/without other circuitry in IC 20). (*Id.*, FIG. 2 (annotated below (pink)).) The "**drive circuit**" includes an "**FET driver**" (*e.g.*, switch 15, circuit 24, and/or one or more of circuits 16-18, or a combination of such components) and "**a FET switch**" (*e.g.*, switch 21/22/23). (Ex.

1002, ¶150.) [6] These components forming the "**drive circuit**" are (directly/indirectly) coupled to rectifier/smoothing circuits 13/14 (providing a "DC voltage") (Ex. 1005, FIG. 2, ¶0038, FIG. 17, 0148-0149 (battery 181 input)) thus having a "**DC voltage input**" and also (directly/indirectly) coupled to coil 19 ("**primary coil**") (Ex. 1005, FIG. 2, ¶¶0039-0049; Ex. 1002, ¶150).

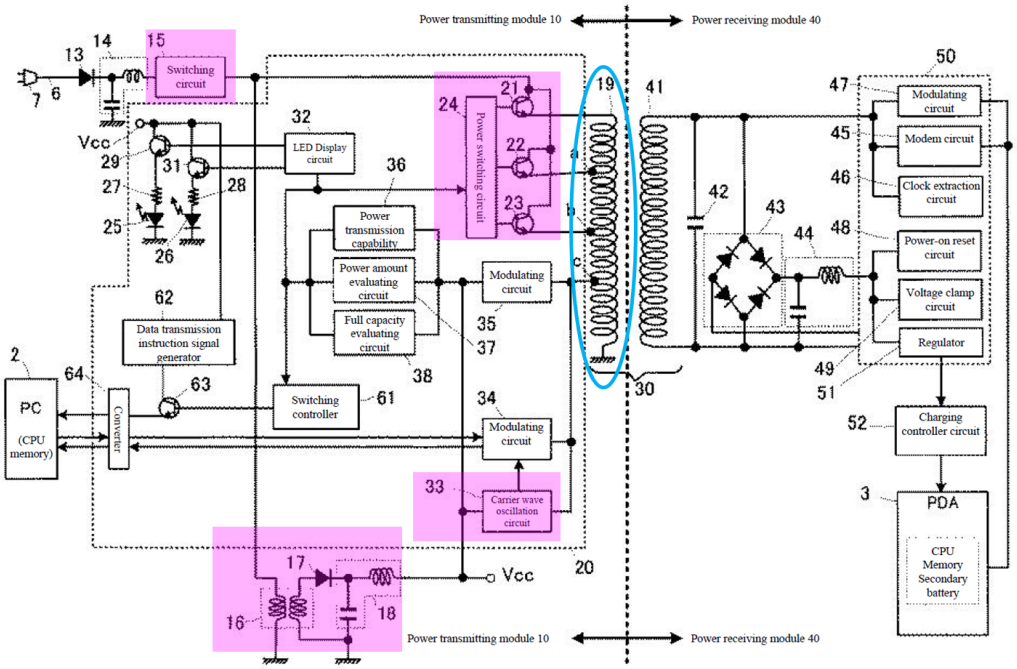

[6] *Okada*'s circuitry that provides a switching signal to power primary coil 19 is similar to drive circuitry discussed in the '371 patent. (§IX.A.1(a); Ex. 1001, 22:45-49, 24:3-4, 41:38-47, 44:5-6.) (Ex. 1002, ¶150.)

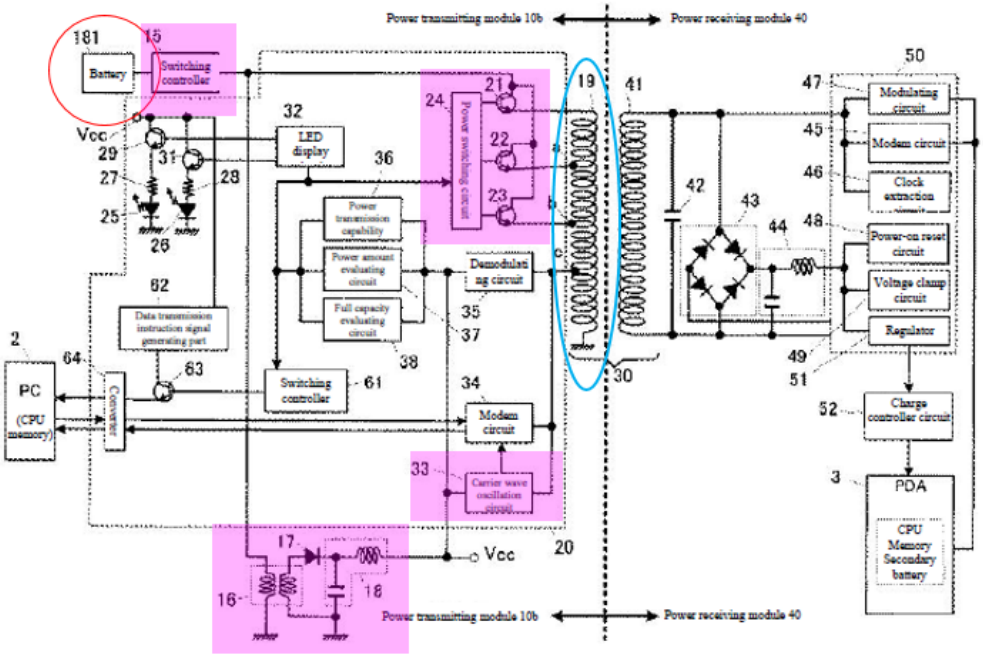

Okada does not expressly disclose the drive circuit(s) having a "**capacitor.**" Nevertheless, a POSITA would have found it obvious to modify the *Okada-Odendaal* system to include such features in light of *Kook*. (Ex. 1002, ¶151.) *Kook* is in the same technical field as the '371 patent and *Okada* and discloses features reasonably pertinent to particular problem(s) the inventor for the '371 patent (and POSITA) was trying to solve. (Ex. 1001, Abstract, 1:54-5:16; §§IX.A.1(a)-(c); Ex. 1059, Abstract, ¶¶0009, 0035, 0041, 0049.) Thus, a POSITA would have consulted *Kook* in context of *Okada-Odendaal*. (Ex. 1002, ¶151.)

Indeed, *Kook* discloses "a non-contact charger capable of wireless data communication and…charging battery-pack of a mobile device." (Ex. 1059, Abstract, ¶¶0001, 0006, 0037-0042.) Charger 1 (blue below) receives power from

computer 100 to power/charge mobile device 300 having a battery pack 200 (containing battery 230 (yellow)), via primary coil 70 and secondary coil 80 (both orange). (Ex. 1059, ¶¶0015 (mobile device has battery-pack 200), 0032, 0036-0037, FIG. 1 (below (rectification block 81 of battery pack 200 providing VREC (purple) to charger controller 210 of the same)).) (Ex. 1002, ¶¶95-100, 152.)

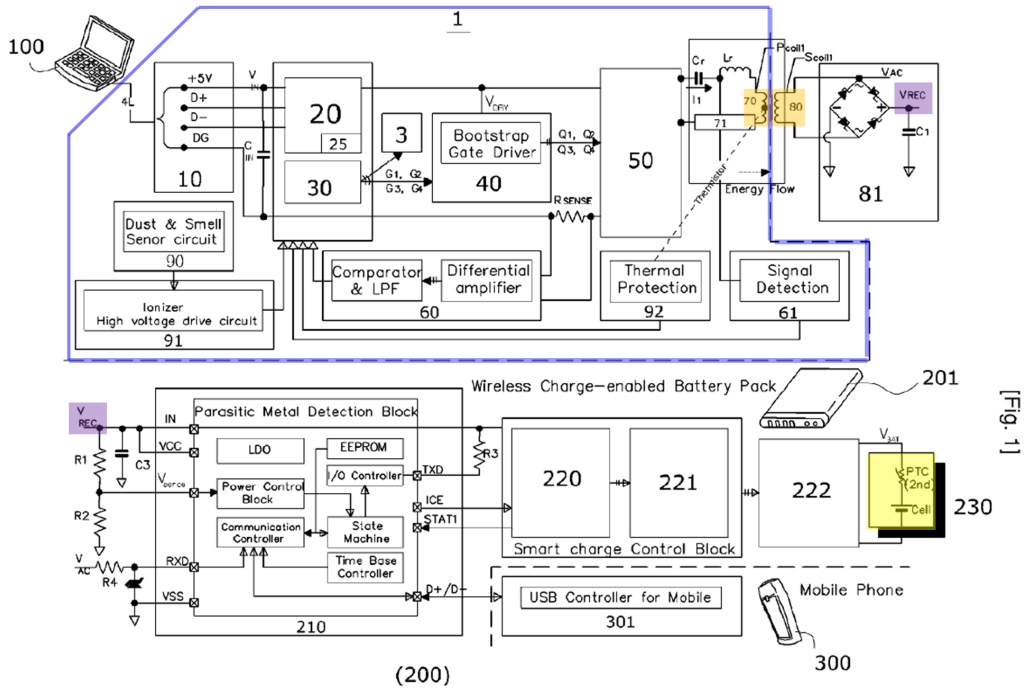

[Fig. 1]

Charger 1 includes an MPU 30 "for controlling internal elements" of charger 1. (Ex. 1059, ¶0041.) Charger 1 also includes gate drive block 40 (magenta below) and serial resonator converter 50 (*e.g.*, a LLC full/half wave type serial resonator converter, green), a "**C-L resonator**" (red (**Cr**/Lr)), coupled to primary coil 70, and current sensing block 60 (blue). (*Id.*, ¶¶0032-0035, 0041.)

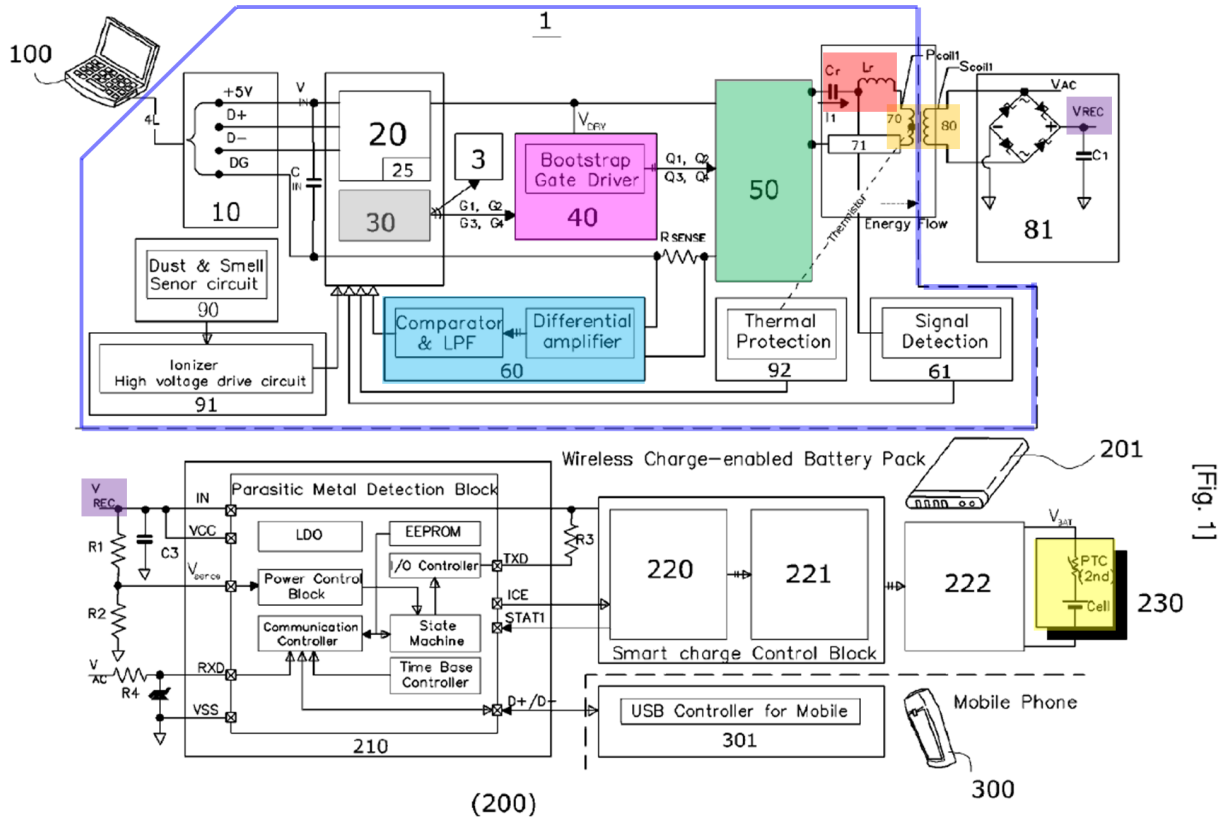

[Fig. 1]

The "C-L resonator" coupled to primary coil 70, including capacitor Cr, also discloses a "**capacitor**." (Ex. 1059, FIG. 1, ¶0041.) By using a "resonator converter to induce LC resonance," it "make[s] an electric current into a sine wave and transmit[s] an electric power to the secondary side by means of the inductive coupling." (*Id.*, ¶0049; Ex. 1002, ¶153.) Consistent with that known in the art and *Kook*, a POSITA would have understood such a capacitor-based circuit would have allowed the coil to transmit less-distorted and efficient signals (*e.g.*, sine wave) with reduced harmonics. (Ex. 1002, ¶153.) Indeed, a POSITA was aware that capacitor-based circuits (similar to that taught by *Kook*) improved signal transmissions in

inductive-based systems, like *Okada-Kook* (*e.g.*, minimizing/reducing unwanted radiations and heat issues caused by harmonics, etc.). (Ex. 1002, ¶153; Ex. 1016, 631 ("Resonant circuits…useful for constructing filters"), 641, 798, ("**blocks out all higher harmonics**"); Ex. 1013, (capacitor/switches reducing harmonics from primary coil), FIGS. 3 (annotated below), 6, 3:29-4:5, 4:19-5:7, 7:24-8:14, 8:17-23, 24-31, 9:26-12:27; Ex. 1008, 2:16-19 (resonant tank); Ex. 1001, 22:13-30 (acknowledging harmonics are "undesirable").)

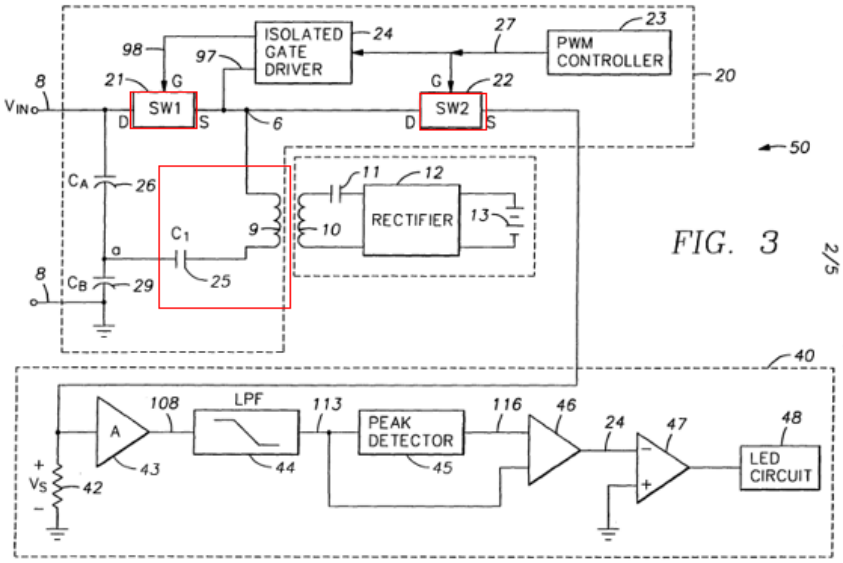

(*See also* Ex. 1012, FIGS. 2, 5 (C1 25, inductor 9), 8, 3:30-62, 8:47-9:51; Ex. 1014, 67-68 ("filter…for ***reduction of harmonic output***"); *id.*, 62-68; Ex. 1015, FIGS. 1-2, 5-12, Abstract, 1:55-2:10, 3:28-51, 4:22-44, 5:45-6:4; Ex. 1020, Abstract, (harmonic reducing tuning capacitor); Ex. 1021, ¶¶00164-0165; Ex. 1029, 22-25; Ex. 1002, ¶154.)

In light of *Kook* in context of a POSITA's knowledge, a POSITA would have been motivated to consider/implement a capacitor with the above-discussed "drive circuit" and primary coil arrangement in PTM10 of the modified *Okada-Odendaal* system to improve power transmission and reduce harmonics, consistent with that known in the art. (Ex. 1002, ¶155.) A POSITA would have had the skill and rationale in implementing, and expectation of success in achieving, the above-modification, especially given the known benefits of capacitor-based filter circuits and use of capacitor(s) to enhance the transmission efficiency in inductive power transfer systems, and that the modification would have involved implementation of known technologies/techniques (capacitor-based filter design). (*Id.*) For example, a POSITA would have known, and been motivated to consider/implement, an appropriately designed capacitor-based circuit/filter positioned between switches 21/22/23 and primary coil 19, or between switching circuit 15 and the switches, (each as part of the "**drive circuit**" discussed above), which would have achieved the above-noted filtering benefits (*e.g.*, reduced harmonics). (*Id.*)

Beyond the capacitor-based disclosures noted above, a POSITA would have also recognized other advantages/benefits from *Kook*'s teachings in context of *Okada* (which are relevant to features recited in other limitations (e.g., limitation 28(k), discussed below (§IX.A.1(k)))). Namely, while capable of adjusting power levels based on device power requirements and selective switching at the **onset** of a

charging process, *Okada* does not expressly indicate controlling power levels **during** the charging process. (Ex. 1005, ¶¶0069-0076, FIG. 3.) Nevertheless, in light of *Kook*'s other teachings, a POSITA would have found it obvious to modify the *Okada-Odendaal* system to include such features. (Ex. 1002, ¶156.)

Namely, in addition to that described above, *Kook* describes feedback controlled type functionalities that allow the charger to adjust the operating frequency of the charger circuit, to control charging power/voltage to the portable device **during** charge/power transfer operations. (Ex. 1002, ¶157.) For example, in connection with FIG. 1 (annotated above) *Kook* explains that current sensing block 60 "stably control[s] an electric power through a current **feedback** using an automatic variation algorithm of **primary** frequency so as…to control a voltage of a **secondary** rectification terminal in the charging battery-pack 200." (Ex. 1059, ¶¶0041.)

Kook also explains that current sensing block 60 analyzes "a signal of the secondary coil 80 to recognize the mobile device 300, monitor the primary coil 70 and the secondary coil 80 to control a charge voltage to a stable voltage." (*Id*., ¶0033; *see also id.*, ¶0047 ("voltage of the secondary rectification terminal…is controlled to a constant voltage" via coils 70/80, which "may control the secondary charging power…using an automatic variation algorithm of primary frequency of the non-contact charger 1"), ¶0083 ("adjusting a voltage of the secondary side to the

stable voltage…using a parameter (frequency)"); Ex. 1002, ¶157.)

A POSITA would have understood that resonator converter 50 includes switching FETs and a capacitor. (Ex. 1002, ¶158.) Indeed, *Kook* describes bootstrap "***gate*** drive block 40" providing four signals Q1-Q4 to serial resonator converter 50. (Ex. 1059, FIG. 1, ¶¶0009, 0032-0035, 0041.) A POSITA would have understood such signals necessarily control corresponding "gates" of associated **FET** switches in converter 50 since it was understood that only FET switches have "gate(s)" (unlike a BJT) and *Kook* discusses "switching" in relation to converter 50. (Ex. 1002, ¶158; Ex. 1059, ¶¶0049, 0075.) As explained, *Kook* describes converter 50 as including an "LLC" serial resonator converter (Ex. 1059, ¶¶0009, 0041, 0033, 0064), which a POSITA would have understood denotes a **capacitor** ("C") with inductors ("LL"). (Ex. 1002, ¶158.)

In light of such teachings/suggestions of *Kook*, a POSITA would have been further motivated, and found obvious, to configure the above modified *Okada* system such that the switching circuit 15 (part of the "**drive circuit**" (as modified above to implement an **FET driver**, **FET switch**, and a **capacitor** coupled to the primary coil, similar to the features described/suggested by *Kook*, of the "**system**")) to improve/enhance power transmission control during charging operations, by adjusting the switching/operating frequency of the primary circuitry in response to current feedback information, while providing a more efficient power transfer via

capacitive filtering as discussed above. (Ex. 1002, ¶159.) A POSITA would have appreciated the guidance of *Kook*, which describes a closed-loop feedback arrangement, where powering/charging is controlled through a current feedback by varying the primary-side circuit operating frequency using FET driver/switch/capacitor-based circuitry.[7] (*Id.*, ¶159; Ex. 1059, ¶¶0033, 0041, 0047, 0083.)

Such a configuration would have improved/complimented the *Okada-Odendaal* system, which also uses device information to control/adjust power delivery in a closed-loop feedback fashion, but does so at the onset of charging, not during charging. (Ex. 1005, ¶¶0069-0076, FIG. 3; §§IX.A.1(a), (e).) Implementing features similar to those described above would have improved the power transmission control in the modified *Okada* system, providing a stabilized voltage for the battery of the mobile device, for efficient power transfer/consumption during charging operations. (Ex. 1002, ¶160.)

[7] A POSITA would have appreciated configuring the "drive circuit" In the modified *Okada* system to use "FET switches/FET driver"-circuitry with the modified switching circuit 15 to accommodate the frequency adjustment features discussed above. (Ex. 1002, ¶159 n.9.)

Consistent with that explained above, a POSITA would have had the skill and rationale in implementing, and expectation of success in achieving, the above-modifications, especially given the use of capacitor(s) and closed-loop feedback control technologies/techniques for adjusting power delivery was known (*e.g.*, *Okada* and *Kook*). (Ex. 1002, ¶161.) Such a modification would have involved applying known technologies/techniques (*e.g.*, FET-based drive circuitry in closed-loop feedback power transfer system with capacitive filtering to adjust power delivery (*Okada* and *Kook*, state-of-art knowledge)) to yield the predictable result of an inductive power/charging system that ensures sufficient power is available to portable device during power delivery that achieves energy-efficient continuous power transfer with reduced heat waste and signal distortion. (Ex. 1002, ¶161.) *KSR* at 416-18.

There were various ways for a POSITA to implement such modifications. (Ex. 1002, ¶162.) For example, in addition to implementing an appropriately designed/positioned capacitor-based circuit/filter (*see supra*), a POSITA would have been motivated to configure/leverage features/components in *Okada*'s system that are used to receive/pass/process device information for power transfer control (*e.g.*, demodulator 35, circuits 36-38 (Ex. 1005, ¶0064; *infra* §§IX.A.1(e)-(k))) to achieve the noted predictable and beneficial power delivery features during charging/powering operations (Ex. 1002, ¶162.) For instance, a POSITA would

have recognized/appreciated the benefits of configuring the system to receive current feedback information/signals (*e.g.*, via demodulator 35, processed by one/more circuits (*e.g.*, 36-38), provided to the modified switching circuit 15) to vary the operating frequency of the primary side "drive circuit" to control a voltage of output by the rectifier circuitry 43 used to charge/power the battery in the portable device. (Ex. 1002, ¶162; *infra* §§IX.A.1(e)-(k).)[8]

(2) wherein during operation the drive circuit is configured to apply an alternating electrical current to the primary coil at an operating frequency within a range of 100 kHz to 1 MHz and duty cycle to generate an alternating magnetic field in a direction substantially perpendicular to the surface of the primary coil to provide power inductively to the portable device;

The *Okada-Odendaal-Shima-Hui-027-Kook* combination discloses/suggests this limitation. (Ex. 1002, ¶¶163-169.)

As discussed, the modified *Okada* system would have been configured to include a drive circuit (with FET driver, FET switch, capacitor) having current-based

[8] Such exemplary configurations do not limit the possible modifications/implementations of the modified system. Other successful designs/configurations within the capabilities/knowledge of a POSITA would have been contemplated to achieve the same functionalities. (Ex. 1002, ¶162.)

closed-loop feedback control to adjust the power/voltage used to charge the portable device battery by adjusting the operating frequency on the primary side. (§IX.A.1(c)(1).) In light of *Kook-Okada,* a POSITA would have understood that the configured drive circuit in the modified *Okada* system, during operation, would have provided **an alternating electrical current** to the primary coil 19 at an "**operating frequency and duty cycle**," consistent with the features taught/suggested by *Kook*. (Ex. 1002, ¶164; Ex. 1059, ¶¶0041 ("stably controlling an electric power through a current feedback using an automatic variation algorithm of primary frequency"), 0047, 0083 ("receives AC current from the secondary coil 80"); §IX.A.1(c)(1); Ex. 1005, ¶¶0110-0111.)

Moreover, *Shima* discloses that it was known to drive a primary coil at "the operating frequency…typically on the **low order of several hundred kHz**." (Ex. 1032, 1:33-48; *see also id.*, 1:63 ("antenna coils").) In view of *Shima*, a POSITA would have been motivated and found obvious to configure the disclosed "drive circuit" in the above-modified *Okada* system to operate in the hundreds of kHz range. (Ex. 1002, ¶165.)

Indeed, operating a drive circuit at "a range of 100 kHz to 1 MHz" would have been a matter of routine optimization of a result-effective variable (the operating frequency of the drive circuit, which may affect power transmission efficiency, harmonics/noise reduction/generation, skin effects), well within a POSITA's grasp

and technical ability, as acknowledged by the '371 patent. (*Id.*, ¶166; Ex. 1001, 53:1-7 (disclosing that "the radiation at the fundamental operating frequency (100's of kHz to several MHz), can be self-contained within the coil area. However, noise at higher frequencies (such as the test range of 30 MHz to 1 GHz) must be reduced to avoid interference with other nearby electronic devices."); Ex. 1032, 2:50 ("skin effect of high-frequency currents substantially increases the conductor resistance R.").) *See E.I. DuPont de Nemours & Co. v. Synvina C.V.*, 904 F.3d 996, 1010 (Fed. Cir. 2018) ("[D]iscovery of an optimum value of a result effective variable in a known process is ordinarily within the skill of the art.") (quoting *In re Boesch*, 617 F.2d 272, 276 (CCPA 1980)).

A POSITA would have had the skill and rationale in implementing, and reasonable expectation of success in achieving, such a modification, especially since it was known to operate a drive circuit of a wireless power transfer system at the range of hundreds of kHz. (Ex. 1032, 1:33-48; Ex. 1002, ¶167.) Thus, such a modification would have involved applying known technologies/techniques (*e.g.*, operating a drive circuit in a frequency range of hundreds of kHz (*Shima*)) to yield the predictable result of an inductive power/charging system that effectively transfers power at a given operating frequency range. *KSR* at 416-18.

Additionally, a POSITA would have also understood that the ac signal applied to the primary coils in the modified *Okada* system (employing a planar coil) would

have generated a "**substantially perpendicular**" "**alternating magnetic field**" as claimed, given such a field would have been the natural result of activating the planar primary coil to inductively transfer power to the portable device as described by *Okada*, *Odendaal*, and *Kook*. (Ex. 1002, ¶168; Ex. 1005, ¶¶0035, 0051, 0056, 0063, 0066, 0121, ¶¶0127-0132, FIGS. 11(b) and 13(b); Ex. 1059, ¶¶0032, 0037-0042; §IX.A.1(c); Ex. 1011, 557-562, 593-594, 601; Ex. 1009, 2:62-3:8 ("current is inducted into" receiving device "when magnetic field lines are approximately 90 degrees to the first part of the transformer"), 1:54-2:18, 3:20-4:11, FIGS. 1-3; Ex. 1010, FIGS. 1-5B, 8:55-9:52, FIGS. 6A-10, 7:21-8:54, 9:53-10:22, 11:27-14:67; Ex. 1029, 3-4, 27-50; Ex. 1019, FIG. 2B, ¶¶0027, 0064.)

Indeed, a POSITA would have understood the planar primary coils in the *Okada-Odendaal-Shima-Hui-027-Kook* system, when providing power inductively to the coil of the portable device (which also may be planar in the modified system), would have likewise generated a magnetic field that was substantially perpendicular to the surface of primary coil 19, as known in the art. (Ex. 1002, ¶169; §IX.A.1(c); Ex. 1011, 558, 559 ("magnetic field at the center of [a wire] loop is perpendicular to the plane of the loop"), 562-564, 592; Ex. 1048, Abstract, FIGS. 1-6, 1:28-2:4, 2:27-3:14, 4:11-24, 5:23-6:15, claims 1-88; Ex. 1049, Abstract, FIGS. 1, 5-6, 9, 11-12, 24-26, ¶¶0008-0010, 0044-0051, 0065-0066; Ex. 1050, Abstract, FIGS. 1-5, 9A-9C,

5:22-6:45, 11:22-33, 12:28-38, 16:25-17:23, 17:61-18:3 ("**substantially perpendicular**" magnetic field from planar coils).)

d) a sense circuit to monitor current flow through the primary coil during operation of the drive circuit to sense a current modulation in the primary coil from a modulation of a current in the receiver coil; and

The *Okada-Odendaal-Shima-Hui-027-Kook* combination discloses/suggests this limitation. (Ex. 1002, ¶¶170-175.)

Limitation 28(d) recites "a sense circuit…to **sense a current modulation** in the primary coil from a modulation of a current in the receiver coil." (*See also* §IX.A.1(f) (reciting "detect, through the **sense circuit**, a received communication of information in the **current modulation** in the primary coil ").) In *Okada*, PTM10 transmits a carrier wave signal to PRM40, resulting in PDA3 to generate/send a modulated signal including device information back to PTM10 via coils 41 and 19. Circuit 35 "**demodulates modulated** signals included with the voltage from" primary coil 19 (Ex. 1005, ¶0042), and the information is evaluated by circuits 36-38 as part of power transfer operations. (Ex. 1005, FIG. 3, ¶¶0060-0077; Ex. 1002, ¶171.) Thus, demodulating circuit 35 is an example of "**a sense circuit**" given it senses/receives/demodulates a modulated response signal from PRM40 via coil 19. (Ex. 1005, FIG. 2, ¶¶0050, 0064, 0069, 0076; Ex. 1002, ¶171.)

Okada's teachings are also consistent with PO's litigation assertions, which points to a demodulator or the like for the claimed "**sense circuit**." (Ex. 1018, 25-

26 (alleging accused device includes "**demodulation** circuitry"), 27 ("**demodulation** filter"), 29 ("a **demodulator** as relevant to this part of the claim"), 154.)[9]

Okada explains that the modulation method may be based on "periodic intensity modulation of a carrier wave and may use a phase modulation method to express 0/1 information via phase change information of a signal." (Ex. 1005, ¶0058.) However, to the extent that *Okada-Odendaal-Kook* does not disclose "a sense circuit to **monitor current flow** through the primary coil during operation of the drive circuit to sense **a current modulation in the primary coil from a modulation of a current in the receiver coil**," a POSITA would have found it obvious to implement such features. (Ex. 1002, ¶172.)

Indeed, modulating/demodulating a waveform (as discussed in *Okada*) and sensing communications based on monitoring an inherent property of the waveform (e.g., current) in order to detect/sense/process information contained therein during charging operations (operation of the drive circuit) would have been one of "a finite number of identified, predictable solutions" for including/encoding/decoding information from the portable device in the modified system, such as information

[9] Petitioner does not concede any feature in the accused instrumentalities meet this or any claim limitation.

used to confirm power reception equipment, full charge, and/or power level used to verify presence/alignment of coils, consistent with that disclosed by *Okada*. (Ex. 1002, ¶173; Ex. 1005, ¶¶0056-0057, 0062-0064.) *KSR* at 421. Thus, a POSITA would have been motivated to configure the modified *Okada* system to provide current modulation/demodulation-type techniques/technologies (including current sense circuit(s) that monitor current flow in the primary coil 19) to facilitate the communication of information from the secondary side coil, consistent with that known in the art. (Ex. 1002, ¶173; Ex. 1056, Abstract, 2:7-9, 2:38-44, 4:21-34, 5:12-14, 6:12-33; Ex. 1057, 9:20-24, 15:16-21, 21:21-22:3, FIGS. 1-3, 11-13; Ex. 1058, Abstract, FIGS. 1, 3A-8, 3:25-4:35, 5:27-7:23, 10:22-24, 10:25-12:17; *infra* §IX.A.1(g).) (*See also* Ex. 1001, 24:32-45 (discussing "current modulation" in context of conventional technologies, which supports that such features were known); Ex. 1063.)

Indeed, *Okada* describes verifying PDA3's presence by measuring intensity of the signal(s) communicated via primary coil 19 and secondary coil 12. (Ex. 1005, FIGS. 4(a)-4(b), ¶¶0066-0068, 0074-0076, FIG. 8 (current sensor 91), 0110 ("**current measuring sensor**" measuring current "through the primary-side coil 19" when PDA3 "is in proximity" of cradle 4), 0111.) Thus, a POSITA would have found it obvious to configure/implement such current sensing/detecting/modulation/demodulation features in the modified *Okada*

system/device for detecting communications of the modulated information signal (*e.g.*, device capability code) when received via coil 19 (detected as current corresponding to current modulation in coil 19 induced from the current modulation via coil 41) so that it is timely/properly detected, demodulated, and used to verify that PDA3 is "placed in a correct position" and "capable of data transmission and reception." (*Id.*, ¶0080, FIGS. 3, 8, 4(a)-4(b), ¶¶0081-0082; Ex. 1002, ¶174.)

A POSITA would have been motivated to implement such a modification in light of *Okada*'s teachings, *e.g.*, using signal intensity and sensed current in coil 19 for determining/verifying PDA3 presence, and state-of-art knowledge (as exemplified above). A POSITA would have considered various ways of configuring the modification, such as configuring the "sense circuit" associated with current sensor 91, demodulation circuit 35, and/or other components to allow PTM10 to monitor the current flow through coil(s) 19 to sense/detect communications from PRM40 via coil 41, consistent with known current modulation/demodulation techniques as explained. (Ex. 1002, ¶174.)

A POSITA would have had the requisite skills and rationale to design/implement such a "**sense circuit…**" and related current modulation/demodulation-type features in the modified *Okada* system/device, and done so with a reasonable expectation of success given the teachings of *Okada* and the knowledge of such a POSITA at the time, especially since such modification

would have involved applying known technologies/techniques (as discussed above) to predictably yield an inductive power transfer system that senses/detects communications received by coil 19 via known current modulation/demodulation techniques in the *Okada-Odendaal-Kook* system. (Ex. 1002, ¶175; *infra* §§IX.A.1(e)-(k).) *KSR*, 550 at 416.

e) a communication and control circuit, including a microcontroller coupled to the drive circuit and the sense circuit, configured to:

The *Okada-Odendaal-Shima-Hui-027-Kook* combination discloses/suggests this limitation. (Ex. 1002, ¶¶176-181.)

Circuit 33 provides a carrier wave to PRM40 that causes responsive device information from circuit 47 of PRM40 via coils 41-19 to be received/processed by demodulator 35. (§§IX.A.1(c)(1); Ex. 1005, ¶¶0056-0057, 0062-0064.) Evaluation circuits 36-38 "perform various decision-making processes based on information included in the signal demodulated by the demodulating circuit 35." (Ex. 1005, FIG. 2, ¶0042, FIG. 3, ¶¶0060-0077.) Those circuits control power transmission processes (FIG. 3) by providing signals to circuit 24 that controls/selects switches 21/22/23 (part of "**drive circuit**"). (Ex. 1005, FIG. 3, ¶¶0057-0076; §§IX.A.1(a), (c)(1).) Circuits 36-38 provide a signal to switching control 61 (Ex. 1005, ¶0045) that determines whether "data can be **transmitted and received**" (*id.*, ¶0081, ¶¶0082-0085) and whether PDA3's charge capacity exceeds a "minimum capacity"

for it to transmit/receive data (*id.*, ¶¶0082-0089, FIG. 6). Circuits 36-38 additionally control LEDs 25-26 that communicate charging status to a user. (*Id.*, ¶¶0041, 0053-0055, 0061, 0069-0072, 0077, FIG. 5; Ex. 1002, ¶177.)

Thus, one or more circuits 36/37/38 disclose one example of "**a communication and control circuit** [FIG. 2, yellow below]…**coupled to the drive circuit** [*e.g.*, §IX.A.1(c)(1) pink] **and the sense circuit** [§IX.A.1(d), 35 blue]" as claimed. (*Supra*; Ex. 1002, ¶178; Ex. 1005, FIG. 2; *see also infra* §§IX.A.1(f)-(k).) Other components may also be included in such claimed "**communication and control circuit**," *e.g.*, switching controller 61, signal generator 62, controller 64, and/or "switching controller 73" in the multi-coil arrangement of FIG. 7 "system," (Ex. 1005, FIG. 7 (yellow below), ¶¶0094-0115.)

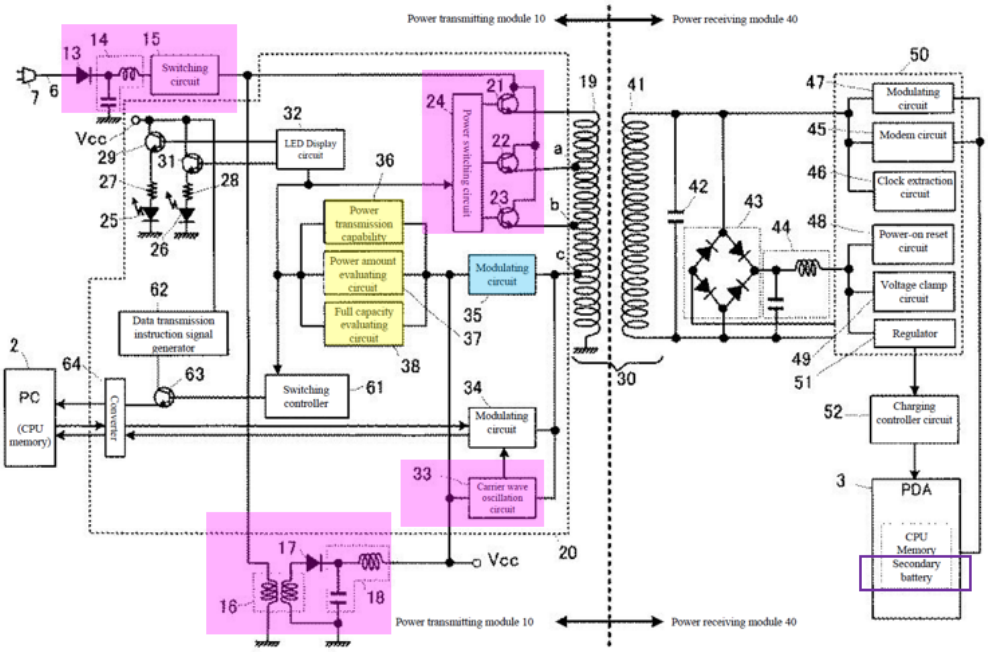

FIG. 7

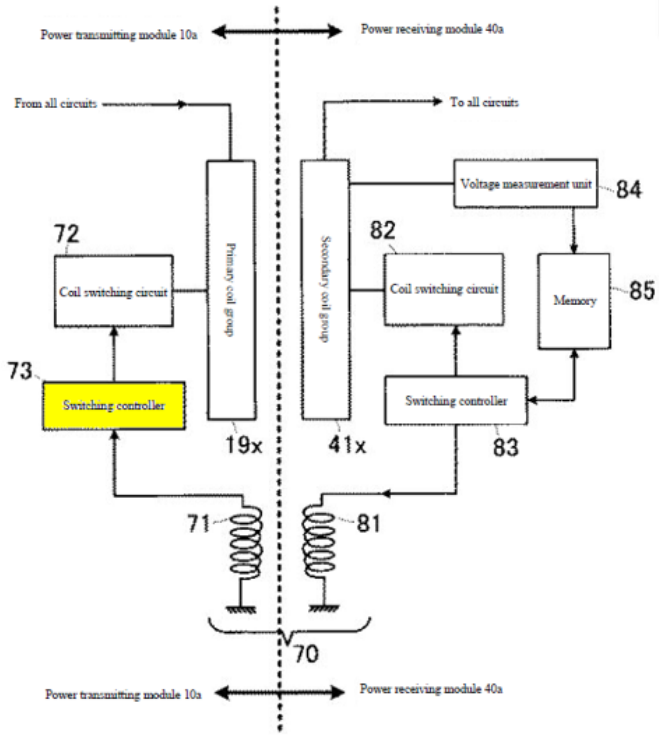

Such inter-relationships would have enabled the "**communication and control circuit**" implemented in the modified *Okada* system to perform various processes/functions discussed in limitations (g)-(n) discussed below. (Ex. 1002, ¶179; §§IX.A.1(f)-(k).) A POSITA would have been motivated to configure the above-identified "**communication and control circuit**" in the modified *Okada* system to, *e.g.*, process the current feedback information received from demodulator 35 (including as modified in view of *Kook*) for controlling the operating frequency of the modified "**drive circuit**" to control the voltage output of secondary rectification terminal during charging/powering operations, as explained. (§IX.A.1(c)(1); Ex. 1002, ¶179.)

Circuits 33, 36-38 may be "configured on the same **IC chip**," *e.g.*, "**IC** 20," which includes other components like "controller" 61, 73. (Ex. 1005, ¶¶0046, 0081-0084, FIGS. 2, 7.) Such circuitry would have been understood as compact integrated circuitry designed to perform/given certain operations in PTM10, which is consistent with a "**microcontroller**" as understood by a POSITA in the context of the '371 patent. (Ex. 1002, ¶180; Ex. 1001, 24:32-45, 39:33-38 (exemplifying an "IC" or "chip" as a "microcontroller").) The same is true where "switching controller 73" is part of such "**communication and control circuit**" since it sends "instructions" to control the switching to select specific primary coils. (Ex. 1005, ¶¶0095, 0101.)

To the extent it is argued/determined the claimed "microcontroller" requires a processor or the like, and *Okada* does not expressly disclose such features, it would have been obvious to configure PTM10 in the modified *Okada* system to include such features because it would have been a foreseeable application of known technologies/techniques to use in PTM10, which uses integrated circuit(s) to perform "control[ler]"-type operations. (*Supra*; Ex. 1002, ¶181; Ex. 1006, 5:65-6:59, FIGS. 4-5 (controller 40); Ex. 1024, 6:60-7:14 (inductive power source including "microprocessor controller 308" for controlling modes of power supply operation), FIG. 3.)

A POSITA would have appreciated implementing well-known processor-based microcontroller technology with PTM10 would have been an obvious

variation to how the module can perform similar functionalities, while providing known programmable functionalities. Indeed, *Kook* discloses "MPU block 30 for controlling internal elements" of charger 1 (§IX.A.1(c)(1); Ex. 1059, ¶0041), and a POSITA would have found it obvious to configure the modified *Okada* system to configure the components in the "communication and control circuit" of the modified *Okada* system with a microcontroller (or include a microcontroller to facilitate/work with such components and their associated functionalities), similar to how MPU block 30 operates in *Kook*. A POSITA would have had the skills and rationale to implement such a modification, and given the known technology and *Okada*'s teachings, would have done so with a reasonable expectation of success. (Ex. 1002, ¶181.)

f) detect, through the sense circuit, a received communication of information in the current modulation in the primary coil;

The *Okada-Odendaal-Shima-Hui-027-Kook* combination discloses/suggests this limitation. (Ex. 1002, ¶182.) For reasons explained for limitations 28(d)-28(e), one or more circuits 36/37/38 (part of the "**communication and control circuit**" in the modified *Okada* system) (§IX.A.1(e)) detects, through demodulator 35 ("**sense circuit**") sensing, a current-modulated response signal from PRM40 (including information corresponding to PDA3 (*e.g.*, device compatibility/capability, power level, and charge status information)) via coil 19 ("**a received communication of**

information in the current modulation in the primary coil") used to facilitate power/charge operations, like that described by *Okada*. (§§IX.A.1(d)-IX.A.1(e); *see also* §§IX.A.1(a)-IX.A.1(c); Ex. 1005, FIG. 3, ¶¶0056-0057, 0059-0077; Ex. 1002, ¶182.)

g) operate the drive circuit to inductively transfer sufficient power to the inductive receiver unit to activate and power the receiver circuit to enable the receiver circuit to communicate the information in the current modulation in the primary coil;

The *Okada-Odendaal-Shima-Hui-027-Kook* combination discloses/suggests this limitation. (Ex. 1002, ¶¶183-186.) As discussed, a POSITA would have been motivated to configure the modified *Okada* system to implement closed-loop feedback controlled frequency switching power delivery based on device information to provide appropriate power to PDA3's battery during power/charging operations. (§IX.A.1(c).) Indeed, as explained (limitations 28(b)-28(f)), the communication/control circuit (*e.g.*, circuit(s) 36/37/38 (and optionally others) including as modified) in the modified *Okada* system would have operated the "**drive circuit**" (§§IX.A.1(c)-IX.A.1(f), *e.g.,* with modified switching circuit 15 and *e.g.,* circuits 16-18, 21-24, 33) by *e.g.*, to provide control signal(s) to circuit 24 for selecting a switch 21/22/23 at the **onset** of a charging process, and/or by controlling power transmission based on received/demodulated current feedback information to control the operation frequency of the "**drive circuit**" (*supra*) **during** the charging

process in the modified system to inductively transfer power, via coils 19 and 41, to PRM40 ("**inductive receiver unit**") of PDA3 (the "communication and control circuit…configured to" "**operate the drive circuit to inductively transfer sufficient power to the inductive receiver unit**"), consistent with that disclosed/suggested by *Okada-Odendaal-Kook*. (*Infra*; §§IX.A.1(a), 1(c)-1(g); Ex. 1005, ¶¶0040, 0047, 0051, 0057, 0069-0073; Ex. 1002, ¶183.)

For reasons explained, a POSITA would have been motivated to configure the modified *Okada* system to inductively transfer "**sufficient**" power to the "**inductive receiver unit**" (§IX.A.1(a)) to "**activate and power the receiver circuit to enable the receiver circuit to communicate the information in the current modulation in the primary coil**," consistent with the teachings of *Okada* as modified above. (§§IX.A.1(a)-(f); Ex. 1002, ¶184.) For instance, *Okada* discloses that circuit 15's switching signal is converted to a V_{CC} to power components in PTM10, including circuit 33, which generates "a prescribed carrier wave at a certain interval" that is sent to PRM40. (Ex. 1005, ¶¶0039, 0056-0057; §IX.A.1(c)(1).) A DC signal "generated by a carrier wave provided by the carrier wave oscillating circuit 33 can be **used as a driving power source for the clock extracting circuit 46 and the modulating circuit 47**" in the "**receiver circuit**" of PRM40 ("**activate and power the receiver circuit**," as claimed). (Ex. 1005, ¶0058; §IX.A.1(a).)

Such an "activat[tion] and power[ing]" of the "receiver circuit" (including *e.g.*, modulator 47 (§IX.A.1(a))) in the modified *Okada* system causes the "receiver circuit" to provide responsive device information that is received/processed by demodulator 35 (§IX.A.1(e)) based on current modulation in primary coil 19 (§IX.A.1(d)) ("operate the drive circuit (§IX.A.1(c)(1))…**to activate and power the receiver circuit to enable the receiver circuit to communicate the information in the current modulation in the primary coil**"). (Ex. 1002, ¶185.)

Consistent with *Okada*, in the above-discussed modified *Okada* system (*e.g.*, §§IX.A.1(b)-(IX.A.1(f))) circuits 36/37/38 (part of "**communication and control circuit**") controls the operating frequency of the modified switching circuit 15, which provides power to drive oscillating circuit 33 via circuits 16-18 (all part of "**drive circuit**" §IX.A.1(c); Ex. 1005, ¶0060-0064.) Thus, after power/charge operations have begun, circuit 33 (part of "**drive circuit**") in the modified system would generate/transmit, via coil 19, the carrier wave that is used to "**activate and power**" components in PRM40 (including "**receiver circuit**") to enable the "**receiver circuit**" (§IX.A.1(a)) to generate/communicate the responsive device information that is transmitted back to PTM10 via coils 41 and 19 based on current modulation techniques/technologies as explained (§IX.A.1(d)) and the closed feedback loop power transfer operations taught/suggested by *Okada-Kook*. (Ex.

1005, FIG. 3, ¶¶0062-0064, 0074-0090; Ex. 1059, ¶¶0033, 0041, 0083; §§IX.A.1(a)-(g); Ex. 1002, ¶186.)

> **h) from the information communicated by the receiver circuit, determine a power parameter; and**
>
> **i) operate the drive circuit according to the power parameter to provide power inductively from the primary coil to the receiver coil to power the microcontroller and to charge the battery of the portable device,**[10]

The *Okada-Odendaal-Shima-Hui-027-Kook* combination discloses/suggests limitations 28(h) and 28(i). (Ex. 1002, ¶¶187-194.)

Consistent with *Okada*, in the above-discussed modified *Okada* system/device, PTM10 would have received the device information from the "receiver circuit" of PRM40, *e.g.*, "power consumption information," which would have been provided to circuits 36/37/38 (part of "**communication and control**

[10] The '371 patent does not appear to disclose using power provided *from* the primary coil *to* the receiver coil "to power the microcontroller," which is included in the communication/control circuit of the "system." (§IX.A.1(e); Ex. 1001.) Ambiguity/indefiniteness issues aside, the modified *Okada* system as discussed below meets limitation 28(i) under the interpretation where "the microcontroller" refers to **(1) "a microcontroller" in the portable device**, or **(2) "the microcontroller" recited in limitation 28(e)**. (*See infra*.)

circuit") to determine the power transmission output, *e.g.*, determination of power transmission output in three levels: high, intermediate, and low ("**a power parameter**"). (§§IX.A.1(a)-(g); Ex. 1005, ¶¶0057, 0063-0064, 0069, FIG. 3; Ex. 1002, ¶188.) The determined/selected power would have been inductively provided from coil 19 to coil 41 and used by PRM40 to charge the PDA3 battery. (*Id.*; Ex. 1002, ¶188.)

Thus, for reasons discussed above, and for limitation 28(h) and others, a POSITA would have been motivated, and found obvious, to modify the *Okada-Odendaal-Shima-Hui-027-Kook* combination to "**operate**" the modified charger "system" (including the "**drive circuit**" (§IX.A.1(c))) according to the determined "**power parameter**" to "**provide power inductively from the primary coil to the receiver coil…to charge the battery of the portable device**," as claimed. (*Supra*; §§IX.A.1(a)-(g); Ex. 1002, ¶189.)

Moreover, **<u>under interpretation (1)</u>** (*supra* n.10), a POSITA would have found it obvious to configure the above modified *Okada* system such that the power provided from coil 19 to coil 41 (as discussed above) would "**power [a] microcontroller**" and the "battery" in PDA3, consistent with *Okada*'s teachings (as modified above). (*Supra*; §§IX.A.1(a)-(g); Ex. 1002, ¶190.)

Namely, where the recited "microcontroller" in limitation 28(i) is deemed to be different from the "microcontroller" recited in limitation 28(e) (given as claimed

the 28(i) "microcontroller" has to be powered from "power **inductively** from the primary coil to the receiver coil", whereas the 28(e) "microcontroller" is claimed to be in the communication/control circuit of the "system"). (§§IX.A.1(e), §IX.A.1(i) (above).) Under such an interpretation, a POSITA would have understood the modified *Okada* combination discloses such features. For instance, *Okada* explains circuits 46-47 (and circuits 45/48/49) (in PRM40) may be "configured on the same IC chip," *e.g.*, "power receiving control IC 50." (Ex. 1005, ¶¶0047-0048, 0057, 0063, 0086-0092, FIGS. 2, 7.) Such circuitry would have been understood as compact integrated circuitry designed to perform certain operations in PRM40, which is consistent with a "**microcontroller**" as understood by a POSITA and in context of the '371 patent. (Ex. 1002, ¶191; Ex. 1001, 24:32-45, 39:33-38 (exemplifying an "IC" or "chip" as a "microcontroller"); Ex. 1064, ¶0023 (describing a secondary-side module "[as] an *integrated circuit*, such as a *microprocessor*"); Ex. 1064, ¶0023.) Thus, the modified *Okada* combination discloses "**a microcontroller**" in the "**receiver unit**." (Ex. 1002, ¶191.) And for reasons explained, and consistent with *Okada*'s teachings, the power inductively provided from coil 19 to coil 41 is used to activate and power components in PRM40 (§IX.A.1(a)-(g)), and thus such "microcontroller" would likewise be powered by such received "power" as claimed/interpreted above. (Ex. 1002, ¶191.) Indeed, as *Okada* explains, after power/charge operations have begun, circuit 33 (part of "**drive**

circuit") in the modified system would generate/transmit, via coil 19, the carrier wave that is used to activate and power components in PRM40 (which includes such a "microcontroller") to enable its "**receiver circuit**" (§IX.A.1(a)) to generate/communicate the responsive device information that is transmitted back to PTM10 via coils 41 and 19, as explained (§IX.A.1(e)). (Ex. 1005, FIG. 3, ¶¶0062-0064, 0074-0090; Ex. 1002, ¶191.)

To the extent it is argued/determined the claimed "microcontroller" requires a processor or the like and *Okada* does not expressly disclose such features, it would have been obvious to configure PRM40 in the modified *Okada* system to include such features because it would have been a foreseeable application of known technologies/techniques in a portable device/system, which uses ICs to perform "control[ler]"-type operations, consistent with *Okada*. (Ex. 1002, ¶192; Ex. 1006, 5:65-6:59, FIGS. 4-5 (controller 40); Ex. 1024, 6:60-7:14 ("microprocessor controller 308" controlling power-supply operation/modes), FIG. 3; Ex. 1064, ¶0023.) A POSITA would have appreciated implementing well-known processor-based microcontroller technology with PRM40 would have been an obvious variation to how a PDA would perform similar/other functionalities, while providing known programmable functionalities. Thus, a POSITA would have found it obvious to configure the portable device in the modified *Okada* combination to include a "**microcontroller**" for controlling PRM40 components that is provided with power

via the inductive coupling between coils 19-41, where such power also charges PDA3's battery, as discussed above. (§§IX.A.1(a)-(g) and *supra* above (charging battery); Ex. 1002, ¶192.) A POSITA would have had the skills and rationale to implement such a modification, and given the known technology and *Okada*'s teachings, would have done so with a reasonable expectation of success. (Ex. 1002, ¶192.)

Under interpretation (2) (*supra* n.10), a POSITA would have found it obvious to configure the above modified *Okada* system such that the "**drive circuit**" operates according to the "**power parameter**" to "**provide power inductively from the primary coil to the receiver coil to power the microcontroller**" in PTM10/cradle 4 (§IX.A.1(e)), consistent with *Okada*'s teachings (as modified above). (*Supra*; §§IX.A.1(a)-(h); Ex. 1002, ¶193.)

Consistent with *Okada*'s teachings, for reasons explained (§§IX.A.1(a)-(g)), the modified *Okada* system (in light of *inter alia*, *Kook*) would have been configured to use device information provided by PRM40 to control/adjust power delivery in a closed-loop feedback fashion, where the modified switching circuit 15 and related components (part of "**drive circuit**") adjusts the signals used to drive coil 19 for transferring appropriate power to PDA3 during charging operations. (§IX.A.1(c).) Consistent with those operations, and with those of *Okada,* switching circuit in the modified system also provides signal(s) to circuits 16-18 to generate Vcc, which is

used to power components in PTM10 (which would include the "microcontroller" in the "communication and control circuit" in the modified system (§IX.A.1(e))). (Ex. 1005, FIG. 2, ¶¶0044, 0055, 0060-0062, 0108; Ex. 1002, ¶194.) As such, for reasons explained, a POSITA would have had similar rationale and skills to configure, and reasonable expectation of success in achieving, the above configuration/modification that would have predictably resulted in the "**drive circuit**" to operate according to the "**power parameter**" to "**provide power inductively from the primary coil to the receiver coil to power the microcontroller**" in PTM10/cradle 4, and charge PDA3's "**battery**" (as discussed above) (§§IX.A.1(a)-(g) and *supra* above (charging battery using inductively delivered power); Ex. 1002, ¶194.)

j) wherein to charge the battery of the portable device the communication and control circuit is further configured to: receive additional information in the current modulation in the primary coil from modulation of the current in the receiver coil corresponding to a voltage or current at an output of the receiver circuit while charging the battery of the portable device; and

The *Okada-Odendaal-Shima-Hui-027-Kook* combination discloses/suggests this limitation. (Ex. 1002, ¶¶195-199.)

As discussed, consistent with *Okada*'s operations, a POSITA would have configured the modified *Okada* system such that the communicated information includes information **corresponding to a voltage/current** induced by the first

primary coil **at the output of the receiver circuit** (§IX.A.1(a)) that would have been communicated to circuits 36-38 ("**communication and control circuit**") (§IX.A.1(e)) for closed-loop feedback control of power delivery for charging PDA3's battery (§IX.A.1(c)), where such information would have been detected in the **current modulation** in primary coil 19 from the **current modulated** in **receiver coil** 41 (§§IX.A.1(d)-IX.A.1(g); Ex. 1002, ¶196.) Indeed, such features would have been consistent with those described by *Okada* and *Kook*. (§§IX.A.1(d)-IX.A.1(g); *see also* Ex. 1059, ¶0041 (describing how current sensing block 60 "stably control[s] an electric power through a current feedback using an automatic variation algorithm of primary frequency…to control a voltage of a secondary rectification terminal in the charging battery-pack 200" (*e.g.*, additional information corresponding to a receiver circuit output while charging a portable device battery)), 0047, 0054, 0071, 0083; §IX.A.1(c); Ex. 1002, ¶196.)

Moreover, as explained, *Okada* discloses continuously providing device information after the onset of power transfer operations (receiving additional information "**while charging the battery of the portable device**"). (Ex. 1005, ¶¶0074-0090, FIG. 3; §§IX.A.1(f)-1(i).) Further, *Kook* discloses that "a voltage of the secondary rectification terminal in [the battery/device] is controlled to a **constant voltage**" via coils 70/80 by "using an automatic variation algorithm of primary frequency of the non-contact charger 1." (Ex. 1059, ¶0047; *id.*, ¶0041 (current

sensing block 60 "**stably controlling**" power "through a current feedback using an automatic variation algorithm of primary frequency"); Ex. 1002, ¶197.)

Thus, consistent with the above-discussed modified *Okada* system in light of, *inter alia Kook* (§IX.A.1(c)), and for similar reasons, a POSITA would have been motivated, and found obvious to configure the "**communication and control circuit**" (§IX.A.1(e)) in the *Okada-Odendaal-Shima-Hui-027-Kook* system (§§IX.A.1(c)-IX.A.1(i)) to continuously "**receive additional information**" (*e.g.*, information corresponding to a voltage/current induced by coil 19 at the output of the "receiver circuit") "**while charging the battery of the portable device**" in order to "stably control[]" an output voltage to "a constant voltage," thus allowing the charger system to adjust its operation, and thus the transmitted power (similar to that taught/suggested by *Kook* and *Okada* and explained above (§IX.A.1(c))). (Ex. 1002, ¶198.) Such a modification/implementation would have ensured the modified system continuously receives PDA3 information (*e.g.*, including voltage or current at output of receiver circuit, which is associated with the voltage/current used to power the load (battery)) so adjustments can be made according to the closed feedback loop processes consistent with the *Okada-Kook* combined teachings. (§IX.A.1(c); Ex. 1002, ¶199.) Given the above modified system would have been configured to communicate such information using current modulation/demodulation techniques/components for reasons explained

(§§IX.A.1(d)-(i)), such "additional information" would have been received "**in the current modulation in the primary coil** [19] **from the modulation of the current in the receiver coil** [41]" like that claimed. (Ex. 1002, ¶199.)

> **k) regulate in a closed loop feedback manner, the voltage or current at the output of the receiver circuit in accordance with the received additional information corresponding to the voltage or current at the output of the receiver circuit by adjusting at least one of the operating frequency, the duty cycle, and the DC voltage input to the drive circuit during charging of the battery of the portable device.**

The *Okada-Odendaal-Shima-Hui-027-Kook* combination discloses/suggests this limitation for reasons explained. (Ex. 1002, ¶200; §§IX.A.1(a)-(j).) As discussed for limitations 28(c)-(j), the *Okada-Odendaal-Shima-Hui-027-Kook* system would have been configured to perform a closed loop feedback process (§IX.A.1(c)) to stably control, using current feedback, the portable device's rectification terminal voltage (provided as output of receiver circuit (§IX.A.1(a)) used to charge PDA3's battery) ("**regulate in a closed loop feedback manner, the voltage or current at the output of the receiver circuit**"). (§§IX.A.1(c)-IX.A.1(j); Ex. 1002, ¶200.) For similar reasons explained above, such features would have been provided in accordance with the current feedback information continuously received during operation ("**the received additional information corresponding to the voltage or current at the output of the receiver circuit**") (§§IX.A.1(j)) by varying the "**operating frequency**" of the primary-side circuit (via, *inter alia*,

modified switching circuit 15 (part of "**drive circuit**")) (§IX.A.1(c)) while transferring power to charge PDA3's battery (§§IX.A.1(d)-IX.A.1(j)) ("**during charging of the battery of the portable device**"). (*See also* §§IX.A.1(a)-(c), §§IX.A.1(i)-(j); Ex. 1002, ¶200.)

B. Ground 2: Claim 29 is obvious over *Okada* in view of *Odendaal*, *Shima*, *Hui-027*, *Kook*, and *Kazutoshi*

1. Claim 29

a) The system of claim 28, wherein: the sense circuit includes a low pass filter and an amplifier; and

The *Okada-Odendaal-Shima-Hui-027-Kook* combination discloses/suggests this limitation. (Ex. 1002, ¶¶201-206.)

While *Okada* does not expressly disclose the sense circuit including a low pass filter and amplifier, it would have been obvious to configure the above modified *Okada* system (§IX.A.1) to implement such features in view of the additional teachings in *Kook*. (Ex. 1002, ¶202.)

In addition to that discussed above, (§IX.A.1), *Kook* discloses that charger 1 includes **current sensing block 60** (blue in FIG. 1 below) that **monitors primary coil 70** to receive signals and associated information. (Ex. 1059, ¶¶0008, 0010, 0032-0033, 0041 ("a current sensing block 60 for stably controlling an electric power through a current feedback"), 0045 ("current sensing block 60 receives a signal"); Ex. 1002, ¶203.)

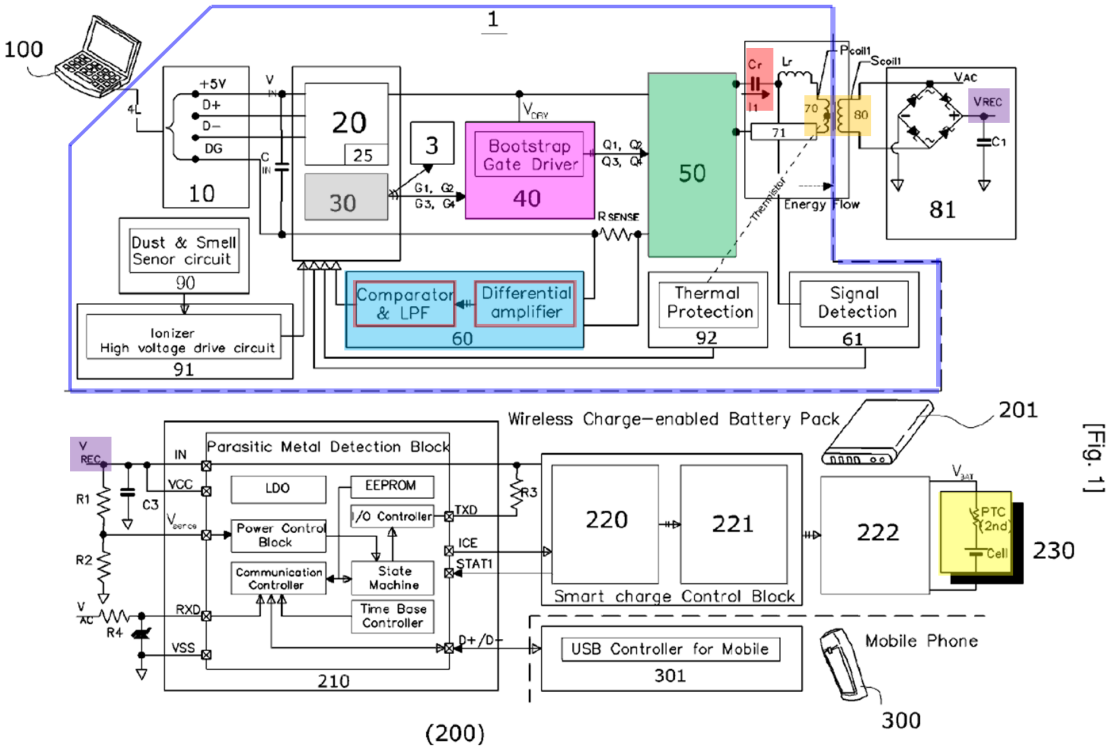

[Fig. 1]

Current sensing block 60 includes a differential "**amplifier**" and a "LPF" ("**Low Pass Filter**" (red above)). A POSITA would have understood that that the "LPF" and "amplifier" would have improved the sensing/detecting of a signal as well as amplifying such a signal from a primary coil (similar to that described by) because it was known that an amplifier increases signal strength and a LPF reduces impacts of unwanted noise/distortion for optimizing signal detection/sensing. (Ex. 1002, ¶204.)

In light of such teachings/knowledge, and further to rationale explained for claim 28, a POSITA would have been motivated to configure the "**sense circuit**" in the modified *Okada* system (*e.g.*, demodulating circuit 35 (§IX.A.1(d))) to include

amplifier/LPF circuitry ("**a low pass filter and an amplifier**") to provide similar features like that suggested by *Kook*'s current sensing block 60 (*e.g.*, to amplify and filter the signal received by circuit 35 to ensure proper/efficient demodulation of the current modulated information signal(s) sent by coil 41 in the receiver circuit). (Ex. 1002, ¶205.)

A POSITA would have had the requisite skills and rationale to design/implement such features in the above modified *Okada* system, and done so with a reasonable expectation of success given the teachings of *Okada* and *Kook* in context of a POSITA's state-of-art knowledge at the time. (Ex. 1002, ¶206.) Especially since such modification would have involved applying known technologies/techniques (e.g., known signal enhancement/processing and filter technologies/techniques) to predictably yield an inductive power transfer system having an optimized/improved sense circuit (through the use of known LPF and amplifier components/techniques (*Kook*)) for monitoring current flow through the primary coil in accordance with the above-modified *Okada-Odendaal-Shima-Hui-027-Kook* system. (*See supra* for this limitation 28(d); §IX.A.1(d); Ex. 1002, ¶206.) *KSR*, 550 at 416.

b) the closed loop feedback manner comprises a Proportional-Integral-Derivative (PID) control technique for regulating the voltage or current at the output of the receiver circuit.

Okada-Odendaal-Shima-Hui-027-Kook in view of *Kazutoshi* discloses/suggests this limitation. (Ex. 1002, ¶¶207-213; §IX.A.1.)

As discussed for limitation 28(k), the **communication/control circuit** in the modified *Okada* system (§IX.A.1(e)) would have been configured to regulate in a "**closed loop feedback manner**" the voltage/current at the receiver circuit output (§IX.A.1(k).) To the extent that the *Okada-Odendaal-Shima-Hui-027-Kook* combination does not expressly disclose that such a closed loop feedback process/techniques comprises "**a…(PID) control technique**," a POSITA would have found it obvious to implement such features in view of *Kazutoshi*. (Ex. 1002, ¶208.)

Kazutoshi discloses "[a] contactless power supply system" with a power supply device 21 providing power to portable object (cart 3). (Ex. 1034, Abstract, FIG. 1, ¶¶0001, 0005-0014, 0024-0030.) Power supply device 21 may provide power through inductive wires 19, where power is induced on a signal pickup coil 20A used to operate a load (motor 15) in the portable object. (Ex. 1034, FIG. 3 (below), ¶0029.)

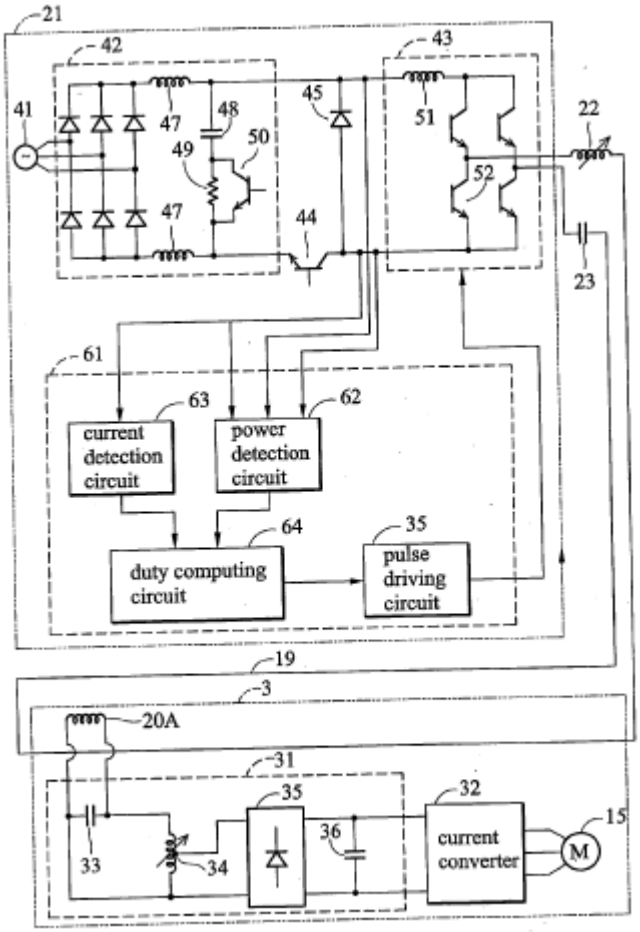

FIG. 3

Device 21 includes controller 61 having power detection circuit 62, current detection circuit 63, duty computing circuit 64, and pulse driving circuit 65. (*Id.*, ¶0038.) Duty computing circuit 64 receives signals (associated with the output of current converter 42 and current alternator 43, and output power of inductive wires 19) from power detection circuit 62 and current detection circuit 63. (*Id.*) Circuit 64 "employs the output current of the current detection circuit 63 as a reference, evaluates the duty of the square wave driving the transistor 52 in the current alternator 43," and provide an output signal to pulse generating circuit 65 to drive

transistor 52 and inductive 19 in order to power cart 3. (*Id.* ¶¶0038, 0043.) (Ex. 1002, ¶¶101-104, 209.)

Kazutoshi is in the same technical field as *Okada* (including as modified) and the '371 patent, and also discloses features that were reasonably pertinent to one or more particular problems the inventor for the '371 patent was trying to solve. (§§IX.A.1(a)-IX.A.1(b); Ex. 1001, Abstract, 3:55-5:17, 33:39-35:3; Ex. 1034, Abstract, ¶¶0029, 0036-0039; Ex. 1002, ¶210.) Therefore, a POSITA would have considered *Kazutoshi* in context of modified *Okada* apparatus, looking to design/implement an inductive charging system like that described by the modified *Okada* apparatus. (Ex. 1002, ¶210; §IX.A.1.)

Kazutoshi additionally discloses duty computing circuit 64 comprises other components (*e.g.,* 71-76), where "[t]he multiplier 72, the integrator 73, and the differentiator 74 make up a ***proportional integral derivative (PID)*** controller." (Ex. 1034, ¶0039.) In operation, the controller uses the difference between the output current (current detection circuit 63) and a reference value to determine an output signal to pulse generating circuit 65 for driving transistor 52 and inductive wires 19 to inductively power cart 3. (*Id.*; *id.*, ¶¶0040-0043.) The PID controller provides "an output voltage for load resistance R and an output current within the range of the reference current." (*Id.*, ¶0043; *id.*, ¶0044; Ex. 1002, ¶211.)

In light of such teachings/suggestions, a POSITA would have been motivated and found obvious to configure the **communication/control circuit** in the modified *Okada* combination (§§IX.A.1(c), IX.A.1(k)) to use a PID control technique to regulate one or more outputs of the one or more receiver rectifier circuits (similar to features described by *Kazutoshi*) for regulating the receiver circuit output. (§IX.A.1(k); Ex. 1002, ¶212.) A POSITA would have recognized/appreciated the known use of PID control techniques/technologies in a controller of a powering/charging system and to regulate a rectified/output DC voltage, as demonstrated by *Kazutoshi* and known in the art. (Ex. 1002, ¶212; Ex. 1044, ¶¶0031, 0078; Ex. 1046, ¶0073 ("Persons of ordinary skill in the art will be aware that many different algorithms may be employed to enable the aforementioned tuning of the device. For example…the algorithm may implement PID (proportional, integral, differential) processing").)

A POSITA would have had the skill and rationale in implementing, and reasonable expectation of success in achieving, such modification. (Ex. 1002, ¶213.) Especially where it would have involved applying known technologies (PID control technologies) (*Kazutoshi* and state-of-art knowledge) with wireless power transfer/charging systems (*Okada-Odendaal-Shima-Hui-027-Kook*) according to known techniques (e.g., regulating an output signal of a powering/charging system) to yield the predictable result of providing an inductive power/charging system with

a regulated current/voltage output signal at the receiver circuit, consistent with the features of the modified *Okada* combination discussed above. (*Id.*, ¶213; §IX.A.1.) *KSR* at 416-18.

X. DISCRETIONARY DENIAL IS NOT APPROPRIATE

Discretionary denial under Section 325(d) is not appropriate here given the prior art combinations/arguments raised during prosecution are not the same/substantially similar to the presented grounds. For instance, the Office did not consider *Okada* in light of the other asserted prior art herein. (Ex. 1004; Ex. 1001, Cover.) *Okada* discloses/suggests many of the claimed features, and thus is relevant to the patentability of the challenged claim(s), especially when considered in context of the asserted obviousness positions. (§IX.) The examiner also did not have the benefit of expert testimony to support such teachings/suggestions as presented here. (Ex. 1002.) Thus, the examiner erred in allowing the claims without considering the teachings/suggestions in the prior art relied on in this Petition (*see* §IX). (Ex. 1004, 729-737.) Had the examiner done so, the challenged claims would have likely not have issued.[11]

This is true despite the issued patent from *Hui-027* (Ex. 1068) (and other patent references by "Hui"), a Korean version (KR-100836634) of *Kook* (Ex. 1059), and a published application with *Okada* as a co-inventor (Ex. 1019) having some overlapping subject matter were cited during prosecution. (Ex. 1001, Cover; Exs.

[11] Petitioner reserves the right to seek leave to respond to any §325(d) (and §314) arguments PO may raise to avoid institution.

1004, 1019, 1068, 1059.) As with other submitted references, the examiner erred in a manner pertinent to the patentability of the challenged claims by failing to consider and apply the similar teachings by each of *Okada*, *Hui-027* and *Kook* alone or in combination with other prior art. Indeed, as mentioned, *Okada* discloses many claimed features (alone and in combination with other asserted art), such as *Hui-027* that at least discloses conventional features recited in limitation 28(b) and *Kook*, which at least discloses features recited in limitation 28(c). Such teachings should have been considered, especially in combination with other pertinent references (asserted herein). (§IX.A.) The examiner erred by not substantively considering and applying such collective teachings to demonstrate obviousness of the challenged claims, which recite a compilation of conventional features. (*Id.*)

Furthermore, an evaluation of the factors under *Apple Inc. v. Fintiv, Inc.*, IPR2020-00019, Paper 11 (Mar. 20, 2020) (precedential), favors institution.

The **first factor** (stay) is neutral, because Samsung has not yet moved for a stay. *See Hulu LLC v. SITO Mobile R&D IP, LLC et al.*, IPR2021-00298, Paper 11 at 10-11 (P.T.A.B. May 19, 2021).

The **second factor** (proximity) is neutral. "The PTAB will weigh this factor against exercising discretion to deny institution under *Fintiv* if the median time-to-trial is around the same time or after the projected statutory deadline for the PTAB's final written decision" (FWD). (Ex. 1051, 9.) The median time from filing to trial

in the Eastern District of Texas is 19 months, meaning trial will be *no earlier* than May 2024 (Ex. 1052, 35), is close to the court's scheduled jury selection for August 5, 2024 (Ex. 1053, 1.) With this petition filed in June 2023, a FWD may be expected by December 2024, not long after the trial date.

That the FWD may come after the trial date is not dispositive. The Board has granted institution in cases where the FWD issued months after the scheduled trial date. The Board has relied on various justifications, such as diligence in filing the petition, a stipulation not to pursue the asserted grounds in litigation, minimal investment in litigation, and the merits of the invalidity challenge were strong. *Verizon Business Network Services, Inc. v. Huawei Techs. Co*., IPR2020-01141, Paper 12 (Jan. 14, 2021). The same factors are present in this case. For instance, Petitioner diligently filed this petition (challenging long, convoluted claims) in advance of the one-year bar date and within four months of PO's infringement contentions in the Texas Litigation. (Exs. 1018, 1022.) Fact discovery is not anticipated to close until March 18, 2024. (Ex. 1053, 3.) Expert discovery has not yet started. (*Id.*) And the *Markman* hearing has been scheduled for February 6, 2024, after the filing of this petition. (*Id.*)

The **third factor** (investment) also weighs against denial. The district court case is in the early stages. Fact discovery is in its infancy and the parties have not

engaged in expert discovery. (Ex. 1053, 3.) The parties have not yet identified terms for construction. (*Id.*, 4-6.) Nor have there been any substantive orders in this case.

The **fourth factor** (overlap) also weighs against denial. Petitioner hereby stipulates that, if the IPR is instituted, Petitioner will not pursue the IPR grounds in the district court litigation. Thus, "[i]nstituting trial here serves overall system efficiency and integrity goals by not duplicating efforts and by resolving materially different patentability issues." *Apple, Inc. v. SEVEN Networks, LLC*, IPR2020-00156, Paper 10 at 19 (P.T.A.B. June 15, 2020); *see also Sand Revolution II, LLC v. Continental Intermodal Group-Trucking LLC*, IPR2019-01393, Paper 24 at 12 (P.T.A.B. June 16, 2020).

While the **fifth factor** (parties) may weigh slightly in favor of denial, because the Petitioner and PO are the same parties as in district court, based on a "holistic view," the factors favor institution. *Samsung Elecs. Co. Ltd. v. Dynamics Inc.*, IPR2020-00505, Paper 11 at 15 (P.T.A.B. Aug. 12, 2020).

Further, the Board should not discretionarily deny institution, because this petition presents compelling merits. *See Commscope Tech. LLC v. Dali Wireless, Inc.*, IPR2022-01242, Paper 23 at 4-5 (P.T.A.B. Feb. 27, 2023) (precedential). As demonstrated above, the claimed features are a compilation of technologies/techniques known to be used in inductive power/charge systems. (§IX) Moreover, this Petition is the ***sole*** challenge to the identified challenged claims

before the Board—a "crucial fact" favoring institution. *Google LLC v. Uniloc 2017 LLC*, IPR2020-00115, Paper 10 at 6 (May 12, 2020).

XI. CONCLUSION

Accordingly, Petitioner requests institution of IPR for the challenged claims based on the specified grounds.

Respectfully submitted,

Dated: June 30, 2023

By: /Joseph E. Palys/
Joseph E. Palys (Reg. No. 46,508)
Counsel for Petitioner

CERTIFICATE OF COMPLIANCE

Pursuant to 37 C.F.R. § 42.24(d), the undersigned certifies that the foregoing Petition for *Inter Partes* Review of U.S. Patent No. 11,316,371 contains, as measured by the word-processing system used to prepare this paper, 12,933 words. This word count does not include the items excluded by 37 C.F.R. § 42.24 as not counting towards the word limit.

Respectfully submitted,

Dated: June 30, 2023

By: /Joseph E. Palys/
Joseph E. Palys (Reg. No. 46,508)
Counsel for Petitioner

CERTIFICATE OF SERVICE

I hereby certify that on June 30, 2023, I caused a true and correct copy of the foregoing Petition for *Inter Partes* Review of U.S. Patent No. 11,316,371 and supporting exhibits to be served via express mail on the Patent Owner at the following correspondence address of record as listed on Patent Center:

115007 – NK Patent Law
4101 Lake Boone Trail
Suite 218
Raleigh, NC 27607

By: /Joseph E. Palys/
Joseph E. Palys (Reg. No. 46,508)