UNITED STATES PATENT AND TRADEMARK OFFICE

BEFORE THE PATENT TRIAL AND APPEAL BOARD

SAMSUNG ELECTRONICS CO., LTD.
Petitioner

v.

MOJO MOBILITY INC.
Patent Owner

Patent No. 11,462,942

PETITION FOR *INTER PARTES* REVIEW
OF U.S. PATENT NO. 11,462,942

TABLE OF CONTENTS

I. INTRODUCTION 1

II. MANDATORY NOTICES 1

III. PAYMENT OF FEES 2

IV. GROUNDS FOR STANDING 2

V. PRECISE RELIEF REQUESTED AND GROUNDS 2

VI. LEVEL OF ORDINARY SKILL 4

VII. THE '942 PATENT 4

VIII. CLAIM CONSTRUCTION 5

IX. DETAILED EXPLANATION OF GROUNDS 6

A. Ground 1: Claims 1 and 8 are obvious over *Okada*, *Odendaal*, and *Kook* 6

1. Claim 1 6

2. Claim 8 55

B. Ground 2: Claim 2 is obvious over *Okada*, *Odendaal*, *Kook*, *Kazutoshi*, *Calhoon*, and *Black* 58

1. Claim 2 58

C. Ground 3: Claim 5 is obvious over *Okada*, *Odendaal*, *Kook*, and *Masias* 70

1. Claim 5 70

D. Ground 4: Claim 12 is unpatentable under § 103(a) as being obvious over *Okada*, *Odendaal*, *Kook*, *Takagi*, *Masias*, and *Kazutoshi* 77

1. Claim 12 77

X. DISCRETIONARY DENIAL IS NOT APPROPRIATE 87

XI. CONCLUSION.....92

XII. APPENDIX A (CLAIM LISTING) 93

LIST OF EXHIBITS

Ex.1001	U.S. Patent No. 11,462,942
Ex.1002	Declaration of R. Jacob Baker, Ph.D., P.E.
Ex.1003	Curriculum Vitae of R. Jacob Baker, Ph.D., P.E.
Ex.1004	Prosecution History of U.S. Patent No. 11,462,942
Ex.1005	Translation of Japanese Patent Application Publication No. 2006-141170A ("*Okada*")[1]
Ex.1006	U.S. Patent No. 6,912,137 ("*Berghegger*")
Ex.1007	U.S. Patent Application Publication No. 2006/0145660A1 ("*Black*")
Ex.1008	U.S. Patent No. 6,960,968 ("*Odendaal*")
Ex.1009	U.S. Patent No. 6,489,745 ("*Koreis*")
Ex.1010	U.S. Patent No. 6,366,817 ("*Kung*")
Ex.1011	Physics, Henry Semat et al., Rinehart & Co., Inc., 1958, Chapters 29-32 ("*Semat*")
Ex.1012	U.S. Patent No. 5,702,431 ("*Wang*")
Ex.1013	International Patent Application Publication No. WO1996040367 ("*WangII*")
Ex.1014	Handbook of Radio and Wireless Technology, Stan Gibilisco, McGraw-Hill, 1999 ("*Gibilisco*")
Ex.1015	U.S. Patent No. 4,942,352 ("*Sano*")

[1] Exhibit 1005 includes the original Japanese version and a certified English translation. Citations to *Okada* are to the English translation.

Ex.1016	Fundamentals of Electric Circuits, 2d., Charles Alexander et al., McGraw-Hill, 2004 ("*Alexander*")
Ex.1017	International Patent Application Publication No. WO1994/18683 ("*Koehler*")
Ex.1018	Mojo Mobility's Infringement Chart for U.S. Patent No. 11,462,942 (Ex. 5) accompanying Mojo Mobility's Infringement Contentions in *Mojo Mobility Inc. v. Samsung Elecs. Co., Ltd.*, No. 2:22-cv-00398 (E.D. Tx.) (February 28, 2023)
Ex.1019	U.S. Patent Application Publication No. 2005/0068019 ("*Nakamura*")
Ex.1020	U.S. Patent Application Publication No. 2007/0109708 ("*Hussman*")
Ex.1021	U.S. Patent Application Publication No. 2003/0210106 ("*Cheng*")
Ex.1022	Mojo Mobility's Infringement Contentions in *Mojo Mobility Inc. v. Samsung Elecs. Co., Ltd.*, No. 2:22-cv-00398 (E.D. Tx.) (February 28, 2023)
Ex.1023	U.S. Patent Application Publication No. 2004/0201988 ("*Allen*")
Ex.1024	U.S. Patent No. 7,378,817 ("*Calhoon-817*")
Ex.1025	International Patent Application Publication No. WO2003/096361 ("*Cheng*")
Ex.1026	International Patent Application Publication No. WO2004/038888 ("*ChengII*")
Ex.1027	Spiral Inductor Design for Quality Factor, Sang-Gug Lee et al., Journal of Semiconductor Technology and Science, Vol. 2. No. 1, March 2002 ("*Lee*")
Ex.1028	U.S. Patent Application Publication No. 2001/0055207 ("*Barbeau*")
Ex.1029	AN710 Antenna Circuit Design for RFID Applications
Ex.1030	U.S. Patent No. 6,606,247 ("*Credelle*")

Ex.1031	U.S. Patent No. 7,339,353 ("*Masias*")
Ex.1032	RESERVED
Ex.1033	U.S. Patent Application Publication No. 2005/0134213A1 ("*Takagi*")
Ex.1034	U.S. Patent Application Publication No. 2005/0135129A1 ("*Kazutoshi*")
Ex.1035	RESERVED
Ex.1036	International Patent Application Publication No. WO2003/105308A1 ("*Hui*")
Ex.1037	U.S. Patent No. 5,780,992 ("*Beard-1*")
Ex.1038	RESERVED
Ex.1039	U.S. Patent No. 5,631,539 ("*Beard-2*")
Ex.1040	RESERVED
Ex.1041	U.S. Patent Application Publication No. 2005/0127868A1 ("*Calhoon*")
Ex.1042	RESERVED
Ex.1043	U.S. Patent No. 7,791,311 ("*Sagoo*")
Ex.1044	U.S. Patent Application Publication No. 2007/0145830A1 ("*Lee-II*")
Ex.1045	RESERVED
Ex.1046	U.S. Patent Application Publication No. 2007/0026826A1 ("*Wilson*")
Ex.1047	U.S. Patent Application Publication No. 2006/0202665 ("*Hsu*")
Ex.1048	International Patent Application Publication No. WO2009155000A2 ("*Lin*")
Ex.1049	U.S. Patent Application Publication No. 2008/0067874 ("*Tseng*")
Ex.1050	U.S. Patent No. 9,356,473 ("*Ghovanloo*")

Ex.1051	Memorandum from Director Vidal (June 21, 2022)
Ex.1052	Federal Court Management Statistics (December 2022)
Ex.1053	Docket Control Order of March 28, 2023, *Mojo Mobility Inc. v. Samsung Elecs. Co., Ltd.*, No. 2:22-cv-00398 (E.D. Tex.)
Ex.1054	RESERVED
Ex.1055	RESERVED
Ex.1056	RESERVED
Ex.1057	RESERVED
Ex.1058	RESERVED
Ex.1059	U.S. Patent Application Publication No. 2009/0261778 ("*Kook*")
Ex.1060	RESERVED
Ex.1061	RESERVED
Ex.1062	RESERVED
Ex.1063	RESERVED
Ex.1064	RESERVED
Ex.1065	RESERVED
Ex.1066	RESERVED
Ex.1067	RESERVED
Ex.1068	RESERVED
Ex.1069	RESERVED
Ex.1070	RESERVED
Ex.1071	RESERVED

Ex.1072	RESERVED
Ex.1073	RESERVED
Ex.1074	RESERVED
Ex.1075	Watson, J., Mastering Electronics, Third Ed., McGraw-Hill, Inc. (1990) ("*Watson*")
Ex.1076	Sedra, A., *et al.*, Microelectronic Circuits, Fourth Ed., Oxford University Press (1998) ("*Sedra*")
Ex.1077	GB Patent Application Publication No. 2202414 ("*Logan*")
Ex.1078	U.S. Patent No. 7,226,442 ("*Sheppard*")

I. INTRODUCTION

Samsung Electronics Co., Ltd. ("Petitioner") requests *inter partes* review of claims 1, 2, 5, 8, and 12 ("challenged claims") of U.S. Patent No. 11,462,942 (Ex.1001) assigned to Mojo Mobility Inc. ("PO").

II. MANDATORY NOTICES

Real Parties-in-Interest: Petitioner identifies the following as the real parties-in-interest: Samsung Electronics Co., Ltd., and Samsung Electronics America, Inc.

Related Matter: The '942 patent is at issue in the following matter(s):

- *Mojo Mobility Inc. v. Samsung Electronics Co., Ltd.*, No. 2-22-cv-00398 (E.D. Tex.) (asserting the '942 patent and also U.S. Patent Nos. 9,577,440, 11,292,349, 11,201,500, 7,948,208, 11,342,777, and 11,316,371) ("Texas Litigation").
- Petitioner is filing concurrently herewith petitions for *inter partes* review challenging other claims of the '942 patent and petitions challenging parent U.S. Patent No. 11,316,371 (the '371 patent).

The '942 patent originates from U.S. Patent Application No. 17/728,502, filed on April 25, 2022, which is a continuation or continuation-in-part of a sequence of applications dated as early as Jan. 30, 2007. (Ex.1001, Cover.) The '942 patent also lists multiple provisional applications dated as early as Jan. 31, 2006. (*Id.*)

Counsel and Service Information: Lead counsel: Joseph E. Palys (Reg. No. 46,508), and Backup counsel are (1) Naveen Modi (Reg. No. 46,224), (2) Howard Herr (*pro hac vice* admission to be requested). Service information is Paul Hastings LLP, 2050 M St., Washington, D.C., 20036, Tel.: 202.551.1700, Fax: 202.551.1705, email: PH-Samsung-MojoMobility-IPR@paulhastings.com. Petitioner consents to electronic service.

III. PAYMENT OF FEES

The PTO is authorized to charge any fees due during this proceeding to Deposit Account No. 50-2613.

IV. GROUNDS FOR STANDING

Petitioner certifies that the ’942 patent is available for review and Petitioner is not barred or estopped from requesting review on the grounds identified herein.

V. PRECISE RELIEF REQUESTED AND GROUNDS

The challenged claims should be canceled as unpatentable based on the following grounds:

Ground 1: Claims 1 and 8 are unpatentable under 35 U.S.C. § 103(a) as obvious over *Odendaal* and *Kook*;

Ground 2: Claim 2 is obvious over *Okada*, *Odendaal*, *Kook*, *Kazutoshi*, *Calhoon*, and *Black*;

Ground 3: Claim 5 is obvious over *Okada*, *Odendaal*, *Kook*, and *Masias*; and

Ground 4: Claim 12 is obvious over *Okada*, *Odendaal*, *Kook*, *Takagi*, *Masias*, and *Kazutoshi*.

In Litigation, PO identified priority dates as possibly up to three months earlier than each of 7/30/2007 for claims 1 and 8, and 12/12/2007 for claims 2, 5, and 12. (Ex.1022, 6-8.) Without concession, Petitioner assumes those dates for this proceeding such that the prior art qualifies as follows:[2]

Okada (published: 6/1/2006)	§102(b)
Odendaal (filed: 6/26/2002; issued: 11/1/2005)	§§102(b), 102(e)
Kazutoshi (filed 12/03/2004; published 06/23/2005)	
Calhoon (filed: 12/12/2003; published 06/16/2005)	
Black (filed: 12/08/2005; published 7/6/2006)	
Takagi (filed: 11/4/2004; published 6/23/2005)	
Kook (filed: 10/25/2006; published: 10/22/2009)	§102(e)
Masias (filed: 5/10/2004; published: 3/4/2008)	

[2] *Infra* §X.

VI. LEVEL OF ORDINARY SKILL

A person of ordinary skill in the art as of the claimed priority date of the '942 patent ("POSITA") would have had at least a master's degree in electrical engineering, or a similar discipline, and two or more years of experience with wireless charging systems, including, for example, inductive power transfer systems. (Ex.1002, ¶¶20-21.)[3] More education can supplement practical experience and vice versa. (*Id.*)

VII. THE '942 PATENT

During prosecution, the claims went straight to allowance based on features associated with the claimed "communication and control circuit" and "regulate" features (Ex.1004, 562-573). However, the challenged claims are simply a compilation of conventional components/features disclosed/suggested by the prior art combinations herein. *In re Gorman*, 933 F.2d 982, 986 (Fed. Cir. 1991). (§IX; Ex.1002, ¶¶22-67, 70-270; Exs. 1005-1017, 1019-1021, 1023-1031, 1033-1034, 1036-1037, 1039, 1041, 1043-1044, 1046-1050, 1059, 1075-1078.)

[3] Petitioner submits the declaration of R. Jacob Baker, Ph.D., P.E. (Ex.1002), an expert in the field of the '942 patent. (Ex.1002, ¶¶1-13; Ex.1003.)

VIII. CLAIM CONSTRUCTION

For purposes of this proceeding, Petitioner believes that no special constructions, other than for the term identified below, are necessary to assess whether the challenged claims are unpatentable over the asserted prior art.[4] (Ex.1002, ¶¶68-69.) *Toyota Motor Corp. v. Cellport Systems, Inc.*, IPR2015-00633, Paper No. 11 at 16 (Aug. 14, 2015).

Claim 8 recites a "**means for <u>operating the multiple drive circuits to drive a selection of the multiple primary coils most magnetically aligned with the receiver coil to charge the portable device</u>**" (Ex.1001, 28:7-8), which lacks sufficient definite meaning for structure, and should be construed as a means-plus-function term. *Williamson v. Citrix Online, LLC*, 792 F.3d 1339, 1347-49 (Fed. Cir. 2015).

The identified function is <u>underlined</u> above. The corresponding structure encompasses that exemplified in the specification and/or equivalents thereof, including component(s), circuitry, etc. that provide selection of primary coil(s) consistent with the identified function (*e.g.,* Ex.1001, 45:8-47:52) (*e.g.,* controller

[4] Petitioner reserves all rights to raise claim construction and other arguments, including 35 U.S.C. §112 challenges, in district court. *Target Corp. v. Proxicom Wireless, LLC*, IPR2020-00904, Paper 11 at 11–13 (Nov. 10, 2020).

type component(s) (MCU1) or such component(s) and associated switching circuitry (MCU1, switches, etc.) or their equivalents (*see e.g., id.,* FIG. 37, 45:66-47:8, 46:39-40, 45:55-59). *Default Proof Credit Card Sys., Inc. v. Home Depot U.S.A., Inc.*, 412 F.3d 1291, 1298 (Fed. Cir. 2005).

IX. DETAILED EXPLANATION OF GROUNDS[5]

A. Ground 1: Claims 1 and 8 are obvious over *Okada*, *Odendaal*, and *Kook*

1. Claim 1

a) [1(a)] [6]

To the extent limiting, *Okada* (including as modified below) discloses this limitation. (Ex.1002, ¶¶71-85, 112-121; §§IX.A.1(b)-(m).) *Okada* discloses a "**system**" for inductively powering/charging portable devices, *e.g.*, mobile phones. (Ex.1005, Abstract, ¶¶0001, 0047.) FIG. 1 (annotated/below) shows power supply system 1 (blue) including PC2, PDA3 (green) ("**portable device**"), and cradle4 (red) ("**system**"). (Ex.1005, ¶¶0034-0036.) (Ex. 1002, ¶113.)

[5] References to non-asserted prior art demonstrate/support a POSITA's contemporaneous state-of-art knowledge.

[6] All claim language appears in the claim listing provided in Appendix A.

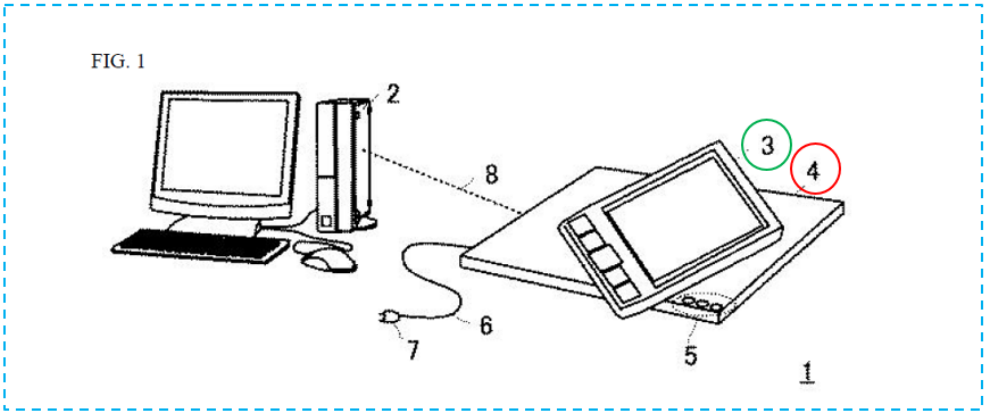

"[M]agnetic coupling" between cradle and PDA "induces voltage" in the "coil in the PDA" to "suppl[y] power to the PDA." (*Id.*, ¶0035.) (Ex.1002, ¶114.)

FIG. 2 (annotated/below) discloses circuitry/components in the charger system (cradle4) and portable device (PDA3). (Ex.1005, ¶¶0035, 0037.) Cradle4 includes **power transmitting module 10** ("PTM10") (also an example of a "**system**" (alone/collectively with cradle4)), and PDA3 includes **power receiving module 40** ("PRM40"). (*Id.*, ¶¶0035-0037, 0038-0058, FIG. 8, 0110-0111; Ex.1002, ¶115.)

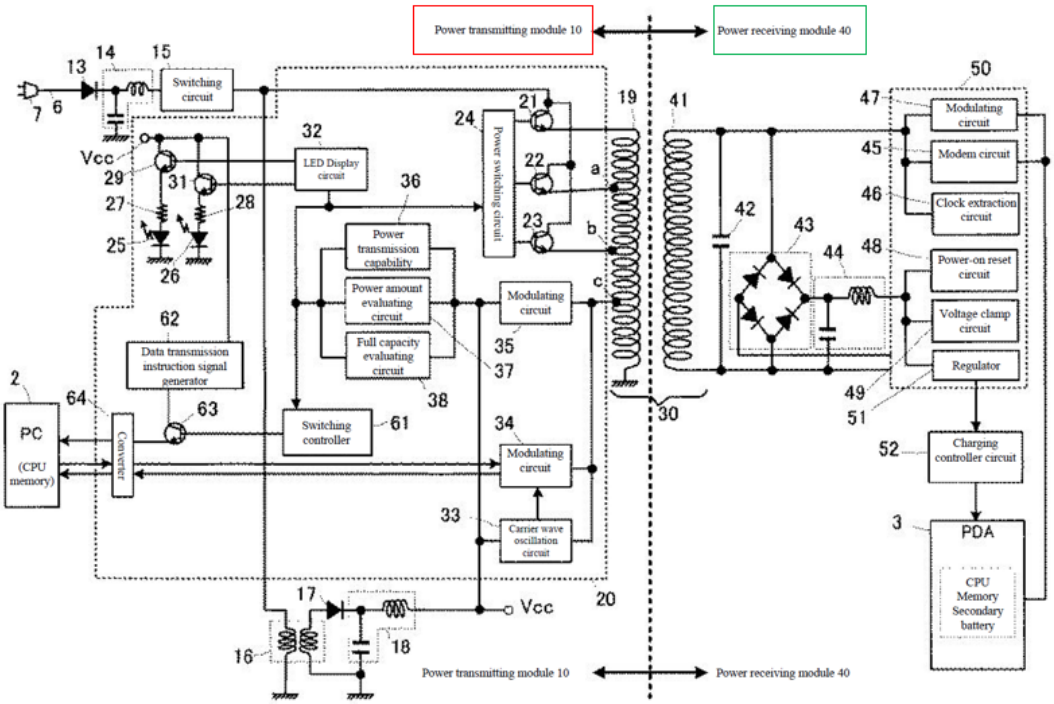

Circuits 13-14 of PTM10 convert received power to a DC signal used by switching circuit 15 to generate a switching pulse signal that is converted to a DC signal (V_{CC}) (via circuits 16-18) powering PTM10 components. (Ex.1005, ¶¶0038-0039, 0049.) The pulse signal is also supplied to primary coil 19 via switches 21/22/23. (*Id.*, ¶¶0040, 0049-0051.) Power switching circuit 24 selects/adjusts the power level transmitted to PRM40 (PDA3) using switches 21/22/23, which may be based on "power consumption information" provided by PRM40. (*Id.*, ¶¶0040, 0051, 0057, 0063-0064, 0069-0073; Ex.1002, ¶¶116-117.)

Okada discloses various configurations of the "system" providing similar functionalities associated with PTM10/PRM40, in connection with, *e.g.,* FIGS. 2, 7-17. (Ex.1005, ¶¶0009-0032, ¶¶0094-0096 (PTM10/PRM40 including multiple

coils), 0097-0154). Applications of these features are described with respect to other exemplary "system[s]." (Ex.1005, ¶¶0107, 0116-0132, FIGS. 9-13 (below); Ex.1002, ¶118.)

FIG. 9

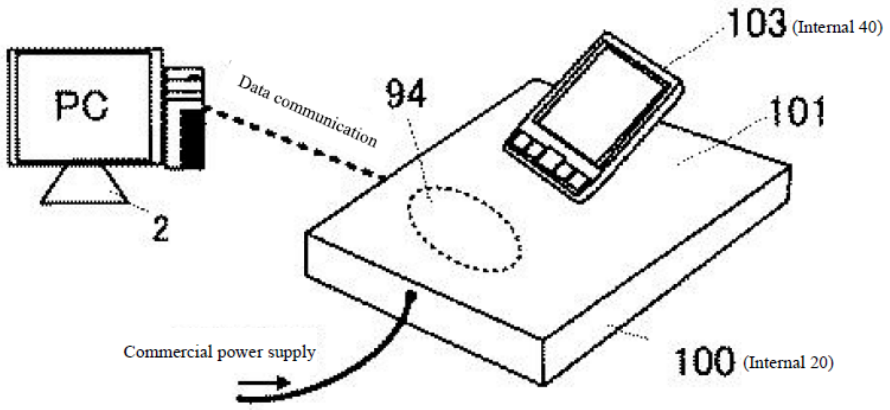

FIG. 10

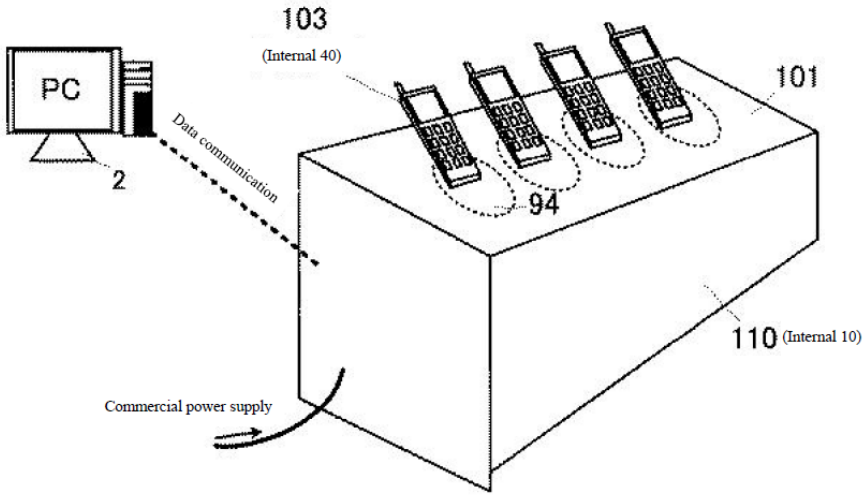

FIG. 11

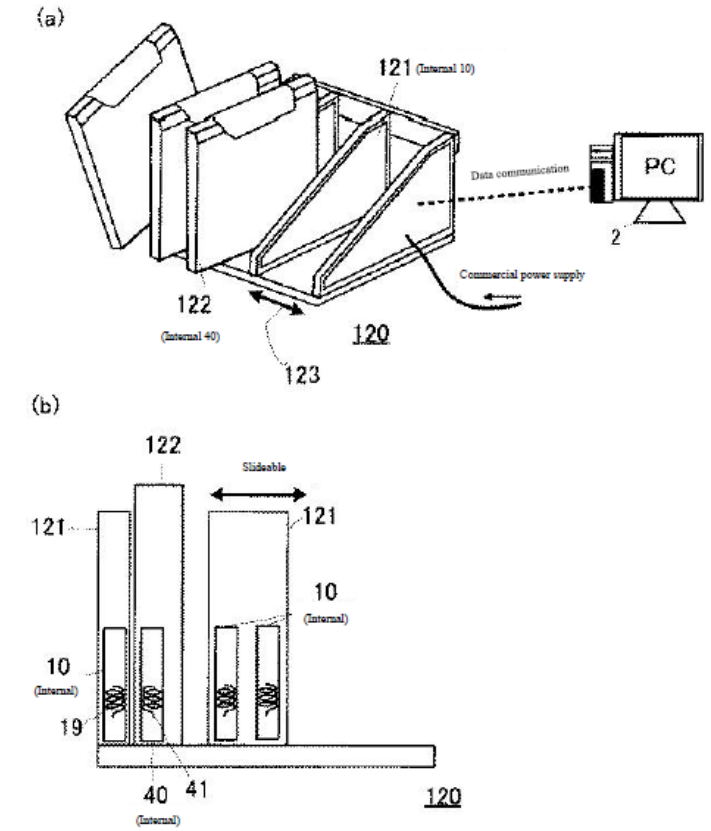
(a)
121 (Internal 10)
Data communication
PC
2
Commercial power supply
122
(Internal 40)
120
123
(b)
122
Slideable
121
121
10
(Internal)
10
(Internal)
19
40
41
(Internal)
120

FIG. 12

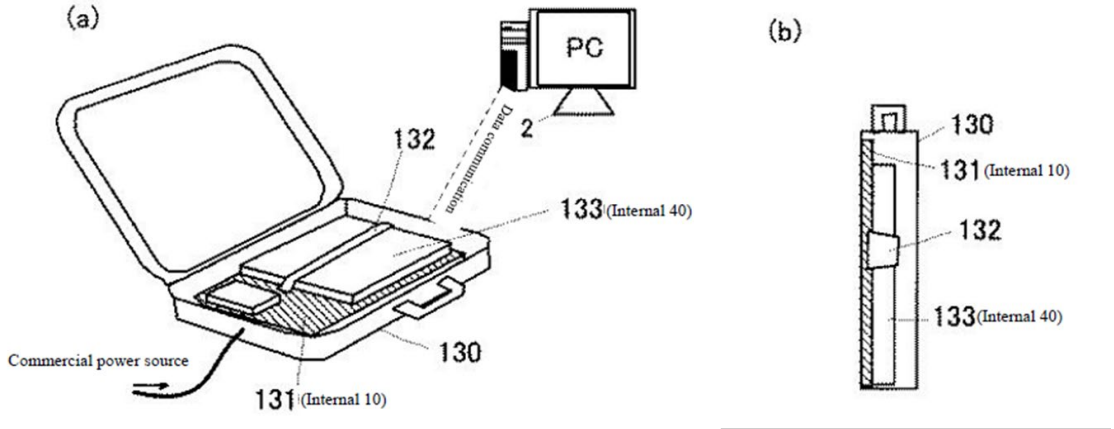
(a)
PC
2
Data communication
132
133 (Internal 40)
130
Commercial power source
131 (Internal 10)
(b)
130
131 (Internal 10)
132
133 (Internal 40)

FIG. 13

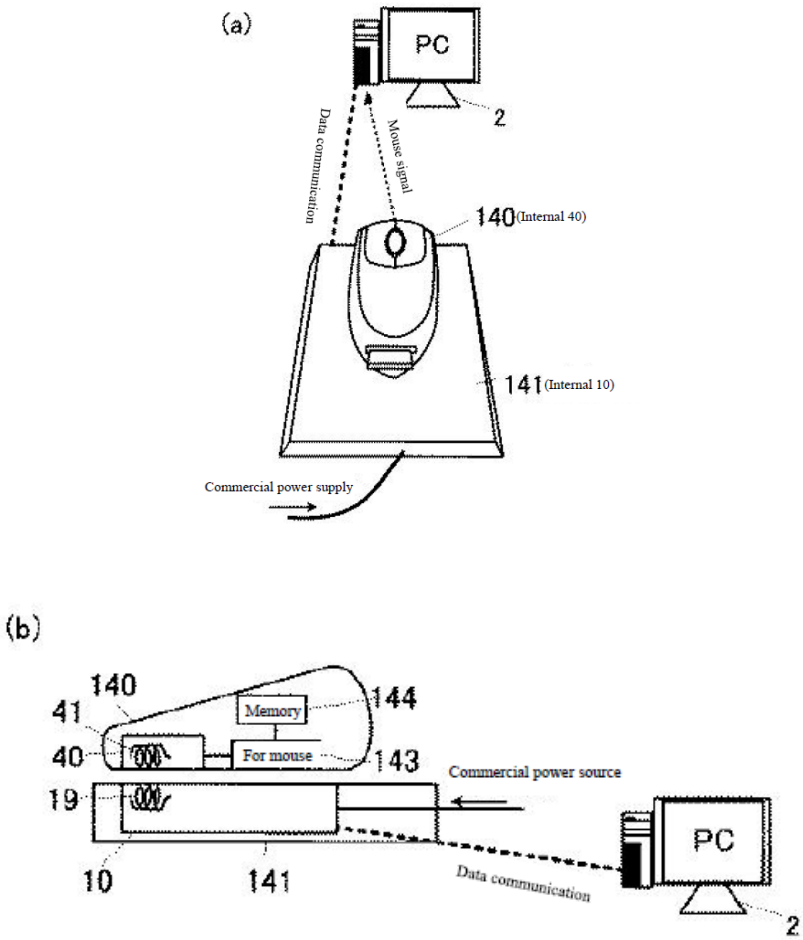

FIG. 3 (below) shows "power supply operations carried out between [PTM10 and PRM40]," applicable to *Okada*'s configurations. (Ex.1005, FIG. 3, ¶¶0059-0090; 0094-0115.) Thus, any disclosed configurations including features as recited in the limitations of claim 1 (including as modified) explained below is a "**system**" (*e.g.*, FIGS 1, 2, 7, 9-13). (Ex.1005, ¶0030; §§IX.A.1(b)-(m); Ex.1002, ¶119.)

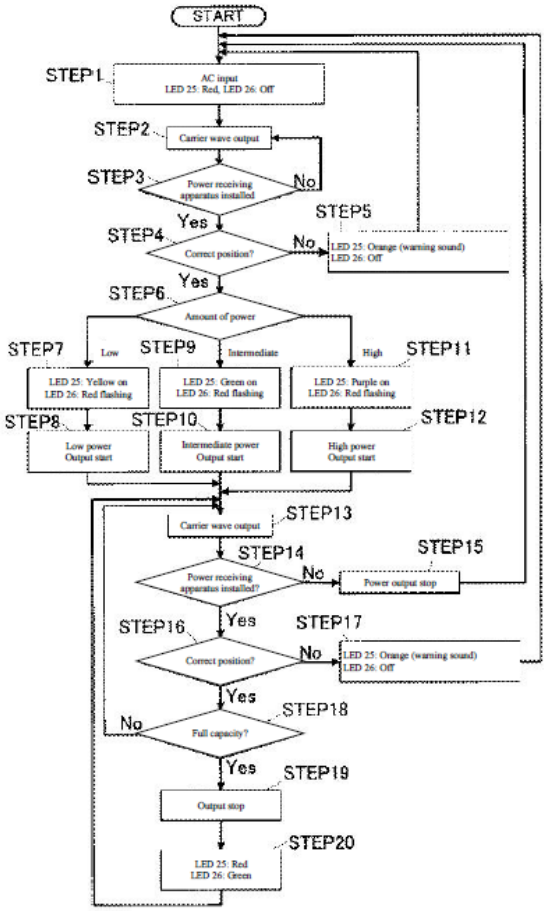
START
STEP1
AC input
LED 25: Red, LED 26: Off
STEP2
Carrier wave output
STEP3
Power receiving apparatus installed
No
Yes
STEP4
Correct position?
No
STEP5
LED 25: Orange (warning sound)
LED 26: Off
Yes
STEP6
Amount of power
Low
Intermediate
High
STEP7
STEP9
STEP11
LED 25: Yellow on
LED 26: Red flashing
LED 25: Green on
LED 26: Red flashing
LED 25: Purple on
LED 26: Red flashing
STEP8
STEP10
STEP12
Low power
Output start
Intermediate power
Output start
High power
Output start
STEP13
Carrier wave output
STEP14
Power receiving apparatus installed?
No
STEP15
Power output stop
Yes
STEP16
STEP17
Correct position?
No
LED 25: Orange (warning sound)
LED 26: Off
Yes
STEP18
No
Full capacity?
Yes
STEP19
Output stop
STEP20
LED 25: Red
LED 26: Green

As shown in annotated FIG. 2 below, PDA3 ("**portable device**") includes a "secondary battery" **("battery")** (**purple)** and PRM40 ("**inductive receiver unit**") that includes coil 41 (**orange**) ("**receiver coil**") and a "**receiver circuit**" (e.g., **red** below), including at least rectifier 43 (**blue**), clock and modulating circuits 46-47, and may further include one/more other PRM40 components (other than the battery) (e.g., circuits 42, 44-45, 48-49, 51, and/or 52). (Ex.1005, ¶¶0012, 0015, 0037, 0040, 0047, 0134-0136, 0138-0140, 0142-0144, claim 4, FIGs. 2, 14-15); Ex.1002, ¶¶121-122.)[7]

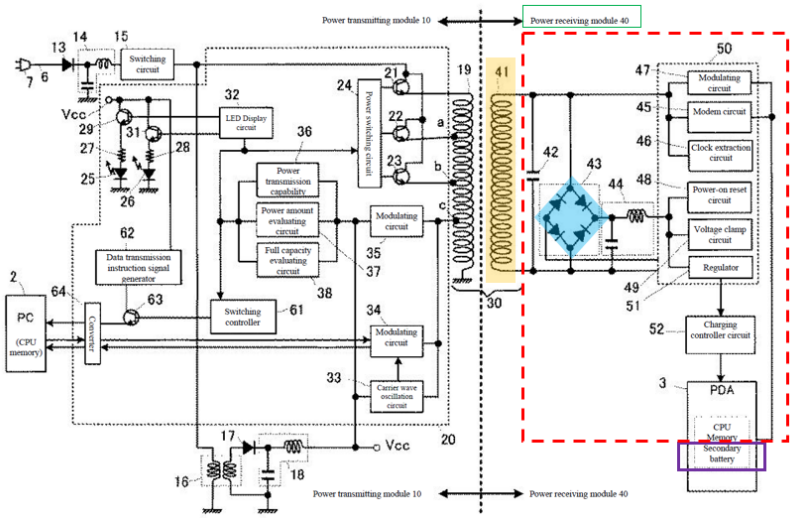

[7] Annotated figures are exemplary visual aids, not intended to define/limit/constrain the prior art mappings (alone or as modified). Such mappings may encompass variations of components, or other components/circuitry, etc. not shown but described/suggested by *Okada* (or as modified) that meet the challenged claims.

b) [1(b)]

Okada in view of *Odendaal* discloses/suggests this limitation. (Ex.1002, ¶¶122-140.)

Okada's "**system**" includes "**a first primary coil**." (§IX.A.1(a); Ex.1005, FIG. 2 (**blue** below), ¶¶0040, 0050, 0095-0107, 0116-119, 0121, 0123-0125, 00132, FIGs. 7, 9-13; Ex.1002, ¶123.)

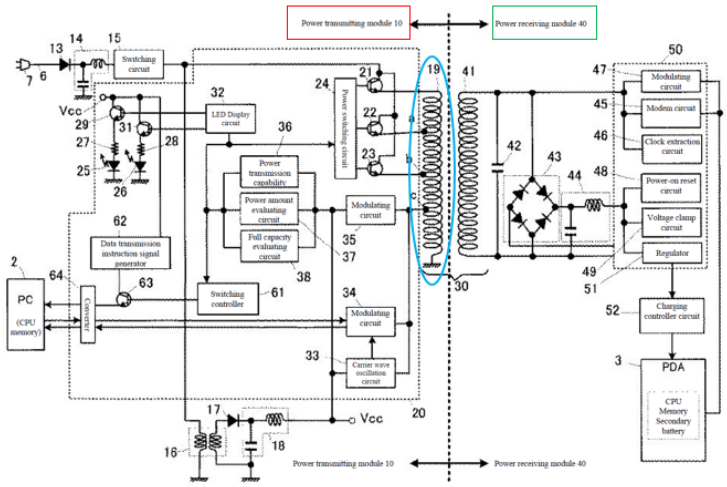

Controlled switches 21/22/23 allow primary coil 19 to **inductively provide** selected **power** to PDA3 via coil 41. (§IX.A.1(a); Ex.1005, FIG. 3, ¶¶0035, 0040, 0051, 0057, 0069-0073; Ex.1002, ¶124.)

As exemplified below, "**primary coil**" 19 (**orange**) is positioned "**substantially parallel to a charging surface of the system**" (**blue/red**). (Ex.1005, FIGS. 11(b) (left), 13(b) (right); §§IX.A.1(a)-(b).) Other exemplary system/apparatus configurations (above) have a similar arrangement. (Ex.1002, ¶125.)

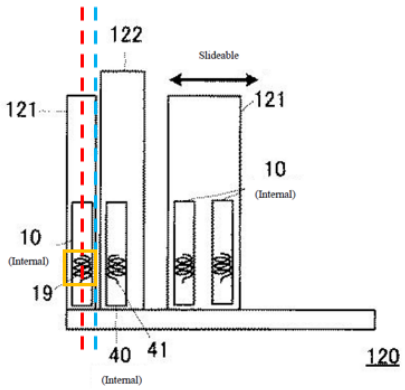

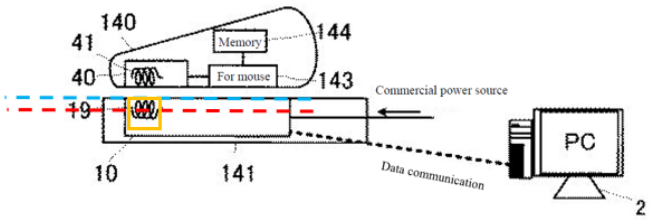

While *Okada* does not expressly state that "**first primary coil…is *substantially planar* and substantially parallel to a charging surface of the system**," a POSITA would have found it obvious to configure *Okada*'s system to implement/use planar primary (and secondary) coil(s) in light of *Odendaal*. (Ex.1002, ¶126.)

Planar coils positioned parallel to a power transfer system's charging surface were known. (Ex.1002, ¶¶50-53, 127-132; Ex.1027, 1-3; Ex.1015, FIGS. 1-4, 7-12, Abstract, 1:5-2:29, 2:64-3:27, 3:39-51, 5:5-47, 5:48-9:5; Ex.1047, FIGS. 1-3, 6, 8A-9, ¶¶0002, 0006-0007, 0018-0025-0034; Ex.1025, FIGS. 1, 3, 8-9, 13, 1:10-2:3, 2:5-12, 2:14-3:2, 4:19-32, 7:25-9:28, 12:27-32, 14:4-17; Ex.1026, FIGS. 1-2, 5, 9A-9C, Abstract, 1:3-4:4, 4:6-9:4, 11:4-15; Ex.1009, Abstract, FIGS. 1-3, 1:4-51, 1:54-2:26, 2:47-3:8, 3:9-39, 4:18-60; Ex.1024, FIGS. 3, 8-9, 1:12-15, 1:39-2:29, 9:41-53, 10:45-57, 11:60-13:4; Ex.1028, Abstract, FIGS. 2-7, ¶¶0001, 0004-0007, 0025-0032, 0041; Ex.1029, 1-4, 9-19; Ex.1030, FIGS. 3-7B, 1:5-9, 1:59-61, 3:19-56, 4:62-

567, 5:25-44; Ex.1036, Abstract, 2:22-3:6 ("primary winding…***substantially parallel*** to…planar **charging surface**"), 5:22, 11:18, 23:20-24:8, 24:19-22.)

Aware of such coil designs (and associated tradeoffs, *e.g.*, size/weight/cost/performance), a POSITA would have been motivated to consider relevant teachings (*Odendaal*) when configuring/implementing system like *Okada*. (Ex.1002, ¶¶50-53, 132; Ex.1047, ¶0033.)

Odendaal discloses inductive power transfer technologies/techniques, and like *Okada*, is in the same technical field as the '942 patent, and discloses features reasonably pertinent to particular problem(s) the '942 patent inventor (and POSITA) was trying to solve. (Ex.1001, 1:50-7:60; Ex.1008, Abstract, 1:5-3:57, 4:50-5:8, 5:24-28, 6:59-64; §IX.A.1(a) (*Okada*).) Thus, *Odendaal* would have been consulted when designing/implementing a contactless/inductive charging system (*Okada*). (Ex.1002, ¶¶133-134.)

Odendaal discloses known use of **planar-type inductor coils** in an inductive power transfer system, for, *e.g.*, charging a cellphone battery. (Ex.1008, FIGS. 1A-1B, 2A, 2C, 8E, 1:58-2:43; *id.*, 2:55-64 ("spiral-shaped conductor may comprise **pcb**…conductors").) The planar resonator includes spirals to transfer energy across the "interface-of-energy-transfer" (IOET) "in…***magnetic form***,…" ("**magnetic coupling**"), to wirelessly charge a cellphone battery (*id.*, 1:60-67, 2:1-7, 2:55-64, 7-10, 2:65-3:5, 4:44-5:8, 6:1-18.) *Odendaal*'s teachings of "**planar**" coils is consistent

with that known in the art. (Ex.1002, ¶¶86-89, 135-137; Ex.1008, 1:60-67, 2:19-21, 2:29-44, 3:65-67.) Consistent *Okada*'s thin-form applications/configurations (e.g., charging pads/case), *Odendaal* discloses the coils are "integrated into a **planar (flat/thin) structure**" (Ex.1008, 3:3-5) and conform to the housing surface to facilitate charging a device "in close proximity" (*id.*, 2:29-44) (coils parallel to system's surface). (Ex.1002, ¶¶50-53, 135-137.)

Thus, a POSITA would have been motivated, and found obvious, to modify the *Okada* system to use a "**primary coil**" that is **"substantially planar and substantially parallel to a charging surface of the system**" (and accompanied such design with corresponding planar secondary coil(s) in the portable device) to expand/complement *Okada*'s thin-form configurations/applications (Ex.1002, ¶¶138-139; §IX.A.1(a)), which would have reduced coil/device volume, device size/weight, and expanded/enhanced *Okada*'s applications (pads/tables). (Ex.1002, ¶¶138-139; §IX.A.1(a); Ex.1005, FIGS. 1, 9, 10-16, ¶¶0033-0034, 0116-0146.) Reducing distance between primary-secondary coils would have promoted close-proximity coupling, improving power transmission efficiency, reducing energy waste, and shortening charging time. (Ex.1002, ¶¶138-139; Ex.1005, ¶¶0066-0068, 0112, FIGS. 4(a)-4(b); Ex.1008, 2:29-44; Ex.1036, 24:19-22.) A POSITA understood complementing a primary/secondary-side planar coil with a secondary/primary-side planar coil (as noted above) would have provided for

efficient transmission of energy between the two planar coils in an inductive charging/power systems, especially where the coils were aligned to allow the alternating *perpendicular magnetic field* generated from the transmitting planar coil in the modified system to be efficiently received by the receiving planar coil. (Ex. 1002, ¶139; §IX.A.1(c).)

With such knowledge/skills, a POSITA would have considered design tradeoffs and techniques/technologies to implement the above-modification with a reasonable expectation of success. Especially since it would have involved known technologies/techniques (*e.g.*, planar coils) that would have predictable led to, *e.g.*, thinner charger units, as contemplated by *Okada-Odendaal*. (Ex.1002, ¶140; §IX.A.1(a).) *KSR Int'l Co. v. Teleflex, Inc.*, 550 U.S. 398, 416 (2007).

c) [1(c)]

Okada-Odendaal and *Kook* discloses/suggests this limitation. (Ex.1002, ¶¶141-174.)

(1) [1(c)(1)]

Switching circuit 15 in PTM10 generates a switching pulse signal supplied to primary coil 19 via a MOSFET switch 21/22/23 ("**FET switch**") selected by circuit 24. (Ex.1005, ¶0049.) Such signal is also converted (via circuits 16-18) to V_{CC} for powering PTM10 components (*id.*, ¶¶0038-0040, 0046, 0049-0051, FIG. 2; §IX.A.1(a)), which are (directly/indirectly) coupled/configured to drive/power coil

19. (Ex.1002, ¶¶141-143.) Circuits 16-18 provide power to other components, *e.g.*, circuit 33, which outputs signals driving coil 19 to send a carrier wave signal to PRM40. (Ex.1005, ¶¶0062-0063, ¶¶0010-0014, 0042-0046, 0055-0058, Claims 2-3, 6; §§IX.A.1(c)(3), IX.A.1(e)-(f).) Circuit 15 provides its signal to switch 21/22/23, and with circuit 24, provides signals that drive coil 19 to transfer power. (*Id.*; Ex.1005, ¶¶0040, 0049-0051, 0070-0073; Ex.1002, ¶0143.)

Okada's exemplary "**first drive circuit**" includes: **(1)** switching circuit 15 (including as modified below) and circuits 21-24, **(2)** same with circuits 16-18 (providing Vcc for IC 20, including circuit 24 (controlling FETs 21/22/23)), **(3)** same with circuit 33 (driving coil 19 to send carrier wave to PRM40), or **(4)** a combination of such components (with/without other circuitry in IC 20). (*Id.*, FIG. 2 (annotated/below (pink)).) The "**first drive circuit**" includes an "**FET driver**" (*e.g.,* switch 15, circuit 24, and/or one/more of circuits 16-18, or a combination thereof) and "**a FET switch**" (*e.g.*, switch 21/22/23). (Ex.1002, ¶144.)[8] These components ("**first drive circuit**") are coupled to rectifier/smoothing circuits 13/14 (providing a "DC voltage") (Ex.1005, FIG. 2, ¶0038, FIG. 17, ¶¶0148-0149) thus

[8] *Okada*'s circuitry is similar to drive circuitry in the '942 patent. (§IX.A.1(a); Ex.1001, 25:15-19, 26:42-43, 44:7-16, 46:39-40.) (Ex.1002, ¶144.)

having a "**DC voltage input**" and also (directly/indirectly) coupled to coil 19 ("**first primary coil**") (*id.*, FIG. 2, ¶¶0039-0049; Ex.1002, ¶144).

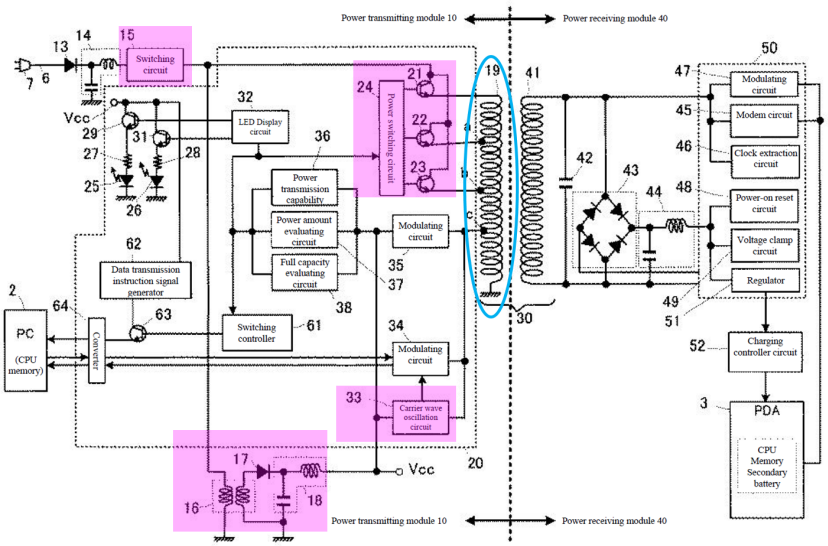

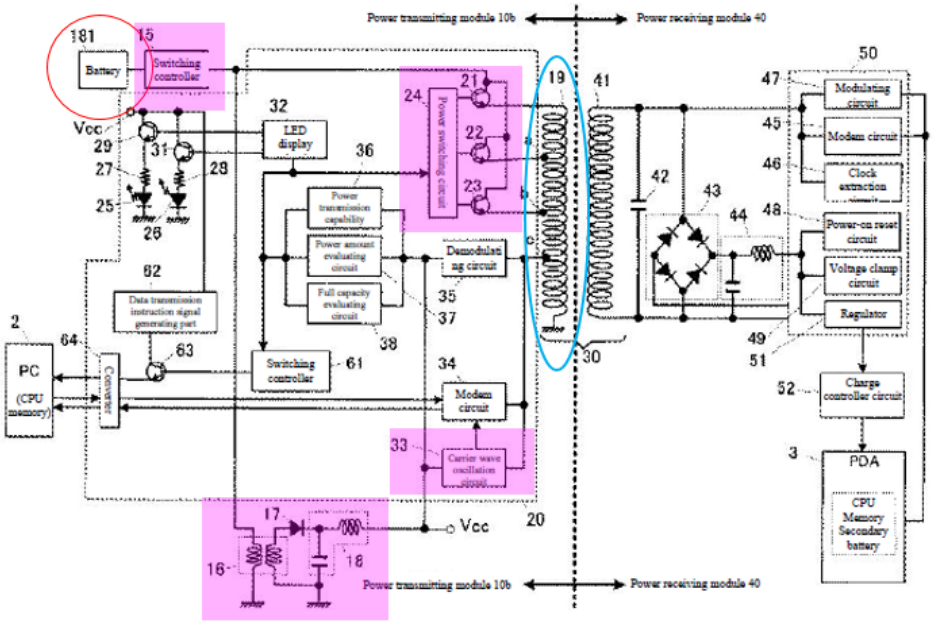

While *Okada* does not expressly disclose the drive circuit(s) having a "**capacitor,**" it would have been obvious to modify the *Okada-Odendaal* system to include such features in light of *Kook*, which is in the same technical field as the '942 patent and *Okada* and reasonably pertinent to problem(s) the inventor/'942 patent (and POSITA) was trying to solve. (Ex.1001, Abstract, 1:54-5:16; §§IX.A.1(a)-(b); Ex.1059, Abstract, ¶¶0009, 0035, 0041, 0049; Ex.1002, ¶145.)

Kook discloses "a non-contact charger" for "charging battery-pack of a mobile device." (Ex.1059, Abstract, ¶¶0001, 0006, 0037-0042.) Charger 1 (blue below) receives power from computer 100 to power/charge mobile device 300 having a battery pack 200/battery 230 (yellow), via primary coil 70/secondary coil 80 (orange). (Ex.1059, ¶¶0015, 0032, 0036-0037, FIG. 1 (below); Ex.1002, ¶¶90-95, 146.)

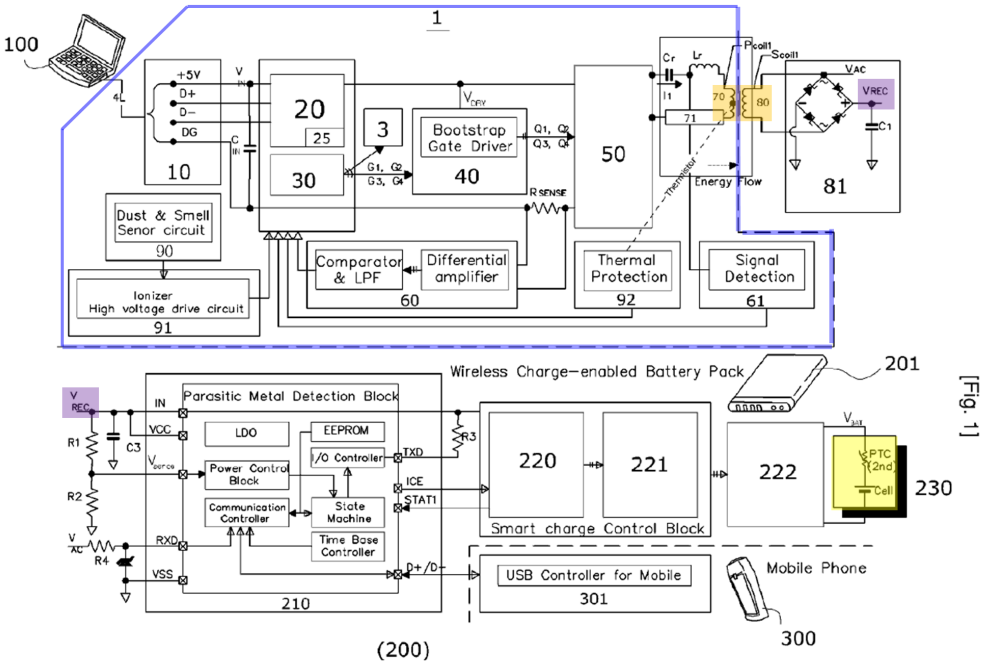

[Fig. 1]

MPU 30 controls charger 1's "internal elements" (Ex.1059, ¶0041), and includes gate drive block 40 (magenta below) and serial resonator converter 50 (*e.g.*, LLC full/half-wave type serial resonator converter (green)), a "**C-L resonator**" (red), and current sensing block 60 (blue). (*Id.*, ¶¶0032-0035, 0041; Ex. 1002, ¶¶147.)

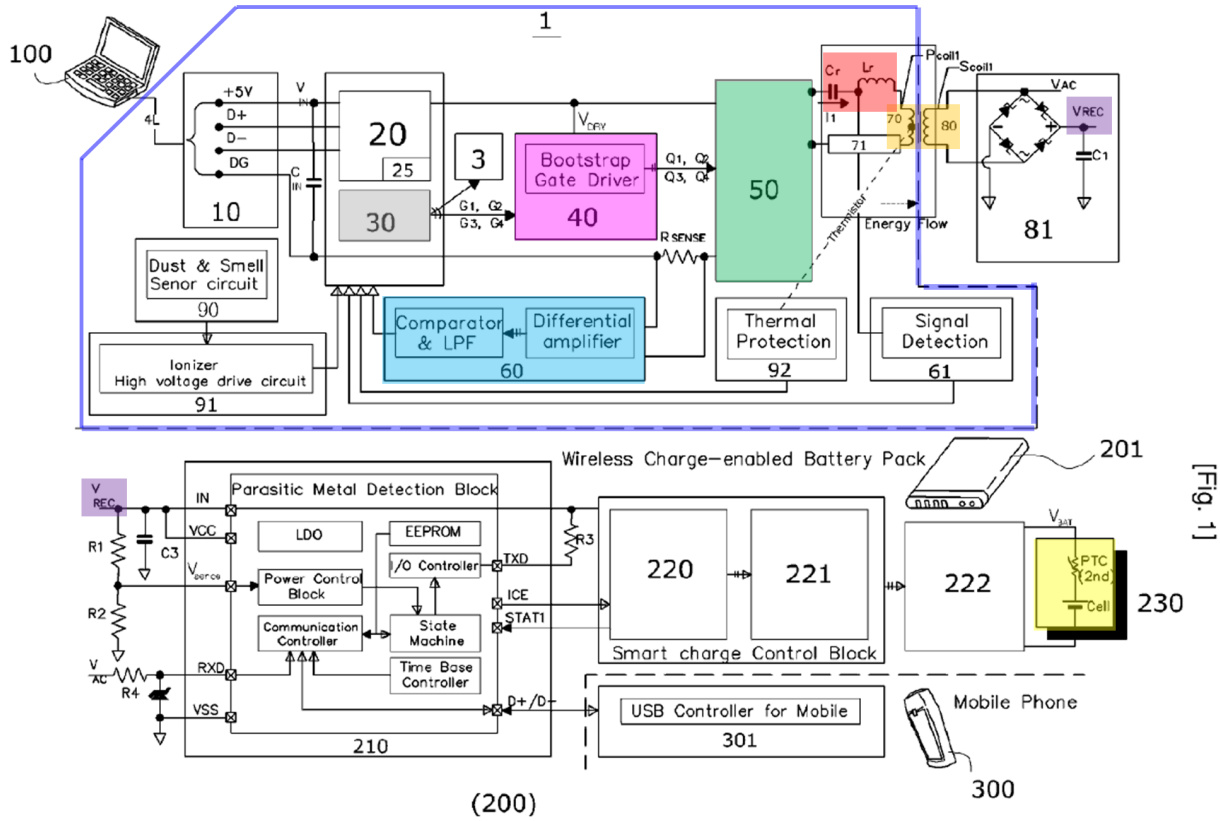

[Fig. 1]

The "C-L resonator" coupled to primary coil 70, including "**capacitor**" Cr "induce[s] LC resonance," "make[s] an electric current into a sine wave and transmit[s] an electric power to the secondary side by means of the inductive coupling." (Ex.1059, ¶¶0041, 0049, FIG. 1; Ex.1002, ¶¶147-148.) Consistent with contemporaneous knowledge and *Kook*, a POSITA would have understood such capacitor-based circuit allows the coil to transmit less-distorted/efficient signals (*e.g.,* sine wave) with reduced harmonics (Ex.1002, ¶¶57-65, 148-150) and been aware that capacitor-based circuits (*Kook*) improved signal transmissions in inductive-based systems, like *Okada-Kook* (minimizing/reducing unwanted

radiations/heat caused by harmonics, etc.) (*Id.*; Ex.1016, 631, 641, 798, ("**blocks out…harmonics**"); Ex.1013, (capacitor/switches reducing harmonics from primary coil), FIGS. 3 (annotated/below), 6, 3:29-4:5, 4:19-5:7, 7:24-8:14, 8:17-23, 24-31, 9:26-12:27); Ex.1008, 2:16-19; Ex.1001, 22:13-30 (harmonics are "undesirable").)

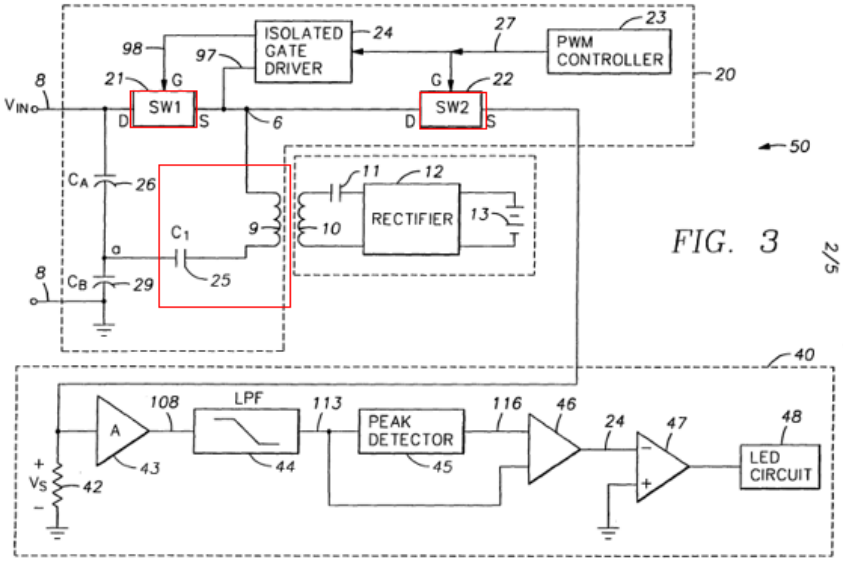

(*See also* Ex.1012, FIGS. 2, 5, 8, 3:30-62, 8:47-9:51; Ex.1014, 62-68 ("filter…for ***reduction of harmonic output***"); *id.*, 62-68; Ex.1015, FIGS. 1-2, 5-12, Abstract, 1:55-2:10, 3:28-51, 4:22-44, 5:45-6:4); Ex.1020, Abstract, (harmonic reducing tuning capacitor); Ex.1021, ¶¶00164-0165; Ex.1029, 22-25; Ex.1002, ¶¶148-150.)

Based on such teachings/knowledge, a POSITA would have been motivated to consider/implement a capacitor with the "**drive circuit**" in the modified *Okada-Odendaal* system to improve power transmission. (*Id.*; Ex.1002, ¶151.) A POSITA would have had the skill/rationale and expectation of success to

configure/implement such modification, especially given the known uses/technologies/techniques/benefits of capacitor-based filter circuits/capacitor(s) to enhance inductive transmission efficiency. (*Id.*) A POSITA would have known/been motivated to consider/implement an appropriately designed capacitor-based circuit/filter positioned between switches 21/22/23 and coil 19, or between circuit 15 and switches 21/22/23, (each as part of "**drive circuit**") to achieve the above-noted benefits. (*Id.*)

A POSITA would have recognized *Kook*'s other advantages/benefits in context of *Okada* (relevant to, *e.g.*, limitations 1(c)(3)/1(k) (§§IX.A.1(c)(3)/IX.A.1(k))). While capable of adjusting/switching power levels based on device power requirements at the **onset** of a charging process, *Okada* does not expressly indicate controlling power levels **during** such process. (Ex.1005, ¶¶0069-0076, FIG. 3.) Nevertheless, in light of *Kook*, a POSITA would have found it obvious to include such features. (Ex.1002, ¶152.)

Kook describes feedback-controlled type functionalities to adjust operating frequency, to control charging power/voltage to the portable device **during** charge/power transfer. (Ex.1002, ¶153.) In *Kook*, current sensing block 60 "stably control[s] an electric power through a current **feedback** using an automatic variation algorithm of **primary** frequency so as…to control a voltage of a **secondary** rectification terminal in the charging battery-pack 200." (Ex.1059, ¶0041, FIG. 1.)

Block 60 analyzes "a signal of the secondary coil 80 to recognize the mobile device 300, monitor the primary coil 70 and the secondary coil 80 to control a charge voltage to a stable voltage." (*Id.*, ¶0033; *id.*, ¶¶0047 (controlling at constant voltage the "voltage of the secondary rectification terminal" using "automatic variation algorithm of primary frequency" of "charger 1"), 0083; Ex.1002, ¶153.)

A POSITA would have understood that resonator converter 50 includes switching FETs and a capacitor. (Ex.1002, ¶154.) *Kook* describes "bootstrap ***gate*** drive block 40" providing four signals Q1-Q4 to serial resonator converter 50. (Ex.1059, FIG. 1, ¶¶0009, 0032-0035, 0041.) Such signals necessarily control corresponding "gates" of associated **FET** switches in converter 50 since only FET switches have "gate(s)" (unlike a BJT) and *Kook* discusses "switching" in relation to converter 50. (Ex.1002, ¶154; Ex. 1059, ¶¶0049, 0075.) The "LLC" serial resonator converter (Ex.1059, ¶¶0009, 0041, 0033, 0064) discloses a **capacitor** ("C") with inductors ("LL"). (Ex.1002, ¶154.)

In light of such teachings/suggestions, a POSITA would have been further motivated, and found obvious, to configure the above-modified *Okada* system such that the switching circuit 15 (part of the "**drive circuit**") to implement a **"FET driver**," "**FET switch**," and a "**capacitor"** coupled to the primary coil of the "**system**," similar to teachings from *Kook*, to improve/enhance power transmission control during charging, by adjusting the switching/operating frequency of the

primary circuitry in response to current feedback information, while providing efficient power transfer via capacitive filtering. (Ex.1002, ¶155.) A POSITA would have appreciated *Kook's* guidance describing a closed-loop feedback arrangement, where powering/charging is controlled through current feedback by varying the primary-side circuit operating frequency using FET driver/switch/capacitor-based circuitry.[9] (*Id.*; Ex.1059, ¶¶0033, 0041, 0047, 0083.)

Such a configuration would have improved/complimented the *Okada-Odendaal* system, which also uses device information to control/adjust power delivery in a closed-loop feedback fashion, but does so at the onset of charging, not during charging. (Ex.1005, ¶¶0069-0076, FIG. 3; §§IX.A.1(a)-(b).) Implementing such features would have provided a stabilized voltage for the battery/mobile device, for controlled/efficient power transfer/consumption during charging. (Ex.1002, ¶156.)

A POSITA would have had the skill/rationale and expectation of success to achieve such modifications, especially since the use of capacitor(s) and closed-loop

[9] A POSITA would have appreciated configuring the "drive circuit" in the modified *Okada* system to use "FET switches/FET driver"-circuitry with the modified switching circuit 15 to accommodate the frequency adjustment features discussed above. (Ex.1002, ¶155.)

feedback power delivery control technologies/techniques was known (*e.g.*, *Okada* and *Kook*). (Ex.1002, ¶157.) Applying such known technologies/techniques (*e.g.*, FET-based drive circuitry in closed-loop feedback system with capacitive filtering) would have predictably led to the modified system ensuring sufficient power is available to charge portable device with energy-efficient continuous power transfer with reduced heat waste and signal distortion. (*Id.*) *KSR* at 416-18.

There were various ways for a POSITA to implement such modifications. (Ex.1002, ¶158.) For example, in addition to implementing an appropriately designed/positioned capacitor-based circuit/filter (*see supra*), a POSITA would have been motivated to configure/leverage features/components in *Okada*'s system used to receive/pass/process device information for controlling power transfer (*e.g.*, demodulator 35, circuits 36-38 (Ex.1005, ¶0064; §§IX.A.1(d)-(m)) to achieve the noted predictable and beneficial power delivery features during charging/powering operations (Ex.1002, ¶158.) A POSITA would have recognized/appreciate the benefits of configuring the system to receive current feedback information/signals (*e.g.,* via demodulator 35, circuit(s) 36/37/38, modified switching circuit 15) to vary the operating frequency of the "drive circuit" to control a voltage output by the

rectifier circuitry 43 in PRM40 used to charge/power the battery. (*Id.*; §§IX.A.1(d)-(m).)[10]

(2) [1(c)(2)]

The *Okada-Odendaal-Kook* combination discloses/suggests this limitation. (Ex.1002, ¶¶159-165; §§IX.A.1(a)-(c)(1).)

As discussed, the *Okada-Odendaal-Kook* system would have been configured to include a "**drive circuit**" (with FET driver, FET switch, capacitor) having current-based closed-loop feedback control to adjust the power/voltage used to charge the portable device battery by adjusting the primary side operating frequency. (§IX.A.1(c)(1).) In light of *Kook-Okada,* a POSITA would have understood that the configured drive circuit in the *Okada-Odendaal-Kook* system, during operation, would have provided an alternating electrical current to the primary coil 19 at an "**operating frequency and duty cycle**," consistent with the features taught/suggested by *Kook* and *Okada*. (Ex.1002, ¶160; Ex.1059, ¶¶0041, 0047, 0083 ("AC current"); §IX.A.1(c)(1); Ex.1005, ¶¶0064-0069, 0074-0076 (properly aligned coils maximize coupling when coil 19 is activated), 0110-0111.)

[10] Other successful designs/configurations would have been contemplated to achieve the same functionalities. (Ex.1002, ¶158.)

Consistent with such teachings, a POSITA would have also understood that the AC signal applied to the modified *Okada* system's planar primary coil(s) would have generated a "**substantially perpendicular**" "**alternating magnetic field**" as claimed, given such a field would have been the natural result of activating the planar coil to inductively transfer power to the portable device as described by *Okada*, *Odendaal,* and *Kook*. (Ex.1002, ¶¶35-53, 161; Ex.1005, ¶¶0035, 0051, 0056, 0063, 0066, 0121, ¶¶0127-0132, FIGS. 11(b) and 13(b); Ex.1059, ¶¶0032, 0037-0042; §IX.A.1(c); Ex.1011, 557-562, 593-594, 601; Ex.1009, 2:62-3:8, 1:54-2:18, 3:20-4:11, FIGS. 1-3; Ex.1010, FIGS. 1-5B, 8:55-9:52, FIGS. 6A-10, 7:21-8:54, 9:53-10:22, 11:27-14:67; Ex.1029, 3-4, 27-50); Ex.1019, FIG. 2B, ¶¶0027, 0064.)

A POSITA would have understood the planar primary coils in *Okada-Odendaal-Kook*, when providing power inductively to the portable device's coil(s) (which also may be planar in the modified system), would have likewise generated a magnetic field substantially perpendicular to the plane of coils 19 and system's charging surface, as known in the art. (Ex.1002, ¶¶162-165; §IX.A.1(c); Ex.1011, 558, 559 ("magnetic field…perpendicular to the plane of [wire] loop"), 562-564, 592; Ex.1048, Abstract, FIGS. 1-6, 1:28-2:4, 2:27-3:14, 4:11-24, 5:23-6:15, claims 1-88; Ex.1049, Abstract, FIGS. 1, 5-6, 9, 11-12, 24-26, ¶¶0008-0010, 0044-0051, 0065-0066; Ex.1050, Abstract, FIGS. 1-5, 9A-9C, 5:22-6:45, 11:22-33, 12:28-38, 16:25-17:23, 17:61-18:3.)

(3) [1(c)(3)]

The *Okada-Odendaal-Kook* combination discloses/suggests this limitation. (Ex.1002, ¶¶166-174.)

Consistent with that discussed above for the *Okada-Odendaal-Kook* system (§IX.A.1(c)(1)-(2)), a POSITA would have been motivated, and found obvious, to configure the system's first drive circuit to provide a sine wave-type signal to primary coil 19 coupled to a resonating circuit (*e.g.*, C-L circuit), based on circuitry/techniques consistent with those taught by *Kook*, such as a serial resonator converter type circuitry that "induce[s] **LC resonance**" to provide "a sine wave" to a primary coil coupled to a "**C-L resonator**." (§IX.A.1(c)(1); Ex.1059, ¶¶0032-0035, 0047, 0055, 0081.) Indeed, *Kook* describes that the **switching frequency** [may be] set to a higher level than the **resonant frequency**" (Ex.1059, ¶0049) and that "resonator converter 50…may operate at a lower **switching frequency** than a **resonance frequency**" to reduce "switching loss of the [secondary rectifier] diodes." (*Id.*, ¶0075.) A POSITA would have understood that the *Kook*'s resonant frequency is that of a circuit including at least the primary coil and associated capacitor, *e.g.*, Cr of the C-L resonator and/or the capacitor of the [LLC full-bridge] serial resonator converter 50 ("**a resonance frequency of a circuit comprising the first primary coil and the capacitor**") as *Kook* discloses transmitting power from the primary coil by using the resonance converter to "induce **LC resonance**."

(Ex.1059, ¶0049; Ex.1002, ¶¶167-168.) The above modified *Okada* system (implementing a resonant circuit (C-L) and frequency-based switching operations (§IX.A.1(c)(1)-(2)) would have been configured to provide similar features for similar reasons explained in context of *Kook*'s teachings. (*Id.*)

Likewise, similar to, and consistent with, *Kook*'s teachings, a POSITA would have been motivated, and found obvious, to configure the "drive circuit" in the above *Okada-Odendaal-Kook* system to apply current to the primary coil 19 at an operating frequency that is within "**within a range of frequencies**" that are "**near**" the "**resonance frequency**" set by the capacitor-based resonance circuit (L-C circuit) in the modified system as discussed above and in §§IX.A.1(c)(1)-(2), to effectively filter the unwanted harmonics for reasons explained (§IX.A.1(c)(1); Ex.1002, ¶169.)

Moreover, consistent with *Kook*'s teachings and a POSITA's state-of-art knowledge, a POSITA would have designed/configured the LC circuit in the modified *Okada* system to filter signals having frequencies higher than the resonance frequency (as it was known such signals are unwanted harmonics). (Ex.1002, ¶170.) A POSITA would have thus understood as a natural result of the operating frequency provided by the modified "driver circuit" is increased (including when operating in accordance with the frequency adjustment features discussed above (§IX.A.1(c)(1)-(2)) and within the range of frequencies that would produce a sine wave signal or "near" the resonance frequency of the circuit as noted above), at

least some of the fundamental sine wave signal (non-harmonics signal) would be filtered by the LC circuit, resulting in a signal having reduced strength (in terms of its voltage/current, due to increased impedance) being transmitted to the portable device's receiver circuit (§IX.A.1(a)). (*See supra*; Ex.1002, ¶170; Ex.1008, 5:33-55 (FIG. 8B showing that "there is minimal impedance at…the resonant frequency").) Consequently, the output signal induced at the output of "receiver circuit" (provided to the battery of the portable device) in modified *Okada* system would have a corresponding lower voltage/current, consistent with that recited in part "**(ii)**" of limitation 1(c)(3) ("**increasing values of the operating frequency…would correspond to a lower voltage or current induced in an output of the receiver circuit**"). (Ex.1002, ¶171; §IX.A.1(a).) As such, for reasons explained, a POSITA would have been motivated, and found obvious to configured the *Okada-Odendaal-Kook* system to implement closed-loop feedback controlled frequency switching power delivery (consistent with that discussed above and recited in limitation 1(c)) based on device information to provide appropriate power to accommodate changes in PDA3's load during power/charging operations. (§§IX.A.1(a)-IX.A.1(c)(2); *supra*; Ex.1002, ¶171.)

For similar reasons, the modified *Okada-Odendaal-Kook* system (and its "drive circuit") likewise would have been configured (and thus discloses/suggests) operating within the above-described range of frequencies that result in wirelessly

powering/charging of the battery in the portable device. (Ex.1002, ¶172.) Indeed, as discussed, the *Okada-Odendaal-Kook* system would have been configured to improve control of the power transmission by adjusting the switching/operating frequency of the primary-side circuitry, *e.g.*, including the "first drive circuit" with modified switching circuit 15, while providing a more efficient power transfer via capacitive filtering during powering/charging of the portable device's battery. (§§IX.A.1(c)(1)-(2), IX.A.1(a)-(b).)

Further, *Okada* discloses that circuit 15's switching signal is converted to a V_{CC} to power components in PTM10, including circuit 33, which generates "a prescribed carrier wave at a certain interval" that is sent to PRM40. (Ex.1005, ¶¶0039, 0056-0057; §IX.A.1(c)(1).) A DC signal "generated by a carrier wave provided by the carrier wave oscillating circuit 33 can be **used as a driving power source for the clock extracting circuit 46 and the modulating circuit 47**" in the "**receiver circuit**" of PRM40. (Ex.1005, ¶0058; §IX.A.1(a).) Even during power transmission, the carrier wave is periodically transmitted to PRM40, and, based on the received device information, PTM10 determines whether PDA3 remains and/or is properly positioned. (Ex.1005, FIG. 3, ¶¶0074-0075.) Only when properly positioned does PDA3 receive power until fully charged, which is determined using the "periodically transmitted" carrier wave. (Ex.1005, FIG. 3, ¶0074, 0076.) A POSITA would have thus been motivated by such teachings to configure the above-

discussed modified *Okada-Odendaal-Kook* system to include similar features to "**allow activation and powering of the receiver unit and charging the battery of the portable device**" as claimed. (Ex.1002, ¶¶173-174.)

d) [1(d)]

The *Okada-Odendaal-Kook* combination discloses/suggests this limitation. (Ex.1002, ¶¶175-181; §§IX.A.1(a)-(c).)

In *Okada*, PTM10 transmits a carrier wave signal to PRM40, resulting in PDA3 to generate/send a modulated signal including device information back to PTM10 via coils 41 and 19. Circuit 35 "demodulates modulated signals included with the voltage from" primary coil 19 (Ex.1005, ¶0042), and the information is evaluated by circuits 36-38 as part of power transfer operations. (*Id.*, FIG. 3, ¶¶0060-0077; Ex.1002, ¶176.) *Okada* explains that the modulation method may be based on "periodic intensity modulation of a carrier wave and may use a phase modulation method to express 0/1 information via phase change information of a signal." (Ex.1005, ¶0058.) Such "information" is "**induced…by the receiver coil**" because the device information is provided by PRM40 through its circuitry (*e.g.,* modulator 47) and "**receiver coil**" 41, which inductively communicates the information consistent with known inductive coupling principles/operations. (*Id.*)

The information provided is used to confirm power reception equipment, full charge, and/or power level. (Ex.1005, ¶¶0056-0057, 0062-0064.) *Okada* also

describes verifying PDA3's presence by measuring intensity of the signal(s) communicated via primary coil 19 and secondary coil 12. (Ex.1005, FIGS. 4(a)-4(b), ¶¶0066-0068, 0074-0076, FIG. 8 (current sensor 91), 0110 (current measuring sensor measuring current "through the primary-side coil 19" when PDA3 "is in proximity" of cradle 4), 0111.) (Ex.1002, ¶177.)

Thus, demodulating circuit 35 is one example of "**a first sense circuit…coupled to the first primary coil**" given it senses/receives/demodulates a modulated response signal from PRM40's coil 41 via coil 19 ("**detect communication of information induced in the first primary coil by the receiver coil**" (*Supra*; §IX.A.1(a)). (Ex.1005, FIG. 2, ¶¶0050, 0064, 0069, 0076; Ex.1002, ¶176.) *Okada*'s teachings are consistent with PO's litigation assertions, which points to a demodulator or the like for the claimed "**sense circuit**." (Ex.1018, 43-44 (referring to "**demodulation** circuitry"), 45-46 (demodulator), 47 ("a **demodulator** as relevant to this part of the claim").)[11] A POSITA would have understood the modified *Okada* system above (§IX.A.1(b)-IX.A.1(c)) would have performed/included similar features as described by *Okada* and claimed. (Ex.1002, ¶¶177-178; *infra* §§IX.A.1(e)-(m).)

[11] Petitioner does not concede any feature in the accused instrumentalities meet this or any claim limitation.

While *Okada* does not expressly disclose a sense circuit including "**a low pass filter and an amplifier**," it would have been obvious to implement such features in view of *Kook*. (Ex.1002, ¶179.)

In addition that discussed above (§IX.A.1(c)), *Kook* discloses that charger 1 includes **current sensing block 60** (blue in FIG. 1 below) that **monitors primary coil 70** to receive signals and associated information. (Ex.1059, ¶¶0008, 0010, 0032-0033, 0041 ("a current sensing block 60 for stably controlling an electric power through a current feedback"), 0045 ("current sensing block 60 receives a signal").)

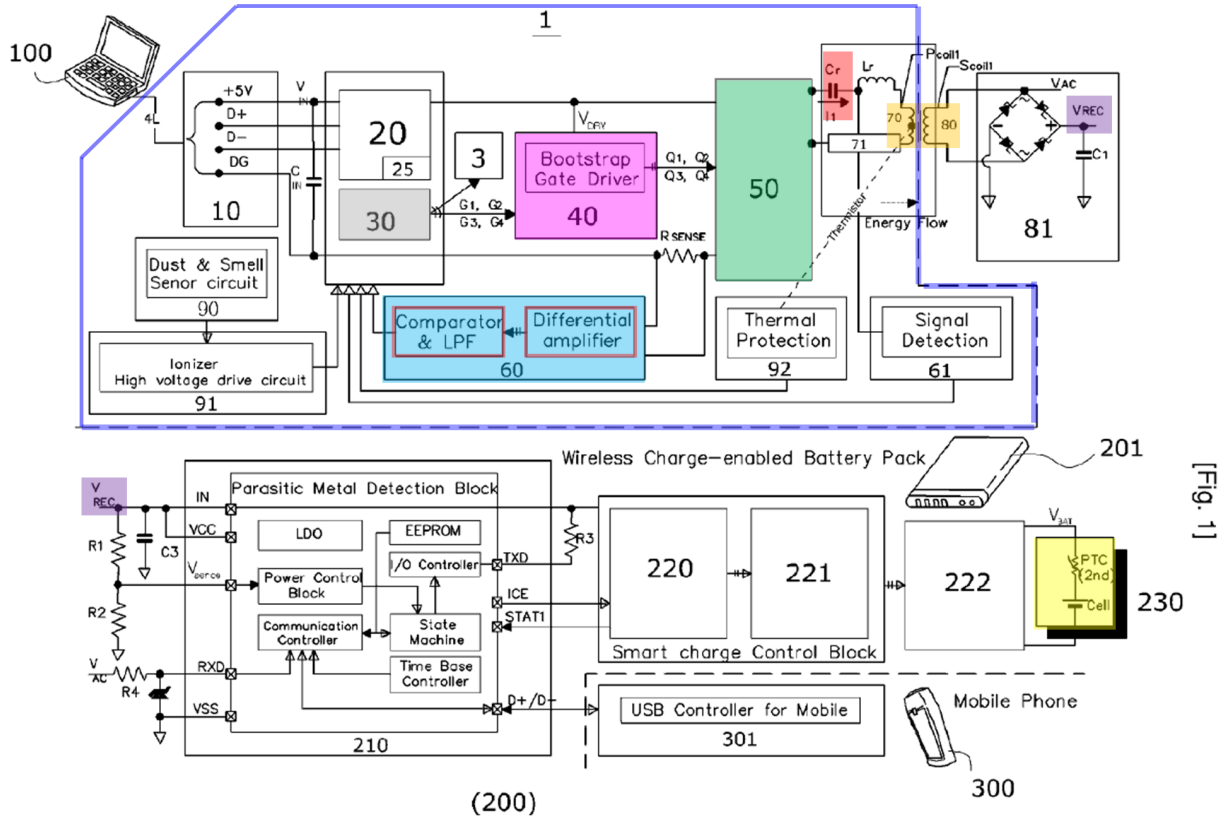

Current sensing block 60 includes a differential "**amplifier**" and a "LPF" ("**Low Pass Filter**" (red above)). A POSITA would have understood that that the "LPF" and "amplifier" would have improved the sensing/detecting of a signal as well as amplifying such a signal from a primary coil (similar to that described by) because it was known that an amplifier increases signal strength and a LPF reduces impacts of unwanted noise/distortion for optimizing signal detection/sensing. (Ex.1002, ¶179.)

In light of such teachings/knowledge, a POSITA would have been motivated to configure the "**first sense circuit**" in the modified *Okada* system (*e.g.*, demodulating circuit 35) to include amplifier/LPF circuitry to provide similar features like that suggested by *Kook*'s current sensing block 60 (*e.g.*, to amplify and filter the signal received by circuit 35 to ensure proper/efficient demodulation of the modulated information signal(s) sent by coil 41 in the receiver circuit. (Ex.1002, ¶180.)

A POSITA would have had the requisite skills and rationale to design/implement such features in the above modified *Okada-Odendaal-Kook* system, and done so with a reasonable expectation of success given the teachings of *Okada* and *Kook* in context of a POSITA's state-of-art knowledge at the time. (Ex.1002, ¶181.) Especially since such modification would have involved applying known technologies/techniques (e.g., amplifiers and LPFs) to predictably yield an

inductive power transfer system having an optimized/improved sense circuit for monitoring current flow through the primary coil in accordance with the above-modified *Okada-Odendaal-Kook* system. (*Supra*; §IX.A.1(c); Ex.1002, ¶181.) *KSR*, 550 at 416.

e) [1(e)]

The *Okada-Odendaal-Kook* combination discloses/suggests this limitation. (Ex.1002, ¶¶182-187.)

Circuit 33 provides a carrier wave to PRM40 that causes responsive device information from circuit 47 of PRM40 via coils 41-19 to be received/processed by demodulator 35. (§§IX.A.1(a), 1(c)(3)); Ex.1005, ¶¶0056-0057, 0062-0064.) Evaluation circuits 36-38 "perform various decision-making processes based on information included in the signal demodulated by the demodulating circuit 35." (Ex.1005, FIG. 2, ¶0042, FIG. 3, ¶¶0060-0077.) Those circuits control power transmission processes (FIG. 3) by providing signals to circuit 24 that controls/selects switches 21/22/23 (part of "**first drive circuit**"). (Ex.1005, FIG. 3, ¶¶0057-0076; §§IX.A.1(a), (c)(1).) Circuits 36-38 provide a signal to switching control 61 (Ex.1005, ¶0045) that determines whether "data can be **transmitted and received**" (*id.*, ¶0081, ¶¶0082-0085) and whether PDA3's charge capacity exceeds a "minimum capacity" for it to transmit/receive data (*id.*, ¶¶0082-0089, FIG. 6).

Circuits 36-38 additionally control LEDs 25-26 that communicates charging status to a user. (*Id.*, ¶¶0041, 0053-0055, 0061, 0069-0072, 0077, FIG. 5; Ex.1002, ¶183.)

Thus, one or more circuits 36/37/38 disclose one example of "**a communication and control circuit** [FIG. 2, **yellow** below]…**coupled to the first drive circuit** [*e.g.*, §IX.A.1(c)(1) pink] **and the first sense circuit** [§IX.A.1(e), 35 blue]" as claimed. (*Supra*; Ex.1002, ¶184; Ex.1005, FIG. 2; §§IX.A.1(f)-(m).) Other components may also be included in such claimed "**communication and control circuit**," *e.g.*, switching controller 61, signal generator 62, controller 64, and/or "switching controller 73" in the multi-coil arrangement of FIG. 7 "system," (Ex.1005, FIG. 7 (**yellow** below), ¶¶0094-0115.)

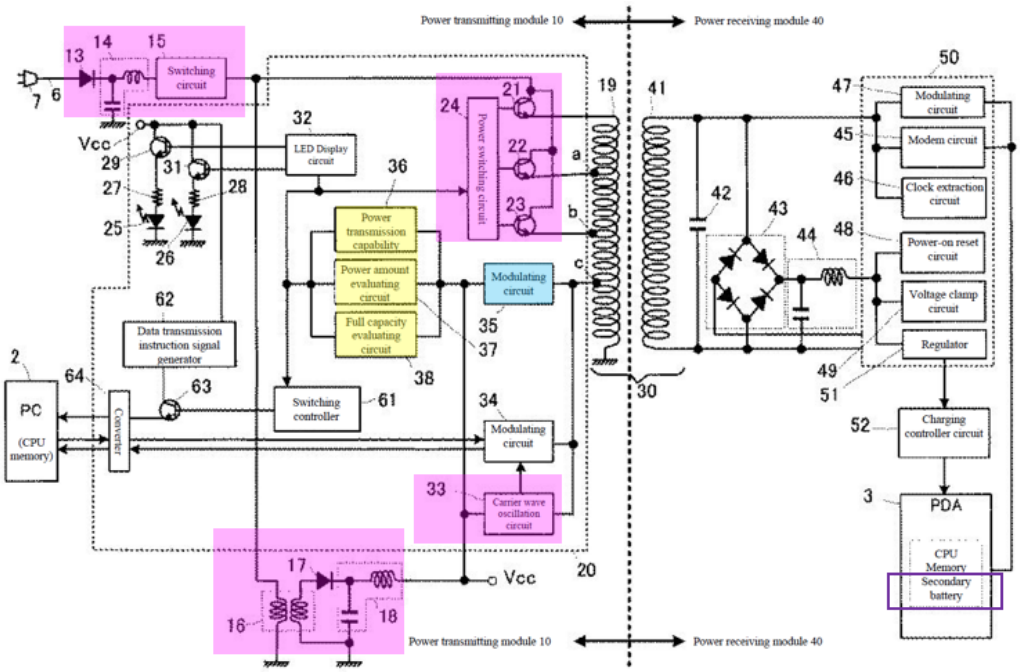

FIG. 7

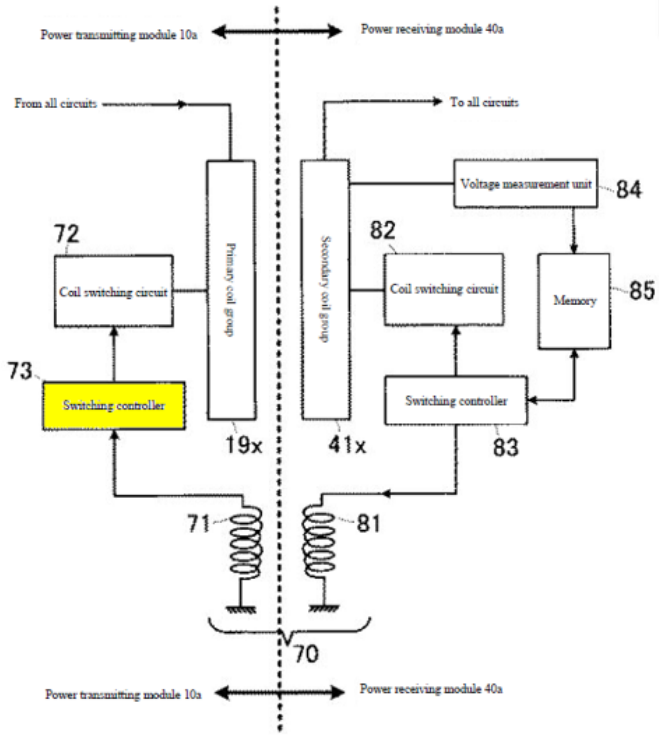

Such inter-relationships would have enabled the "**communication and control circuit**" in the modified *Okada-Odendaal-Kook* system to perform various processes/functions discussed for limitations (f)-(m) below. (Ex.1002, ¶185; §§IX.A.1(f)-(m).) A POSITA would have been motivated to configure the "**communication and control circuit**" in the *Okada-Odendaal-Kook* system to, *e.g.*, process the current feedback information received from demodulator 35 (including as modified in view of *Kook*) for controlling the operating frequency of the modified "**first drive circuit**" to the voltage output of secondary rectification terminal during charging/powering operations, as explained. (§IX.A.1(c)(1); Ex.1002, ¶185.)

Circuits 33, 36-38 may be "configured on the same **IC chip**," *e.g.*, "**IC** 20," which includes other components like "controller" 61, 73. (Ex.1005, ¶¶0046, 0081-0084, FIGS. 2, 7.) Such circuitry would have been understood as compact integrated circuitry designed to perform certain/given certain operations in PTM10, which is consistent with a "**microcontroller**" as understood by a POSITA in context of the '942 patent. (Ex.1002, ¶186; Ex.1001, 24:32-45, 39:33-38 (exemplifying an "IC" or "chip" as a "microcontroller").) The same is true where "switching controller 73" is part of such "**communication and control circuit**" since it sends "instructions" to control the switching to select specific primary coils. (Ex.1005, ¶¶0095, 0101.)

To the extent it is argued/determined the claimed "microcontroller" requires a processor or the like, and *Okada* does not expressly disclose such features, it would have been obvious to configure PTM10 in the modified *Okada* system to include such features because it would have been a foreseeable application of known technologies/techniques to use in PTM10, which uses integrated circuit(s) to perform "control[ler]"-type operations. (*Supra*; Ex.1002, ¶187; Ex.1006, 5:65-6:59, FIGS. 4-5 (controller 40); Ex.1024, 6:60-7:14 (inductive power source including "microprocessor controller 308" for controlling modes of power supply operation), FIG. 3.) A POSITA would have appreciated implementing well-known processor-based microcontroller technology with PTM10 would have been an obvious variation to how the "communication and control circuit" can perform similar

functionalities, while providing known programmable functionalities. Indeed, *Kook* discloses "MPU block 30 for controlling internal elements" of charger 1 (§IX.A.1(c)(1); Ex.1059, ¶0041), and a POSITA would have found it obvious to configure the components in the "communication and control circuit" of the modified *Okada* system with a microcontroller (or include a microcontroller to facilitate/work with such components and their associated functionalities), similar to how MPU block 30 operates in *Kook*. A POSITA would have had the skills and rationale to implement such a modification, and given the known technology and *Okada*'s teachings, would have done so with a reasonable expectation of success. (Ex.1002, ¶187.)

f) [1(f)]

The *Okada-Odendaal-Kook* combination discloses/suggests this limitation. (Ex.1002, ¶¶188-189.) For reasons explained for limitations 1(d)-1(e), one or more circuits 36/37/38 (part of the "**communication and control circuit**" in the modified *Okada* system) (§IX.A.1(e)) detects, through demodulator 35 ("**first sense circuit**") sensing, a modulated response signal from PRM40 (including information corresponding to PDA3 (*e.g.*, device compatibility/capability, power level, and charge status information) via coil 19 ("**a received communication of information in the first primary coil**") used to facilitate power/charge operations, like that

described by *Okada*. (§§IX.A.1(d)-IX.A.1(e); §§IX.A.1(a)-IX.A.1(c); Ex.1005, FIG. 3, ¶¶0056-0057, 0059-0077; Ex.1002, ¶189.)

g) [1(g)]

The *Okada-Odendaal-Kook* combination discloses/suggests this limitation. (Ex.1002, ¶¶190-194.) As discussed, a POSITA would have been motivated to configure the *Okada-Odendaal-Kook* system to implement closed-loop feedback controlled frequency switching power delivery based on device information to provide appropriate power to PDA3's battery during power/charging operations. (§IX.A.1(c).) Indeed, as explained (limitations 1(b)-1(f)), the communication/control circuit (*e.g.*, circuit(s) 36/37/38) in the *Okada-Odendaal-Kook* system would have operated the "**first drive circuit**" (§§IX.A.1(c)-IX.A.1(f), *e.g.,* with modified switching circuit 15 and *e.g.,* circuits 16-18, 21-24, 33) by *e.g.*, to provide control signal(s) to circuit 24 for selecting a switch 21/22/23 at the **onset** of a charging process, and/or by controlling power transmission based on received/demodulated current feedback information to control the operation frequency of the "**first drive circuit**" (*supra*) **during** the charging process in the modified system to inductively transfer power from coil 19 to coil 41 (the "communication and control circuit…configured to" "**operate the first drive circuit to inductively transfer power from the first primary coil to the receiver**

coil"), consistent with that disclosed/suggested by *Okada-Odendaal-Kook*. (§§IX.A.1(b)-1(f); Ex.1005, ¶¶0040, 0047, 0051, 0057, 0069-0073; Ex.1002, ¶191.)

Further explained above, operating the "first drive circuit" (including circuit 33) in the modified *Okada* system within a range of frequencies near a resonance frequency, would allow "**activation and powering of the receiver unit**…" (§IX.A.1(c)(3)) causing the "receiver circuit" (*e.g.*, modulator 47) to provide responsive device information that is received/processed by demodulator 35 ("**first sense circuit**") (§§IX.A.1(d)-(e)) based on modulated signals in primary coil 19 (§IX.A.1(d)) ("operate the first drive circuit…**to activate and power the receiver unit to enable the receiver circuit to communicate the information detected in the first primary coil via the first sense circuit**"). (Ex.1002, ¶192.) Consistent with *Okada*, in the above-discussed modified *Okada* system (*e.g.*, §§IX.A.1(b)-(IX.A.1(c)) circuits 36/37/38 (part of "**communication and control circuit**") controls the operating frequency of the modified switching circuit 15, which provides power to drive oscillating circuit 33 via circuits 16-18 (part of "**drive circuit**" §IX.A.1(d); Ex.1005, ¶¶0060-0064.) Thus, after power/charge operations have begun, circuit 33 (part of "**drive circuit**") in the modified system would generate/transmit, via coil 19, the carrier wave that is used to "**activate and power**" components in PRM40 ("**receiver unit**") to enable its "**receiver circuit**" (§IX.A.1(a)) to generate/communicate the responsive device information that is

transmitted back to PTM10 via coils 41 and 19 based on modulation techniques/technologies as explained (§IX.A.1(d)). (Ex.1005, FIG. 3, ¶¶0062-0064, 0074-0090; §§IX.A.1(a)-(f); Ex.1002, ¶192.)

Also consistent with *Okada*'s teachings, the "**communication and control circuit**" in the modified system (*e.g.*, circuits 36/37/38) "perform various decision-making processes based on information included in the signal demodulated by the demodulating circuit 35" (§IX.A.1(d)). (Ex.1005, ¶¶0040, 0042, 0049-0051, 0057-0077, FIGS. 2-3.) Such processes include controlling/configuring inductive powering/charging of the portable device ("**wherein the received communication of information includes information to enable the communication and control circuit to configure the inductive transfer of power to the portable device**"), as explained above. (*Id.*; §§IX.A.1(a)-IX.A.1(g); Ex.1002, ¶¶193-194.)

h) [1(h)]

Okada-Odendaal-Kook discloses/suggests this limitation. (Ex.1002, ¶¶195-198.)

Consistent with *Okada*, in the above-discussed *Okada-Odendaal-Kook* system, PTM10 receives the device information from the "receiver circuit" in PRM40, which is provided to circuits 36/37/38 (part of "**communication and control circuit**") that use the information to "perform various decision-making processes" associated with powering/charging PDA3/battery. (Ex.1005, FIG. 2,

¶¶0042, 0057; *id.*, FIG. 3, ¶¶0060-0077; §§IX.A.1(b)-(g).) The device information includes, *e.g.*, "power consumption information" ("**a power requirement**") that is used to determine the power requirement/level for PDA3/battery. (Ex.1005, ¶¶0057, 0063-0064, 0069-0073, FIG. 3.) (Ex.1002, ¶196.)

Moreover, like *Okada*, *Kook* describes communicating mobile device related information to the charger. (§IX.A.1(c)(1).) Current sensing block 60 "stably control[s] an electric power through *a current feedback* using an automatic variation algorithm of primary frequency… *to control a voltage of a secondary rectification terminal* in the charging battery-pack 200," which describes information **corresponding to voltage/current induced by a primary coil at the output of the device's receiver circuitry**. (Ex.1059, ¶0041; *see also id.*, ¶¶0047, 0054, 0071, 0083; Ex.1002, ¶197.) *Kook* also discloses that "a unique ID" ("**a unique identification code**") is "generated in the [battery or mobile device] in response to the pulse signal of the non-contact charger 1" and is "transmitted to the non-contact charger 1," which, based on the unique ID, supplies power to the battery/mobile device. (Ex.1059, ¶¶00012, 0046.)

In light of such teachings, in addition to other teachings/suggestions in *Kook-Okada* and reasons discussed above (§IX.A.1(c)(1); §§IX.A.1(a)-(g)), a POSITA would have been motivated, and found obvious, to configure the *Okada-Odendaal-Kook* system such that the information communicated (§IX.A.1(g)) to include

power-related information corresponding to PDA3 (*e.g.*, *Okada*'s device capability/compatibility, charge status), information corresponding to a voltage/current induced by coil 19 at the output of the receiver circuit (§IX.A.1(a)), *e.g.*, output of rectifying circuit 43 (which provides DC signal to charge/power PDA3's battery), and a unique ID (similar to that disclosed/suggested by *Kook*) to facilitate the power transmission/adjustment features/operations in the modified *Okada* system as discussed above. (§IX.A.1(c)-IX.A.1(g); Ex.1002, ¶198.) A POSITA would have had similar rationale, skills, and expectation of success as that discussed above for the modifications involving *Kook*'s teachings. (*Id.*) Indeed, a POSITA would have appreciated the benefit of obtaining additional information with the device capability/compatibility/charge information (Ex.1005, FIG. 3, ¶¶0060-0090), such as a unique PDA3 ID that is used to recognize/confirm/verify the mobile device to receive power from the charger system (Ex.1059, ¶¶0046-0047). Such modification(s) would have been within a POSITA's skill and expectation of success, given it would have involved known technologies/techniques (*e.g.*, leveraging *Okada-Kook*'s modified feedback mechanisms/operation for receiving information, including an identifier, for verifying the mobile device and controlling rectifier voltage output for battery charging, like that taught/suggested by *Okada-Odendaal-Kook*. (Ex.1002, ¶198.)

i) [1(i)]

The *Okada-Odendaal-Kook* combination discloses/suggests this limitation. (Ex.1002, ¶¶199-200.) For reasons discussed for limitation 1(h) and other limitations (§§IX.A.1(b)-(h)), a POSITA would have been motivated, and found obvious, to modify the *Okada-Odendaal-Kook* combination to "**operate**" the modified charger "system" (including the "**first drive circuit**" (§IX.A.1(c)) according to the received "**power requirement**" to inductively power/charge, via coils 19 and 41, PRM40 ("**receiver unit**") and PDA3's battery ("**battery of the portable device**"). (§IX.A.1(h); §§IX.A.1(a)-(g); Ex.1002, ¶200.) Such features would have been consistent with the power transfer operations of *Okada*. (*Id.*; Ex.1005, FIG. 3, ¶¶0060-0077.)

j) [1(j)]

The *Okada-Odendaal-Kook* combination discloses/suggests this limitation. (Ex.1002, ¶¶201-205.) As discussed, a POSITA would have modified the *Okada-Odendaal-Kook* system such that the communicated information includes information **corresponding to a voltage/current** induced by the first primary coil **at the output of the receiver circuit** (§IX.A.1(h)), where such information would have been detected as modulated signals in primary coil 19 from receiver coil 41 (*Id.*; §§IX.A.1(d), IX.A.1(g); Ex.1002, ¶202.)

Moreover, as explained, *Okada* discloses continuously providing device information after the onset of power transfer operations (receiving "**additional information**" "**while charging the battery of the portable device**"). (Ex.1005, ¶¶0074-0090, FIG. 3 (below); §§IX.A.1(f)-1(i); Ex.1002, ¶203.)

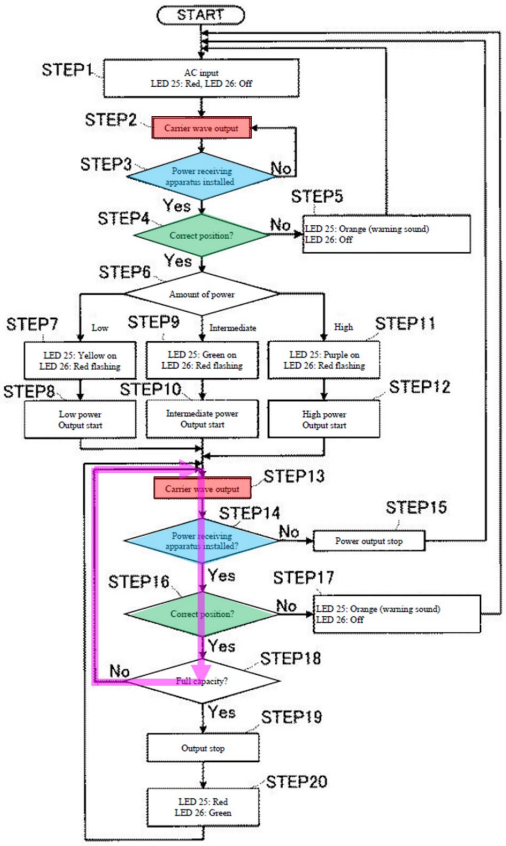

Further, *Kook* explains that upon recognizing the "unique ID" of the battery/device, "a voltage of the secondary rectification terminal in [the battery/device] is controlled to a **constant voltage**" via coils 70/80 by "using an automatic variation algorithm of primary frequency of the non-contact charger 1." (Ex.1059, ¶0047; *id.*, ¶0041 (current sensing block 60 "**stably controlling**" power

"through a current feedback using an automatic variation algorithm of primary frequency"); Ex.1002, ¶204.)

Thus, consistent with the above-discussed modified *Okada* system in light of, *inter alia Kook* (§IX.A.1(c)), and for similar reasons, a POSITA would have been motivated, and found obvious to configure the "**communication/control circuit**" (§IX.A.1(e)) in the *Okada-Odendaal-Kook* system (§§IX.A.1(c)-IX.A.1(i)) to continuously "**receive additional information**" (*e.g.*, information corresponding to a voltage/current induced by coil 19 at the output of the "receiver circuit") "**while charging the battery of the portable device**" (like claimed in limitation 1(j)) in order to "stably control[]" an output voltage to "a constant voltage," thus allowing the charger system to adjust its operation, and thus the transmitted power (similar to that taught/suggested by *Kook* and *Okada* and explained above (§IX.A.1(c)). (Ex.1002, ¶205.)

k) [1(k)]

The *Okada-Odendaal-Kook* combination discloses/suggests this limitation for reasons explained. (Ex.1002, ¶¶206-207.) As discussed for limitations 1(c)-(j), the *Okada-Odendaal-Kook* system would have been configured to perform a closed loop feedback process (§IX.A.1(c)) to stably control, using current feedback, the portable device's rectification terminal voltage (provided as output of receiver circuit (§IX.A.1(a) used to charge PDA3's battery) ("**regulate in a closed loop feedback**

manner the voltage or current at the output of the receiver circuit"). (§§IX.A.1(c)-IX.A.1(j); Ex.1002, ¶207.) For similar reasons explained above, such features would have been provided in accordance with the current feedback information continuously received during operation ("**the received additional information corresponding to the voltage or current at the output of the receiver circuit**") (§§IX.A.1(j)) by varying the operating frequency of the primary-side circuit (via, *inter alia*, modified switching circuit 15 (part of "**first drive circuit**")) (§IX.A.1(c)) while transferring power to charge PDA3's battery (§§IX.A.1(e)-IX.A.1(l)) ("**adjusting *at least one of* the operating frequency…while charging the battery of the portable device**"). (§§IX.A.1(a)-(c); Ex.1002, ¶207.)

l) [1(l)]

The *Okada-Odendaal-Kook* combination discloses/suggests this limitation. (Ex.1002, ¶¶208-210.)

As explained, *Okada* discloses "[e]ven after power transmission has begun," device information is periodically/continuously transmitted from PRM40 to PTM10 in response to the periodic/continuous transmission of the carrier wave by circuit 33. (§§IX.A.1(e)-(k); Ex.1005, ¶¶0074-0077, FIG. 3 (below); Ex.1002, ¶209.)

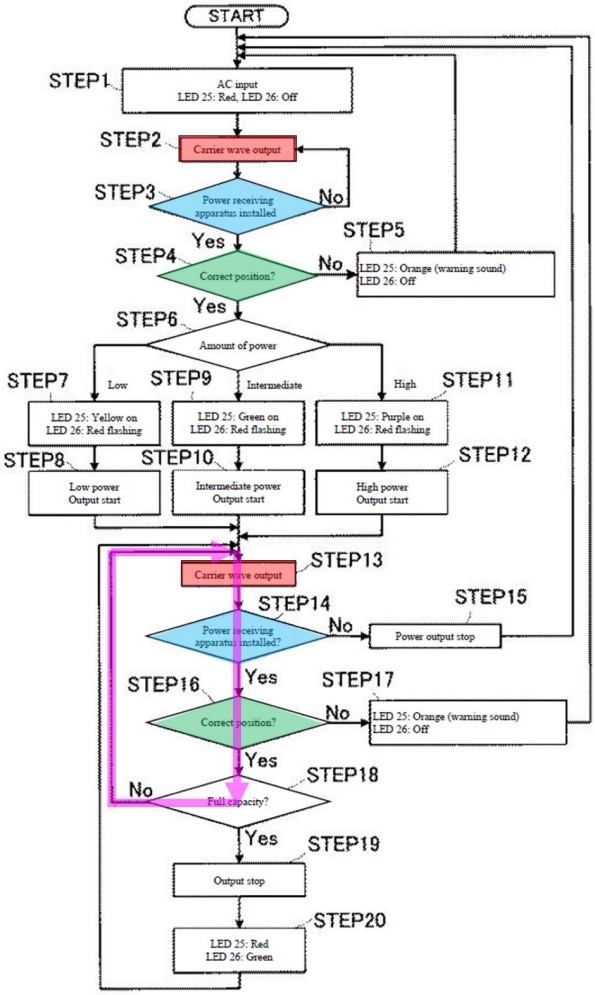

Based on the information received/detected **through** demodulator 35 ("**first sense circuit**") and provided from PRM40's circuit 47, circuit 36 determines whether PDA3 is properly positioned on cradle 4 (Ex.1005, ¶¶0074-0075) and circuit 38 determines whether PDA3 is fully charged (*id.*, ¶0076), where circuits 36/38 are part of the "**communication and control circuit**" (§IX.A.1(e)) ("**monitor for continued presence of the portable device and completion of the charging of the battery**"). (Ex.1005, ¶¶0074-0090; Ex.1002, ¶210.) For reasons explained, the *Okada-Odendaal-Kook* system, would have been configured to perform similar

features in similar fashion, like that recited in limitation 1(l). (§§IX.A.1(a)-IX.A.1(k); Ex.1002, ¶210.)

m) [1(m)]

The *Okada-Odendaal-Kook* combination discloses/suggests this limitation. (Ex.1002, ¶¶211-212.)

Okada discloses that if circuit 36 determines whether a "capable" device "has been removed" from cradle 4 and/or not properly positioned, then "the power switching circuit 24 controls all of the transistors [21/22/23]…into an OFF state and stops power transmission." (Ex.1005, ¶¶0074-0075, FIG. 3). Likewise, circuit 38 determines whether "a charged state of the PDA 3 is at full capacity," and if so, "the power switching circuit 24 controls all of the transistors [21-23] into an OFF state, ends power output." (*Id.*, ¶0076, FIG. 3.) (Ex.1002, ¶212.) Thus, consistent with that disclosed in *Okada* and for reasons explained, the "**communication and control circuit**" (§IX.A.1(e) (*e.g.*, circuits 36, 38), §IX.A.1(j)) in the *Okada-Odendaal-Kook* system would have likewise been configured to "**stop operation of the first drive circuit**" (§IX.A.1(c) for **inductive power transfer to PDA3**, upon determination PDA3 was removed or its battery is fully charged ("**device is no longer present or charging is complete**"). (§§IX.A.1(c)-(m); Ex.1002, ¶212.)

2. Claim 8

a) [8(a)]

The *Okada-Odendaal-Kook* combination discloses/suggests this limitation. (Ex.1002, ¶213.) *Okada* discloses a multi-coil arrangements, where cradle 4 ("**system**") is "equipped with a plurality of [PTM] 10" and "each of the [PTM] 10 may be configured with a plurality of primary-side coil groups 19x." (Ex.1005, ¶0147; §§IX.A.1(b), IX.A.1(e); *see also* Ex.1005, ¶¶0009-0032, ¶¶0094-00107, 0097-0154.) Thus, for similar reasons explained in claim 1, such a configured "**system**" would have included "**multiple primary coils**" and multiple "**drive circuits**" within each of the PTM10s in cradle 4. (§IX.A.1(a)-(c).) A POSITA would have thus been motivated and found obvious to configure the above-discussed "system" as a multi-coil "**system**" in view of *Okada*'s teachings in view of *Odendaal* and *Kook* that provided the same features discussed above and recited in claim 1 for the same reasons, motivations, with the same expectations of success, as explained for claim 1. (§IX.A.1; Ex.1002, ¶213.)

b) [8(b)]

The *Okada-Odendaal-Kook* combination discloses/suggests this limitation under its plain meaning and **as MPF construed above**. (§VIII; Ex.1002, ¶¶214-218.)

As discussed, PTM10 of cradle 4 ("**system,**" including as modified), includes a "**communication and control circuit**" including a "**microcontroller**" for operating the disclosed "**first drive circuit**" (§§IX.A.1(c), IX.A.1(e)-(g)), where the "**communication and control circuit**" includes, *inter alia*, switching controller 73 (IX.A.1(e)) that provides a control signal to the coil switching circuit 72 for **selecting** a coil from multiple primary coils 19X. (Ex.1005, ¶0095, FIG. 7; Ex.1002, ¶215.)

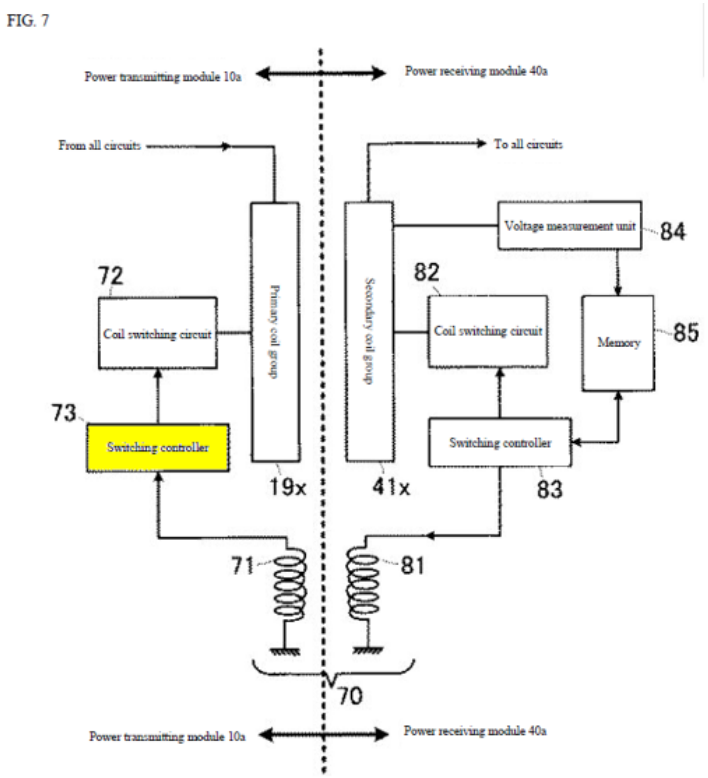

Okada explains that a combination of the primary coil 19 and secondary coil 41 "having the highest power transmission efficiency" are selected for power transmission (*id.*, ¶¶0103-105). A POSITA would have understood that such

combination of coils is the "**most magnetically aligned**" set of coils. (Ex.1002, ¶¶216-217; Ex.1005, FIGs. 4(a)-4(b), ¶¶0066-0067.) Thus, consistent with the teachings of *Okada*, a POSITA would have been motivated, and found obvious, to configure the above-modified *Okada* system (§IX.A.1) such that cradle 4 includes a microcontroller or similar circuitry that operates with associated switching circuitry (*e.g.*, circuits 72-73 in each of the PTM10s of cradle 4) to operate the multiple drive circuits (§IX.A.3(a)) to drive a combination of most magnetically aligned primary-secondary coils to charge the portable device placed on the multi-coil charger system. (Ex.1002, ¶217.)

A POSITA would have had the skills and rationale to configure, and reasonable expectation of success in achieving, such modification especially given the above teachings/suggestions of *Okada* and reasons explained for claim 1. (*See e.g.,* §IX.A.1(e).) (Ex.1002, ¶218.) A POSITA would have had similar motivation and rationale to configure the modified *Okada* "system" to configure the "microcontrollers" in each of the **communication/control circuits** in each of the PTM10s (§IX.A.1(e)) of the multi-coil configured cradle 4 to operate respective "drive circuit(s)" for reasons explained above. (*Supra* (each PTM10 would have a communication/control unit with a "microcontroller")) In either configuration, the microcontroller or similar circuitry, or collectively the "microcontrollers" in each PTM10 of multi-coil cradle 4, exemplify the claimed "**means for operating the**

multiple drive circuits…" under its plain meaning and as interpreted in §VIII. (§§VIII; IX.A.1; Ex.1002, ¶218.)

B. Ground 2: Claim 2 is obvious over *Okada*, *Odendaal*, *Kook*, *Kazutoshi*, *Calhoon*, and *Black*

1. Claim 2

a) [2(a)]

Okada-Odendaal-Kook in view of *Kazutoshi* discloses/suggests this limitation. (Ex.1002, ¶¶219-227; §IX.A.1.) As discussed for limitation 1(k), the **communication/control circuit** in the modified *Okada* system (§IX.A.1(e)) would have been configured to regulate in a "**closed loop feedback manner**" the voltage/current at the receiver circuit output (§IX.A.1(k).) To the extent that the *Okada-Odendaal-Kook* combination does not expressly disclose that such a closed loop feedback process/techniques comprises "**a…(PID) control technique**," a POSITA would have found it obvious to implement such features in view of *Kazutoshi*. (Ex.1002, ¶221.)

Kazutoshi discloses "[a] contactless power supply system" with a power supply device 21 providing power to portable object (cart 3). (Ex.1034, Abstract, FIG. 1, ¶¶0001, 0005-0014, 0024-0030.) Power supply device 21 may provide power through inductive wires 19, where power is induced on a signal pickup coil 20A used to operate a load (motor 15) in the portable object. (Ex.1034, FIG. 3 (below), ¶0029.) (Ex. 1002, ¶222.)

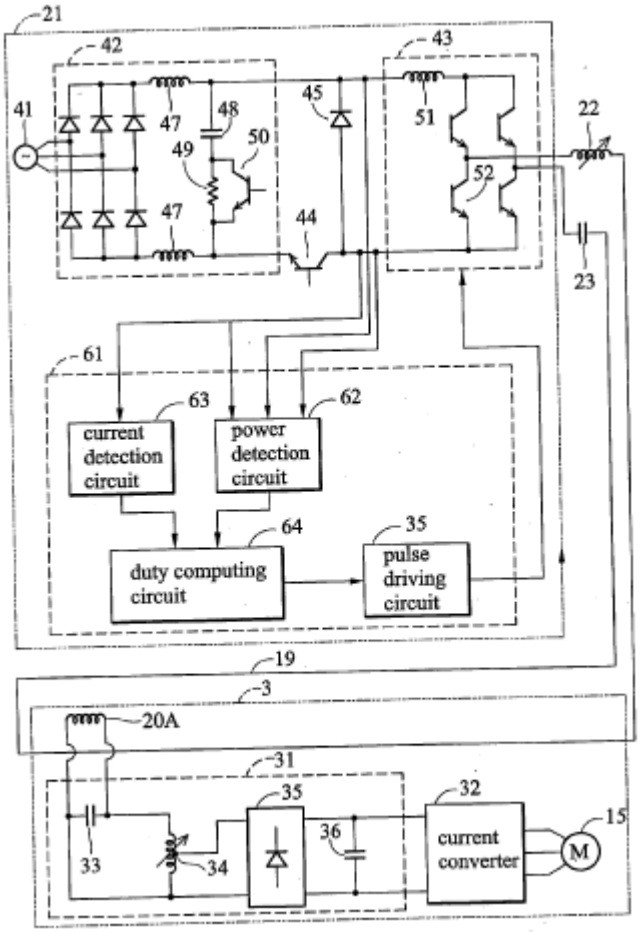

FIG. 3

Device 21 includes controller 61 having power detection circuit 62, current detection circuit 63, duty computing circuit 64, and pulse driving circuit 65. (*Id.*, ¶0038.) Duty computing circuit 64 receives signals (associated with the output of current converter 42 and current alternator 43, and output power of inductive wires 19) from power detection circuit 62 and current detection circuit 63. (*Id.*) Circuit 64 "employs the output current of the current detection circuit 63 as a reference, evaluates the duty of the square wave driving the transistor 52 in the current alternator 43," and provide an output signal to pulse generating circuit 65 to drive

transistor 52 and inductive 19 in order to power cart 3. (*Id.* ¶¶0038, 0043.) (Ex.1002, ¶¶96-99, 222-223.)

Kazutoshi is in the same technical field as *Okada* (including as modified) and the '942 patent, and also discloses features that were reasonable pertinent to one or more particular problems the inventor for the '942 patent was trying to solve. (§§IX.A.1(a)-IX.A.1(b); Ex.1001, Abstract, 3:55-5:17, 33:39-35:3; Ex.1034, Abstract, ¶¶0029, 0036-0039; Ex.1002, ¶224.) Therefore, a POSITA would have considered *Kazutoshi* in context of modified *Okada* combination, looking to design/implement an inductive charging system like that described by the modified *Okada* combination. (Ex.1002, ¶224; §IX.A.1.)

Kazutoshi additionally discloses duty computing circuit 64 comprises other components (*e.g.,* 71-76), where "[t]he multiplier 72, the integrator 73, and the differentiator 74 make up a ***proportional integral derivative (PID)*** controller." (Ex.1034, ¶0039.) In operation, the controller uses the difference between the output current (current detection circuit 63) and a reference value to determine an output signal to pulse generating circuit 65 for driving transistor 52 and inductive wires 19 to inductively power cart 3. (*Id.*; *id.*, ¶¶0040-0043.) The PID controller provides "an output voltage for load resistance R and an output current within the range of the reference current." (*Id.*, ¶0043; *id.*, ¶0044; Ex.1002, ¶225.)

In light of such teachings/suggestions, a POSITA would have been motivated and found obvious to configure the **communication/control circuit** in the modified *Okada* system (§§IX.A.1(c), IX.A.1(k)) to use a PID control technique to regulate one or more outputs of the one or more receiver rectifier circuits (similar to features described by *Kazutoshi*) for regulating the receiver circuit output. (§IX.A.1(k); Ex.1002, ¶226.) A POSITA would have recognized/appreciated the known use of PID control techniques/technologies in a controller of a powering/charging system and to regulate a rectified/output DC voltage, as demonstrated by *Kazutoshi* and known in the art. (*Id.*; Ex.1044, ¶¶0031, 0078; Ex.1046, ¶0073 ("Persons of ordinary skill in the art will be aware that many different algorithms may be employed to enable the aforementioned tuning of the device. For example…the algorithm may implement PID (proportional, integral, differential) processing").)

A POSITA would have had the skill and rationale in implementing, and reasonable expectation of success in achieving, such modification. (Ex.1002, ¶227.) Especially where it would have involved applying known technologies (PID control technologies) (*Kazutoshi* and state-of-art knowledge) with wireless power transfer/charging systems (*Okada-Odendaal-Kook*) according to known techniques (e.g., regulating an output signal of a powering/charging system) to yield the predictable result of providing an inductive power/charging system with a regulated

current/voltage output signal at the receiver circuit, consistent with the features of the modified *Okada* combination discussed above . (*Id.*; §IX.A.1.) *KSR* at 416-18.

b) [2(b)]

The *Okada-Odendaal-Kook-Kazutoshi* combination in view of *Calhoon* and *Black* discloses/suggests this limitation. (Ex.1002, ¶¶228-239.)

As discussed, a POSITA would have been motivated to communicate information associated with the portable device to the charging system to facilitate the power transmission/adjustment features/operations in the modified *Okada* system. (§§IX.A.1(g)-(h); Ex.1002, ¶229.) Consistent with the above, a POSITA would have also been motivated, and found obvious, to consider and implement use of other information to further such power transfer control operations, especially in light of *Calhoon*. (*Id.*) *Calhoon* is in the same technical field as *Okada-Odendaal-Kook-Kazutoshi* and the '942 patent, and discloses features reasonable pertinent to particular problem(s) the inventor for the '942 patent and POSITA was trying to solve. (§IX.A.1(a); Ex.1041, FIGS. 3, 5A, 6, ¶¶0003-0010, 0022, 0029, 0034, 0045-0050, 0065; 1005, ¶0110, 0147-0151; Ex.1001, 1:60-2:17; *infra*; Ex.1002, ¶229.) Thus, *Calhoon* would have been consulted by the inventor and POSITA looking to design/implement a power/charging system like that described by the *Okada* (as modified above). (*Id.*)

Indeed, *Calhoon* discloses an inductive charging system for a mobile device's battery charger/battery pack. (Ex.1041, Abstract, FIGS. 2-3 (below), ¶¶0002, 0008-0010, 0022-0029, 0045, 0065.) (Ex. 1002, ¶230.)

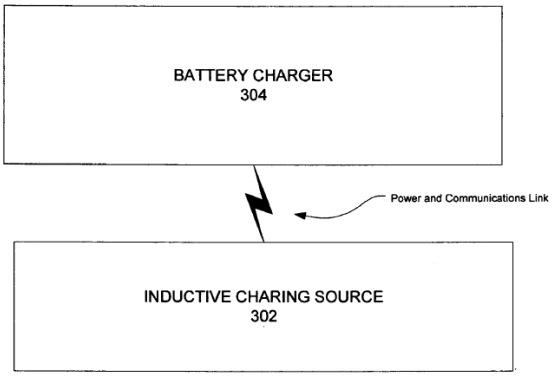

FIGURE 2

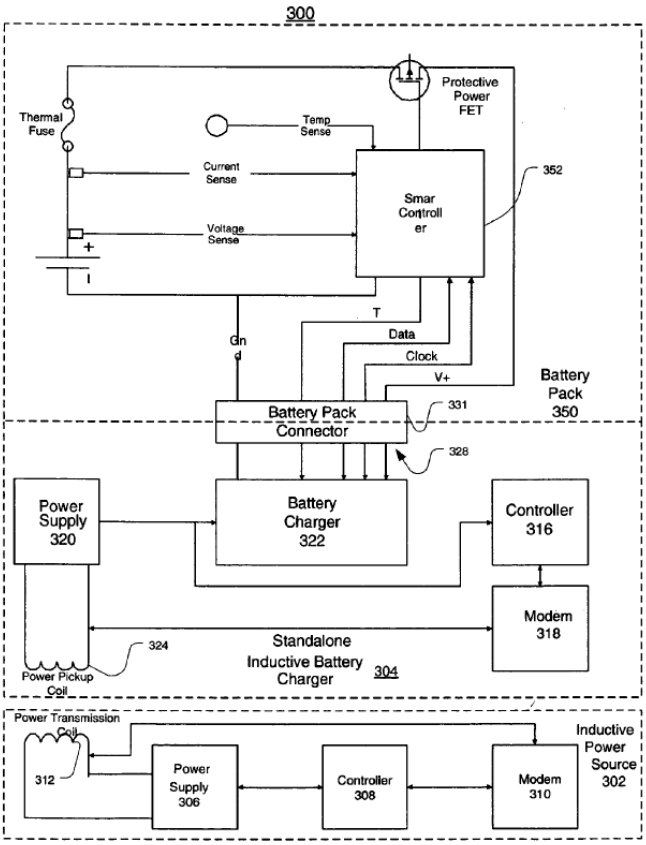

FIGURE 3

Calhoon describes obtaining an **ID/serial number of a power receiver**, *e.g.*, a battery charger (charger assembly 304) or a battery (battery pack 350) and wirelessly communicating that information to a power source (*e.g.*, inductive charging source 302). (*Id.*, Abstract, ¶¶0022, 0034, 0046-0048, 0050-0052, 0056, FIGS. 3, 5A, 6.) Controller 316 in battery charger 304 may include data, "such as **a battery charger ID number**, **serial number**, **manufacturer's name**," which can be used "for novel power operations…, such as shown in FIGS. 5A, 5B, and 6." (*Id.*, ¶0038; *id.*, FIGS. 5A-6, ¶¶0034, 0042-0044, 0045-0048, 0049, 0050-0052, 0056.) Charging source 302 "can request other information relevant to the battery charger assembly 304" (e.g., battery charger ID or charger/battery pack serial number), which charger assembly 304 transmits. (*Id.*, ¶0047.) "***This information can be used for security, data integrity, or other purposes***." (*Id.*) (Ex.1002, ¶¶100-102, 230-231.) Thus, *Calhoon* discloses providing power receiver information including a **"manufacturer identification code"** (*e.g.*, battery charger ID/serial number/manufacturer's name). (Ex. 1002, ¶231; Ex.1041, ¶0047; *id.*, FIGS. 3-5A, ¶¶0036-0037, 0040-0043.)

In light of such teachings/suggestions, a POSITA would have been motivated, and found obvious, to modify the *Okada*-based system to include in the information communicated (§§IX.A.1(g)-(h)) device serial number and/or manufacturer's name information ("**manufacturer identification code**"). (Ex.1002, ¶232.) Such a

modification would have enhanced the verification features discussed above (*see supra*) by allowing the modified system/cradle 4 to verify and/or authenticate each mobile device based on multiple types of information (*e.g.*, device/battery manufacturer's name (*Calhoon*) and/or with unique ID (*Kook-Calhoon*). (Ex.1002, ¶232.) Thus, for similar reasons (including similar rationale/expectation of success, etc.) discussed above (regarding use of unique ID information), a POSITA would have been further motivated in light of *Calhoon*, to configure the modified *Okada* system to maintain, transmit, and use device information like that taught by *Okada*, and by *Kook-Calhoon*, to ensure properly verified and positions/aligned mobile device receive appropriate power in accordance with the charging/power operations discussed above. (§§IX.A.1(a)-IX.A.1(g); Ex.1002, ¶232.) *KSR* at 416-18.

Moreover, while *Okada-Odendaal-Kook-Kazutoshi-Calhoon* do not expressly disclose communicating "**a charge algorithm profile**," a POSITA would been motivated, and found obvious, in view of *Black* to configure the modified combination to communicate charging/powering algorithm profile information with the above-discussed device information in order to enhance/compliment how cradle 4 ("system") determines and inductively provides power to PDA3 for changing its battery. (Ex.1002, ¶233.)

As explained, *Okada* discloses using received device information to determine a power level (low/intermediate/high) based on power requirements of the

portable device. (Ex.1005, FIGS. 3, 5, ¶¶0069, 0073-0076, 0090; Ex.1002, ¶234.) Moreover, it was known to use charging algorithm profile(s) to control mobile device battery charging (*e.g.*, to avoid overcharging). (*Id.*; Ex.1001, 38:13-16 ('942 patent acknowledging "[m]ost mobile devices today already include a Charge Management IC…to control charging of their internal battery").) Consistent with such knowledge, *Black* describes communicating charging profile information for controlling charging operations in an inductive power transfer system having similar features like those of *Okada-Odendaal-Kook-Kazutoshi-Calhoon*.

Black discloses inductive charging a portable device battery, which includes a transceiver for communications with a charger. (Ex.1007, Abstract, FIGS. 1-2 (below), ¶¶0002, 0013-0017.) Battery 100/200 includes a charging coupler 108/208 coupled to cell 104/204 through charging circuit 110/210, and communications coupler 112/212. (*Id.*, ¶¶0015, 0017, 0018 ("***first coil 212 may be a portion of the second coil 208***").) (Ex. 1002, ¶235.)

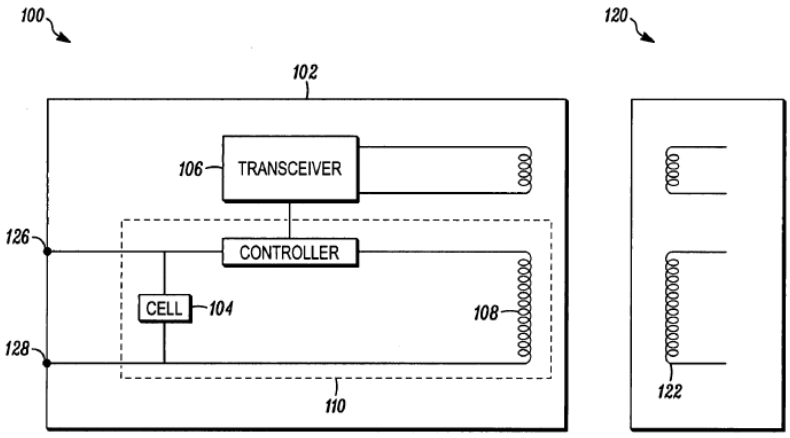

FIG. 1

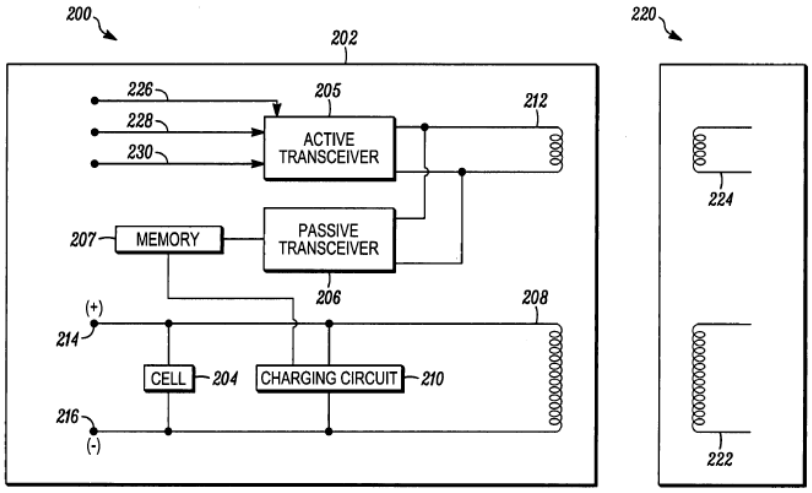

FIG. 2

When battery is in range of the charger, communications between them "may take place and inductive charging can occur." (*Id.*, ¶0019; Ex.1002, ¶¶103-105, 235.)

Black is in the same technical field as *Okada-Odendaal-Kook-Kazutoshi-Calhoon*, and the '942 patent, and discloses features that were reasonable pertinent to one or more particular problems the inventor for the '942 patent (and POSITA)

was trying to solve. (*Supra*; §§IX.A.1(a), IX.A.1(c); Ex.1007, Abstract, FIGS. 1-4, ¶¶0002, 0005, 0012-0028 (and *infra*); Ex.1001, 11:31-39; Ex.1002, ¶236.) Therefore, a POSITA would have considered the teachings of *Black* when looking to design/implement the above *Okada-Odendaal-Kook-Kazutoshi-Calhoon* system. (*Id.*)

Black discloses a procedure for "device identification and charging," where battery information is requested/received upon detecting battery presence. (Ex.1007, FIG. 3 (below), ¶0020.)

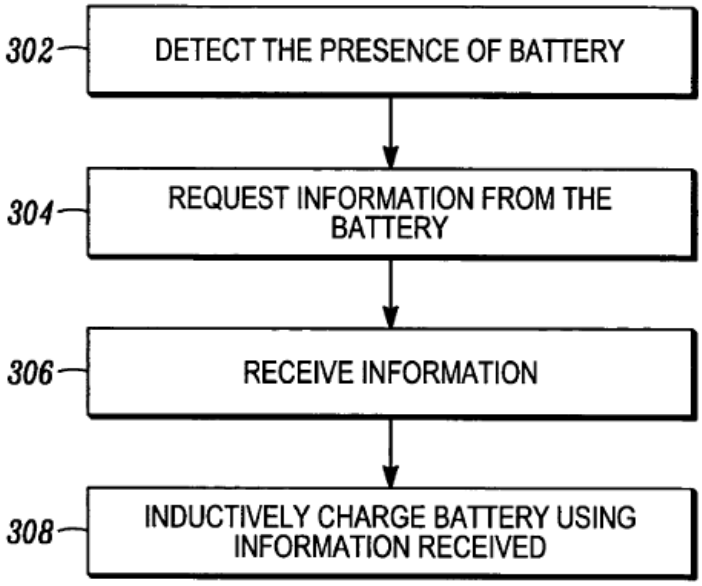

The information may include, *e.g.*, device ID and additional information (*e.g.*, device-type battery 100 is coupled, encryption information, "***battery characteristics*** *or* ***charging profile***." (*Id.*, ¶0021.) Charger 120 inductively charges the battery based on the received information. (*Id.*, ¶0022; Ex.1002, ¶237.)

In light of *Black,* a POSITA would have been motivated and found obvious to modify the *Okada-Odendaal-Kook-Kazutoshi-Calhoon* system to include a charging algorithm profile associated with PDA3 and/or its battery ("**a charge algorithm profile**") with the above-discussed device information communicated by PRM40's "**receiver circuit**" (*supra*; §§IX.A.1(b), IX.A.1(g), IX.A.1(h)) to enable circuits 36/37/38 (part of "**communication and control circuit**") to determine/configure the inductive transfer of power to PDA3 in accordance with the closed loop feedback features implemented by the modified *Okada* system (§§IX.A.1(c)-IX.A.1(g).) A POSITA would have appreciated receiving charging algorithm profile information would have allowed the modified charger "system" to accurately/properly adjust the power suitable for each specific battery/device determined to be capable of, and properly positioned/aligned, to receive such power, as discussed. (*Id.*; Ex.1002, ¶238.)

A POSITA would have had reasons to consider and implement such features given it was known different types of batteries/portable devices have different power/charge characteristics/algorithm-profiles. (Ex.1007, ¶0003; Ex.1037, 1:56-2:6, 2:18-19, 6:51-7:2, 7:36-53, FIGS. 4A-4C; Ex.1039, Abstract, 3:23-35, FIG. 1, 5:20-34; Ex.1002, ¶239.) As such, a POSITA had the requisite motivation, skills, to implement, and reasonable expectation of success in achieving, the above-discussed modification. (*Id.*) Especially since it would have involved applying known

technologies/techniques (*e.g.,* charging algorithms profiles to control charging) to yield the predictable result of providing an inductive power/charging system that uses specific device information to control power transfer, consistent with the features disclosed by *Okada-Odendaal-Kook-Kazutoshi-Calhoon-Black*. (*Id.*) *KSR*, 550 at 416-18.

C. Ground 3: Claim 5 is obvious over *Okada*, *Odendaal*, *Kook*, and *Masias*

1. Claim 5

a) [5]

Okada-Odendaal-Kook in view of *Masias* discloses/suggests this limitation. (Ex.1002, ¶¶240-251; §IX.A.1.)

As explained, *Okada* discloses adjusting the level of power transmission based on the mobile device's "power consumption information." (§IX.A.1; Ex.1005, ¶¶0057, 0063-0064, 0069-0073.) To the extent that *Okada* does not expressly disclose the features recited in claim 5, a POSITA would have found it obvious to configure the modified *Okada* combination (§IX.A.1) in view of *Masias* to implement such features. (Ex.1002, ¶242.)

Masias discloses "[a] power source system including a power distribution apparatus." (Ex.1031, Abstract.) Regarding Figure 1, a power distribution apparatus 10 is described including an energy management system (EMS) 50 having first/second battery inlets (12/13), AC and DC external power source inlets (14/15),

outlets 70/71, among other things. (*Id.*, 4:5-9.) EMS 50 manages "allocation of power from one or more power sources connected at the inlets," and also manages "the supply of power to a plurality of outlets at multiple and customizable voltage levels." (*Id.*, 4:9-13.) *Masias* explains that the inlet and outlet couplings can involve "inductive" connections. (*Id.*, 2:8-12, 3:26-29, 4:9-24, 7:9-41 (recharging done "inductively").) (Ex. 1002, ¶243.)

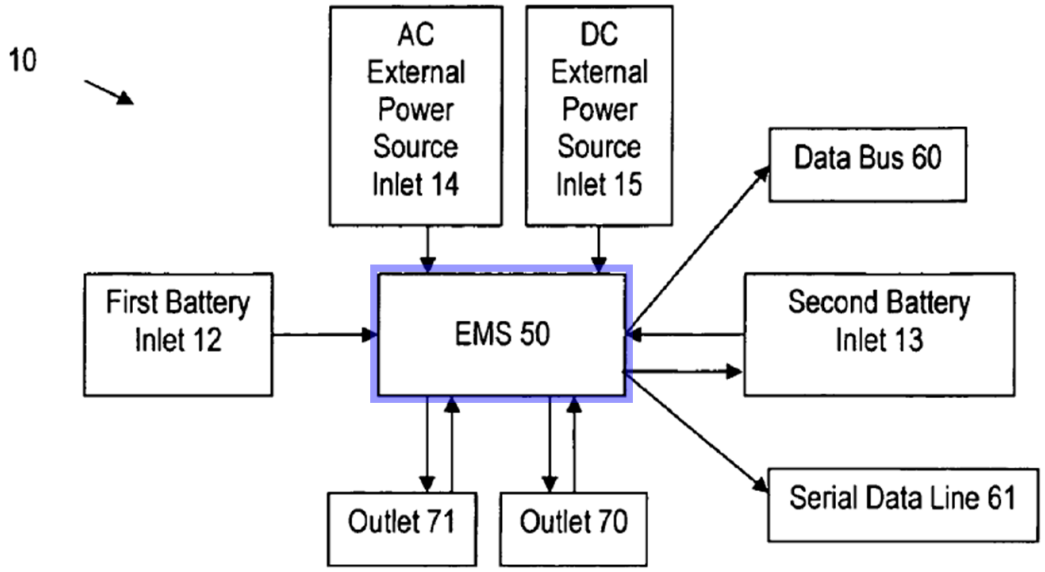

(Ex.1031, FIG. 1 (annotated).) Thus, *Masias* is similar to (and in same technical field as) *Okada* and the '942 patent, as it a power transfer system (with indicative couplings) that provides power to a device based on its level of power consumption. (§§IX.A.1(a)-(c); Ex.1005, ¶¶0057, 0034-0038, 148-151.) *Masias* also discloses features reasonable pertinent to particular problem(s) the inventor for the '942 patent (and POSITA) was trying to solve. (Ex.1001, Abstract, 1:60-5:17; Ex.1031, 6:5-37;

§§IX.A.1(a)-(c); Ex.1005, ¶¶0037-0058, 0094-0109, 0116-0126; Ex.1002, ¶¶106-108, 243-244.) Therefore, a POSITA would have considered *Masias* when looking to design/implement an inductive charging/powering system like that described by *Okada* (as modified above in §IX.A.1). (*Id.*)

EMS 50 is coupled to an AC source rectified using rectifier circuit 45 and a DC power source via inlet 15 and may "include ***a voltage regulator device*** or process to ***provide multiple, constant, preprogrammed output voltages in any range***...***dependent on power needs of various equipment***." (Ex.1031, FIG. 4 (below), 6:3-13; *id.*, 6:14-8:14 (system 100 uses various power sources based on power criteria (*e.g.*, "output power requirements," monitors/displays charge state, capacity, voltage, current, recharging status, etc.), 9:7-62, 10:56-12:65.) (Ex. 1002, ¶245.)

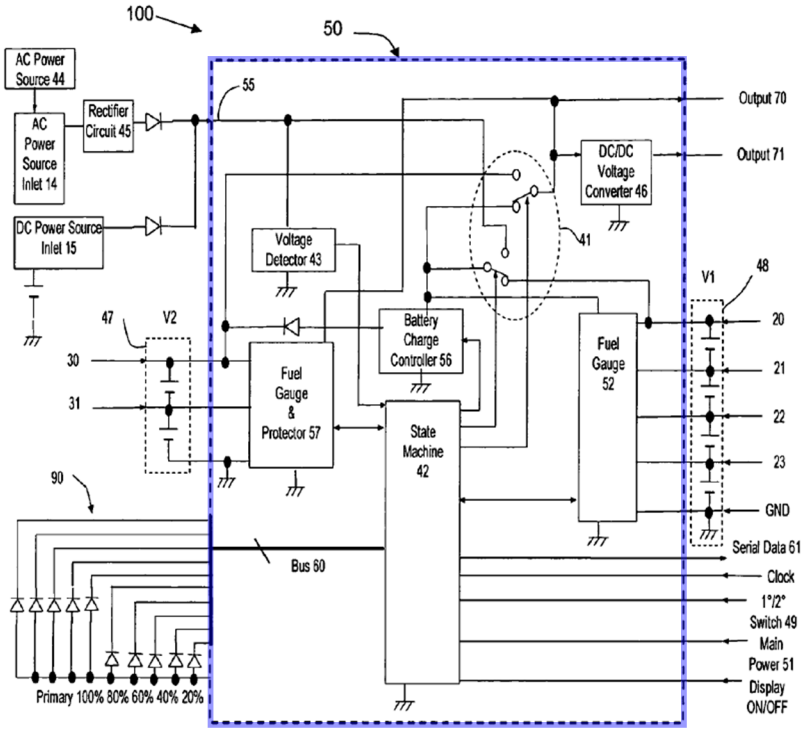

FIG. 4

The operations and functions of EMS 50 components are "controlled by a…programmable state machine 42" in response to information/data received from various component(s)/detector(s)/gauge(s). (*Id.*, 5:41-6:2.) Thus, programmable state machine 42 likewise controls the voltage regulator's output level "depending on power needs of various equipment." (Ex.1002, ¶245; Ex.1031, 6:3-8.)

In light of *Masias,* a POSITA would have been motivated and found obvious to modify the *Okada*-based combination to include power management features via a voltage regulator circuit coupled to the "**DC voltage input**" (§IX.A.1(c)) and provides various DC voltages at such "**input**" to "first drive circuit" (§IX.A.1(c)), where the voltage regulator circuit is coupled to and controlled by the

"**communication and control circuit**"/"**microcontroller**" (§IX.A.1(e)) depending on various device information, *e.g.*, "**received communication of information**" (§IX.A.1(f)) and the "**additional information**" received by the **communication and control circuit** (and its "**microcontroller**") from PDA3 (§IX.A.1(j)), similar to the features/techniques provided by EMS 50 in *Masias*, to enhance/complement the modified *Okada*'s system ability to accommodate, *e.g.*, different voltage levels supplied to different mobile devices with respective power requirements. (Ex.1002, ¶246; §§IX.A.1(h)-(k).)

As discussed, the modified *Okada* system (via, *inter alia*, *Kook*) accounts for mobile devices having different power requirements and regulation/control of the output voltage at the receive circuitry during charging operations. (§IX.A.1; Ex.1005, ¶¶0057, 0063-0064, 0069-0073; Ex.1059, ¶0041.) Thus, a POSITA would have found it obvious to implement such regulator circuitry capable of providing various levels of constant voltages at the "**DC voltage input**" to the "**drive circuit**" based on received/determined power requirement/demand of a detected/aligned mobile device. (Ex.1031, 6:5-13; Ex.1002, ¶247.)

While the *Okada-Odendaal-Kook* system would have included ways to adjust power delivery to PDA3 via selection of the transformation ratio using switching elements 21/22/23 and/or adjusting the operating frequency of the drive circuit (*see* §IX.A.1(c)), a POSITA would have understood that implementing the above

modification based on *Masias*' teachings would have enhanced/complemented the *Okada-Odendaal-Kook* system. (Ex.1002, ¶248.) A POSITA would have appreciated that implementing power management circuitry (e.g., including regulator circuit(s)) that receives the "DC voltage input (§IX.A.1(c)) and provides different DC voltages to the "**first drive circuit**" (§IX.A.1(c)) would have improved the flexibility of the modified *Okada* system in terms of, *e.g.*, the types of external power source(s) that the system may use at the charger. (Ex.1002, ¶249.) A POSITA would have recognized how *Masias*' EMS 50 is capable of receiving different type of power sources (*e.g.*, AC, DC, and multiple battery sources) and ways to provide a "constant" output voltage at different levels based on such source(s), consistent with known voltage regulation technologies/techniques. (*Id.*; Ex.1031, 5:37-13, 8:15-22.) Furthermore, such a modification would have provided redundancy to ensure "uninterrupted power" is provided to the charger of the modified *Okada* system for facilitating the inductive power transfer features discussed above for claim 1. (§IX.A.1; Ex.1002, ¶249; Ex.1031, 6:48-52 ("[r]edundancy is provided…resulting in uninterrupted power even when changing batteries").)

Thus, a POSITA would have been motivated by *Masias*' teachings of using a "voltage **regulator**" in a charging source system to provide a "**regulated**" and "**constant**" output at one of "**multiple**" voltage levels. (Ex.1031, 6:5-13, 8:15-22.) A POSITA would have understood the benefits of implementing power

source/management components/circuitry at the input of the modified *Okada* system's first drive circuit given the *Okada* system (as modified) uses power provided to such drive circuit to not only drive the primary coil but also covert it into an the internal power source V_{cc} to power circuitry on the primary side. (§IX.A.1; Ex.1002, ¶250.) Accordingly, by providing a regulated, constant, and uninterrupted power at one of the multiple voltage levels based on device information, *e.g.*, the power demand of the mobile device in the modified *Okada* "system" would have enhanced overall stability of system operations while providing flexibility for power/charging mobile devices of different power requirements/demands. (*Id.*)

A POSITA would have had the skill/rationale in implementing, and expectation of success in achieving, the above-discussed modification, especially given the modification would have involved applying known technologies/techniques as noted above, to predictably yield a charging system providing uninterrupted/stable/regulated voltage levels depending on various power demand/requirement of detected mobile device. (Ex.1002, ¶251.) *KSR* at 416-18.

D. Ground 4: Claim 12 is unpatentable under § 103(a) as being obvious over *Okada*, *Odendaal*, *Kook*, *Takagi*, *Masias*, and *Kazutoshi*

1. Claim 12

a) [12(a)]

Okada-Odendaal-Kook in view of *Takagi* discloses/suggests this limitation. (Ex.1002, ¶¶252-259; §§IX.A.1.)

While *Okada-Odendaal-Kook* does not expressly disclose that the charging "**system**" is incorporated into a "**second portable device**," a POSITA would have found it obvious to implement such features in view of *Takagi*. (Ex.1002, ¶254.)

Takagi, like *Okada-Odendaal-Kook*, discloses inductive power/signal transfer configurations using coils. (Ex.1033, Abstract, FIGS. 1-7, ¶¶0003, 0013-0030, 0041-0078), and thus is in the same technical field as the '942 patent. (§IX.A.1; Ex.1001, 1:50-7:50.) *Takagi* discloses features reasonable pertinent to particular problem(s) the '942 patent inventor and POSITA was trying to solve. (*Id.*; Ex.1033, ¶¶0005-0015; Ex.1001, Abstract, 1:50-7:50; Ex.1002, ¶¶109-111, 255.) Therefore, a POSITA had reasons to consider/consult *Takagi* when looking to design/implement *Okada-Odendaal-Kook*. (*Id.*)

Takagi discloses a **power transmitting/receiving device** 12 including coil 125, power **transmitting** circuit 121, power **receiving** circuit 122, and secondary battery 123. (Ex.1033, FIG. 2 (annotated below), ¶0047.) Such features are

applicable to portable systems, e.g., cellular phones. (*Id.*, ¶¶0026, 0030, 0043, 0058, 0065, 0070.) (Ex. 1002, ¶256.)

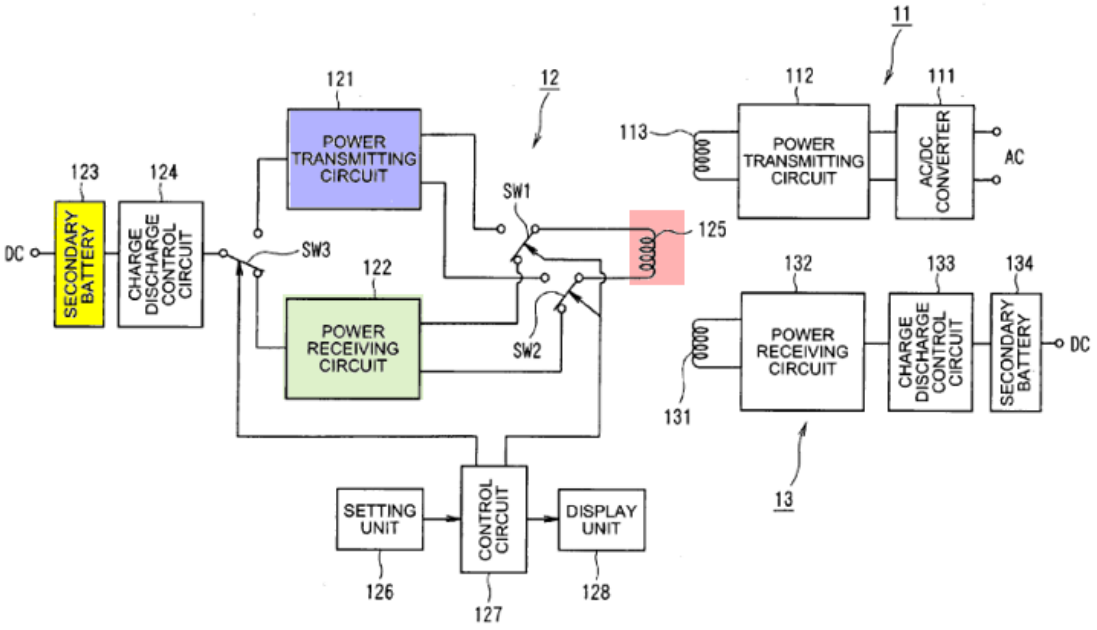

FIG. 2

Transmitting circuit 121 produces an alternating voltage from battery 123, and supplies it to coil 125 for **charging device 13** via coil 131. (*Id.*, ¶¶0048, 0054-0056.) Alternatively, based on switch SW1/SW2 settings, power receiving circuity 122 in device 12 may also **receive power from device 11** via coils 125 and 113 for recharging battery 123. (*Id.*, ¶¶0048-0053, 0057-0072.) Thus, when coil 113 approaches coil 125 (and based on switch SW1-SW2 settings), power receiving circuit 122 receives power from device 11 (via the magnetic coupling between coils 125 and 113) to charge battery 123. (*Id.*, ¶0048, 0052-0053, 0069-0072; *id.*, 0057-0068.) (Ex.1002, ¶¶256-257.)

In light of *Takagi*, a POSITA would have been motivated, and found obvious, to configure the charger system in the modified *Okada* combination to be a portable device (*e.g.,* "**second portable device**") to enhance the versatility of applications of *Okada*'s power/charging system, including providing mobility that complimented the mobile nature of the portable device(s) (PDA3) the charger system is designed to power/charge. (Ex.1002, ¶258.) As further explained below (§IX.D.1(b)), implementing a rechargeable battery with such a mobile charger system (similar to that suggested by *Takagi*) would have facilitated such mobile charging features. (Ex.1002, ¶258; §IX.D.1(b).) Indeed, *Okada* discloses configurations using a rechargeable battery 181 in the charger system to provide power for PTM10. (Ex.1005, FIG. 17, §0148-0152.) Consistent with such teachings/suggestions, a POSITA would have appreciated such a modification would have expanded the functionality of the above-modified *Okada* system by allowing the charger system to be portable while maintaining the ability to have its battery recharged to maintain/perform operations consistent with those disclosed by *Okada* and *Takagi.* (Ex.1002, ¶258.)

A POSITA would have had the skills and rationale in implementing, and reasonable expectation of success in achieving, such modification, especially since it was known to provide portable charging devices with internal batteries that can both power other devices and receive power for charging an internal battery. (*See*

supra regarding *Takagi*; Ex.1005, ¶¶0148-0152; Ex.1002, ¶259; Ex.1043, 4:34-55, FIG. 3, 5:23-25.) Thus, such modification would have involved applying known technologies/techniques (multi-function portable power transfer device using known inductive power components (*Okada*, *Takagi*) to yield the predictable result of providing a versatile and portable device that would inductively charge/power another portable device having a battery, consistent with that discussed above by *Takagi* and *Okada-Odendaal-Kook*. (§IX.A.1). *KSR* at 416-18.

b) [12(b)]

(1) [12(b)(1)]

Okada-Odendaal-Kook-Takagi in view of *Masias* discloses/suggests this limitation. (Ex.1002, ¶¶260-263.)

As explained, both *Okada* and *Takagi* discloses use of a rechargeable battery in a charger system, which would have been included in the above-modified *Okada* portable charger system. (§IX.D.1(a); Ex.1005, ¶¶0148-0152; Ex.1033, ¶¶0048-0053, 0057-0072.) Consistent with that above (*id.*), a POSITA would have been motivated and found obvious, to configure the portable charger system/device with a rechargeable battery that provides a source of DC power that PTM10 (as modified) would use to facilitate the power/charge operations consistent with that discussed above for claim 1, while also being capable of being recharged itself. (§IX.A.1; Ex.1002, ¶261.)

While *Okada* (as modified) does not expressly disclose use of "**a DC-to-DC voltage regulator coupled to the DC voltage input to provide power to operate the system**," a POSITA would have found it obvious to implement such features in view of *Masias*. (*Id.*, ¶262.)

For reasons similar to that explained in Ground 3 (§IX.C), a POSITA would have been motivated to consider the teachings of *Masias* and found it obvious to modify *Okada*'s "**system**" in view of *Masias* to include power management features via a **voltage regulator circuit** that is coupled to a **DC voltage *input*** (*e.g.*, circuits 13-14 of PTM10) and provides **different DC *output*** voltages between multiple discrete values to provide power to the system for operating. (Ex.1031, 6:3-13; §IX.C.1.) A POSITA would have been motivated and understood that such a modification would have thus predictably resulted in the modified *Okada* "**system**" to include a "**DC-to-DC voltage regulator coupled to the DC voltage input"** to provide power to operate the system, *e.g.*, powering other devices/batteries. (*Id.*) A POSITA would have been motivated, and found obvious, to include a DC-to-DC voltage regulator in the "**system**" incorporated in the "**second portable device**" as it would have provided various benefits, *e.g.*, allowing the portable device to enhance/complement the system/device's ability to accommodate different levels of voltages supplied to different mobile devices' based respective power requirements. (§IX.C.1; Ex.1002, ¶263.) A POSITA would have had similar skill, rationale, and

expectation of success to implement such a modification in the portable charger system as that explained above for those combination(s). (*Id.*)

(2) [12(b)(2)]

(3) [12(b)(3)]

Okada-Odendaal-Kook-Takagi-Masias discloses/suggests limitations 12(b)(2)-12(b)(3). (Ex.1002, ¶¶264-268.)

As explained, it would have been obvious to configure the charger system in the modified *Okada* combination to be portable ("**second portable device**") and have a rechargeable battery ("**internal rechargeable battery**"). (§IX.D.1(a)-(b)(1).) For similar reasons, motivations, and teachings/suggestions from *Takagi* in context of *Okada*, a POSITA would have found it obvious to configure the modified portable charge system to include receiver circuitry ("**second receiver unit**") that receives power inductively via coil 19 (§§IX.A.1(a)-(b) **("…coupled to the first primary coil**")) to facilitate wireless **recharging** of the portable charger system's battery. (Ex.1002, ¶265.)

Indeed, a POSITA would have appreciated the benefits of inductive recharging of a portable charging system's battery based on the guidance in *Takagi*, which discloses a "power **receiving** circuit" in a dual-function portable charger (that can both inductive receive and transmit power) for charging an battery 123 and the battery of another portable device 134. (Ex.1033, FIG. 2 (below), ¶¶0026, 0043,

0047-0072; §IX.D.1(a)-(b)(2); Ex.1002, ¶265.) Power transmitting/receiving device 12 includes coil 125, power **transmitting** circuit 121, power **receiving** circuit 122, and secondary battery 123. (Ex.1033, FIG. 2, ¶0047.)

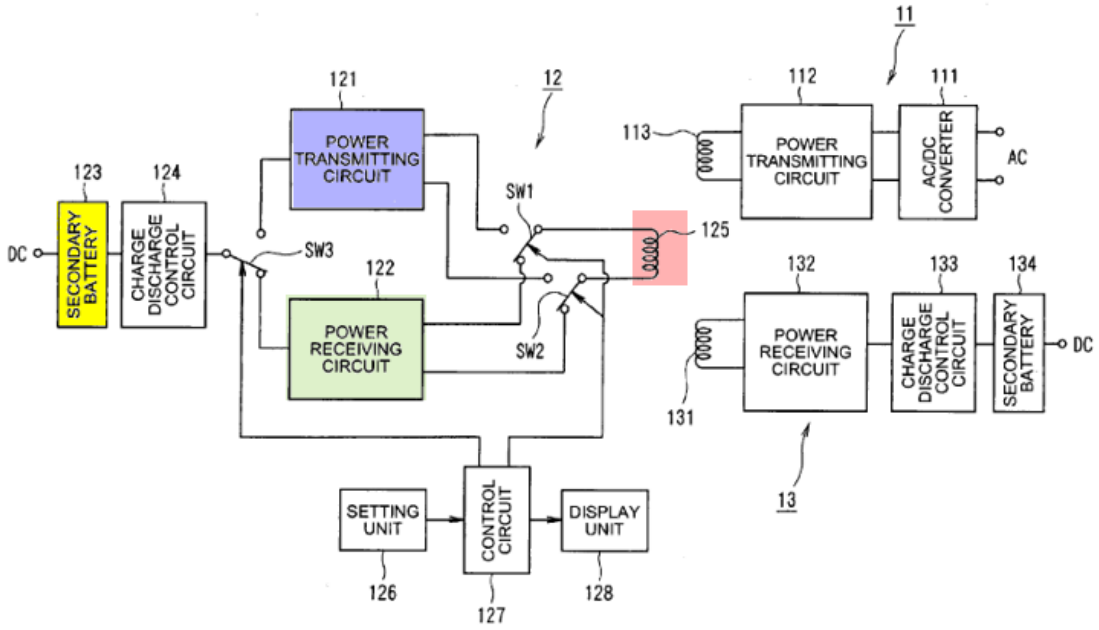

FIG. 2

Thus, *Takagi* discloses configuring inductive power transfer-based devices to operate as both an inductive power receiver and inductive power transmitters ("**operate in a first mode… powering the system…to provide power inductively through [a] primary coil and in a second mode…receiving power inductively through the [] primary coil to power [a] receiver circuit and charge [an] internal, rechargeable battery**"). (Ex.1033, Abstract, ¶¶0003-0030, 0041-0056; Ex.1002, ¶266.)

In light of *Takagi*, a POSITA would have been motivated, and found obvious, to configure the portable charger system/device in the modified *Okada* combination to include similar features to include receiver circuitry and provide power transmitting/receiving modes (**first/second modes**) to, via coil 19, inductively provide power to another device and inductively receive power to charge the internal battery therein, similar to features/configurations taught by *Takagi*, and like that recited in claim 12. (*Supra* above; §IX.A.1; Ex.1002, ¶267.) A POSITA would have appreciated the benefits of such configurations and thus been motivated to enhance the versatility of applications of the modified *Okada* power/charging system, including enhancing/complimenting the mobility aspects of the portable device(s) contemplated by *Okada*. (*Id.*). Indeed, a POSITA would have appreciated such a modification would have allowed the portable charger device to power/charge other devices (while also being capable of its battery to be recharged), thus expanding the device's functionalities, as taught/suggested by *Takagi*. (*Id.*; §IX.D.1(a)-(b)(2).) A POSITA would have appreciated such features would have expanded the applications of *Okada*'s charging system applications (as implemented in the above-modified combination). (§IX.A.1; Ex.1002, ¶267; Ex.1005, ¶¶0001-0008; Ex.1033, ¶¶0003-0030.) A POSITA would have had similar skill, rationale, and expectation of success as noted above (IX.D.1(a)-(b)(2)) to implement such a modification. (Ex.1002, ¶267.)

As such, for reasons explained in light of the combined teachings/suggestions of *Okada-Odendaal-Kook-Takagi-Masias*, a POSITA would have found it obvious to configure the above discussed "**second portable device**" (incorporating the charging "**system**") to power another device inductivity through the primary coil, by using the disclosed "DC-to-DC voltage regulator" to power the system at the "DC voltage input" ("**operate in a first mode in which the second portable device is powering the system at the DC voltage input by the DC-to-DC voltage regulator to provide power inductively through the first primary coil**"); and (2) receive power inductively through the primary coil that powers the disclosed "second receiver circuit" and charges the internal rechargeable battery ("**and in a second mode in which the second portable device is receiving power inductively through the first primary coil to power the second receiver circuit and charge the internal, rechargeable battery**"). (Ex.1002, ¶268.)

c) [12(c)]

Okada-Odendaal-Kook-Takagi-Masias in view of *Kazutoshi* discloses/suggests this limitation. (Ex.1002, ¶¶269-270.) As discussed for limitation 2(a), a POSITA would have found it obvious to implement the PID control technique in the disclosed "closed loop feedback" configuration for regulating the receiver circuit output's voltage/current during inductive powering/charging. (§IX.B.1(a).) For similar reasons, rationale, and expectation of success reasons as

discussed above (§IX.B.1(a)), a POSITA likewise would have modified the "**second portable device**"/"**system**" to implement the PID technique in the "closed loop feedback" configuration for regulating the receiver circuit output's voltage/current during inductive powering/charging ("**first mode**"). (Ex.1002, ¶270.)

X. DISCRETIONARY DENIAL IS NOT APPROPRIATE

Section 325(d) denial is not appropriate here given the prior art combinations/arguments raised during prosecution are not the same/substantially similar to the presented grounds. For instance, the Office, in allowing the challenged claims on first action failed to consider *Okada* in light of the other asserted prior art herein. (Ex.1004; Ex.1001, Cover.) *Okada* discloses/suggests many of the claimed features, and thus is relevant to the patentability of the challenged claim(s), especially when considered in context of the asserted obviousness positions. (§IX.) The examiner also did not have the benefit of expert testimony to support such teachings/suggestions as presented here. (Ex.1002.) Thus, the examiner erred in allowing the claims without considering the teachings/suggestions in the prior art relied on in this Petition (§IX). (Ex.1004, 562-573.) Had the examiner done so, the challenged claims would have likely not have issued.[12]

This is true despite the issued patent corresponding to *Calhoon* (Ex.1041), a Korean version (KR-100836634) of *Kook* (Ex.1059), and a published application with *Okada* as a co-inventor (Ex.1019) having some overlapping subject matter were cited during prosecution. (Ex.1001, Cover; Ex. 1004.) As with other submitted

[12] Petitioner reserves the right to seek leave to respond to any §325(d) (and §314) arguments PO may raise to avoid institution.

references, the examiner erred in a manner pertinent to the patentability of the challenged claims by failing to consider and apply the similar teachings by each of *Okada*, *Calhoon*, and *Kook* alone or in combination with other prior art. Indeed, as mentioned, *Okada* discloses many claimed features (alone and in combination with other asserted art), such as *Kook*, which at least discloses features recited in limitation 1(c) (and others), *Calhoon*, which at least discloses features recited in claim 2. Such teachings should have been considered, especially in combination with other pertinent references (asserted herein). (§IX.A.) The examiner erred by not substantively considering and applying such collective teachings to demonstrate obviousness of the challenged claims, which recite a compilation of conventional features. (*Id.*)

Furthermore, an evaluation of the factors under *Apple Inc. v. Fintiv, Inc.*, IPR2020-00019, Paper 11 (Mar. 20, 2020) (precedential), favors institution.

The **first factor** (stay) is neutral, because Samsung has not yet moved for a stay. *Hulu LLC v. SITO Mobile R&D IP, LLC et al.*, IPR2021-00298, Paper 11 at 10-11 (P.T.A.B. May 19, 2021).

The **second factor** (proximity) is neutral. "The PTAB will weigh this factor against exercising discretion to deny institution under *Fintiv* if the median time-to-trial is around the same time or after the projected statutory deadline for the PTAB's final written decision" (FWD). (Ex. 1051, 9.) The median time from filing to trial

in the Eastern District of Texas is 19 months, meaning trial will be *no earlier* than May 2024 (Ex. 1052, 35), which is close to the court's scheduled jury selection for August 5, 2024 (Ex. 1053, 1.) With this petition filed in June 2023, a FWD may be expected by December 2024, not long after the trial date.

That the FWD may come after the trial date is not dispositive. The Board has granted institution in cases where the FWD issued months after the scheduled trial date. The Board has relied on various justifications, such as diligence in filing the petition, a stipulation not to pursue the asserted grounds in litigation, minimal investment in litigation, and the merits of the invalidity challenge were strong. *Verizon Business Network Services, Inc. v. Huawei Techs. Co*., IPR2020-01141, Paper 12 (Jan. 14, 2021). The same factors are present in this case. For instance, Petitioner diligently filed this petition (challenging long, convoluted claims) in advance of the one-year bar date and within four months of PO's infringement contentions in the Texas Litigation. (Exs. 1018, 1022.) Fact discovery is not anticipated to close until March 18, 2024. (Ex. 1053, 3.) Expert discovery has not yet started. (*Id.*) And the *Markman* hearing has been scheduled for February 6, 2024, after the filing of this petition. (*Id.*)

The **third factor** (investment) also weighs against denial. The district court case is in the early stages. Fact discovery is in its infancy and the parties have not

engaged in expert discovery. (*Id.*, 3.) The parties have not yet identified terms for construction. (*Id.*, 4-6.) Nor have there been any substantive orders in this case.

The **fourth factor** (overlap) also weighs against denial. Petitioner hereby stipulates that, if the IPR is instituted, Petitioner will not pursue the IPR grounds in the district court litigation. Thus, "[i]nstituting trial here serves overall system efficiency and integrity goals by not duplicating efforts and by resolving materially different patentability issues." *Apple, Inc. v. SEVEN Networks, LLC*, IPR2020-00156, Paper 10 at 19 (P.T.A.B. June 15, 2020); *Sand Revolution II, LLC v. Continental Intermodal Group-Trucking LLC*, IPR2019-01393, Paper 24 at 12 (P.T.A.B. June 16, 2020).

While the **fifth factor** (parties) may weigh slightly in favor of denial, because the Petitioner and PO are the same parties as in district court, based on a "holistic view," the factors favor institution. *Samsung Elecs. Co. Ltd. v. Dynamics Inc.*, IPR2020-00505, Paper 11 at 15 (P.T.A.B. Aug. 12, 2020).

Further, the Board should not discretionarily deny institution, because this petition presents compelling merits. *Commscope Tech. LLC v. Dali Wireless, Inc.*, IPR2022-01242, Paper 23 at 4-5 (P.T.A.B. Feb. 27, 2023) (precedential). As demonstrated above, the claimed features are a compilation of technologies/techniques known to be used in inductive power/charge systems. (§IX) Moreover, this Petition is the ***sole*** challenge to the identified challenged claims

before the Board—a "crucial fact" favoring institution. *Google LLC v. Uniloc 2017 LLC*, IPR2020-00115, Paper 10 at 6 (May 12, 2020).

XI. CONCLUSION

Accordingly, Petitioner requests institution of IPR for the challenged claims based on the specified grounds.

Respectfully submitted,

Dated: June 30, 2023

By: / Joseph E. Palys/
Joseph E. Palys (Reg. No. 46,508)
Counsel for Petitioner

XII. APPENDIX A (CLAIM LISTING)[13]

Claim 1

[1(a)] A system for providing power inductively to a portable device comprising a battery and an inductive receiver unit including a receiver coil and a receiver circuit, the system comprising:

[1(b)] a first primary coil that is substantially planar and substantially parallel to a charging surface of the system for providing power inductively to the portable device:

[1(c)] Limitation 1(c)

[1(c)(1)]: a first drive circuit, including a FET driver, a capacitor, and a FET switch, coupled to a DC voltage input and coupled to the first primary coil,

[1(c)(2)]: wherein during operation the first drive circuit is configured to apply an alternating electrical current to the first primary coil at an operating frequency and duty cycle to generate an alternating magnetic field in a direction substantially perpendicular to the plane of

[13] 37 C.F.R. 42.24(1) ("The word count…does not include…[an] appendix of exhibits or claim listing.")

the first primary coil and the charging surface of the system to provide power inductively to the portable device,

[1(c)(3)]: wherein the operating frequency is within a range of frequencies (i) that are near a resonance frequency of a circuit comprising the first primary coil and the capacitor, (ii) such that increasing values of the operating frequency within the range of frequencies would correspond to a lower voltage or current induced in an output of the receiver circuit and (iii) that allow activation and powering of the receiver unit and charging the battery of the portable device;

[1(d)] a first sense circuit, including a low pass filter and an amplifier, coupled to the first primary coil to detect communication of information induced in the first primary coil by the receiver coil; and

[1(e)] a communication and control circuit, including a microcontroller coupled to the first drive circuit and the first sense circuit, configured to:

[1(f)] detect, through the first sense circuit, a received communication of information in the first primary coil;

[1(g)] operate the first drive circuit to inductively transfer power from the first primary coil to the receiver coil to activate and power the receiver unit to enable the receiver circuit to communicate the information detected in

the first primary coil via the first sense circuit, wherein the received communication of information includes information to enable the communication and control circuit to configure the inductive transfer of power to the portable device,

[1(h)] wherein the received communication of information includes: information corresponding to a voltage or current induced by the first primary coil at the output of the receiver circuit; a unique identification code; and a power requirement; and

[1(i)] operate the first drive circuit according to the power requirement to provide the power from the first primary coil to the receiver coil to power the receiver unit and charge the battery of the portable device,

[1(j)] wherein to charge the battery of the portable device the communication and control circuit is further configured to: receive additional information in the first primary coil corresponding to the voltage or current at the output of the receiver circuit while charging the battery of the portable device;

[1(k)] regulate in a closed loop feedback manner the voltage or current at the output of the receiver circuit in accordance with the received additional information corresponding to the voltage or current at the output of the receiver circuit by adjusting at least one of the operating frequency, the duty

cycle, and a DC voltage at the DC voltage input of the first drive circuit while charging the battery of the portable device;

[1(l)] monitor for continued presence of the portable device and completion of the charging of the battery of the portable device detected by the communication and control circuit through the first sense circuit; and

[1(m)] if the portable device is no longer present or charging is complete, stop operation of the first drive circuit for the provision of power inductively to the portable device.

Claim 2

[2(a)] The system of claim 1, wherein the closed loop feedback manner comprises a Proportional-Integral-Derivative (PID) control technique for regulating the voltage or current at the output of the receiver circuit, and

[2(b)] the received communication of information further includes a charge algorithm profile and a manufacturer identification code.

Claim 5

[5] The system of claim 1, wherein the system further comprises: a voltage regulator circuit coupled to the DC voltage input and to the microcontroller, wherein the microcontroller is configured to control the voltage regulator circuit to vary the DC voltage at the DC voltage input based on at least one of the received communication of information and the additional information received by the communication and control circuit from the portable device.

Claim 8

[8(a)] The system of claim 1 wherein: the first primary coil is one of multiple primary coils in the system and the first drive circuit is one of multiple drive circuits in the system; and

[8(b)] the system further comprises means for operating the multiple drive circuits to drive a selection of the multiple primary coils most magnetically aligned with the receiver coil to charge the portable device.

Claim 12

[12(a)] The system of claim 1, wherein the system is incorporated into a second portable device,

[12(b)] the second portable device further comprising:

[12(b)(1)] an internal, rechargeable battery; a DC-to-DC voltage regulator coupled to the DC voltage input to provide power to operate the system; and

[12(b)(2)] a second receiver circuit coupled to the primary coil;

[12(b)(3)] wherein the second portable device is configured to operate in a first mode in which the second portable device is powering the system at the DC voltage input by the DC-to-DC voltage regulator to provide power inductively through the first primary coil and in a second mode in which the second portable device is receiving power inductively through the first primary coil to power the second receiver circuit and charge the internal, rechargeable battery; and

[12(c)] wherein in the first mode, the closed loop feedback manner comprises a Proportional-Integral-Derivative (PID) control technique for regulating the voltage or current at the output of the receiver circuit.

CERTIFICATE OF COMPLIANCE

Pursuant to 37 C.F.R. § 42.24(d), the undersigned certifies that the foregoing Petition for *Inter Partes* Review of U.S. Patent No. 11,462,942 contains, as measured by the word-processing system used to prepare this paper, 13,832 words. This word count does not include the items excluded by 37 C.F.R. § 42.24 as not counting towards the word limit.

Respectfully submitted,

Dated: June 30, 2023

By: / Joseph E. Palys/
Joseph E. Palys (Reg. No. 46,508)
Counsel for Petitioner

CERTIFICATE OF SERVICE

I hereby certify that on June 30, 2023, I caused a true and correct copy of the foregoing Petition for *Inter Partes* Review of U.S. Patent No. 11,462,942 and supporting exhibits to be served via express mail on the Patent Owner at the following correspondence address of record as listed on PAIR:

115007 – NK Patent Law
4101 Lake Boone Trail
Suite 218
Raleigh, NC 27607

By: /Joseph E. Palys/
Joseph E. Palys (Reg. No. 46,508)