US006960968B2

(12) **United States Patent**
Odendaal et al.

(10) **Patent No.: US 6,960,968 B2**
(45) **Date of Patent: Nov. 1, 2005**

(54) **PLANAR RESONATOR FOR WIRELESS POWER TRANSFER**

(75) Inventors: **Willem G. Odendaal**, Blacksburg, VA (US); **Yusban Li**, Longmont, CO (US)

(73) Assignee: **Koninklijke Philips Electronics N.V.**, Eindhoven (NL)

(*) Notice: Subject to any disclaimer, the term of this patent is extended or adjusted under 35 U.S.C. 154(b) by 25 days.

(21) Appl. No.: **10/180,403**

(22) Filed: **Jun. 26, 2002**

(65) **Prior Publication Data**

US 2004/0000974 A1 Jan. 1, 2004

(51) **Int. Cl.**[7] **H01P 7/00**; H02J 7/00
(52) **U.S. Cl.** **333/219**; 320/110
(58) **Field of Search** 333/219, 177; 235/492; 320/108, 109, 110; 330/301; 336/69, 83; 360/123; 363/37, 61; 367/142; 505/210

(56) **References Cited**

U.S. PATENT DOCUMENTS

3,660,790	A	*	5/1972	Palazzetti	336/69
4,409,632	A	*	10/1983	Kanai et al.	360/123
4,894,629	A	*	1/1990	Okamura et al.	333/177
4,981,838	A	*	1/1991	Whitehead	505/210
5,353,001	A	*	10/1994	Meinel et al.	336/83
5,710,502	A	*	1/1998	Poumey	320/108
5,714,864	A	*	2/1998	Rose et al.	320/109
5,847,947	A	*	12/1998	Pan et al.	363/61
6,008,622	A	*	12/1999	Nakawatase	320/108
6,075,427	A	*	6/2000	Tai et al.	333/219
6,124,699	A	*	9/2000	Suzuki et al.	320/110
6,173,899	B1	*	1/2001	Rozin	235/492
6,259,325	B1	*	7/2001	Ishizuka et al.	330/301
6,515,878	B1	*	2/2003	Meins et al.	363/37
6,570,819	B1	*	5/2003	Clark et al.	367/142
6,844,702	B2	*	1/2005	Giannopoulos et al.	320/108

FOREIGN PATENT DOCUMENTS

EP	715392	*	6/1996
EP	932255	*	7/1999
GB	2252208	*	7/1992
GB	2314470	*	12/1997

* cited by examiner

Primary Examiner—Patrick Wamsley

(57) **ABSTRACT**

A planar resonator and method of manufacture provides contactless power transfer using at least two electrically isolated axis aligned conductive across the transfer interface in a coupled inductor or transformer configuration. Signal or power transfer is then accomplished by coupling of magnetic flux. The coupling of electric flux is also accomplished across a same interface and driven with the same conductive spiral-wound conductors. An interface of energy transfer (IOET) has a first spiral-shaped conductor arranged on the top surface of said IOET; a second spiral-shaped conductor arranged on the bottom surface of said IOET, has a vertical axis aligned with the first spiral-shaped conductor. The IOET and the first and second spiral-shaped conductors have a predetermined self-resonant frequency. The planar power resonator stores electric energy in the IOET, and at predetermined frequencies, the arrangement of the first and second spiral-shaped conductors and the IOET permits transfers of magnetic flux and electrical energy between the first and second spirals across the IOET. The resonator facilitates contactless battery charging in devices such as cellphones and wearable electronics where the resonator can be woven into fabric or attached to a person's clothes.

25 Claims, 7 Drawing Sheets

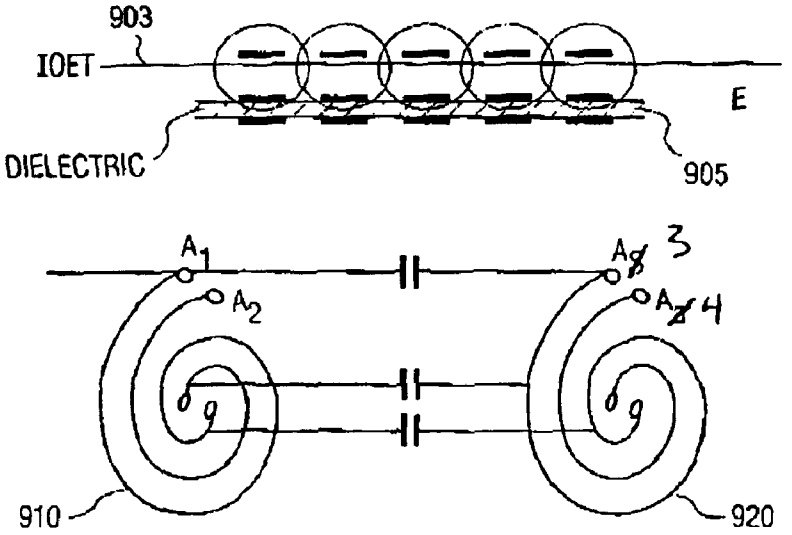

SAMSUNG EXHIBIT 1008

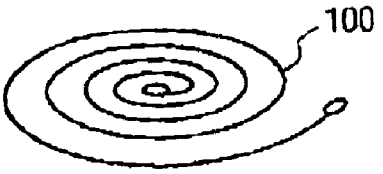

FIG. 1A

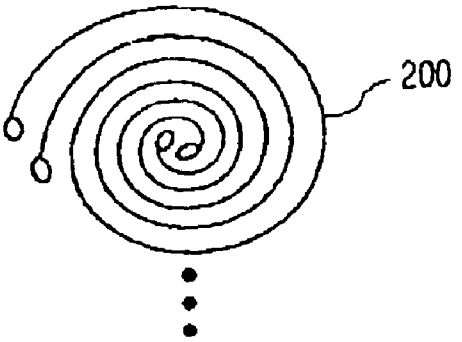

FIG. 1B

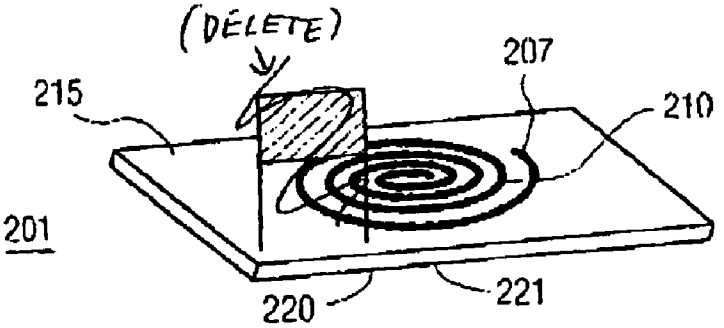

FIG. 2A

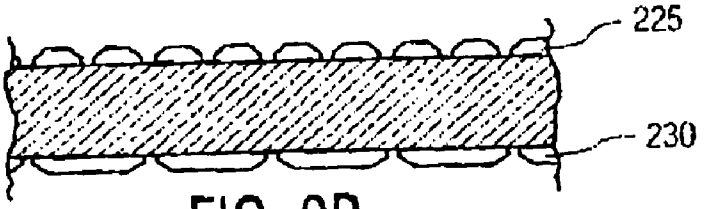

FIG. 2B

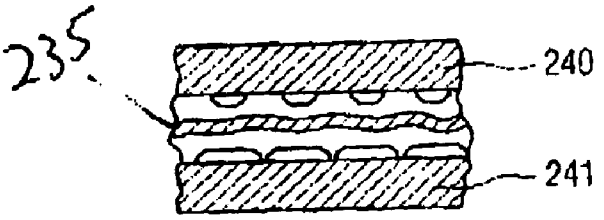

FIG. 2C

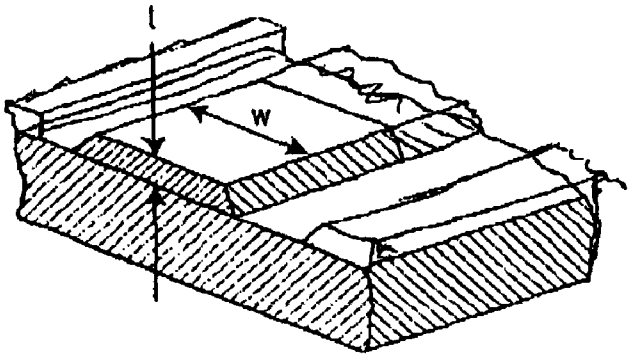

FIG. 3

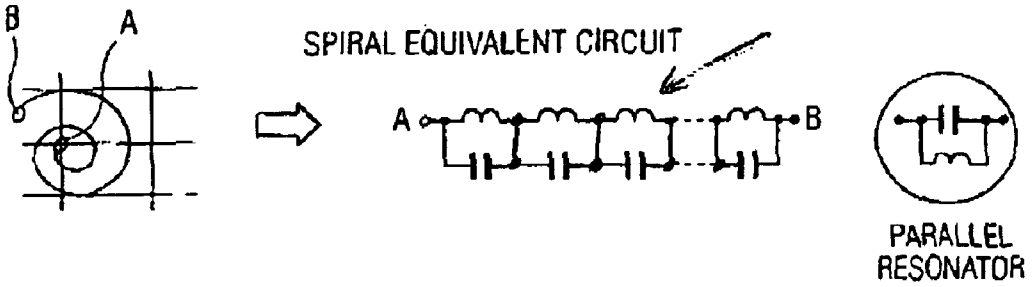

FIG. 4

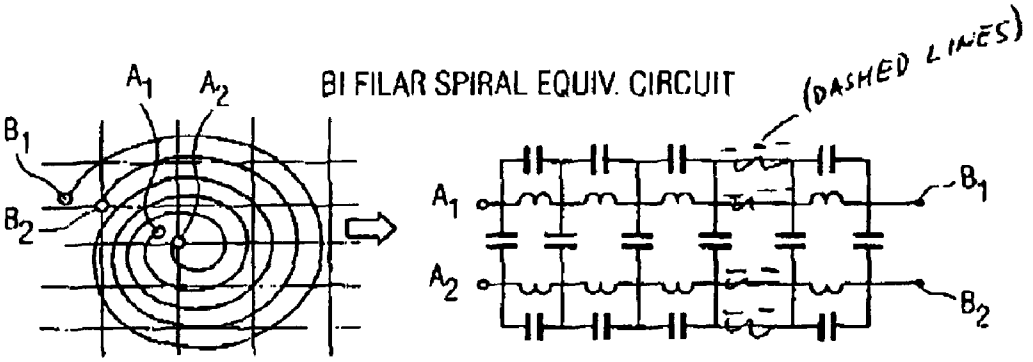

FIG. 5

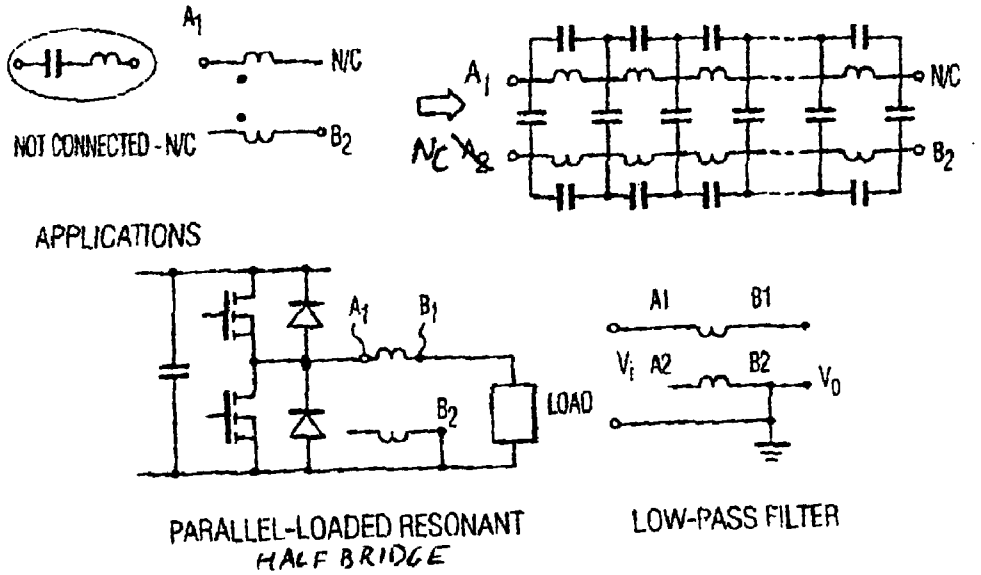
A1
N/C
NOT CONNECTED - N/C
B2
A1
N/C
NC
A2
B2
APPLICATIONS
A1
B1
B2
LOAD
A1
B1
Vi
A2
B2
V0
PARALLEL-LOADED RESONANT
HALF BRIDGE
LOW-PASS FILTER

FIG. 6

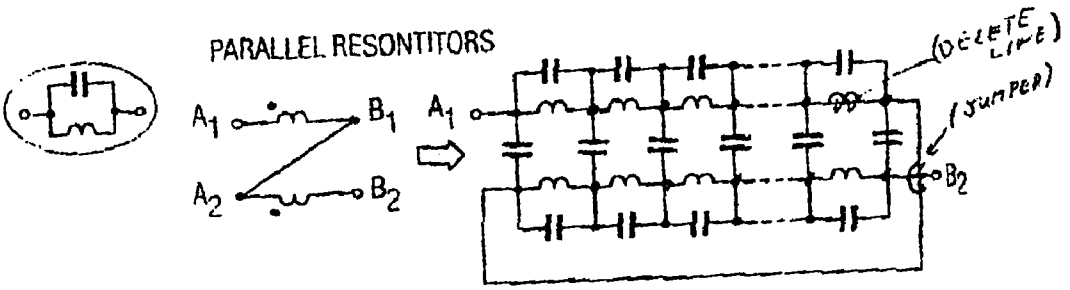
PARALLEL RESONTITORS
A1
B1
A2
B2
A1
B2
(DELETE LINE)
(JUMPER)

FIG. 7

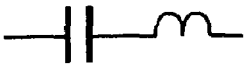

FIG. 8A

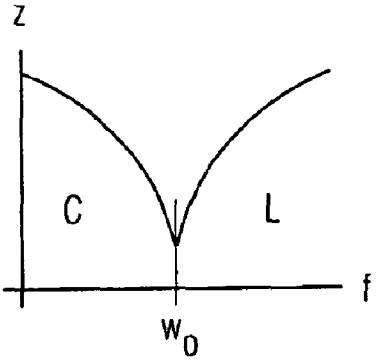

FIG. 8B

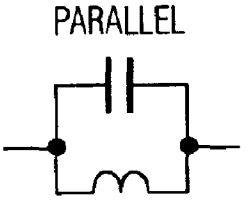

FIG. 8C

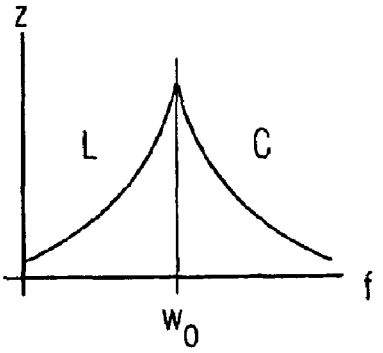

FIG. 8D

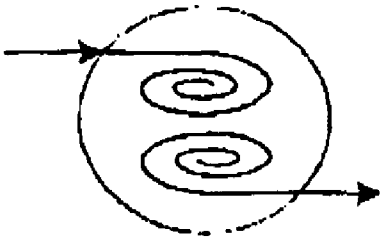

FIG. 8E

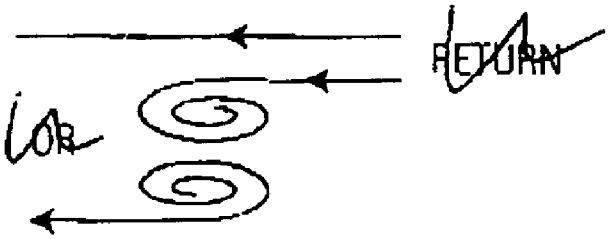

FIG. 8F

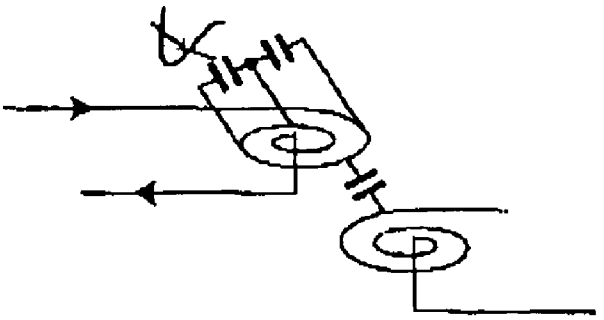

FIG. 8G

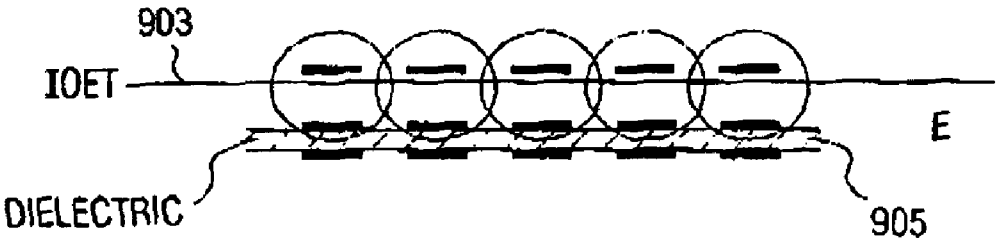

FIG. 9A

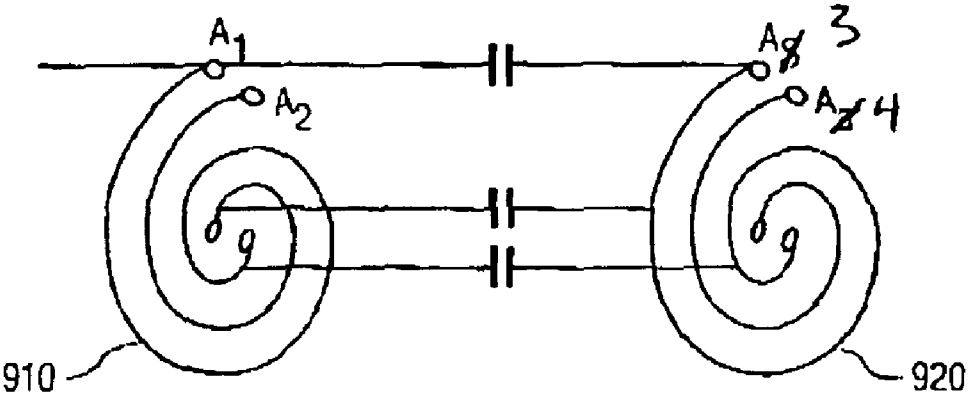

FIG. 9B

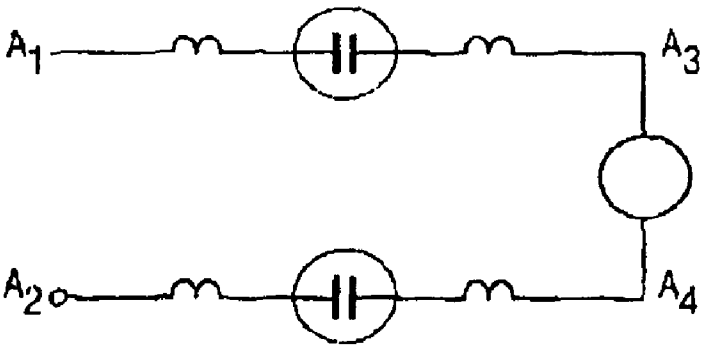

FIG. 9C

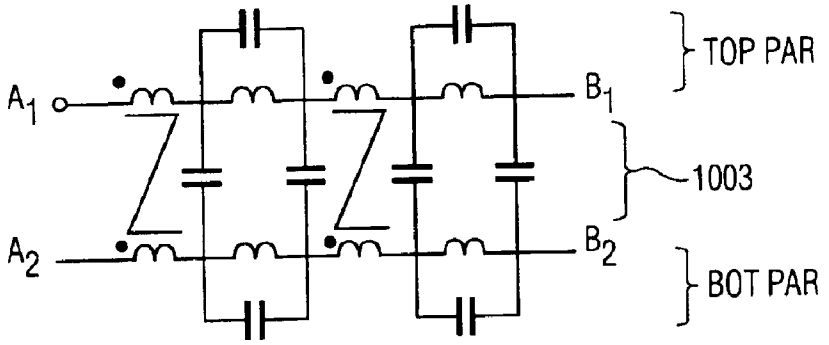

FIG. 10

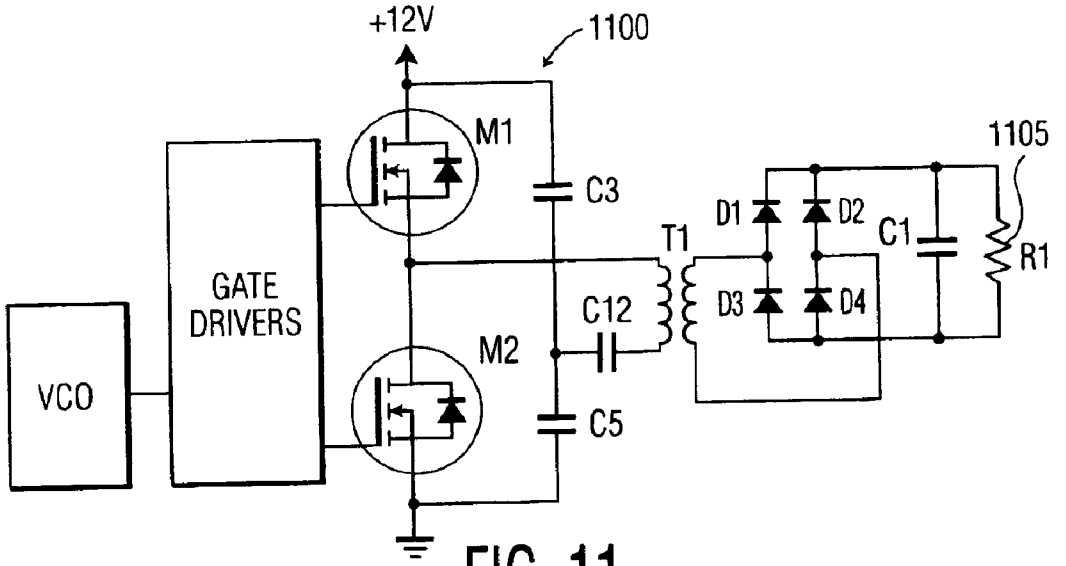

FIG. 11

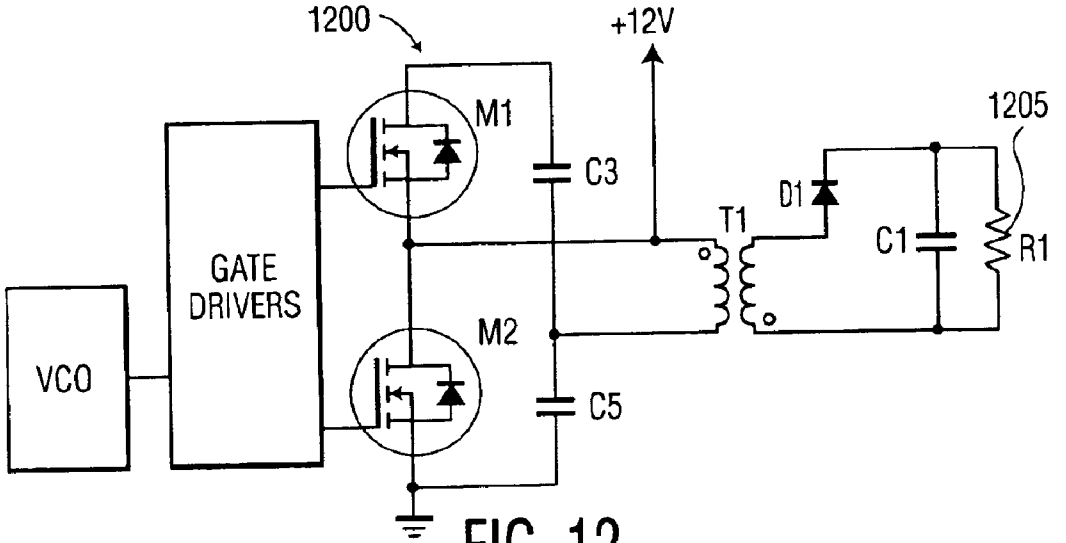

FIG. 12

PLANAR RESONATOR FOR WIRELESS POWER TRANSFER

FIELD OF THE INVENTION

The present invention is related to contactless power transfer systems. More particularly, the present invention is related to a planar resonator for wireless power transfer in a contactless power transfer system.

BACKGROUND AND SUMMARY OF THE INVENTION

Contactless power transfer has been used in applications such as the non-intrusive charging of pacemaker batteries, the charging of hybrid vehicle batteries, etc. In such applications, inductive coupling is used exclusively so that a current is induced from a power station to a load. In such systems, the power transfer is exclusively accomplished by means of coupling magnetic flux of the power station and the load.

For example, road systems that would encourage the use of electric vehicles have been studied by states such as California. In such a system, inductively coupled flat coils are embedded in the roadway, or cables that are embedded in the roadway are energized, so that an induction coil of the vehicle receives induced current from the roadway coils to permit battery charging and/or even propulsion. Typically such a system requires that the flux collection surface of the buried coil and the vehicle maintain a distance within five centimeters of each other to provide sufficient power transfer by induction.

U.S. Pat. No. 5,608,771 to Steigerwald et al. discloses a contactless power transfer system, wherein power is transferred from a stationary supply to a rotational load via the use of a rotary transformer. This system eliminates the brush and slip ring arrangements. The coupling in this type of system is also inductive.

Another arrangement is the use of a clamp-on link around a primary conductor that does not physically contact the conductor. The transfer of power is still via induction.

In a separate field, that of security identification, there are identification tags for persons and vehicles (such as the EZ-Pass, Smart-Tag and Fast Lane automatic toll collection systems on parts of Interstate 95 and certain bridges in tunnels from Boston to Virginia) that do not provide power transfer, but are used in a form of wireless communication. The security tags and toll collection tags include both inductive-coupled and capacitive-coupled transponders. The prior art lacks a system for contactless power transfer that includes capacitive-coupled functionality of electric flux, in addition to the inductive coupling of magnetic flux.

It would be advantageous to provide a planar resonator for wireless power transfer that allows power transfer over a non-magnetic, non-conductive, galvanically-isolated volume (material). The resonant component exhibits the characteristics of an integrated inductor-capacitor-transformer.

In a first aspect of the invention, a planar resonator includes a coil arranged in a single spiral configuration. However, when used in a multiple spiral configuration, the capacitance between the spirals can be used for energy transfer, resulting in a combination of electric and magnetic energy transference across an IOET. In another aspect, the spirals can be arranged on opposite sides of each other. The connection a can be wireless, for example, so that a battery of a cellphone could be charged without physical wires connecting the cellphone to a charger.

Depending on the physical arrangement and/or the materials used, the planar resonator stores both electric and magnetic energy for the purpose or impedance matching or accomplishing soft-switching in an attached switching power electronic converter circuit, in addition to transferring power across the interface-of-energy-transfer (hereafter "IOET") in either an electric or magnetic form, or both. The physical arrangement and/or materials used can permit transformer action with or without capacitive energy transfer, in addition to inductive energy storage, electrical (capacitive) energy storage or combinations thereof, such as magnetic transformer coupling with built-in LC resonant properties. The planar resonator does not necessarily use the IOET for energy transfer, for example, in a single coil configuration.

According to another aspect of the invention, an isolating coupling interface and a resonant tank are functionally integrated into a planar configuration for transferring power with isolation properties. The device may comprise two separable structures on either side of the IOET, such as, for example, a cellphone and its charger. Since there are no electrical contacts necessary at the IOET, the size of the entire charging circuit may be reduced while still complying with isolation specifications for safety standards such as IEC950. The physical structure may include a set of spiral coils on each side of the IOET, typically with each spiral being a conductor trace on a separate substrate, such as flex or printed circuit board (FR-4).

An advantage of the present invention is that it facilitates the use of wearable electronics. For example, flex circuits may be used so as to cause the surface of the coils to be flexible. In addition to the flexibility, the coils may be formed in any arbitrary shape to facilitate woven wire arranged in a fabric, or pads with embedded conductors that can be attached to clothes. In this way, for example, one could charge a radio, cellphone, and/or computer (just to name a few of the many wearable items) by bringing the device in close proximity to the fabric. Thus, implementation of the invention with wearable electronics could provide an interface between the wearable device(s) and external power sources. Digital or analog signals may also be transmitted across such interfaces to, for instance, up- or download digital information.

In another aspect of the invention, the IOET of the planar power resonator may have a thin and/or relatively flat top coil surface. In a wireless application, the IOET may be comprised of, for instance, (i) a non-conductive/dielectric film (for isolation) on the bottom of the top spiral(s), (ii) air; and (iii) a non-conductive/dielectric film (for isolation) on the top of the bottom spiral(s). The coils may be arranged in an upper and lower configuration substantially axially aligned. In addition, there can be an emulsifier at the bottom portion of an upper coil, with an air gap between the emulsifier and the top portion of the lower coil.

The spiral-shaped conductor may comprise pcb spiral-wound conductors. In addition, a battery charging circuit can be coupled to one of the first and second spiral-shaped conductors, and a load can be coupled to the other of the first and second spiral-shaped conductors. The coupling between battery charging circuit and the battery may comprise capacitive coupling and/or magnetic coupling, and wherein power is transferred by the coupling of an electric field and/or magnetic flux across the IOET.

According to an aspect of the present invention, a signal applied to the first spiral-shaped conductor can be transferred to the second spiral-shaped conductor by coupling of

magnetic flux of the first and second spiral-shaped conductors across the IOET.

The first and second spiral-shaped conductors and the IOET are preferably integrated into a planar (flat/thin) structure.

The planar resonator may further comprise a third spiral-shaped conductor arranged in a bi-filar spiral configuration with the first spiral-shaped conductor on the top surface of the IOET, and/or a fourth spiral-shaped conductor arranged in a bi-filar spiral configuration with the second spiral-shaped conductor on the bottom surface of the IOET. It should be understood that a bi-filar top and single bottom, or single top and bi-filar bottom are alternative arrangements. Equivalent series or parallel resonator operation can be accomplished by the absence or presence, respectively, of galvanic connections between these two spirals.

The bi-filar spiral configuration on the top surface and bottom surface of the IOET can be therefore be arranged to form a parallel resonator, or a series resonator.

In addition, instead of a bi-filar configuration, a plurality of spiral-shaped conductors can be arranged in a multi-filar configuration on the respective top or bottom surface. The spiral-shaped conductors can be configured so the planar resonator comprises a parallel resonator, or a series resonator.

The first plurality and second plurality of spiral-shaped conductors may be configured so the planar resonator comprises a parallel resonator, or a series resonator. There can be an arrangement wherein each coil forms a capacitor plate. In this arrangement the planar resonator acts as an inductor and capacitor series.

A bi-filar arrangement can also be obtained by a second film of dielectric material that separates the two spirals that form the bi-filar arrangement on one side of the IOET. (I.e. the dielectric film is on top of top spiral; another spiral rests on top of this dielectric film. This dielectric film stores electric energy and forms the capacitive part of the resonator, where the inductive part is obtained from the self-coupling of the set of spirals either side of the dielectric film.

Instead of a bi-filar arrangement, where the spirals are wound in the same direction, one of the spirals may have an opposite winding direction. Thus, the two spirals in this case would not lie in the same physical plane. This advantage can be exploited when it is necessary or desirable to have a flexible circuit, or when it might be desirable to have several layers of coils to increase the magnetic and electric capabilities of the resonator. Each of the above arrangements exhibit transmission line properties, some with multiple resonant frequencies. Electrical behavior may further be modeled by a distributed network of equivalent electrical resistors, capacitors, inductors and coupled inductors. The values of the distributed elements and thus the electrical behavior of the structure at its terminals, including resonant frequencies, impedance, gain and phase are controllable by choice of material properties and the geometric configuration of the spirals and interfaces.

BRIEF DESCRIPTION OF THE DRAWINGS

FIGS. **1**A and **1**B illustrate a basic spiral, and a bi-filar spiral arrangement that may be used in the present invention.

FIGS. **2**A and **2**B illustrate an embodiment of a planar resonator according to the present invention, and a cross sectional slice of the spirals and the IOET.

FIG. **2**C illustrates an alternative arrangement wherein the dielectric and spirals are arranged within substrate material **240**,**241**.

FIG. **3** is an illustration of a cross-sectional portion of a spiral wound around the IOET.

FIG. **4** illustrates the approximate equivalent circuit for the spiral arrangement shown in FIG. **1**A.

FIG. **5** illustrates an approximate equivalent circuit for the spiral arrangement shown in FIG. **1**B.

FIGS. **6** and **7** illustrate schematic arrangements of the spirals configured so that the present invention functions as a series resonator and a parallel resonator.

FIGS. **8**A and **8**B represent a schematic of a series configuration, a graph of impedance versus frequency, respectively. A typical impedance curve is plotted around the first resonant frequency, and L and C denotes that inductive or capacitive behavior are dominant, respectively.

FIGS. **8**C and **8**D represent a schematic of a parallel configuration, a graph of impedance versus frequency, and a sketch of the capacitance used for energy storage between two spiral coils.

FIGS. **8**E through **8**G illustrate different arrangements in which energy can enter and exit the configuration by means of electrical coupling.

FIGS. **9**A to **9**C illustrate a cross section of a planar resonator according to the present invention, a top view of two coils, and a reduced order equivalent circuit, respectively.

FIG. **10** illustrates equivalent top and bottom parallel resonator circuits, illustrating how the IOET functions across the resonators to transfer electrical power in the forms of electric and magnetic energy combined.

FIG. **11** is a schematic of an equivalent circuit of a series resonant battery charger according to the present invention.

FIG. **12** is a schematic of a flyback transformer according to the instant invention.

DETAILED DESCRIPTION OF THE INVENTION

The following description is provided for purposes of illustration, and not for limitation. There are many different configurations that are well within the spirit of the invention, and the scope of the appended claims.

FIGS. **1**A–**1**B illustrate variations of planar integrated resonators according to an aspect of the present invention. An integrated resonator is obtained by storing electric energy in a part of the time-energy function of a structure (geometry) that also stores magnetic energy in a part of the same function.

FIG. **1**A illustrates an example of a basic spiral **100**, whereas FIG. **1**B illustrates a bi-filar spiral **200**. Of course, it should be understood by persons of ordinary skill in the art that the present invention is not limited to spirals and bi-filar spirals, and may use any number of spiral wrappings (multi-filar) according to need. As shown in FIG. **2**A, the planar **200** has a spiral **210** wound on a top side of the interface-of-energy-transfer (IOET) **215**, and another spiral (not shown) is wound the bottom side **220** of the interface-of-energy-transfer (IOET). The axis, inner diameter and outer diameter of the spiral on the top side of the IOET correspond closely to the spiral on the bottom side of the IOET.

FIG. **2**B illustrates a cross section of the spiral **210** shown in FIG. **2**A. From this cross section, it can be seen that the spiral has conductors **225**, **230** separated by the IOET Configuring a the IOET layer between spirals that own a magnetic coupling coefficient, (i.e. sharing a common flux) permits the integrated resonator to store the electric energy

that is part of the time-energy function of the structure that stores the magnetic energy.

It should be noted that while FIG. **2**B shows an IOET having spiral conductors arranged on above and below, the IOET does not have to be the substrate, and as shown in FIG. **2**C, the IOET is arranged between substrate **240** and **241**. The two substrate materials are either side of interface **235**, along which they may be disjoined if **235** is an air gap.

The IOET may have $\mu>1$, or $E_r>1$, where: μ_r is the relative permeability of the material and

E_r is the relative permittivity of the material.

FIG. **3** shows an embodiment where multiple parallel spirals or multi-filar can be used. As shown in FIG. **3**A "w" equals the width and "t" equals the thickness. The number of turns of the spirals and their dimensions, as well as connection and rotation directions may be configured to achieve series, parallel, or a series/parallel combination circuit.

FIGS. **4**, **5**, **6**, and **7** illustrate arrangements of the spirals using notation such as A and B to distinguish between individual spirals, and their equivalent circuits. For example, FIG. **4** is the approximate equivalent circuit for FIG. **1**A, which may be further reduced as a first approximation into an equivalent lumped capacitor and equivalent lumped inductor.

It should be noted that, for example, a more complex equivalent circuit model may include a transformer, and the complexity of such a model may be extended to include higher order effects by considering it as a transmission line network.

With regard to FIGS. **6** and **7**, these drawings illustrate a series resonator and a parallel resonator, respectively. It should be noted in FIG. **6** that possible applications are a low-pass filter and a parallel-loaded resonant half-bridge.

With reference to FIGS. **8**A and **8**B, a typical impedance curve is plotted around the first resonant frequency, and L and C denotes that inductive or capacitive behavior are dominant, respectively.

The operation of the series planar resonator in this aspect of the present invention is as follows: When the frequency of operation is at a frequencies well below the configuration's self-resonant frequency, then there is larger amount of capacitance present between the each set of spirals, and the series resonator may, from an electric energy perspective, be considered a single-port network that behaves like a capacitor. As shown in FIG. **8**B, there is minimal impedance at ω, the resonant frequency. At higher frequencies, the capacitance distributes across the spiral windings and between spiral windings that own inductive characteristics, thus functioning as a two-port network that behaves more like a transmission line. While the simplest equivalent lumped-parameter circuit model comprises an equivalent inductance in series with an equivalent capacitance. A more complex and more accurate model also includes a transformer, and the complexity of such a model may be extended to include high order effects by considering it as a transmission line network.

With regard to FIGS. **8**C and **8**D, a simple equivalent circuit for a parallel resonator is shown. At frequencies of operation well be the resonant frequency, the parallel resonator behaves inductively, which can be as a two-port network. At frequencies of operation above the resonant frequency, the parallel resonator, and the parallel resonator may, from an electric energy perspective, be considered a single-port network that behaves like a capacitor. The impedance is at a maximum at the resonant frequency.

In addition, as shown in FIGS. **8**E through **8**G, different ways to provide a path for receiving energy and returning energy are provided.

FIG. **9**A illustrates that the IOET **903** of the present invention is broader than embodiments of a board separating two coils. As shown in the example in FIGS. **9**A and **9***b*, the IOET is a space between the two spirals, acting as an air coil transformer. As shown in FIG. **9**B, there is a capacitance between the coils, which can be utilized for energy transfer, FIG. **9**C illustrates an equivalent circuit showing the path from A**1** through A**4** shown in FIG. **9**B. The significance of the IOET being a space between the coils is that, for example, a wireless connection may be made, such as a wireless battery charger. In one particular example, the battery of a device (i.e. a cellphone) could be recharged without using a physical wire to connect the energy source to the coil transfer energy to the battery. Wireless coupling permits this feature, provided that the frequency of the energy transmitted and the coils, are chosen so that there is, for example, a capacitive coupling between the battery and charger.

FIG. **10** illustrates an equivalent circuit of top and bottom parallel resonators. It should be understood that the IOET **1003** is not a collection of discrete capacitors, rather is the capacitance across the IOET between the top and bottom resonators. At high enough frequencies, the energy transfer will be in the form of electrical energy across the resonators. Thus capacitive coupling is achieved to permit electrical energy transfer.

FIG. **11** is a schematic of an equivalent circuit of a series resonant battery charger according to the present invention. This particular battery charger has a level shifter, but it is possible to use a charger without a level shifter.

In this circuit, a different spiral transformer may be used. Each spiral transformer may be modeled as one having its own leakage inductance Ls and magnetizing inductance Lm, thus a proper resonant capacitance (Cr) can be calculated or simulated for a given load specification. In the measurement, the resonant capacitance was manually adjusted for the used spiral transformer. The board can be reconfigured as a flyback topology with active clamp (shown in FIG. **12**), when the input DC is supplied from the node between C**3** and C**5**, resonant capacitor C**2** and rectification diode D**4** are shorted, and D**2** and D**4** are taken away.

FIG. **12** is a schematic of a flyback transformer according to the instant invention. One experiment was done to see if the flyback topology can be used instead of the series resonant topology. There are a number of advantages of using the flyback topology:

One Schottky diode is needed instead of 4 for the series resonant charger in FIG. **10**;

Less (significant) loss from rectification diode(s);

Fixed frequency operation with duty cycle control;

No resonant capacitor is needed;

Charger universality may be more easily achieved without resonant capacitor.

In the examples shown in FIGS. **11** and **12**, it should be understood that many variations are possible that are still within the spirit of the invention and the scope of the appended claims.

The design parameters of the planar resonator include, but are not limited to, the physical dimensions, including aspect ratios, relative lengths, conductor thickness, material characteristics, such as permittivity (or dielectric constant), permeability, loss tangents of materials including the media comprising the IOET; numbers of turns of spirals.

In addition, the planar resonator can include means for a connection with, or be provided with a connection to a battery charger.

Various modifications may be made to the instant invention that lie within the spirit of the invention and the scope of the appended claims. For example, the number of layers of the resonator, the type of IOET surface, the number and thickness of spirals, illustrating an attachment to, for example, a battery, etc. can all be modified from the structures illustrated in the drawings and described in the specification. The arrangement of the coils may occupy more than one plane, particularly when a resonator arrangement is woven into fabric.

What is claimed is:

1. A planar resonator comprising:

a first coiled conductor arranged on a substrate; and

a second coiled conductor having a vertical axis aligned with said first coiled conductor, and electrically insulated from the first coiled conductor;

the first and second coiled conductors being wound in a common direction, without any other conductors between the first and second conductors and having a predetermined self-resonant frequency,

wherein:

a capacitance between the first and second conductors permits energy transfer between the first and second coiled conductors, and

the arrangement of the coiled conductors comprises a series resonant configuration.

2. The planar resonator of claim **1**, wherein:

the first and second coiled conductors include first and second PCB spiral conductors, respectively, and wherein the first and second spiral conductors and the substrate are integrated into a planar structure.

3. The planar resonator of claim **2**, wherein

a signal applied to the first coiled conductor is transferred to the second coiled conductor by coupling of magnetic flux of the first and second spiral conductors.

4. The planar resonator of claim **3**, including a third coiled conductor arranged in a bi-filar spiral configuration with the first coiled conductor on a top surface of the substrate, and wherein the second coiled conductor is arrange on a bottom surface of the substrate.

5. The planar resonator of claim **4**, wherein the bi-filar spiral configuration on the top surface and the second coiled conductor on the bottom surface of the substrate forms a series-parallel resonator.

6. The planar resonator of claim **4**, wherein the first and third coiled conductors are coupled in series.

7. The planar resonator of claim **2**, including a third coiled conductor arranged in a bi-filar spiral configuration with the first coiled conductor on a top surface of the substrate.

8. The planar resonator of claim **7**, including a fourth coiled conductor arranged in a bi-filar spiral configuration with the second coiled conductor on a bottom surface of the substrate.

9. The planar resonator of claim **8**, wherein the second and fourth coiled conductors are coupled in parallel.

10. The planar resonator of claim **8**, wherein the second and fourth coiled conductors are coupled in series.

11. The planar resonator of claim **7**, wherein the first and third coiled conductors are coupled in parallel.

12. The planar resonator of claim **1**, including

a battery charging circuit coupled to one of the first and second coiled conductors.

13. The planar resonator of claim **12**, wherein

a load is coupled to the other of the first and second coiled conductors.

14. The planar resonator of claim **13**, wherein:

the load is magnetically coupled to the other of the first and second coiled conductors, and

power is transferred from the battery charging circuit to the load by magnetic flux.

15. The planar resonator of claim **1**, including:

a first plurality of coiled conductors, including the first coiled conductor, arranged on a top surface of the substrate in a serial configuration, and

a second plurality of coiled conductors, including the second coiled conductor, arranged on a bottom surface of the substrate in a serial configuration.

16. The planar resonator of claim **15**, wherein the first plurality and second plurality of coiled conductors are configured as a series-parallel resonator.

17. The planar resonator of claim **1**, wherein

the substrate includes one of:

a non-conductive dielectric film on a bottom surface of the first coiled conductor,

a non-conductive dielectric film on a top surface of the second coiled conductor, and

an emulsifier spaced from the bottom surface of the first coiled conductor by an air gap.

18. A planar power resonator comprising

a pair of flat coiled conductors having an air gap in between,

a first coiled conductor of the pair of coiled conductors being in contact with dielectric, said first coiled conductor including means for coupling to a electric source; and

a second coiled conductor of the pair of coiled conductors being vertically aligned with the first coiled conductor, and electrically insulated from the first coiled conductor,

the first and second conductors being wound in a common direction,

said second coiled conductor including means for coupling with a load,

wherein a capacitance between the pair of coiled conductors permits energy transfer from the first coiled conductor to the second coiled conductor to form a series resonant circuit.

19. The planar resonator of claim **18**, wherein:

the means for coupling to the electric source is coupled to a battery charger, and

the means for coupling with the load is coupled to a battery for wireless battery charging.

20. A planar resonator comprising:

an interface of energy transfer (IOET), said IOET having a top surface and bottom surface;

a first spiral-shaped conductor arranged on the top surface of said IOET;

a second spiral-shaped conductor arranged on the bottom surface of said IOET, said second spiral-shaped conductor having a vertical axis aligned with said first spiral-shaped conductor;

a first substrate material arranged on the top surface of the IOET; and

a second substrate material arranged on the bottom surface of the IOET,

wherein

the second spiral-shaped conductor is electrically insulated from the first spiral-shaped conductor and wound

in a common direction as the first spiral-shaped conductor, and

the IOET and the first and second spiral-shaped conductors have a predetermined self-resonant frequency.

21. The planar resonator of claim **20**, including

a battery charging circuit coupled to one of the first and second spiral-shaped conductors.

22. A method for providing a planar power resonator for contactless power transfer comprising:

(a) providing an interface of energy transfer (IOET), said IOET having a top surface and bottom surface;

(b) arranging a first spiral-shaped conductor on the top surface of said IOET; and

(c) arranging a second spiral-shaped conductor on the bottom surface of said IOET so that said second spiral-shaped conductor has a vertical axis in alignment with said first spiral-shaped conductor, and having a winding direction common with the first spiral-shaped conductor,

wherein:

the IOET and the first and second spiral-shaped conductors are selected to have a predetermined self-resonant frequency; and

the first and second spirals are electrically insulated from each other and arranged in a series resonator arrangement.

23. The method of claim **22**, wherein:

arranging the first spiral-shaped conductor includes arranging a first plurality of spiral-shaped conductors in a multi-filar spiral configuration with the first spiral-shaped conductor on the top surface of the IOET, and

arranging the second spiral-shaped conductor includes arranging a second plurality of spiral-shaped conductor in a multi-filar spiral configuration with the second spiral-shaped conductor on the bottom surface of the IOET.

24. The method of claim **23**, wherein the first plurality second plurality of spiral-shaped conductors are configured as a series-parallel resonator.

25. The method of claim **22**, wherein:

arranging the first spiral-shaped conductor includes arranging third spiral-shaped conductor in a bi-filar spiral configuration with the first spiral-shaped conductor on the top surface of the IOET, and

arranging the second spiral-shaped conductor includes arranging a fourth spiral-shaped conductor in a bi-filar spiral configuration with the second spiral-shaped conductor on the bottom surface of the IOET.

* * * * *