US 20030143963A1

(19) United States

(12) Patent Application Publication (10) Pub. No.: US 2003/0143963 A1

Pistor et al. (43) Pub. Date: Jul. 31, 2003

(54) ENERGY SELF-SUFFICIENT RADIOFREQUENCY TRANSMITTER

(76) Inventors: **Klaus Pistor**, Linden (DE); **Frank Schmidt**, Zorneding (DE)

Correspondence Address:
LERNER AND GREENBERG, P.A.
PATENT ATTORNEYS AND ATTORNEYS AT LAW
Post Office Box 2480
Hollywood, FL 33022-2480 (US)

(21) Appl. No.: **10/304,121**

(22) Filed: **Nov. 25, 2002**

Related U.S. Application Data

(63) Continuation of application No. PCT/DE01/01965, filed on May 21, 2001.

(30) **Foreign Application Priority Data**

May 24, 2000 (DE) 100 25 561.2

Publication Classification

(51) **Int. Cl.**[7] **H04B 1/04**

(52) **U.S. Cl.** **455/127**; 455/91

(57) **ABSTRACT**

The energy self-sufficient radiofrequency transmitter has at least one electromechanical transducer with a rectifier circuit connected downstream and with a voltage converter circuit. A logic circuit configuration is connected to the voltage converter circuit. The logic circuit configuration has a sequence controller a memory in which an identification code is stored. The energy self-sufficient radiofrequency transmitter also has a radiofrequency transmission stage that is connected to the logic circuit configuration and a transmission antenna.

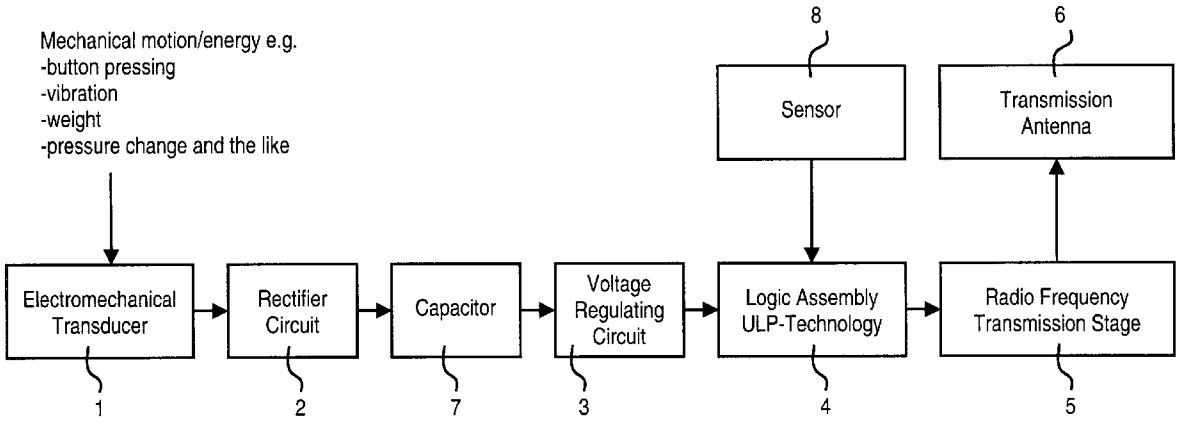

SAMSUNG EXHIBIT 1065

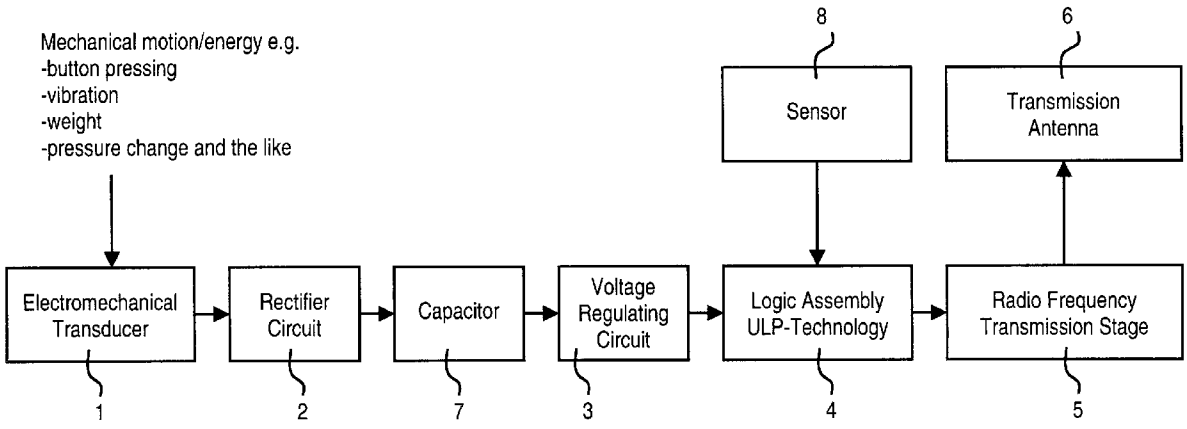
Mechanical motion/energy e.g.
-button pressing
-vibration
-weight
-pressure change and the like
Electromechanical Transducer
1
Rectifier Circuit
2
Capacitor
7
Voltage Regulating Circuit
3
Logic Assembly ULP-Technology
4
Sensor
8
Radio Frequency Transmission Stage
5
Transmission Antenna
6

ENERGY SELF-SUFFICIENT RADIOFREQUENCY TRANSMITTER

CROSS-REFERENCE TO RELATED APPLICATION

[0001] This application is a continuation of copending International Application No. PCT/DE01/01965, filed May 21, 2001, which designated the United States and was not published in English.

BACKGROUND OF THE INVENTION

Field of the Invention

[0002] The invention relates to an energy self-sufficient radiofrequency transmitter, the use thereof, and also to a method for the energy self-sufficient transmission of a radiofrequency signal.

[0003] Energy self-sufficient systems in which mechanical energy is converted into electrical energy using a piezoelectric transducer and then rectified are known in the prior art. The electrical energy is used to drive simple resonant circuits.

SUMMARY OF THE INVENTION

[0004] It is accordingly an object of the invention to provide an energy self-sufficient radiofrequency transmitter and a method for the energy self-sufficient transmission of a radiofrequency signal that enable the communication of information to be improved.

[0005] With the foregoing and other objects in view there is provided, in accordance with the invention, an energy self-sufficient radiofrequency transmitter, including: at least one electromechanical transducer; a rectifier circuit connected downstream from the transducer; a voltage converter circuit; a logic circuit configuration connected to the voltage converter circuit; a radiofrequency transmission stage connected to the logic circuit configuration; and at least one transmission antenna. The logic circuit configuration includes a sequence controller and a memory for storing an identification code.

[0006] In accordance with an added feature of the invention, the electromechanical transducer includes at least one piezoelectric element.

[0007] In accordance with an additional feature of the invention, the piezoelectric element is a bending transducer.

[0008] In accordance with another feature of the invention, the electromechanical transducer includes at least one induction coil.

[0009] In accordance with a further feature of the invention, the voltage converter circuit includes an energy storage element.

[0010] In accordance with another added feature of the invention, the voltage converter circuit can be operated in a clocked manner.

[0011] In accordance with another additional feature of the invention, there is provided, at least one capacitor for storing energy. The capacitor is connected between the rectifier circuit and the voltage regulating circuit.

[0012] In accordance with a further added feature of the invention, the logic circuit configuration includes at least one component selected from a group consisting of at least one microprocessor and an ASIC.

[0013] In accordance with a further additional feature of the invention, there is provided, at least one sensor connected to the logic circuit configuration.

[0014] In accordance with yet an added feature of the invention, the logic circuit configuration is embodied using ULP technology.

[0015] In accordance with yet an additional feature of the invention, the logic circuit configuration has clock generator including an LC resonant circuit or an RC resonant circuit.

[0016] In accordance with yet another feature of the invention, the radiofrequency transmission stage is constructed for transmitting a radiofrequency signal having a frequency of greater than 1 MHz.

[0017] In accordance with yet a further feature of the invention, the radiofrequency transmission stage is constructed for transmitting a radiofrequency signal having a frequency between 100 MHz and 30 GHz.

[0018] In accordance with yet a further added feature of the invention, the radiofrequency signal can have a bandwidth of more than 100 kHz.

[0019] In accordance with yet another added feature of the invention, a delay device is connected between the logic circuit configuration and the transmission antenna.

[0020] With the foregoing and other objects in view there is provided, in accordance with the invention, a method for energy self-sufficiently transmitting a radiofrequency signal. The method includes: using an electromechanical transducer to convert a mechanical movement into a voltage signal; obtaining a rectified voltage signal by rectifying the voltage signal; converting the rectified voltage signal to produce a voltage level that is constant at least in sections; after converting the rectified signal, using the rectified voltage signal to supply energy to at least one logic circuit configuration; using the logic circuit configuration to communicate at least one identification code to a radiofrequency transmission stage; and using the radiofrequency transmission stage and a transmission antenna to radiate a radiofrequency signal containing the identification code.

[0021] In accordance with an added mode of the invention, the step of using the logic circuit configuration to communicate the identification code to the radiofrequency transmission stage includes: reading out the identification code from a memory of the logic circuit configuration; generating a transmission telegram including the identification code; activating the radiofrequency transmission stage; and modulating a radiofrequency oscillation with the transmission telegram.

[0022] In accordance with an additional mode of the invention, the method includes providing measurement data obtained from at least one sensor to the logic circuit configuration; and impressing the measurement data on the radiofrequency signal.

[0023] In accordance with another mode of the invention, the method includes radiating a plurality of radiofrequency

signals one after another; each one of the plurality of the radiofrequency signals having a complete information content.

[0024] In accordance with a further mode of the invention, the method includes variably setting a time interval of individual ones of the plurality of the radiofrequency signals with respect to one another.

[0025] In accordance with a further added mode of the invention, the method includes variably setting a frequency of individual ones of the plurality of the radiofrequency signals with respect to one another.

[0026] In accordance with a further additional mode of the invention, the method includes encrypting information of the radiofrequency signal.

[0027] In accordance with yet an added mode of the invention, the method includes differently encrypting a plurality of radiofrequency signals.

[0028] In accordance with yet an additional mode of the invention, the method includes radiating the radiofrequency signal in a time-delayed manner.

[0029] In accordance with another added mode of the invention, the method includes transmitting the radiofrequency signal with a bandwidth greater than 100 kHz.

[0030] In accordance with another additional mode of the invention, the method includes transmitting the radiofrequency signal with a frequency of greater than 1 MHz.

[0031] In accordance with a further mode of the invention, the method includes transmitting the radiofrequency signal with a frequency of between 100 MHz and 30 GHz.

[0032] To that end the radiofrequency transmitter has at least one electromechanical transducer with a rectifier circuit connected downstream and at least one voltage converter circuit. A logic circuit configuration is connected to the voltage converter circuit. The logic circuit configuration includes at least one sequence controller and a memory in which an identification code is stored. A radiofrequency transmission stage is connected to the logic circuit configuration and is controlled by the logic circuit configuration. The radiofrequency signals generated by the radiofrequency transmission stage are radiated by at least one transmission antenna.

[0033] An electromechanical transducer is understood to be a general component in which mechanical energy can be converted into electrical energy, for example, a piezo-electric, electrostrictive or magnetostrictive element or an electromagnetic induction coil.

[0034] The mechanical energy can be generated, for example, from:

[0035] a manual actuation of a switch, pushbutton or another operating element;

[0036] a directed mechanical force action, for example the opening or closing of windows or doors or stop switches in industrial installations;

[0037] a pressure change, for example in liquids or gases; or

[0038] a vibration, for example, on machines, wheels, vehicles.

[0039] The voltage generated by the transducer is rectified by the rectifier circuit and is then forwarded to a voltage converter. The voltage converter ensures that a constant voltage can be tapped off at least over a short period of time. As a result, voltage spikes are avoided, and moreover, the operating reliability is increased.

[0040] The connection between the rectifier and the voltage converter can be effected directly or via a current storage element that is additionally present, e.g. a capacitor. When a capacitor is present, by way of example, the downstream voltage converter can convert a typically exponentially falling charging voltage of the capacitor into a constant voltage at least for a short time. However, the converter can also store the electrical voltages itself.

[0041] Given the presence of a sufficient voltage signal for supplying energy to the logic circuit configuration, the logic circuit configuration communicates at least one identification code, and if appropriate, other information as well, for example sensor measurement signals, to the radio-frequency transmission stage. In the radiofrequency transmission stage, the voltage signal is used to generate a radiofrequency signal containing the identification code and to radiate it via the transmission antenna.

[0042] This method for the energy self-sufficient communication of signals has the advantage that the degree of utilization of the energy supplied by the transducer, with respect to the information density that can be emitted, is very high. Although such a system consumes a higher electrical energy per unit time compared with simple resonant circuits it is nonetheless possible to transmit a more than proportionally high information density per unit time relative thereto. Altogether, this results in a better utilization of the electrical energy made available by the transducer.

[0043] In order to achieve a high efficiency and a compact design, it is advantageous if the electromechanical transducer contains at least one piezoelement, in particular a piezoelectric bending transducer.

[0044] It is also preferred, e.g. in order to achieve an inexpensive construction, if the electromechanical transducer contains at least one induction coil.

[0045] In order to ensure a sufficiently long energy supply, it is advantageous if at least one energy storage element, e.g. in the form of a capacitor, for storing current is present between the rectifier circuit and the voltage converter circuit.

[0046] In order to increase the efficiency, it is favorable, moreover, if the voltage converter circuit is equipped with a further energy storage element. In particular, this is favorable if the voltage converter circuit is operated in a clocked manner.

[0047] It is additionally favorable if the logic circuit configuration is connected to at least one sensor. As a result, in addition to the identification code, measurement data from the at least one sensor can also be acquired or read out by the logic circuit configuration and the measurement data can be impressed on the radiofrequency signal.

[0048] It is also advantageous if, given a voltage supply over a sufficiently long time, a plurality of radiofrequency signals with complete information content are radiated one after the other, because this redundancy creates an increased communication reliability.

[0049] For increased security against interception, it is advantageous if the information of the radiofrequency signal is encrypted, typically by an encryption logic integrated into the logic circuit configuration. As a result, it is also possible to increase the transmission reliability by inputting individual keys, for example for access control purposes. In particular, when transmitting a plurality of radiofrequency signals, it is favorable if each of the radiofrequency signals is encrypted differently, e.g. with a different key.

[0050] Moreover, in order to suppress a transmission disturbance, it is favorable if, when transmitting a plurality of radiofrequency signals, their time interval with respect to one another is variable and/or the frequency of the individual radiofrequency signals differs.

[0051] Likewise for the purpose of increased transmission reliability, in particular in environments with a plurality of radiofrequency transmitters, it is advantageous if the radiation of the radiofrequency signal is time-delayed, for example by the variable, e.g. statistical, setting of a delay. The delay can be realized, for example, in the software of the logic circuit configuration. Using radiofrequency transmitters with in each case a statistically distributed delay time of their delay devices makes it possible to increase the transmission probability.

[0052] In order to reduce the energy consumption of the radiofrequency transmitter, it is advantageous if the logic circuit configuration is embodied using ultra low power technology (ULP technology).

[0053] It is advantageous if the logic circuit configuration contains a microprocessor or an ASIC (Application-Specific Integrated Circuit) module.

[0054] Typically, part of the electrical energy provided by the transducer is used to run up the logic circuit configuration into an operating state. To that end, an oscillating crystal is normally provided as a clock generator. For shortening the time for running up the logic circuit configuration, it is favorable if, instead of an oscillating crystal, an LC resonant circuit or an RC resonant circuit is present as the clock generator.

[0055] In order to achieve a high data transmission rate, it is advantageous if a signal with a frequency of >1 MHz is transmitted using the radiofrequency transmission stage. By way of example, frequencies F of between 100 MHz and 30 GHz are realized in technology nowadays. However, there is no fundamental upper limit for the frequency.

[0056] In order to achieve a high data throughput within a short time, it is advantageous if the bandwidth of the radiofrequency signal is at least 100 KHz.

[0057] It is preferred if, during a transmission cycle, the logic circuit configuration:

[0058] reads out the identification code, for example, from a memory of the logic circuit configuration;

[0059] generates a transmission telegram containing at least the identification code, and if appropriate, other information, for example, measurement data from sensors;

[0060] activates the radiofrequency transmission stage; and

[0061] modulates the transmission telegram onto the radiofrequency oscillation, and if appropriate, encrypts it and/or subjects it to a time delay.

[0062] The use of the radiofrequency transmitter is particularly advantageous in traffic technology, in particular automotive technology and rail technology, and/or in building technology, in particular installation technology, for example for controlling domestic appliances, electrical installations or for access control purposes.

[0063] Individual aspects of using the radiofrequency transmitter will now be described in more detail schematically using a mechanically fed light switch as an application. It goes without saying, however, that the invention is not restricted to this specific application.

[0064] a) voltage generation:

[0065] To generate voltage, i.e. to convert mechanical energy into electrical energy, a piezoelectric bending transducer is used which, e.g. in the case of a force action of 5 N, experiences a flexure of 5 mm and builds up a resulting electrical voltage of 50 V across its inherent capacitor of 50 nF. Transducers with these parameters are known in the prior art and match a commercially available light switch well in terms of the dimensions and mechanical requirements.

[0066] b) Voltage conditioning:

[0067] Voltage stabilization is obtained by using a prior art voltage converter with a high efficiency and a high input voltage dynamic range. If the charging voltage across the capacitor then falls during operation e.g. from 20 V to 5 V, the stabilization circuit provides a constant 3 V at the output.

[0068] c) Energy consideration:

[0069] The following energy consideration is intended to show that it is possible to operate a processor circuit and a radiofrequency transmitter for a short time with the energy generated in our exemplary embodiment:

[0070] Let the electrical energy in the bending transducer be $E=\frac{1}{2}\,C\cdot U^2=\frac{1}{2}\,50\cdot 10^{-9}\cdot 50^2$ [V^2 As/V]=62.5 2 μWs, and approximately 50 μWs thereof remain given 80% efficiency of the transducer. An electronic circuit requiring e.g. approximately 20 mW (3 V and 6.6 mA) can thus be operated for a time duration of t=50 μWs/20 mW=2.5 ms.

[0071] d) Transmission rate and volume of data:

[0072] If a modulation rate of the radiofrequency transmitter of 100 Kbits/s is assumed, then data with a scope of approximately 250 bits can be emitted in this time. This volume of data suffices for encrypting the identity of the switch and also affords the possibility of increasing the transmission reliability by repeated emission or the application of correlation methods. Moreover, the use of the logic circuit configuration, typically a microprocessor or an ASIC, allows encryption of the data to be transmitted.

[0073] e) Radiofrequency transmitter:

[0074] The radiofrequency transmitter is based on a power of 1 mW, which suffices to reliably transmit data to every point within a private residence. In this case, a typical scenario is that all the switches, for example light switches, upon actuation, emit one or a plurality of radiofrequency

telegrams which are received by a single receiver and the latter initiates the corresponding actions (lamp on/off, dimming of lamp, etc.).

[0075] It goes without saying that the energy self-sufficient radiofrequency transmitter is not restricted to an application in building technology, but rather can be used universally. Examples of possible fields of application are switch applications such as manually actuated emergency transmitters, access authorization interrogations, remote controls, other switches, limit switches in industry, traffic, in private households, in meters for water, gas and electricity, as motion detectors, animal monitoring, break-in/theft protection, and generally in automotive technology for reducing the wiring harness in motor vehicles, or in railroad systems.

[0076] An example of an appropriate sensor system application is a sensor for temperature, pressure, force and other measurement quantities, in particular for measuring automobile tire pressure and temperature, axle temperature and accelerations on trains, and the temperature or pressure force of motors and installations in industry.

[0077] Other features which are considered as characteristic for the invention are set forth in the appended claims.

[0078] Although the invention is illustrated and described herein as embodied in an energy self-sufficient radiofrequency transmitter, it is nevertheless not intended to be limited to the details shown, since various modifications and structural changes may be made therein without departing from the spirit of the invention and within the scope and range of equivalents of the claims.

[0079] The construction and method of operation of the invention, however, together with additional objects and advantages thereof will be best understood from the following description of specific embodiments when read in connection with the accompanying drawings.

BRIEF DESCRIPTION OF THE DRAWING

[0080] The sole drawing FIGURE schematically shows the different functional units of the radiofrequency transmitter.

DESCRIPTION OF THE PREFERRED EMBODIMENTS

[0081] Referring now to the sole drawing FIGURE in detail, there is shown an electromechanical transducer **1**, preferably a piezoelectric bending transducer or an induction coil that enables mechanical energy to be utilized for charge separation and thus for voltage generation. The mechanical energy originates for example from a mechanical force action, (e.g. button pressing) from a pressure change or a vibration. The voltage generated is used to charge a capacitor **7** via a rectifier circuit **2**. Alternatively, direct feeding of the voltage regulating circuit **3** is also possible, and by way of example, the transducer **1** can store the charges itself. The downstream voltage conversion is advantageous in order to generate, from the exponentially falling charging voltage of the capacitor **7**, a voltage that is constant over a short period of time for operating the downstream electronics.

[0082] The constant voltage is used to activate and supply the downstream logic circuit configuration **4** and radiofrequency transmission stage **5** as long as the stored energy permits this. The logic circuit configuration **4** contains a microprocessor sequence controller, a memory in which the identity of the measurement location or of the switch is stored, and (optionally) sensor inputs via which one or a plurality of sensors **8** can be connected.

[0083] If a supply voltage is available due to a mechanical energy feed, then the following processor-controlled sequence is initiated:

[0084] a) reading-out the identification code;

[0085] b) reading-out the connected sensors **8** (optional);

[0086] c) encrypting the data (optional);

[0087] d) generating a transmission telegram containing the identification code;

[0088] e) activating the radiofrequency transmission stage **5**; and

[0089] f) modulating the radiofrequency oscillation with the transmission telegram (optionally a number of times as long as sufficient energy is available or until a different termination criterion is reached).

[0090] The radiofrequency transmission stage **5** generates a radiofrequency oscillation that is radiated via the transmission antenna **6**. The transmission telegram generated by the logic circuit configuration **4** is modulated onto the oscillation.

We claim:

1. An energy self-sufficient radiofrequency transmitter, comprising:

at least one electromechanical transducer;

a rectifier circuit connected downstream from said transducer;

a voltage converter circuit;

a logic circuit configuration connected to said voltage converter circuit, said logic circuit configuration including a sequence controller and a memory for storing an identification code;

a radiofrequency transmission stage connected to said logic circuit configuration; and

at least one transmission antenna.

2. The energy self-sufficient radiofrequency transmitter according to claim 1, wherein said electromechanical transducer includes at least one piezoelectric element.

3. The energy self-sufficient radiofrequency transmitter according to claim 2, wherein said piezoelectric element is a bending transducer.

4. The energy self-sufficient radiofrequency transmitter according to claim 1, wherein said electromechanical transducer includes at least one induction coil.

5. The energy self-sufficient radiofrequency transmitter according to claim 1, wherein said voltage converter circuit includes an energy storage element.

6. The energy self-sufficient radiofrequency transmitter according to claim 5, wherein said voltage converter circuit can be operated in a clocked manner.

7. The energy self-sufficient radiofrequency transmitter according to claim 1, comprising at least one capacitor for

storing energy; said capacitor connected between said rectifier circuit and said voltage regulating circuit.

8. The energy self-sufficient radiofrequency transmitter according to claim 1, wherein said logic circuit configuration includes at least one component selected from a group consisting of at least one microprocessor and an ASIC.

9. The energy self-sufficient radiofrequency transmitter according to claim 1, comprising at least one sensor connected to said logic circuit configuration.

10. The energy self-sufficient radiofrequency transmitter according to claim 1, wherein said logic circuit configuration is embodied using ULP technology.

11. The energy self-sufficient radiofrequency transmitter according to claim 1, wherein said logic circuit configuration has clock generator including an LC resonant circuit or an RC resonant circuit.

12. The energy self-sufficient radiofrequency transmitter according to claim 1, wherein said radiofrequency transmission stage is constructed for transmitting a radiofrequency signal having a frequency of greater than 1 MHz.

13. The energy self-sufficient radiofrequency transmitter according to claim 12, wherein said radiofrequency transmission stage is constructed for transmitting a radiofrequency signal having a frequency between 100 MHz and 30 GHz.

14. The energy self-sufficient radiofrequency transmitter according to claim 12, wherein the radiofrequency signal can have a bandwidth of more than 100 kHz.

15. The energy self-sufficient radiofrequency transmitter according to claim 1, comprising a delay device connected between said logic circuit configuration and said transmission antenna.

16. A method for energy self-sufficiently transmitting a radiofrequency signal, which comprises:

using an electromechanical transducer to convert a mechanical movement into a voltage signal;

obtaining a rectified voltage signal by rectifying the voltage signal;

converting the rectified voltage signal to produce a voltage level that is constant at least in sections;

after converting the rectified signal, using the rectified voltage signal to supply energy to at least one logic circuit configuration;

using the logic circuit configuration to communicate at least one identification code to a radiofrequency transmission stage; and

using the radiofrequency transmission stage and a transmission antenna to radiate a radiofrequency signal containing the identification code.

17. The method according to claim 16, wherein the step of using the logic circuit configuration to communicate the identification code to the radiofrequency transmission stage includes:

reading out the identification code from a memory of the logic circuit configuration;

generating a transmission telegram including the identification code;

activating the radiofrequency transmission stage; and

modulating a radiofrequency oscillation with the transmission telegram.

18. The method according to claim 16, which comprises:

providing measurement data obtained from at least one sensor to the logic circuit configuration; and

impressing the measurement data on the radiofrequency signal.

19. The method according to claim 16, which comprises radiating a plurality of radiofrequency signals one after another; each one of the plurality of the radiofrequency signals having a complete information content.

20. The method according to claim 19, which comprises variably setting a time interval of individual ones of the plurality of the radiofrequency signals with respect to one another.

21. The method according to claim 19, which comprises variably setting a frequency of individual ones of the plurality of the radiofrequency signals with respect to one another.

22. The method according to claim 16, which comprises encrypting information of the radiofrequency signal.

23. The method according to claim 22, which comprises differently encrypting a plurality of radiofrequency signals.

24. The method according to claim 16, which comprises radiating the radiofrequency signal in a time-delayed manner.

25. The method according to claim 16, which comprises transmitting the radiofrequency signal with a bandwidth greater than 100 kHz.

26. The method according to claim 16, which comprises transmitting the radiofrequency signal with a frequency of greater than 1 MHz.

27. The method according to claim 16, which comprises transmitting the radiofrequency signal with a frequency of between 100 MHz and 30 GHz.

28. A method of using an energy self-sufficient radiofrequency transmitter, which comprises:

providing the energy self-sufficient radiofrequency transmitter with:

at least one electromechanical transducer,

a rectifier circuit connected downstream from said transducer,

a voltage converter circuit,

a logic circuit configuration connected to said voltage converter circuit, said logic circuit configuration including a sequence controller and a memory for storing an identification code,

a radiofrequency transmission stage connected to said logic circuit configuration, and

at least one transmission antenna; and

using the energy self-sufficient radiofrequency transmitter in a technology selected from a group consisting of traffic technology, automotive technology, building technology, and installation technology.

* * * * *