UNITED STATES PATENT AND TRADEMARK OFFICE

BEFORE THE PATENT TRIAL AND APPEAL BOARD

SAMSUNG ELECTRONICS CO., LTD.
Petitioner

v.

MOJO MOBILITY INC.
Patent Owner

Patent No. 11,462,942

PETITION FOR *INTER PARTES* REVIEW
OF U.S. PATENT NO. 11,462,942

TABLE OF CONTENTS

I. INTRODUCTION 1

II. MANDATORY NOTICES 1

III. PAYMENT OF FEES 2

IV. GROUNDS FOR STANDING 2

V. PRECISE RELIEF REQUESTED AND GROUNDS 2

VI. LEVEL OF ORDINARY SKILL 4

VII. THE '942 PATENT 5

VIII. CLAIM CONSTRUCTION 5

IX. DETAILED EXPLANATION OF GROUNDS 6

A. Ground 1: Claims 21 and 24 are obvious over *Okada, Odendaal, Cho, Tetlow, Nguyen, Berghegger*, and *Calhoon* 6

1. Claim 21 6

2. Claim 24 58

B. Ground 2: Claim 22 is obvious over *Okada, Odendaal, Cho, Tetlow, Nguyen, Berghegger*, *Calhoon*, and *Shima* 60

1. Claim 22 60

C. Ground 3: Claim 23 is obvious over *Okada, Odendaal, Cho, Tetlow, Nguyen, Berghegger*, *Calhoon*, and *Labrou* 65

1. Claim 23 65

D. Ground 4: Claim 25 is obvious over *Okada, Odendaal, Cho, Tetlow, Nguyen, Berghegger*, *Calhoon*, and *Meadows* 69

1. Claim 25 69

E. Ground 5: Claim 26 is obvious over *Okada, Odendaal, Cho, Tetlow, Nguyen, Berghegger*, *Calhoon*, and *Takagi* 74

1. Claim 26 74

X. DISCRETIONARY DENIAL IS NOT APPROPRIATE 80

XI. CONCLUSION 84

LIST OF EXHIBITS

Ex. 1001	U.S. Patent No. 11,462,942
Ex. 1002	Declaration of R. Jacob Baker, Ph.D., P.E.
Ex. 1003	Curriculum Vitae of R. Jacob Baker, Ph.D., P.E.
Ex. 1004	Prosecution History of U.S. Patent No. 11,462,942
Ex. 1005	Translation of Japanese Patent Application Publication No. 2006-141170A ("*Okada*")[1]
Ex. 1006	U.S. Patent No. 6,912,137 ("*Berghegger*")
Ex. 1007	U.S. Patent Application Publication No. 2006/0145660A1 ("*Black*")
Ex. 1008	U.S. Patent No. 6,960,968 ("*Odendaal*")
Ex. 1009	U.S. Patent No. 6,489,745 ("*Koreis*")
Ex. 1010	U.S. Patent No. 6,366,817 ("*Kung*")
Ex. 1011	Physics, Henry Semat et al., Rinehart & Co., Inc., 1958, Chapters 29-32 ("*Semat*")
Ex. 1012	U.S. Patent No. 5,702,431 ("*Wang*")
Ex. 1013	International Patent Application Publication No. WO1996040367 ("*WangII*")
Ex. 1014	Handbook of Radio and Wireless Technology, Stan Gibilisco, McGraw-Hill, 1999 ("*Gibilisco*")
Ex. 1015	U.S. Patent No. 4,942,352 ("*Sano*")

[1] Exhibit 1005 includes the original Japanese version and a certified English translation. Citations to *Okada* are to the English translation.

Ex. 1016	Fundamentals of Electric Circuits, 2d., Charles Alexander et al., McGraw-Hill, 2004 ("*Alexander*")
Ex. 1017	International Patent Application Publication No. WO1994/18683 ("*Koehler*")
Ex. 1018	Mojo Mobility's Infringement Chart for U.S. Patent No. 11,462,942 (Ex. 5) accompanying Mojo Mobility's Infringement Contentions in *Mojo Mobility Inc. v. Samsung Elecs. Co., Ltd.*, No. 2:22-cv-00398 (E.D. Tx.) (February 28, 2023)
Ex. 1019	U.S. Patent Application Publication No. 2005/0068019 ("*Nakamura*")
Ex. 1020	U.S. Patent Application Publication No. 2007/0109708 ("*Hussman*")
Ex. 1021	RESERVED
Ex. 1022	Mojo Mobility's Infringement Contentions in *Mojo Mobility Inc. v. Samsung Elecs. Co., Ltd.*, No. 2:22-cv-00398 (E.D. Tx.) (February 28, 2023)
Ex. 1023	U.S. Patent Application Publication No. 2004/0201988 ("*Allen*")
Ex. 1024	U.S. Patent No. 7,378,817 ("*Calhoon-817*")
Ex. 1025	International Patent Application Publication No. WO2003/096361 ("*Cheng*")
Ex. 1026	International Patent Application Publication No. WO2004/038888 ("*ChengII*")
Ex. 1027	Spiral Inductor Design for Quality Factor, Sang-Gug Lee et al., Journal of Semiconductor Technology and Science, Vol. 2. No. 1, March 2002 ("*Lee*")
Ex. 1028	U.S. Patent Application Publication No. 2001/0055207 ("*Barbeau*")
Ex. 1029	AN710 Antenna Circuit Design for RFID Applications
Ex. 1030	U.S. Patent No. 6,606,247 ("*Credelle*")

Ex. 1031	RESERVED
Ex. 1032	U.S. Patent No. 5,808,587 ("*Shima*")
Ex. 1033	U.S. Patent Application Publication No. 2005/0134213A1 ("*Takagi*")
Ex. 1034	RESERVED
Ex. 1035	RESERVED
Ex. 1036	International Patent Application Publication No. WO2003/105308A1 ("*Hui*")
Ex. 1037	U.S. Patent No. 5,780,992 ("*Beard-1*")
Ex. 1038	RESERVED
Ex. 1039	U.S. Patent No. 5,631,539 ("*Beard-2*")
Ex. 1040	RESERVED
Ex. 1041	U.S. Patent Application Publication No. 2005/0127868A1 ("*Calhoon*")
Ex. 1042	RESERVED
Ex. 1043	U.S. Patent No. 7,791,311 ("*Sagoo*")
Ex. 1044	U.S. Patent Application Publication No. 2007/0145830A1 ("*Lee-II*")
Ex. 1045	U.S. Patent Application Publication No. 2007/0267718A1 ("*Lee-Via*")
Ex. 1046	RESERVED
Ex. 1047	U.S. Patent Application Publication No. 2006/0202665 ("*Hsu*")
Ex. 1048	International Patent Application Publication No. WO2009155000A2 ("*Lin*")
Ex. 1049	U.S. Patent Application Publication No. 2008/0067874 ("*Tseng*")
Ex. 1050	U.S. Patent No. 9,356,473 ("*Ghovanloo*")

Ex. 1051	Memorandum from Director Vidal (June 21, 2022)
Ex. 1052	Federal Court Management Statistics (December 2022)
Ex. 1053	Docket Control Order of March 28, 2023, *Mojo Mobility Inc. v. Samsung Elecs. Co., Ltd.*, No. 2:22-cv-00398 (E.D. Tex.)
Ex. 1054	RESERVED
Ex. 1055	RESERVED
Ex. 1056	U.S. Patent No. 6,459,383 ("*Delatorre*")
Ex. 1057	International Patent Application Publication No. WO1999050806A1 ("*Cunningham*")
Ex. 1058	International Patent Application Publication No. WO2004026129A1 ("*Due-Hansen*")
Ex. 1059	U.S. Patent Application Publication No. 2009/0261778 ("*Kook*")
Ex. 1060	U.S. Patent Application Publication No. 2003/0195581A1 ("*Meadows*")
Ex. 1061	International Patent Application Publication No. WO2002/37641 ("*Cho*")
Ex. 1062	U.S. Patent Application Publication No. 2007/0022058 ("*Labrou*")
Ex. 1063	ATMEL e5530 Data Sheet (2002)
Ex. 1064	U.S. Patent Application Publication No. 2009/0243799A1 ("*Tetlow*")
Ex. 1065	U.S. Patent Application Publication No. 2003/0143963A1 ("*Pistor*")
Ex. 1066	U.S. Patent Application Publication No. 2002/0166073A1 ("*Nguyen*")
Ex. 1067	U.S. Patent Application Publication No. 2006/0119418A1 ("*Merandat*")
Ex. 1068	RESERVED

Ex. 1069	RESERVED
Ex. 1070	RESERVED
Ex. 1071	RESERVED
Ex. 1072	RESERVED
Ex. 1073	RESERVED
Ex. 1074	RESERVED
Ex. 1075	Watson, J., Mastering Electronics, Third Ed., McGraw-Hill, Inc. (1990) ("*Watson*")
Ex. 1076	Sedra, A., *et al.*, Microelectronic Circuits, Fourth Ed., Oxford University Press (1998) ("*Sedra*")
Ex. 1077	GB Patent Application Publication No. 2202414 ("*Logan*")
Ex. 1078	U.S. Patent No. 7,226,442 ("*Sheppard*")

I. INTRODUCTION

Samsung Electronics Co., Ltd. ("Petitioner") requests *inter partes* review of claims 21-26 ("challenged claims") of U.S. Patent No. 11,462,942 ("the '942 patent") (Ex. 1001) assigned to Mojo Mobility Inc. ("PO"). For the reasons below, the challenged claims should be found unpatentable and canceled.

II. MANDATORY NOTICES

Real Parties-in-Interest: Petitioner identifies the following as the real parties-in-interest: Samsung Electronics Co., Ltd., and Samsung Electronics America, Inc.

Related Matter: The '942 patent is at issue in the following matter(s):

- *Mojo Mobility Inc. v. Samsung Electronics Co., Ltd.*, No. 2-22-cv-00398 (E.D. Tex.) (asserting the '942 patent and also U.S Patent Nos. 9,577,440, 11,292,349, 11,201,500, 7,948,208, 11,342,777, and 11,316,371) ("Texas Litigation").
- Petitioner is filing concurrently herewith petitions for *inter partes* review challenging other claims of the '942 patent.

The '942 patent originates from U.S. Patent Application No. 17/728,502, filed on April 25, 2022, which is a continuation or continuation-in-part of a sequence of applications dated as early as Jan. 30, 2007. (Ex. 1001, Cover.) The '942 patent also lists multiple provisional applications dated as early as Jan. 31, 2006. (*Id.*)

Counsel and Service Information: Lead counsel: Joseph E. Palys (Reg. No. 46,508), and Backup counsel are (1) Naveen Modi (Reg. No. 46,224), (2) Howard Herr (*pro hac vice* admission to be requested). Service information is Paul Hastings LLP, 2050 M St., Washington, D.C., 20036, Tel.: 202.551.1700, Fax: 202.551.1705, email: PH-Samsung-MojoMobility-IPR@paulhastings.com. Petitioner consents to electronic service.

III. PAYMENT OF FEES

The PTO is authorized to charge any fees due during this proceeding to Deposit Account No. 50-2613.

IV. GROUNDS FOR STANDING

Petitioner certifies that the ’942 patent is available for review and Petitioner is not barred or estopped from requesting review on the grounds identified herein.

V. PRECISE RELIEF REQUESTED AND GROUNDS

The challenged claims should be canceled as unpatentable based on the following grounds:

Ground 1: Claims 21 and 24 are unpatentable under 35 U.S.C. § 103(a) as obvious over *Okada, Odendaal, Cho, Tetlow, Nguyen, Berghegger*, and *Calhoon*;

Ground 2: Claim 22 is unpatentable under 35 U.S.C. § 103(a) as obvious over *Okada, Odendaal, Cho, Tetlow, Nguyen, Berghegger*, *Calhoon*, and *Shima*;

Ground 3: Claim 23 is unpatentable under 35 U.S.C. § 103(a) as obvious over *Okada, Odendaal, Cho, Tetlow, Nguyen, Berghegger*, *Calhoon*, and *Labrou*;

Ground 4: Claim 25 is unpatentable under 35 U.S.C. § 103(a) as obvious over *Okada, Odendaal, Cho, Tetlow, Nguyen, Berghegger*, *Calhoon*, and *Meadows*; and

Ground 5: Claim 26 is unpatentable under 35 U.S.C. § 103(a) as obvious over *Okada, Odendaal, Cho, Tetlow, Nguyen, Berghegger*, *Calhoon*, and *Takagi*.

In the Texas Litigation, PO identified the following priority dates for the challenged claims (and possibly up to three months earlier):

(a) 7/30/2007: claims 21-24, 26; and

(b) 12/12/2007: claim 25.

(Ex. 1022, 6-8.) Without conceding such dates are appropriate, Petitioner assumes for this proceeding those are the effective date(s) for the challenged claims. The asserted prior art herein qualifies as prior art as follows:

Okada (published: 6/1/2006)	§102(b)
Labrou (filed: 07/18/2006; published: 01/25/2007)	§§102(a), 102(e)
Odendaal (filed: 6/26/2002; issued: 11/1/2005)	§§102(b), 102(e)
Nguyen (filed: 05/2/2001; published: 11/7/2002)	

Calhoon (filed: 12/12/2003; published 06/16/2005)	
Berghegger (filed 11/28/2002; issued 6/28/2005)	
Cho (filed 11/6/2001; published 05/10/2002)	
Meadows (filed 4/18/2003; published 10/16/2003)	
Takagi (filed: 11/4/2004; published 6/23/2005)	
Shima (filed: 03/21/1997; published: 9/15/1998)	
Tetlow (filed: 06/22/2006; published: 10/1/2009)	§102(e)

None of these references were considered during prosecution, except the issued patent corresponding to *Calhoon* and a published application co-invented by *Okada* were submitted but not applied. (Ex. 1001, cover; *infra* §X.)

VI. LEVEL OF ORDINARY SKILL

A person of ordinary skill in the art as of the claimed priority date of the '942 patent ("POSITA") would have had at least a master's degree in electrical engineering, or a similar discipline, and two or more years of experience with wireless charging systems, including, for example, inductive power transfer systems.

(Ex. 1002, ¶¶20-21.)[2] More education can supplement practical experience and vice versa. (*Id.*)

VII. THE '942 PATENT

During prosecution, the claims went straight to allowance because allegedly "the prior art fails to teach or suggest" features associated with the claimed "communication and control circuit" and "regulate" features (*id.*, 562-573). However, those features, and others, recited in the challenged claims relate to a compilation of conventional components/features that were disclosed/suggested by the prior art combinations herein. *See In re Gorman*, 933 F.2d 982, 986 (Fed. Cir. 1991). (*Infra* §IX; Ex. 1002, ¶¶22-65, 69-246; Exs. 1005-1017, 1019-1020, 1023-1030, 1032-1033, 1036-1037, 1039, 1041, 1043-1045, 1047-1050, 1056-1067, 1075-1078.)

VIII. CLAIM CONSTRUCTION

The Board only construes the claims when necessary to resolve the underlying controversy. *Toyota Motor Corp. v. Cellport Systems, Inc.*, IPR2015-00633, Paper No. 11 at 16 (Aug. 14, 2015). For purposes of this proceeding, Petitioner believes

[2] Petitioner submits the declaration of R. Jacob Baker, Ph.D., P.E. (Ex. 1002), an expert in the field of the '942 patent. (Ex. 1002, ¶¶1-13; Ex. 1003.)

that no special constructions are necessary to assess whether the challenged claims are unpatentable over the asserted prior art.[3] (Ex. 1002, ¶68.)

IX. DETAILED EXPLANATION OF GROUNDS[4]

A. Ground 1: Claims 21 and 24 are obvious over *Okada, Odendaal, Cho, Tetlow, Nguyen, Berghegger*, and *Calhoon*

1. Claim 21

a) A portable device configured to receive inductive power from an inductive charging system comprising a primary coil and associated circuit, the portable device comprising:

a battery;

To the extent the preamble is limiting, *Okada* discloses these limitations. (Ex. 1002, ¶¶70-84, 121-127; §§IX.A.1(c)-(l).) *Okada* discloses a "mobile-enabled

[3] Petitioner reserves all rights to raise claim construction and other arguments, including challenges under 35 U.S.C. §112, in district court as relevant to those proceedings. *See, e.g.*, *Target Corp. v. Proxicom Wireless, LLC*, IPR2020-00904, Paper 11 at 11–13 (Nov. 10, 2020). A comparison of the claims to any accused products in litigation may raise controversies that are not presented here given the similarities between the references and the patent.

[4] References to prior art exhibits other than identified asserted prior art in the grounds demonstrate/support a POSITA's state-of-art knowledge at the time, as applicable.

electronic device[]" (*e.g.,* PDA3) ("**portable device**") including a rechargeable "**battery**." (Ex. 1005, Abstract, ¶¶0001, 0009, 0012 ("power receiving device…with a rechargeable secondary battery"), FIG. 2, ¶¶0015, 0034-0037, FIG. 14, ¶¶0134-0136, FIG. 15, ¶¶0138-0140, FIG. 16, ¶¶0142-0144, claim 4.) PDA3 (green (below)) receives inductive power from cradle 4 (with wire/plug 6/7, LEDs 5) (collectively "**inductive charging system**"). (Ex. 1005, ¶¶0034-0036; Ex. 1002, ¶121.)

FIG. 1

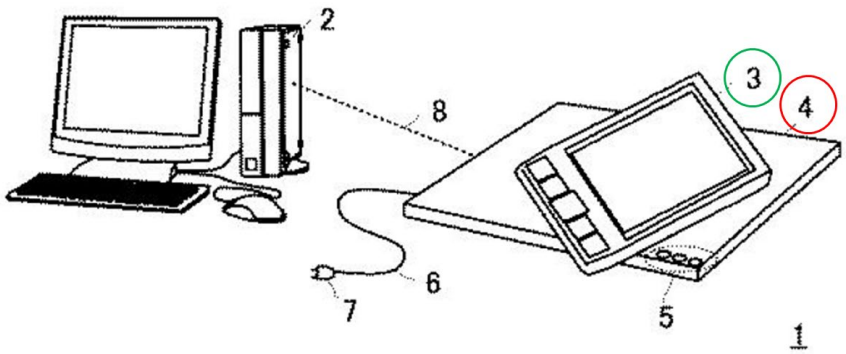

As shown below (FIG. 2), cradle 4 includes a **power transmitting module 10** ("PTM10"), and PDA3 includes a **power receiving module 40** ("PRM40") ("**receiver unit**") coupled to the battery (purple). (*Id.*, ¶¶0035-0058, FIG. 8, ¶¶0110-0111.) PTM10 includes a primary coil 19 ("**primary coil**") (blue) (*id.*, ¶0040) and various circuits (*e.g.*, one or more of IC 20 (and/or one or more of its components), circuits 13-18 etc.) ("**associated circuit**") (*id.*, ¶¶0037-0046). "[M]agnetic coupling" occurs via coil 19 and a receiver coil 41 in PRM40, which "induces

voltage" in coil 41 to "suppl[y] power" to PDA3/PRM40 and its battery. (*Id.*, ¶0035; Ex. 1002, ¶¶122-123.)

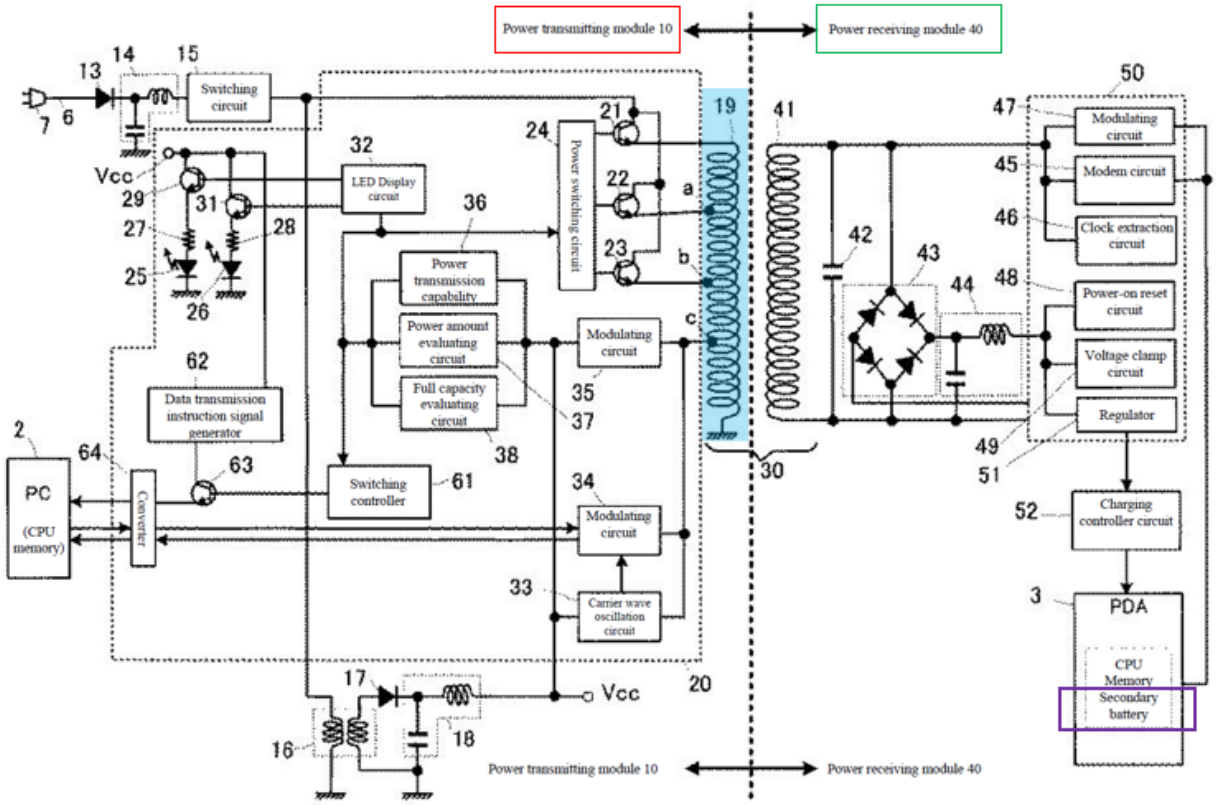

Switching circuit 15 in PTM10 receives a DC signal from circuits 13-14 (Ex. 1005, ¶¶0038, 0049) to generate a switching pulse signal that is converted (Vcc) and used to power components in PTM10 (via circuits 16-18) (*id.*, ¶0039) and is also supplied to coil 19 via switches 21/22/23 under control of power switching circuit 24 (*id.*, ¶¶0040, 0049-0051). Such features allow selected power level(s) to be transferred to PDA3 based on device "power consumption information" provided by PRM40. (*Id.*, ¶¶0040, 0051, 0057, 0063-0073; Ex. 1002, ¶124.)

Okada discloses configurations/applications of its power/charging system and portable device configuration having similar functionalities associated with PTM10 and PRM40. (Ex. 1005, FIGS. 2, 7 (below), 8-17, ¶¶0009-0032, 0094-0154 (multiple primary/secondary coil configurations, with switching controller circuitry); Ex. 1002, ¶125.)

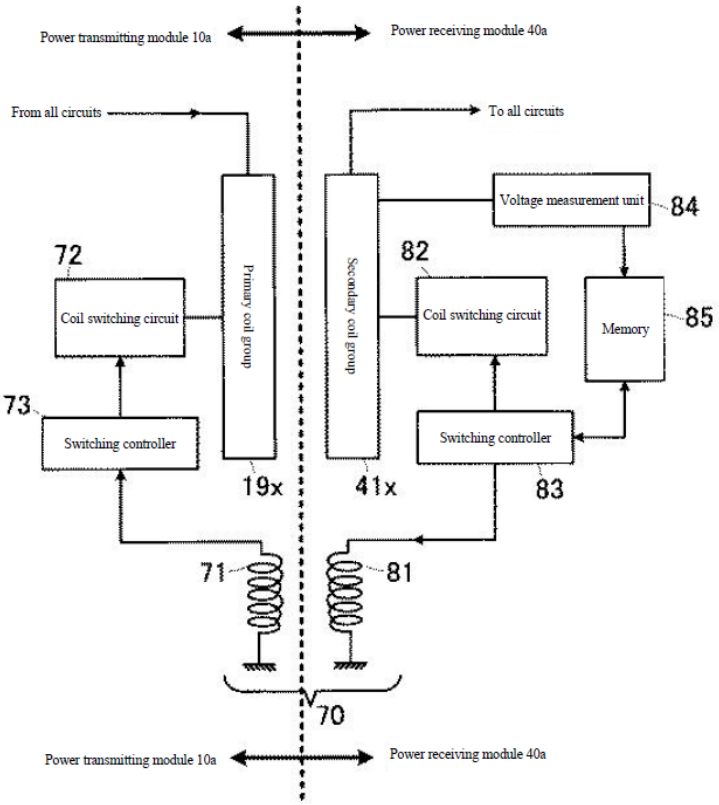

Applications of these features are described with respect to other examples. (Ex. 1005, ¶0107, FIG. 9 (below), ¶¶0116-0118 (multi-coil tabletop charging pad), FIG. 10, ¶0119 (charging multiple portable devices), FIGS. 11(a)-(b) (below), ¶¶0120-0122 (multiple PTM10s powering/charging multiple devices with PRM40s), FIGS. 12(a)-(b) (below) ¶¶0123-0126, FIGS. 13(a)-(b) (below), ¶¶127-132; Ex.

1002, ¶126.) Thus, multiple types of "**portable device(s)**" can operate with different types of "**charging systems.**" (*Id.*)

FIG. 9

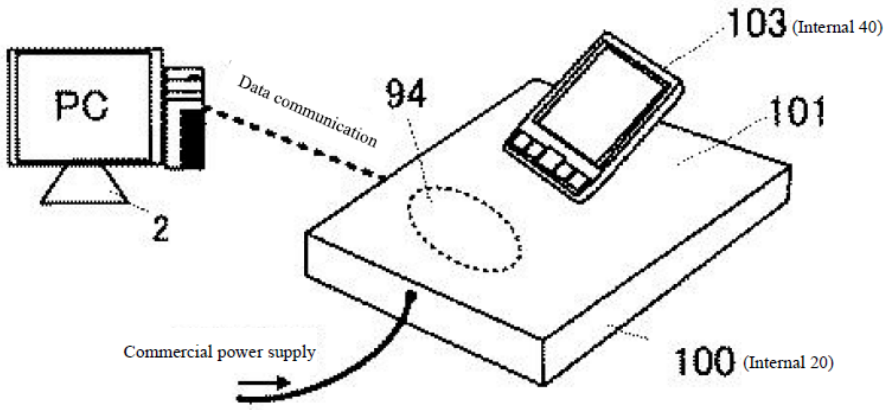

FIG. 10

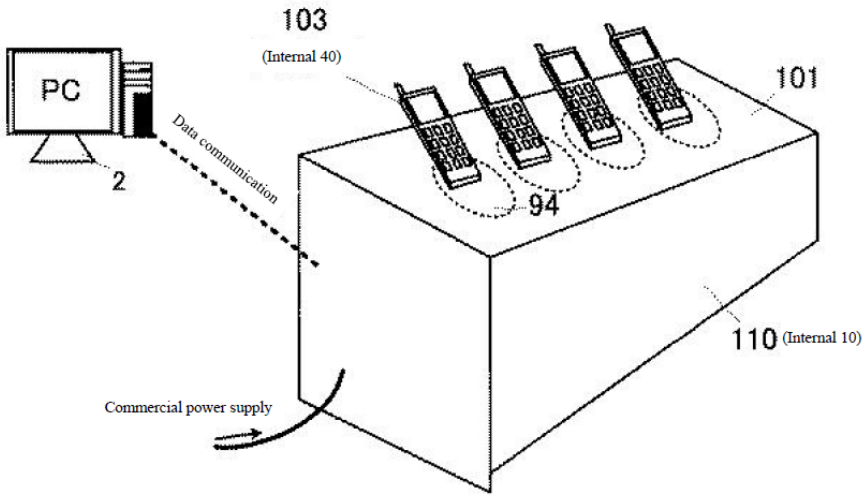

FIG. 11

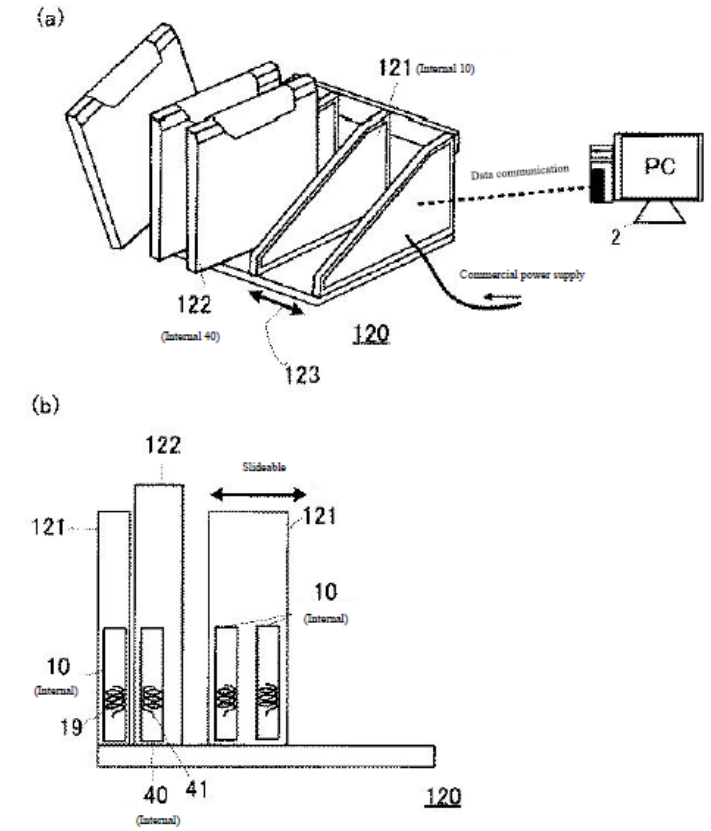
(a)
121 (Internal 10)
Data communication
PC
2
Commercial power supply
122
(Internal 40)
120
123
(b)
122
Slideable
121
121
10
(Internal)
10
(Internal)
19
40
41
(Internal)
120

FIG. 12

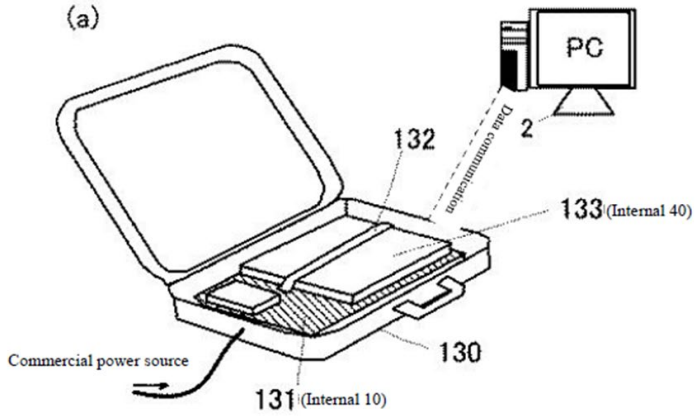
(a)
PC
2
Data communication
132
133 (Internal 40)
130
Commercial power source
131 (Internal 10)

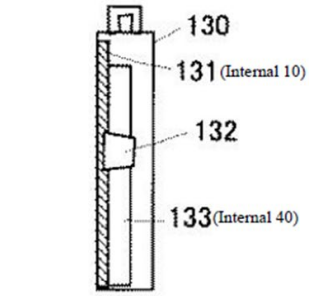
(b)
130
131 (Internal 10)
132
133 (Internal 40)

FIG. 13

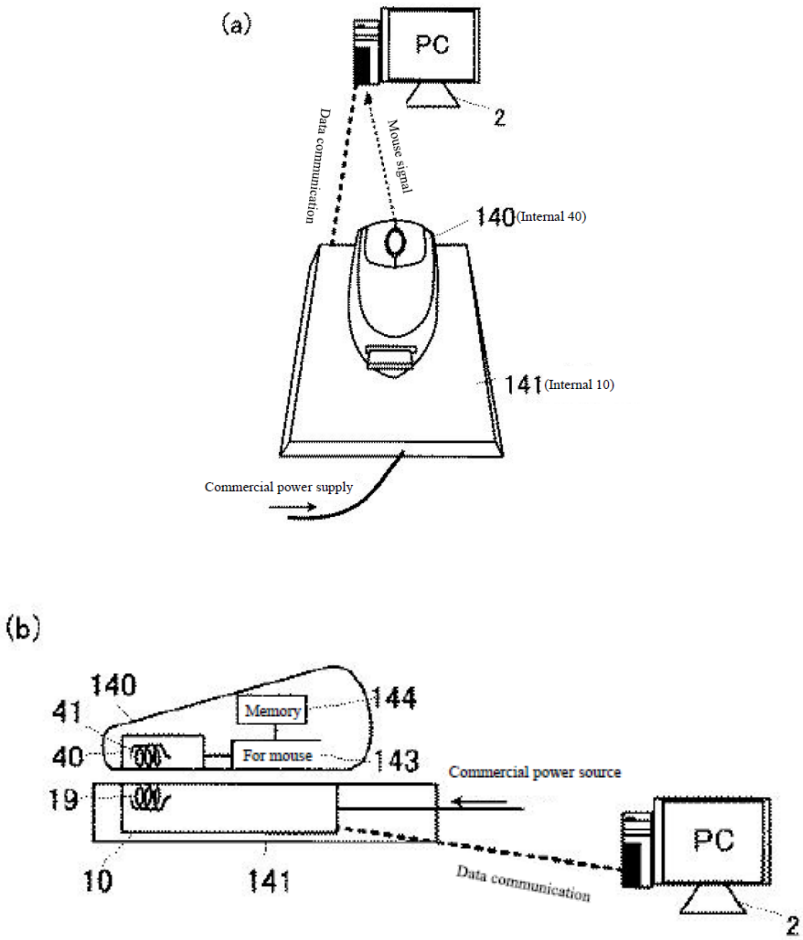

FIG. 3 (below) shows "power supply operations carried out between [PTM10 and PRM40]," applicable to such configurations. (Ex. 1005, FIG. 3, ¶¶0059-0090; ¶¶0094-0115; Ex. 1002, ¶127.)

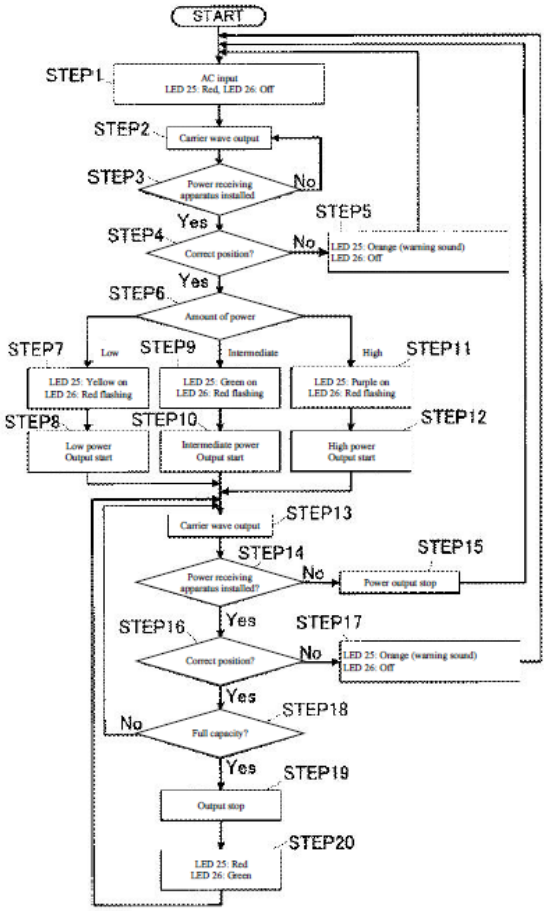

b) a coil substantially planar in shape and located parallel to a charging surface of the portable device so that an alternating magnetic field, when received through the charging surface of the portable device from the primary coil of the inductive charging system in a direction substantially perpendicular to the plane of the coil, inductively generates a current in the coil to provide power inductively to the portable device when the portable device is placed on the inductive charging system for charging the battery of the portable device;

Okada in view of *Odendaal* discloses/suggests this limitation. (Ex. 1002, ¶¶128-150.) PRM40 includes coil 41 (orange) ("**coil**"). (Ex. 1005, ¶¶0035, 0040; §§IX.A.1(a)-(b); Ex. 1002, ¶128.)

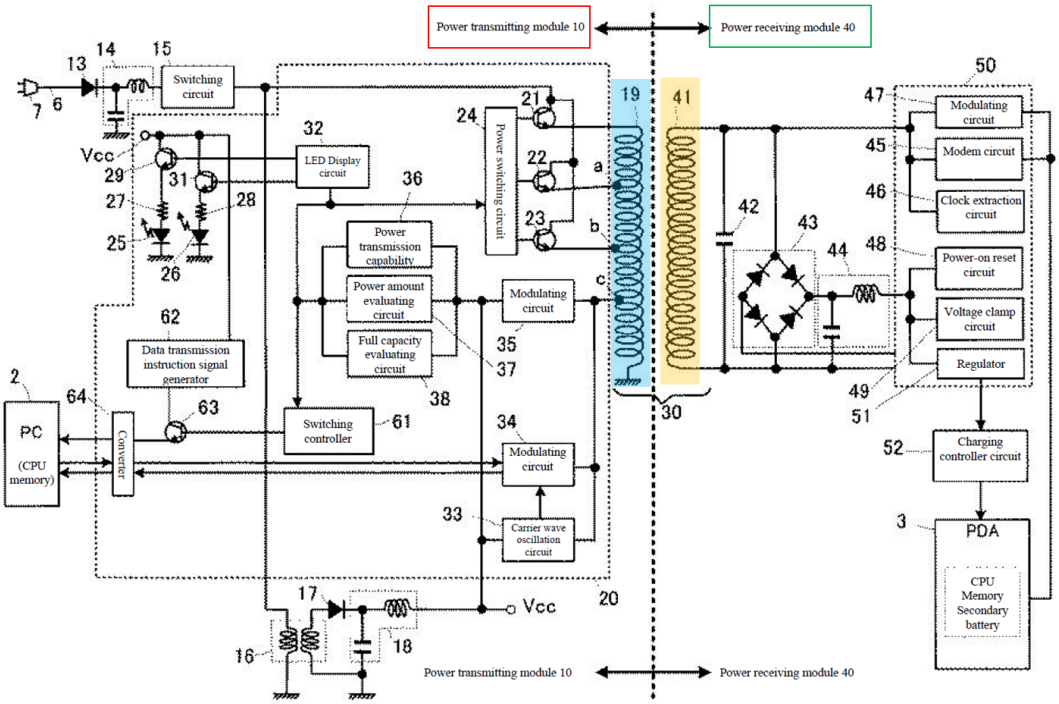

When PDA3 is properly positioned/aligned on/with cradle 4, "magnetic coupling induces a voltage" (and thus current) on coil 41 to power/charge PDA3. (§IX.A.1(a); Ex. 1005, ¶¶0051; *id.*, ¶¶0035, 0047 0056, 0066-0068, FIG. 3.) Such magnetic coupling and inductive power transfer results in coil 41 receiving "**an alternating magnetic field**" from coil 19, which "**inductively generates a current**" in coil 41 to "**provide power inductively to the portable device**," as known in the art. (Ex, 1002, ¶129; Ex. 1041, ¶¶0022 ("magnetic flux induces an alternating current through the magnetic field and across the receiver coil, completing an energy transfer circuit."), 0031; Ex. 1009, 2:62-3:8, 1:54-2:18, 3:20-4:11, FIGS. 1-3; Ex. 1010, FIGS. 1-5B, 8:55-9:52 ("as is *well known by those skilled in the relevant art*, primary coil 510 *induces a current to flow in secondary coil* 230"), FIGS. 6A-10,

7:21-8:54, 9:53-10:22, 11:27-14:67.)

Power/charging occurs "**when the portable device** [PDA3] **is placed on the inductive charging system** [cradle 4] **for charging the battery** [secondary battery] **of the portable device**." (Ex. 1002, ¶130.) Consistent with the disclosed feedback loop processes (Ex. 1005, ¶¶0056-0058, FIG. 3 (below); §§IX.A.1(i)-(l)), PTM10 components use information received from PRM40 to "evaluate whether supplying power to the device via the common cradle 4 is feasible," and whether the device is properly aligned/positioned to efficiently receive power (*id.*, ¶0057-0073, FIG. 3 (*e.g.*, Steps 3-12)), and continuously checks for presence/alignment/position/charge status after onset of power/charge operations (*id.*, FIG. 3 (*e.g.,* Steps 13-20), ¶¶0074-77, 0090).

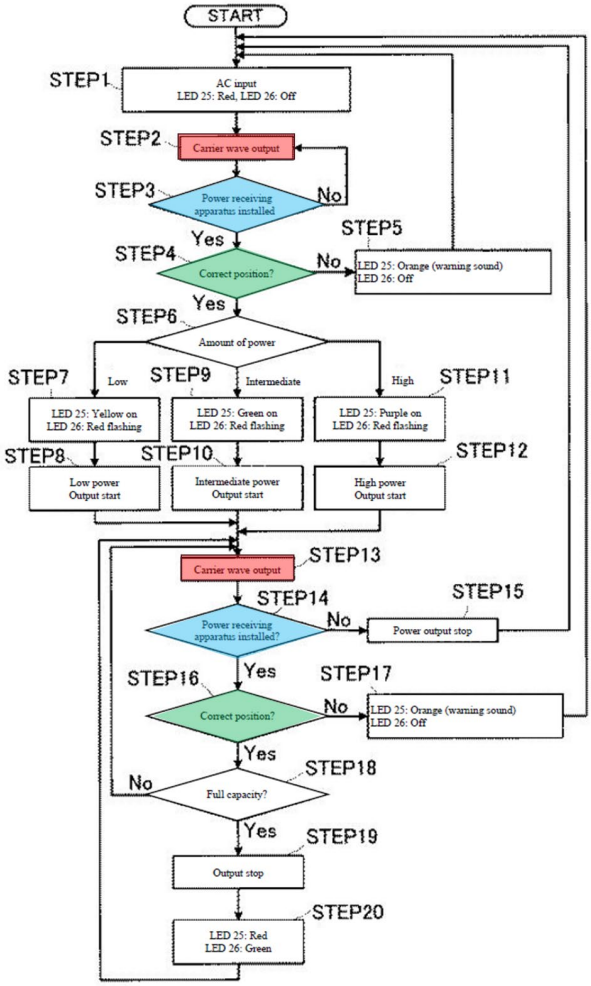

PDA3's "**coil**" is "**located parallel to a charging surface of the portable device**." (Ex. 1002, ¶131.) Figures 11(b)/13(b) below exemplify coil 41 (**orange**) positioned substantially parallel (**red**) to a surface (**blue**) of the portable device. (Ex. 1005, FIGS. 11(b) (left), 13(b) (right), §§IX.A.1(a)-(b); Ex. 1002, ¶131.) Similar arrangement/features exists with the other exemplary configurations discussed above and as modified below. (§IX.A.1(a)-(b); Ex. 1002, ¶131.)

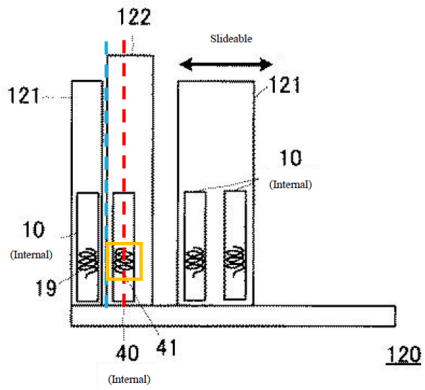

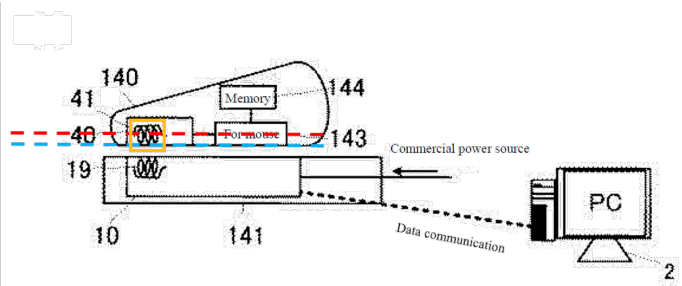

While *Okada* does not expressly state the "coil *substantially planar in shape* and located parallel to a charging surface of the portable device," a POSITA would have found it obvious to configure *Okada*'s portable device to implement/use planar coil(s) (and primary coil(s)) in view of *Odendaal*. (Ex. 1002, ¶132.)

Planar coils placed in parallel to device/charger surfaces were known. (Ex. 1002, ¶¶50-53, 133-139 (explaining planar coils state-of-art in detail); Ex. 1027, 1-3 (planar spiral inductor); Ex. 1015, FIGS. 1-2, 3-4, 7-12, Abstract, 1:5-2:29, 2:64-3:27, 3:39-51, 5:5-47, 5:48-9:5; Ex. 1047, FIGS. 1-3, 6, 8A-9, ¶¶0002, 0006-0007, 0018-0025-0034; Ex. 1025, FIGS. 1, 3, 8-9, 13, 1:10-2:3, 2:5-12 (thin coil designs), 2:14-3:2, 4:19-32, 7:25-9:28, 12:27-32, 14:4-17; Ex. 1026, FIGS. 1-2, 5, 9A-9C, Abstract, 1:3-4:4, 4:6-9:4, 11:4-15 (flat coils); Ex. 1009, Abstract, FIGS. 1-3, 1:4-51, 1:54-2:26, 2:47-3:8, 3:9-39 (thin/flat coil), 4:18-60; 1024, FIGS. 3, 8-9, 1:12-15, 1:39-2:29, 9:41-53, 10:45-57, 11:60-13:4; Ex. 1028, Abstract, FIGS. 2-7, ¶¶0001, 0004-0007, 0025-0032, 0041; Ex. 1029, 1-4, 9-19 (planar-spiral coils); Ex. 1030,

FIGS. 3-7B, 1:5-9, 1:59-61, 3:19-56, 4:62-567, 5:25-44; Ex. 1036, Abstract, 2:22-3:6, 5:22, 11:18, 23:20-24:8 ("flat surface [] preferably parallel to the plane of the secondary winding within the housing"), 24:19-22 ("***secondary coil* or *PCB winding should be placed close to the (preferably flat) 20 surface of the housing of the secondary charging module so as to pick up maximum changing AC magnetic flux*** from the primary inductive charging extension system or platform").)

Aware of such coil designs and associated tradeoffs (*e.g.*, size/weight/cost/performance), a POSITA would have been motivated to consider relevant teachings (*e.g., Odendaal*) when configuring/implementing an inductive power transfer/receiver device/system similar to *Okada*. (Ex. 1002, ¶¶133-139; Ex. 1047, ¶0033.)

Odendaal discloses inductive power/data transfer/reception technologies/techniques, and like *Okada*, is in the same technical field as the '942 patent. (§§IX.A.1(a)-(b); Ex. 1008, Title, Abstract, FIGS. 1A-4, 11-12, 1:5-3:57, 4:50-5:8, 5:24-28, 6:59-64; Ex. 1001, Abstract, 1:50-7:50.) Also like *Okada*, *Odendaal* discloses features that were reasonable pertinent to particular problem(s) the inventor for the '942 patent (and a POSITA) was trying to solve. (*E.g.*, Ex. 1001, 1:50-7:50; Ex. 1008, Abstract, 1:5-3:57, 4:50-5:8, 5:24-28, 6:59-64; §§IX.A.1(a)-(b); Ex. 1005, FIGS. 1, 2, 7, 9-12 ¶¶0037-0048, 0049-0058, 0094-0109, 0116-0126; Ex. 1002, ¶140.) Such teachings thus would have been consulted when

designing/implementing a contactless/inductive charging system, like *Okada*. (Ex. 1002, ¶¶140-142.)

Odendaal discloses known use of **planar-type inductor coils** in an inductive power transfer system, for, *e.g.*, charging a cellphone battery. (Ex. 1008, FIGS. 1A-1B, 2A, 2C, 8E, 1:58-2:43.) *Odendaal* describes using a planar resonator having characteristics of an integrated inductor-capacitor transformer. (*Id.*, 1:53-57.) The planar resonator includes spirals on opposite sides for energy transfer/reception "so that a battery of a cellphone could be charged without physical wires." (*Id.*, 1:60-67.) The planar resonator "transfer[s] power across the "interface-of-energy-transfer" (IOET) in either an electric or **magnetic form**, or both." (*Id.*, 2:1-7, 7-10 ("can permit transformer action…**without** capacitive energy transfer"), 2:65-3:5, 4:44-5:8, 6:1-18; Ex. 1002, ¶¶94-97, 143-144.)

The planar coils may have "a thin and/or relatively flat top coil surface" and "with an air gap." (Ex. 1008, 2:44-54.) "The spiral-shaped conductor may comprise **pcb** spiral-wound conductors" and "a battery charging circuit can be coupled to one of the first and second spiral shaped conductors, and **load can be coupled to the other**…" where "coupling between" the battery/charger "may comprise…**magnetic coupling, wherein power is transferred by the coupling of…magnetic flux** across the IOET." (*Id*., 2:55-64.) *Odendaal*'s teachings regarding (*id.*, 1:60-67) are consistent with that known in the art. (Ex. 1002, ¶145; *supra* state-of-art disclosures;

Ex. 1008, 1:60-67, 2:19-21, 2:29-44, 3:65-67.) Moreover, consistent with the thin form factor configurations of *Okada* (e.g., PDAs/mobile phones/laptops, charger pad, etc.), *Odendaal* discloses that the spiral coils "are preferably integrated into a **planar (flat/thin) structure**" (Ex. 1008, 3:3-5) and may conform to the housing surface to facilitate power transfer "in close proximity" (*id.*, 2:29-44). Such arrangements disclose coils that are parallel to the surface of the device and charger. (Ex. 1002, ¶¶145-146.)

In light of such teachings, and state-of-art knowledge, a POSITA would have been motivated, and found obvious, to modify the *Okada* system to use planar coil 41 in PDA3 (and complimented such a design with corresponding planar primary coil) to expand/compliment applications compatible with those contemplated by *Okada* to use thin(ner) devices. (Ex. 1002, ¶¶147-148; §§IX.A.1(a).) Such a modification would have provided options to reduce the volume the coil(s) occupy, device size/weight, and expanded/enhanced applications of *Okada* (*e.g.*, PDAs/mobile devices/laptops, pads, tables, etc.) (§§IX.A.1(a)-(b); Ex. 1005, FIGS. 1, 9, 10-16, ¶¶0033-0034, 0116-0146; Ex. 1061, 2:15-27 (volume/weight of portable device circuitry "should be reduced").) Planar coils provided options to reduce the distance between primary/secondary coils (promoting close proximity coupling (Ex. 1008, 2:29-44)) for improving power transmission efficiency, reducing energy waste, and shortening charging time. (Ex. 1002, ¶¶147-148; Ex. 1005, ¶¶0066-0068,

0112, FIGS. 4(a)-4(b); Ex. 1036, 24:19-22 (the coil "should be placed close to the (preferably flat) 20 surface of the housing…to pick up maximum changing AC magnetic flux….").)

A POSITA would have had the skills and rationale in light of the teachings/suggestions of *Okada*, *Odendaal*, and a POSITA's state-of-art knowledge, to implement the above modification while considering design tradeoffs and techniques/technologies with a reasonable expectation of success. (Ex. 1002, ¶149.) Especially given such modification would have involved known technologies/techniques (*supra*) to yield the predictable result of providing a portable device (and associated charger) with known coil designs promoting thin form factor configurations and inductive power transfer, like that contemplated by *Okada-Odendaal*. (Ex. 1002, ¶149; §IX.A.1(a)) *See KSR Int'l Co. v. Teleflex, Inc.*, 550 U.S. 398, 416 (2007).

A POSITA would have understood implementing a planar receiver coil (along with similar positioned primary planar coil) as noted above in the *Okada-Odendaal* device/system would have resulted in the planar receiver coil receiving "**from the** [planar] **primary coil**," "**an alternating magnetic field**" "**through the charging surface of the portable device**," that was "**in a direction substantially perpendicular to the plane of the** [receiver] **coil**," when the device is properly positioned/aligned/"**placed**" on the "**charging system**," consistent with that known

in the art. (Ex. 1002, ¶150; Ex. 1005, Abstract (coils 19 and 41 are "***internal***" coils ("**through the surface**")), FIGS. 1, 9-16; Ex. 1008, 2:51-52 ("substantially axially aligned" coils); Ex. 1011, 558, 559 ("magnetic field at the center of [a wire] loop is perpendicular to the plane of the loop"), 562-564, 592; Ex. 1048, Abstract, FIGS. 1-6, 1:28-2:4, 2:27-3:14, 4:11-24, 5:23-6:15, claims 1-88; Ex. 1049, Abstract, FIGS. 1, 5-6, 9, 11-12, 24-26, ¶¶0008-0010, 0044-0051, 0065-0066; Ex. 1050, Abstract, FIGS. 1-5, 9A-9C, 5:22-6:45, 11:22-33, 12:28-38, 16:25-17:23, 17:61-18:3 ("***substantially perpendicular***" magnetic field from planar coils).) A POSITA would have appreciated that implementing planar coils (primary-secondary) would have promoted efficient energy transmission between the charger and portable device, especially where the coils were aligned to allow the perpendicular magnetic field generated by the primary coil(s) to be efficiently received by the receiving coil(s) "**for charging the battery of the portable device**." (Ex. 1002, ¶150.)

c) a ferrite layer positioned under the coil on a side of the coil opposite to the charging surface of the portable device; and

Okada-Odendaal in view of *Cho* discloses/suggests this limitation. (Ex. 1002, ¶¶151-157; §§IX.A.1(a)-1(c).) While *Okada-Odendaal* does not expressly disclose a ferrite layer as claimed, a POSITA would have found it obvious to implement such features in view of *Cho*. (Ex. 1002, ¶151.)

Cho, like *Okada-Odendaal*, is in the same technical field as the '942 patent and discloses features reasonable pertinent to particular problem(s) the '942 patent inventor and a POSITA was trying to solve. (§§IX.A.1(a)-(b); Ex. 1061, Abstract, 1:5-18, 1:35-2:14, 17:10-23:13; Ex. 1001, Abstract, 1:50-7:50; Ex. 1002, ¶152.) Therefore, a POSITA had reasons to consider/consult *Cho* when designing/implementing the above-discussed *Okada-Odendaal* combination. (Ex. 1002, ¶152.)

Cho discloses designs/materials associated with planar receiver coils used for charging/powering portable devices. (Ex. 1061, 17:10-18 ("a transformer…divided into two parts implemented in a charger 54 and such portable device 48"), 17:18-19:19.) Such configurations include using ferrite sheets for implementing planar receiver coils in portable devices. (Ex. 1002, ¶¶107-110, 153; Ex. 1061, FIG. 8A (below).)

FIG. 8A

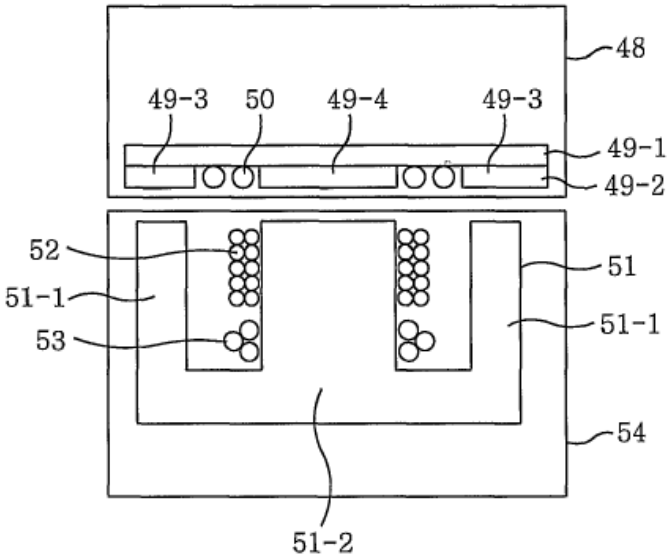

Portable device 48 includes a "thin film shape winding 50" located in a groove formed by two layers of ferrite sheets 49-1—49-2. (Ex. 1061, 17:10-18:15.) Charger 54 includes windings 52/53 located around ferrite core 51-2 for transferring energy to device 48. (*Id.*, 17:26-35.) Windings 52/53 may have "a planar shape." (*Id.*, 22:4-23:13, FIG. 11 (below).) Accordingly, *Cho* discloses use of a ferrite sheet 49-11 (**yellow**) placed behind/under a planar secondary coil 50-3 (red), e.g., "**ferrite layer positioned under the coil on a side of the coil opposite to the charging surface of the portable device**" 48 (blue). (*Id.*, FIGS. 8A and 11; Ex. 1002, ¶154.)

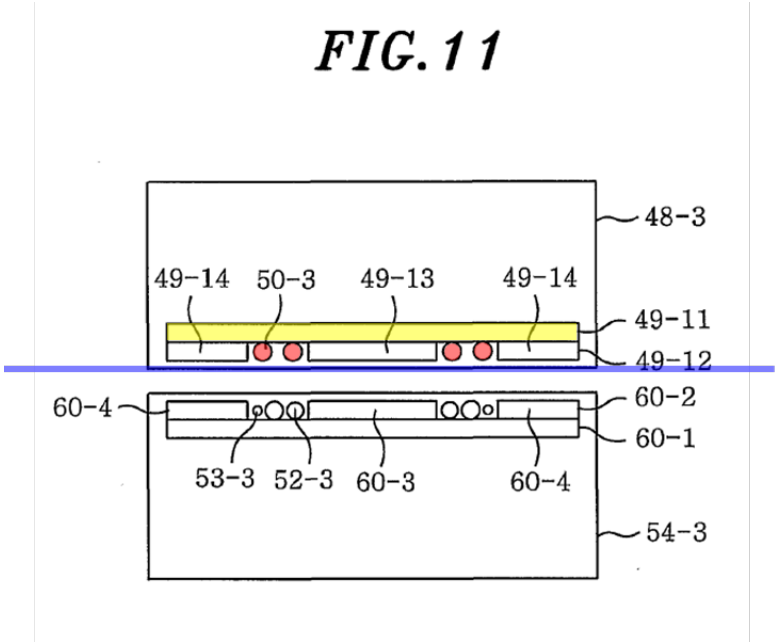

In light of such teachings/suggestions, a POSITA would have been motivated and found it obvious to configure the *Okada-Odendaal* modified portable device such that the device includes a ferrite sheet/layer placed under the planar receiver coil on a side of the coil opposite to the device's charging surface in order to, *e.g.*, shield circuitry from electromagnetic waves generated during inductive charging operations. (Ex. 1002, ¶155) *Cho*'s guidance associated with planar receiver coils with ferrite material/layers/sheets would have motivated a POSITA to consider/implement similar features in the *Okada-Odendaal* system, and done so with a reasonable expectation of success. (*Id.*) Indeed, *Cho* explains that "[a] ferrite sheet [can be] very soft," "not easily breakable by an impact," though "can be easily shaped." (Ex. 1061, 18:16-20.) "[B]y tailoring a thickness of a desired ferrite and a thickness and a width of a wire, a charging device **having a high charging**

efficiency can be obtained without increasing a volume and a weight of a portable device," consistent with the *Okada-Odendaal* combination. (*Id.*, 18:20-24; Ex. 1002, ¶155.)

A POSITA would have also understood such features, similar to those discussed above in *Cho*, would have shielded PDA3's circuits from the electromagnetic fields, *e.g.*, those generated by coil 19. (Ex. 1002, ¶156.) Such a feature would have reduced/minimized detrimental effects on such circuits caused by, *e.g.*, unwanted radiations and heat resulting in faulty signals, reduced reliability, and service life. (Ex. 1002, ¶156.)

A POSITA would have had the skill and rationale to implement, and reasonable expectation of success in achieving, such modification. (Ex. 1002, ¶157.) Indeed, it was known to employ ferrite sheet(s) in portable device receiver coil designs (*Cho*) and that such material as implemented in the modified *Okada-Odendaal* system would have mitigated potential detrimental effects of electromagnetic fields on the portable device. Thus, such modification would have involved applying known technologies/techniques to yield the predictable results noted above and consistent with the teachings of *Cho* and known in the art. (Ex. 1002, ¶157.) *KSR* at 416-18.

d) a receiver circuit powered by the received inductive power from the inductive charging system, wherein the receiver circuit comprises:

e) a receiver rectifier circuit including a rectifier and a capacitor;

Okada-Odendaal-Cho discloses/suggests limitations 21(d)-(e). (Ex. 1002, ¶¶158-159; §§IX.A.1(a)-(e).) PDA3's PRM40 ("**receiver unit**") includes a "**receiver circuit**" (*e.g.*, **red** below) including, *inter alia*, capacitor 42 (**pink**) and circuit 44 (with capacitor/inductor) (**orange**) (either exemplifying a "**capacitor**"), rectifying circuit 43 (**blue**) ("**receiver rectifier circuit**"), clock circuit 46, modulating circuit 47, and/or one or more other components in PRM40 (other than **battery**), *e.g.*, one or more of circuits 45, 48-49, and 51-52. (Ex. 1005, ¶0047, FIG. 2; §§IX.A.1(a)-(b).)[5] Circuits 42/43, 43/44, or 42/43/44 are each an example of a "**receiver rectifier circuit**" as they smooth/rectify the signal from coil 41 and used for powering/charging PDA3/battery. (Ex. 1002, ¶158; Ex. 1005, ¶¶0047, 0057.)

[5] The annotated figure(s) provided herein are exemplary visual aids and are not intended to limit/constrain the prior art mappings (alone or as modified). For example other components/circuitry, etc. not shown but described/suggested by *Okada* (or as modified *Okada*) may be encompassed in such mappings that meet the claimed limitation features as discussed herein.

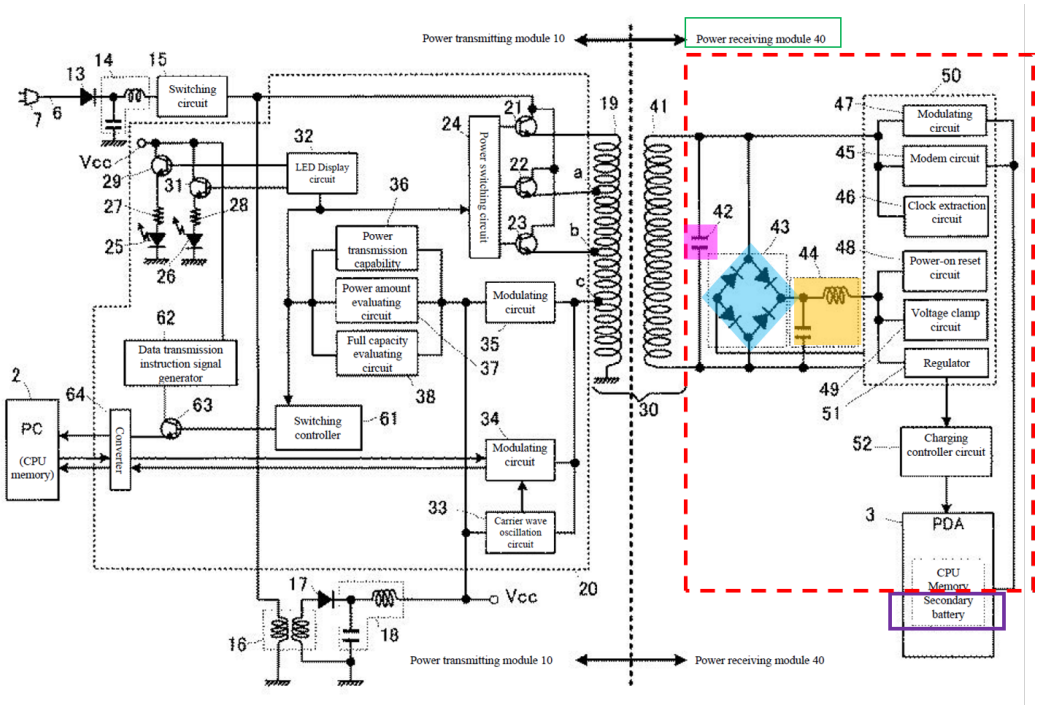

Okada's "**receiver circuit**" converts the signals received, via coils 19 and 41, from the "**inductive charging system**" (*supra* limitations 21(a)-(c)) into a DC signal to power the components in the "**receiver circuit**," PDA3, and charge its battery. (Ex. 1005, ¶¶0047, 0056-0058, 0062-0063; Ex. 1002, ¶159; §§IX.A.1(a)-(c); Ex. 1041, ¶¶0022, 0031; Ex. 1009, 8:55-9:52.) (§§IX.A.1(f)-(o).)

f) a receiver communication and control circuit including a microcontroller, wherein the receiver communication and control circuit is configured to modulate the current in the coil to communicate with the inductive charging system while the receiver circuit is being powered by the inductive charging system;

Okada-Odendaal-Cho discloses/suggests this limitation. (Ex. 1002, ¶¶160-171.)

Clock extracting circuit 46 of PRM40 extracts a clock signal a carrier wave received from oscillating circuit 33 of PTM10. (Ex. 1005, ¶¶0056-0057, 0063.) Modulating circuit 47 "uses the clock signal…to modulate the carrier wave," based on PDA3's information (power receiving capability, power consumption, and full capacity, information), and provides the modulated carrier wave to PTM10 through primary coil 19. (*Id.*, ¶¶0057, 0064.) After demodulation by circuit 35, and based on the information therein, evaluation circuits 36-38 of PTM10 "perform various decision-making processes" associated with powering/charging PDA3. (Ex. 1005, FIG. 2, ¶¶0042, 0057, 0060-0077, FIG. 3.) These processes determines whether supplying power from cradle 4 to PDA3 is feasible (circuit 36), amount of power to supply to PDA3 (circuit 37), and whether the charging of PDA3 is complete (circuit 38). (*Id.*, FIG. 3, ¶¶0057-0076; Ex. 1002, ¶161.)

Thus, in one example, at least one of circuits 46 and 47 (annotated in Figure 2 below) discloses an example of "**a receiver communication and control circuit**." (Ex. 1002, ¶162; Ex. 1005, FIG. 2.) Other components may be included in the "**circuit**," *e.g.*, modem circuit 45, power-on reset circuit 48, voltage clamp circuit 49, and/or switching controller 83 in the multi-coil arrangement of FIG. 7. (Ex. 1005, FIG. 7 (annotated below), ¶¶0047-0048, 0094-0115; §IX.A.1(b).)

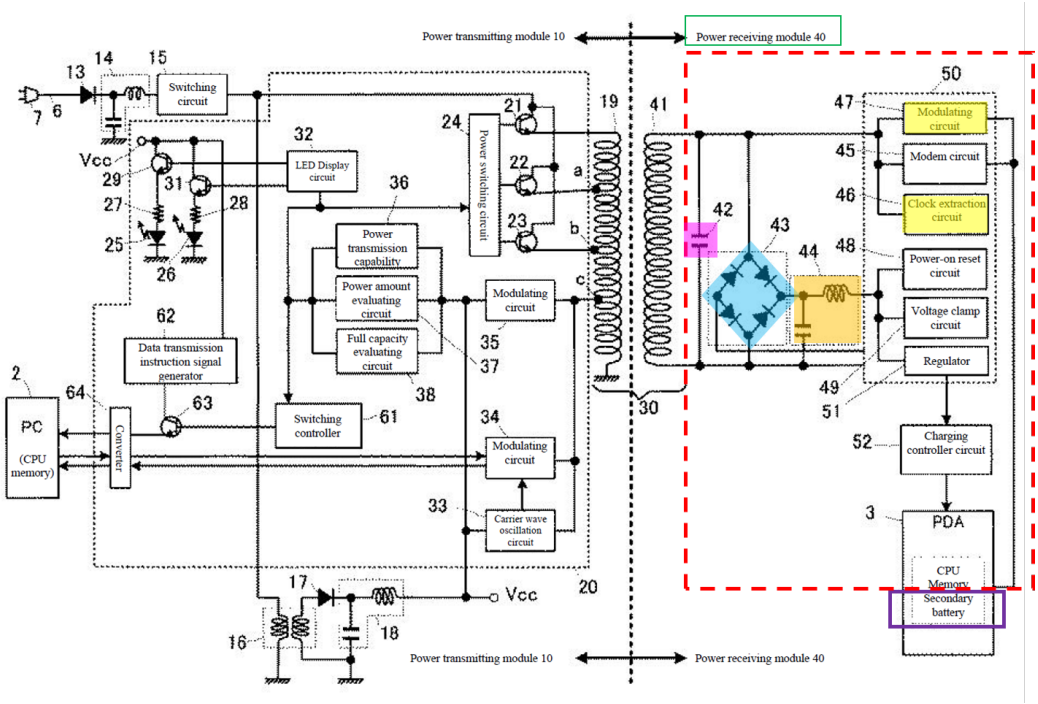
Power transmitting module 10
Power receiving module 40
Switching circuit
LED Display circuit
Power switching circuit
Power transmission capability
Power amount evaluating circuit
Full capacity evaluating circuit
Modulating circuit
Data transmission instruction signal generator
Switching controller
Carrier wave oscillation circuit
PC
(CPU memory)
Converter
Vcc
Modulating circuit
Modem circuit
Clock extraction circuit
Power-on reset circuit
Voltage clamp circuit
Regulator
Charging controller circuit
PDA
CPU
Memory
Secondary battery

FIG. 7

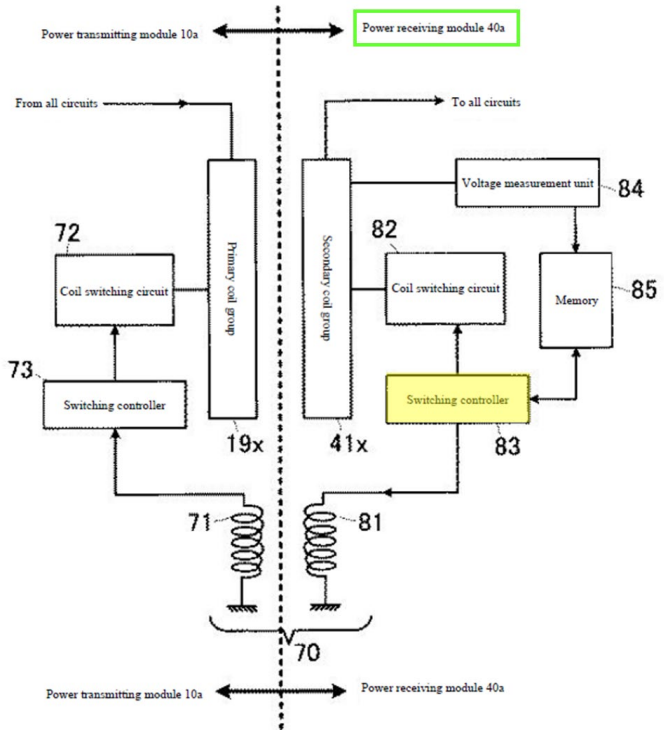
Power transmitting module 10a
Power receiving module 40a
From all circuits
To all circuits
Voltage measurement unit
Coil switching circuit
Primary coil group
Secondary coil group
Coil switching circuit
Memory
Switching controller
Switching controller

Circuits 46-47 (and circuits 45/48/49) may be "configured on the same IC chip," *e.g.*, "power receiving control IC 50." (Ex. 1005, ¶¶0047-0048, 0057, 0063, 0086-0092, FIGS. 2, 7.) Such circuitry would have been understood as compact integrated circuitry designed to perform certain operations in PRM40, which is consistent with a "**microcontroller**" as understood by a POSITA and in context of the '942 patent. (Ex. 1002, ¶163; Ex. 1001, 27:11-14 and 42:4-6 (exemplifying an "IC" or "chip" as a "microcontroller"); Ex. 1064, ¶0023 (describing a secondary-side module "[as] an *integrated circuit*, such as a *microprocessor*").) The same is true where switching controller 83 is part of such "**receiver communication and control circuit**" since it sends "instructions" to control the switching to select specific coils (when implemented). (Ex. 1005, ¶¶0096-0097, 0100-0106; Ex. 1002, ¶163.) Thus, *Okada-Odendaal-Cho* discloses "**a receiver communication and control circuit including a microcontroller**." (Ex. 1002, ¶163.)

To the extent it is argued/ determined the claimed "microcontroller" requires a processor or the like and *Okada* does not expressly disclose such features, it would have been obvious to configure the "receiver circuit" in PRM40 to include such features because it would have been a foreseeable application of known technologies/techniques in a portable device/system, which uses ICs to perform "control[ler]"-type operations, consistent with *Okada*. (*Supra*; Ex. 1002, ¶164; Ex. 1006, 5:65-6:59, FIGS. 4-5 (controller 40); Ex. 1024, 6:60-7:14 ("microprocessor

controller 308" controlling power-supply operation/modes), FIG. 3; Ex. 1064, ¶0023.) Such a modification would have been an obvious variation/implementation as to how the communication/control circuit (above) performs/provides similar features, while providing known programmable functionalities. A POSITA would have had the skills and rationale to implement such a modification, and given the known technology and *Okada*'s teachings, would have done so with a reasonable expectation of success. (Ex. 1002, ¶164.)

As discussed, modulating circuit 47 (part of "**receiver communication and control circuit**") modulates the carrier wave based on PDA3's information that is sent to PTM10 when the "**receiver circuit**" is powered by the "**charging system**." (§§IX.A.1(e)-(f); Ex. 1005, ¶¶0047, 0056-0058, 0062-0063; Ex. 1002, ¶165.) Circuit 35 then "demodulates modulated signals included with the voltage from" primary coil 19. (Ex. 1005, ¶0042.)

Okada explains that the modulation method may be based on "periodic intensity modulation of a carrier wave and may use a phase modulation method to express 0/1 information via phase change information of a signal." (Ex. 1005, ¶0058.) However, to the extent that *Okada-Odendaal-Kook* does not disclose "**a receiver communication and control circuit…configured *to modulate the current in the coil* to communicate with the inductive charging system while the**

receiver circuit is being powered by the inductive charging system," a POSITA would have found it obvious to implement such features. (Ex. 1002, ¶166.)

A POSITA would have understood that modulating/demodulating a waveform (*Okada*) by using an inherent property thereof (*e.g.*, current) would have been one of "a finite number of identified, predictable solutions" for including/encoding/decoding information to facilitate communications between the portable device and base unit in the modified *Okada* system/device (*e.g.*, used to confirm power reception equipment, verify/determine presence/alignment, full charge status, and/or power level, consistent with that disclosed by *Okada*). (Ex. 1002, ¶¶167-170; Ex. 1005, ¶¶0056-0057, 0062-0064.) *KSR* at 421. Thus, a POSITA would have been motivated to configure the modified *Okada* system to provide current modulation/demodulation-type techniques/technologies to facilitate communications of information via the primary/receiver coils, such that the "microcontroller" in the above-described communication/control circuit would "**modulate the current in the coil** [41] **to communicate with the inductive charging system** [cradle 4]," consistent with that known in the art, while the disclosed "**receiver circuit**" (§IX.A.1(d)) is being powered by the "charging system," consistent with *Okada*'s operations. (Ex. 1002, ¶167; Ex. 1056, Abstract, 2:7-9, 2:38-44, 4:21-34, 5:12-14, 6:12-33; Ex. 1057, 9:20-24, 15:16-21, 21:21-22:3, FIGS. 1-3, 11-13; Ex. 1058, Abstract, FIGS. 1, 3A-8, 3:25-4:35, 5:27-7:23, 10:22-

24, 10:25-12:17.) (Ex. 1001, 27:5-18 (discussing "current modulation" in context of conventional technologies—supporting that such features were known); Ex. 1063; Ex. 1002, ¶¶167-170.)

A POSITA would have had the requisite skills and rationale to implement such features in the *Okada-Odendaal-Cho* system, and done so with a reasonable expectation of success, given the teachings of *Okada* and POSITA's state-of-art knowledge at the time. (Ex. 1002, ¶171.) Especially since such modification would have involved applying known technologies/techniques (known current modulation/demodulation techniques) to predictably yield an inductive power transfer system that facilitates communications consistent with that taught by *Okada*. (*Id.*; §§IX.A.1(g)-(o).) *KSR*, 550 at 416.

g) a voltage regulator coupled to an output of the receiver rectifier circuit and coupled to the microcontroller, wherein the voltage regulator is configured to provide a regulated voltage to power the microcontroller from the received inductive power; and

Okada-Odendaal-Cho in view of *Tetlow* discloses/suggests this limitation. (Ex. 1002, ¶¶172-178.)

In *Okada*, regulator 51 (**brown** below) ("**voltage regulator**") is "**coupled to an output"** of the circuit 44 (part of "**receiver rectifier circuit**" (§IX.A.1(e))) and provides a voltage output to charging control circuit 52 to charge PDA3. (Ex. 1005,

¶¶0047-0048 (while not required, regulator 51 "may be" configured on IC 50); FIG. 2; Ex. 1002, ¶173.)

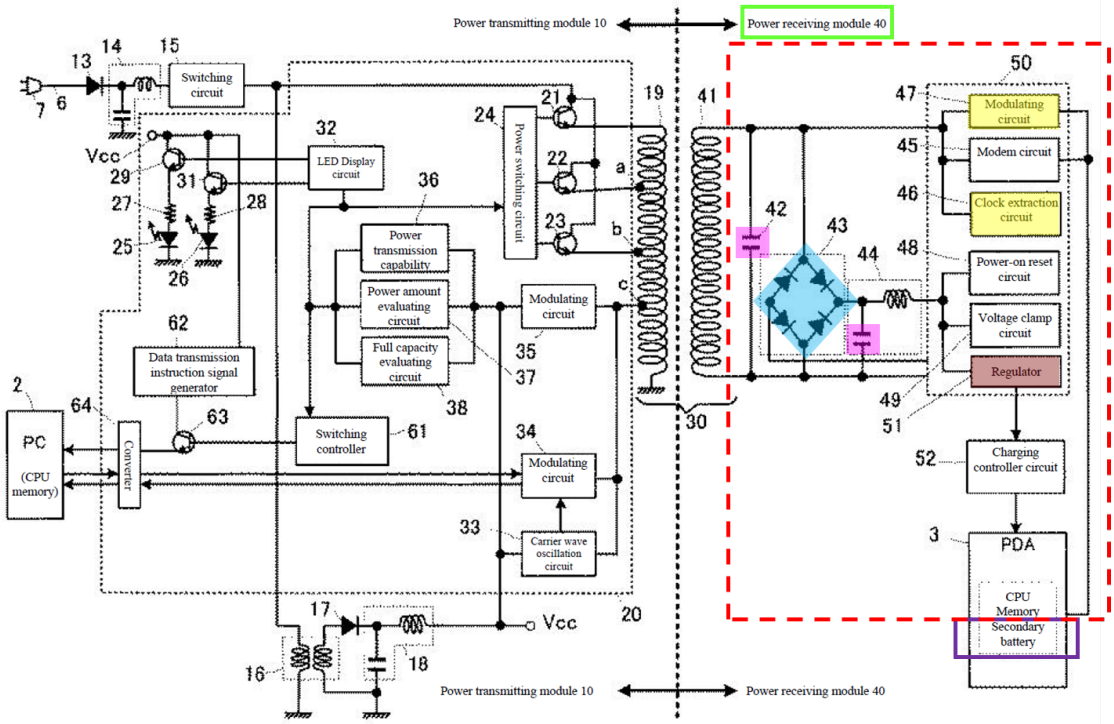

While regulator 51 provides power through circuit 52 to charge PDA3 (containing a battery) (Ex. 1005, ¶0087), *Okada* does not expressly disclose that regulator 51 is "**coupled to the microcontroller…to provide a regulated voltage to power the microcontroller from the received inductive power**." A POSITA, nevertheless, would have been motivated to implement such features in view of *Tetlow*. (Ex. 1002, ¶174.)

Tetlow, like *Okada* (and other combined art), is in the same technical field as the '942 patent and discloses features reasonable pertinent to particular problem(s) the '942 patent inventor and a POSITA was trying to solve. (§§IX.A.1(a)-IX.A.1(g);

Ex. 1064, Abstract, ¶¶0021-0023; Ex. 1001, Abstract, 1:50-7:50, 36:31-41; Ex. 1002, ¶175.) Therefore, a POSITA had reasons to consider/consult *Tetlow* when looking to design/implement the above modified *Okada* combination. (Ex. 1002, ¶175.)

Tetlow discloses a rectifier/control module 33 receives signals inductively generated on a secondary coil 31 and provides rectified signals to regulators 35 (blue below). (Ex. 1064, ¶¶0002 ("secondary…coil in which current is induced"), 0021-0022.) Based on the rectified signal, regulators 35 power "an intelligence module 37 [red below],…typically provided [as] an integrated circuit, such as a microprocessor." (Ex. 1064, ¶0023; *id*., ¶0021-0022.) Regulators 35 provide two power levels, *e.g.*, 22V to a load 36, and 5V to the microprocessor. (*Id*., ¶0023.) Thus, *Tetlow* discloses "**a voltage regulator coupled to an output of [a] receiver rectifier circuit** [*e.g.*, module 33] **and coupled to [a] microcontroller** [*e.g.*, module 37] **to provide a regulated voltage to power the microcontroller from the received inductive power**." (Ex. 1002, ¶176.)

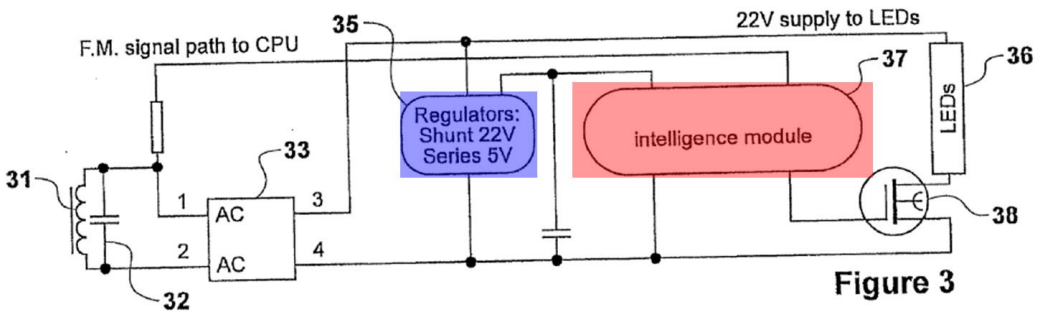

Figure 3

In light of such teachings/suggestions, a POSITA would have been motivated and found it obvious to implement a "**voltage regulator**" in the above-modified *Okada* device that receives the rectified signals from the "**receiver rectifier circuit**" (§IX.A.1(f)) to "**provide a regulated voltage to power the microcontroller**" (§IX.A.1(g)) "**from the received inductive power output**" that was received by the receiver coil 41 (that is rectified/smoothed via circuits 43/44). (Ex. 1002, ¶177.) Consistent with that known in the art, such configuration would have ensured that the "microcontroller" receives a constant/stabile voltage suitable for powering/operating the microcontroller and related circuitry to prevent potential voltage irregularities at the receiver rectifier circuit output, which may damage components during operations. (Ex. 1002, ¶177; Ex. 1065, ¶¶0033-0039 (voltage converter/regulator used to avoid "voltage spikes" and increase "operating reliability"), claims 1-7, FIG. 1.) A POSITA would have been motivated to consider/configure such a modification in various ways, including modifying regulator 51 to provide such regulation operations for power the "microcontroller" and supply regulated voltage to charge controller 52, or implementing a complimenting voltage regulator circuit dedicated for regulating voltage for the "microcontroller." (Ex. 1002, ¶177.)

A POSITA would have had the skill and rationale to implement, and reasonable expectation of success in achieving, such modification. (Ex. 1002, ¶178.)

Especially since to the benefits of using a voltage regulator to provide stabilized voltage/power to controller circuitry to mitigate issues, *e.g.*, voltage spikes/irregularities, damage to components. (*Supra*.) Thus, such modification would have involved applying known technologies/techniques to yield the predictable result of a portable device with conventional voltage regulator mechanisms to provide stabile voltage for powering electrical components in an inductive power transfer system, consistent with that discussed by *Okada*, *Tetlow*, and known in the art. (Ex. 1002, ¶178.) *KSR* at 416-18.

h) a battery charging circuit configured to charge the battery, wherein the battery charging circuit is coupled to the output of the receiver rectifier circuit and coupled to the battery and is configured to begin drawing current when the output of the receiver rectifier circuit reaches a set minimum voltage value;

Okada-Odendaal-Cho-Tetlow in view of *Nguyen* discloses/suggests this limitation. (Ex. 1002, ¶¶179-185.)

As explained and shown below, the "**receiver circuit**" (§IX.A.1(d) (red)) includes charging control circuit 52 ("**battery charging circuit**") (green), which is coupled to the output of the "**receiver rectifier circuit**" (§IX.A.1(e) (variations of circuits 42/43/44 (magenta/blue/orange))) via regulator 51 and also to the battery (purple). (Ex. 1005, ¶0047, FIG. 2 (below); §§IX.A.1(a)-(b), (e)-(g); Ex. 1002, ¶180.)

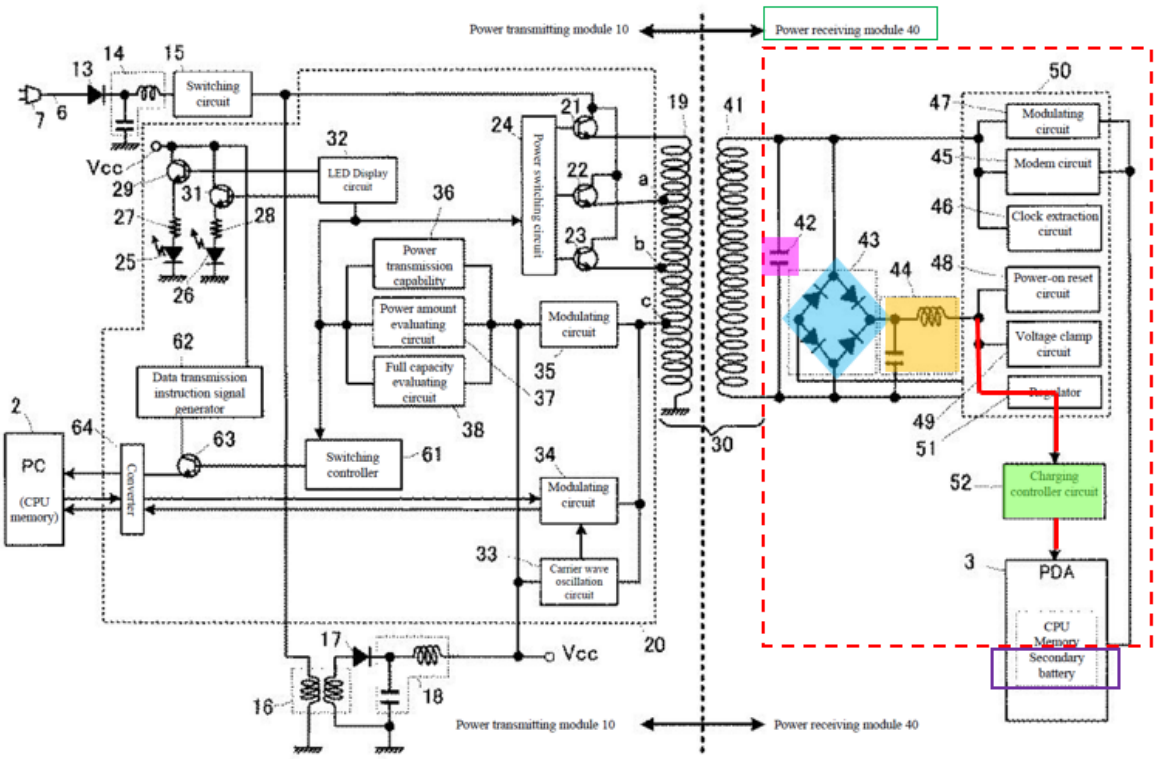

To the extent that *Okada* does not disclose that circuit 52 "**begin[s] drawing current when the output of the receiver rectifier circuit reaches a set minimum voltage value**," a POSITA would found it obvious to implement such features in view of *Nguyen*. (Ex. 1002, ¶181.)

Nguyen discloses technologies/techniques for providing/supplying power from one system to another (subsystem), which a POSITA would have found relevant/helpful to inductive power transfer system/component designs/implementations, like those disclosed by *Okada* and other asserted prior art (§§IX.A.1(a)-(g); Ex. 1002, ¶182; Ex. 1066, Abstract, ¶¶0002-0004). Thus, *Nguyen* is in the same technical field as the '942 patent and discloses features reasonable

pertinent to particular problem(s) the '942 patent inventor and a POSITA was trying to solve. (*Id.*; Ex. 1001, Abstract, 1:45-46, 12:33-13:8; Ex. 1002, ¶182.) Therefore, a POSITA had reasons to consider/consult *Nguyen* when looking to design/implement the above–discussed *Okada* combination. (Ex. 1002, ¶182.)

In *Nguyen*, a pass device N10 (red below) controls power supplied from supply 22 to subsystem 26, where N10 is controlled by control electronics 24 (blue) and coupled to a voltage regulator or diode D1 to manage the "startup characteristics" of the power transfer. (Ex. 1066, ¶¶0029-0030.) "[C]ontrol electronics 24…determines the **under-voltage lockout voltage level**," which "may be programmed" to "set" a "minimum" output voltage from supply 22—required to turn on device N10—to "start supplying power to subsystem 26." (*Id.*, ¶0030.) As a POSITA would have understood, given that when N10 (*e.g.*, a MOSFET) is turned off (*id.*, ¶0029) little-to-no current flows through N10, subsystem 26 draws little-to-no current from supply 22. (Ex. 1002, ¶183.) Thus, only when the set minimum output voltage (from supply 22) is reached (which turns on N10), subsystem 26 begins to draw current ("**begins drawing current when the output of [a] receiver rectifier circuit reaches a set minimum voltage value**"). (*Id.*, ¶183.)

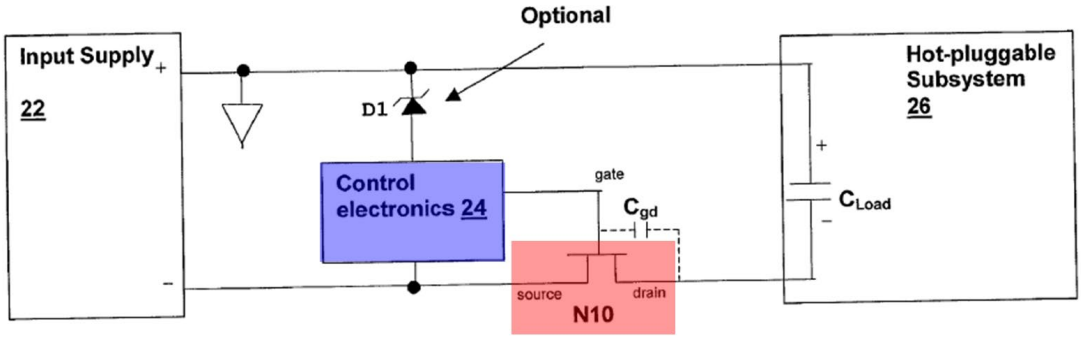

In light of such teachings/suggestions, a POSITA would have been motivated and found obvious to configure/modify the charge control circuit 52 in the "**receiver circuit**" (§IX.A.1(d)) of the modified *Okada* portable device to implement features similar to *Nguyen*'s under-voltage lockout (UVLO) features such that it would begin drawing current when the output of the "**receiver rectifier circuit**" reaches a set minimum voltage value for charging the battery. (Ex. 1002, ¶184.) A POSITA would have appreciated *Nguyen*'s guidance that such features (e.g., a UVLO circuit) would "keep[] the rest of the circuitry of an integrated circuit disabled until the power supply reaches a specified level," such that "[the] circuit would *keep the integrated circuit supply current at zero until the specified voltage is reached*." (Ex. 1066, 3:34-41; Ex. 1002, ¶184.) Also that similar features implemented in the modified *Okada* device as noted above would have prevented unwanted power/current drawn by PDA3/battery that does not meet its required operating/powering requirements, consistent with *Okada*'s and *Nguyen*'s teachings. (Ex. 1066, 3:34-41; Ex. 1002, ¶184; Ex. 1005, ¶¶0057, 0069.) Especially since it

was conventional practice to control a battery charging process to prevent over/under-charging the battery, consistent with that described by *Okada*. (Ex. 1002, ¶184; Ex. 1005, FIG. 3, ¶¶0074-0077; Ex. 1037, 1:35-2:22.)

A POSITA would have had the skill and rationale to configure/implement, and reasonable expectation of success in achieving, such modification. (Ex. 1002, ¶185.) Especially where, as noted, it was known to employ mechanism/features to control power/current draw when supplying power to a device/battery to mitigate potential damage or undesired operations. (*Id.*) Thus, such modification would have involved applying known technologies/techniques to yield the predictable result of a portable device having a battery charging circuit that safely draws current when *e.g.,* the receiver rectifier circuit output reaches a set minimum voltage value, consistent with that discussed above by *Nguyen* and known in the art. (*Id.*) *KSR* at 416-18.

i) wherein when a current is generated in the coil inductively by the primary coil: the receiver rectifier circuit is configured to rectify and smooth the current, the voltage regulator is configured to use the current to power and activate the microcontroller, and the battery charging circuit is configured to use the current to charge the battery of the portable device; and

The *Okada-Odendaal-Cho-Tetlow-Nguyen* combination discloses/suggests this limitation. (Ex. 1002, ¶¶186-188.) As explained, signal(s) transmitted from coil 19 in the modified system inductively generates a current in coil 41 ("**current is**

generated in the coil inductively by the primary coil"). (§§IX.A.1(a)-(c), IX.A.1(e).) Indeed, when PDA3 is placed on cradle 4, circuit 33 of PTM10 applies a carrier wave to primary coil 19, and a voltage, and thus current, is induced on secondary coil 41. (*Id.*; Ex. 1005, ¶¶0056-0057, 0062-0063; Ex. 1002, ¶186.) The induced current is rectified/smoothed by circuits 42/43/44 ("**receiver rectifier circuit is configured to rectify and smooth the current**.") (Ex. 1005, ¶¶0047, 0057, 0063; §IX.A.1(e).)

The analysis for limitation 21(g) explains that, in the modified *Okada* device/system, a "**voltage regulator**" is implemented/configured such that it "provide[s] a regulated voltage to power the microcontroller" as implemented in the modified portable device. (§IX.A.1(g).) For similar reasons, rationale, and with a similar expectation of success as explained for limitation 21(g), a POSITA would have understood and/or been motivated to configure, the above-discussed "**voltage regulator**" such that when it provide(s) "**power**" to the "**microcontroller**," it "**activate[s]**" it to facilitate the feedback control operations discussed by *Okada* (*e.g.*, activate circuits 46/47 (part of "**microcontroller**" (including as configured/modified)) to generate/transmit device information to PTM10 for controlling power transfer operations). (Ex. 1002, ¶187; §§IX.A.1(a)-(h).) Such modification would have been consistent with *Okada*'s teachings, which explains that the rectified/smoothed current from the "**rectifier circuit**" is used to

power/activate circuits 46/47. (Ex. 1005, ¶0058 (the signal "generated by a carrier wave provided by…circuit 33 can be used as a driving power source for the clock extracting circuit 46 and the modulating circuit 47"), ¶¶0056-0057; §§IX.A.1(d)-(h); Ex. 1002, ¶187.) Thus, for reasons discussed above, a POSITA would have found it obvious to configure the "**voltage regulator**" (§IX.A.1(g)) to use the rectified/smoothed voltage from the "rectifier circuit" (§IX.A.1(e)) "**to power and activate the microcontroller**." (Ex. 1002, ¶187.)

The analysis for limitation 21(h) also explains how, in the modified *Okada* device/system, a "**battery charging circuit**" is implemented/configured such that it is "coupled to the output of the receiver rectifier circuit and coupled to the battery" such that the "**battery charging circuit**" uses the rectified/smoothed output (including "**current**") "**to charge the battery of the portable device**." (§IX.A.1(h); Ex. 1002, ¶188.) For similar reasons, rationale, and with a similar expectation of success as explained for limitation 21(h), a POSITA would have understood and/or been motivated to configure, the above-discussed "**battery charging circuit**" such that it uses the "**current [] rectified and smoothed by the receiver rectifier circuit…to charge the battery of the portable device**," consistent with the teachings of *Okada*. (*Id.*; Ex. 1005, ¶¶0047 (power-on reset circuit 48 receives the rectified/smoothed output signal of circuits 43/44 and provides "drive instructions to the power receiving control IC 50" to power/charge PDA3 using voltage clamp

circuit 49, regulator 51, and charging control circuit 52), 0049-0051, 0057-0073, FIG. 3; §§IX.A.1(a)-(h); Ex. 1002, ¶188.)

j) wherein upon powering and activation of the receiver circuit by the primary coil, the receiver circuit is configured to:

k) communicate to the inductive charging system information corresponding to a voltage or current value at the output of the receiver rectifier circuit induced by the primary coil, a unique identifier code, and a power requirement; and

Okada-Odendaal-Cho-Tetlow-Nguyen in view of *Berghegger* and *Calhoon* discloses/suggests this limitation. (Ex. 1002, ¶¶189-204.)

The analysis for limitation 21(i) explains how in the modified *Okada* system/device, the "**microcontroller**" (part of "**receiver circuit**") is powered and activated via the "**voltage regulator**'s" use of the rectified/smoothed current generated in the receiver coil inductively by the primary coil to facilitate the feedback control power/charge transfer operations discussed by *Okada*. (§IX.A.1(i); Ex. 1002, ¶190.)

As explained, those power/transfer operations include circuit 33 in PTM10 applying a carrier wave to primary coil 19, which is used (after rectification/smoothing (circuits 42/43/44)) to power/activate *e.g.*, circuits 46/47 (§IX.A.1(g)) and cause power-on reset circuit 48 to "drive instructions" to "control IC 50" to power/charge PDA3/battery. (§IX.A.1(j).) To configure the system to

transfer appropriate power for the specific portable device (PDA3), circuit 47 modulates a carrier wave, based on PDA3's information, and provides the signals to PTM10 through receiver coil 41 and primary coil 19. (Ex. 1005, ¶¶0057, 0064, FIG. 3.) After demodulation (circuit 35), evaluation circuits 36/37/38 of PTM10 use that information to "perform various decision-making processes" associated with powering/charging PDA3/battery. (Ex. 1005, FIG. 2, ¶¶0042, 0057; *id.*, FIG. 3, ¶¶0060-0077; §§IX.A.1(b)-(c), IX.A.1(g).) The device information modulated by circuit 47 (part of "**receiver circuit**" (§IX.A.1(d))) includes, *e.g.*, "power consumption information" ("**a power requirement**") that is used to determine the power requirement/level for PDA3/battery. (Ex. 1005, ¶¶0057, 0063-0064, 0069-0073, FIG. 3.) (Ex. 1002, ¶191.)

Thus, for reasons explained above, the modified *Okada* system would have been configured to perform similar features in accordance with the configurations to PTM10/PRM40 components as explained above, such that "**upon powering and activation of the receiver circuit by the primary coil, the receiver circuit is configured to…communicate to the inductive charging system information corresponding to a… a power requirement**." (§§IX.A.1(a)-IX.A.1(i); Ex. 1002, ¶191.)

While not expressly stated/disclosed by *Okada*, a POSITA would have found it obvious to configure the modified *Okada* device/system to include in such

communication, "**information corresponding to a voltage or current value at the output of the receiver rectifier circuit induced by the primary coil**," in view of *Berghegger*. (Ex. 1002, ¶192.)

Berghegger discloses a system for inductively powering/charging a device/battery. (Ex. 1006, FIGS. 1a-1b, 4-6, Abstract, 1:65-2:17, 2:18-3:30, 5:27-30, 6:12-19, 6:37-45.) A controller 40 drives capacitor C_P and primary-side inductor L_P that is "magnetically coupled to" secondary-side inductor L_S to induce an AC voltage on L_S, which is rectified by rectifier GL and supplied to load R_L (including a battery). (Ex. 1006, FIG. 4 (below), 3:58-61, 4:12-6:4, 6:5-15, 6:38-40 ("charging tray" and "mobile...telephone"); Ex. 1002, ¶¶85-93, 193.)

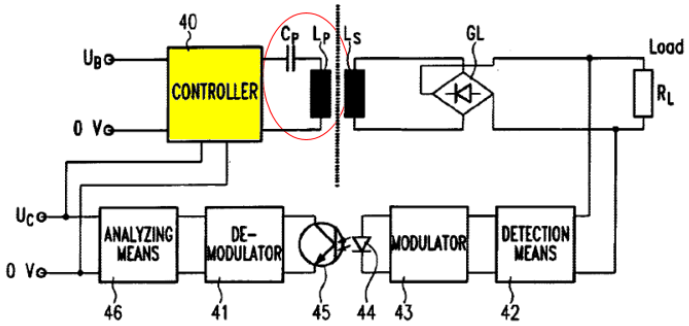

Fig.4

As demonstrated above and below, *Berghegger* is in the same technical field as the '942 patent and *Okada* (with the other asserted art), and discloses features reasonable pertinent to particular problem(s) the inventor for the '942 patent (and POSITA) was trying to solve. (§§IX.A.1(a)-(k); Ex. 1001, Abstract, 1:50-7:50; Ex.

1006, Abstract, 2:18-20; Ex. 1002, ¶194.) Accordingly, a POSITA would have consulted *Berghegger* when designing/implementing the above-discussed modified *Okada* device/system. (Ex. 1002, ¶194.)

Indeed, similar to *Okada*'s closed-loop feedback power/charging operations (Ex. 1005, ¶¶0057, 0064; *supra*), *Berghegger* uses a closed-loop feedback configuration, where controller 40 receives a control signal U_C that "depends on the power demand of the secondary side," *e.g.*, the voltage across the load R_L ***or at the output of a receiver rectifier circuit GL*** to perform charging operations, including regulating/adjusting the output power/voltage provided to the load. (Ex. 1006, Abstract, 3:51-4:50, 4:51-61, 4:62-5:64, 6:16-29, 6:60-61). The FIG. 5 configuration (below) is similar to FIG. 4 (Ex. 1006, 5:65-6:37), but where U_C is provided using coils L_S and L_P. (*Id.*, 6:50-53, 6:53-8:8; Ex. 1002, ¶195.)

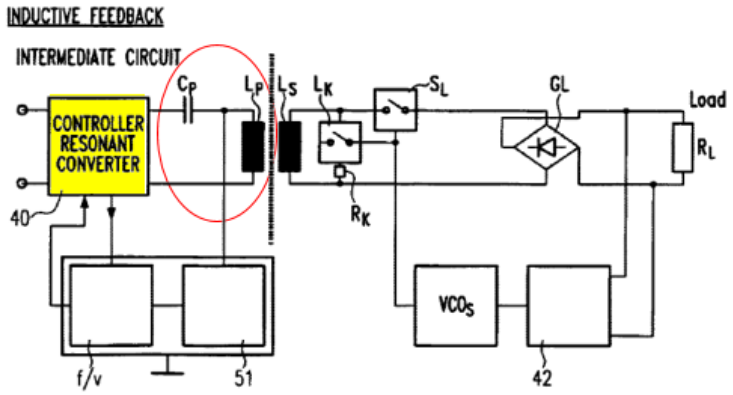

Fig.5

Thus, *Berghegger* discloses providing to a charger "**information corresponding to a voltage or current value at the output of [a] receiver rectifier circuit induced**

by [a] primary coil." (*Id.*; Ex. 1002, ¶195.) Controller 40 is capable of adjusting power levels **during** charging to provide a more efficient power signal via a closed-loop feedback arrangement based on the voltage across the load R_L or output of rectifier GL. (*Supra*; Ex. 1002, ¶195.)

A POSITA would have appreciated the benefits/advantages *Berghegger*'s techniques/configurations would have provided to the modified *Okada* system/device (§§IX.A.1(a)-(j).) Namely, a POSITA would have recognized that the modified system/device, operating consistent with *Okada*'s teachings, would use device information to control/adjust power delivery in a closed-loop feedback fashion, but have done so at the **onset** of charging, **not during** charging. (Ex. 1005, ¶¶0069-0076, FIG. 3; Ex. 1002, ¶196.) In contrast, *Berghegger* teaches that power required by a load "is **variable in time**" and thus a closed-looped control feature (similar to that described by *Berghegger*) would allow for accurate adjusted power delivery based on a varying power demand **during** powering/charging operations, considered at the output of a rectifier circuit (that supplies rectified signal(s) to the load) (*e.g.*, control signal U_C that "depends on the power demand of the secondary side," *e.g.*, voltage across the load R_L or output of rectifier GL). (Ex. 1006, 6:12-15, FIG. 5; *supra—Berghegger*.)

Thus, *Berghegger*'s teachings would have motivated a POSITA to configure the modified *Okada* system/device such that PTM10 components adjusts power

delivered to PDA3 based on received device information associated with a "**voltage or current value at the output of the receiver rectifier circuit**" (§IX.A.1(e)) similar to the teachings of *Berghegger*. (Ex. 1002, ¶197.) A POSITA would have recognized obtaining/including such rectifier output value information in the information communicated in the current modulated signal(s) from the "receiver circuit" in PRD40 (§§IX.A.1(f) (current modulation), IX.A.1(i), IX.A.1(j)—above) would have improved/complimented the above-modified *Okada* system/device to allow fine tuning of the determined power level while PDA3/battery is charged. (Ex. 1002, ¶197.) For example, it would ensure "a sufficient amount" of power is "available on the secondary side" **during** power delivery (whether initiated at a low/intermediate/high level as in *Okada*) while also preventing "an unnecessarily large amount of energy being consumed on the primary side" to achieve a "more energy-efficient continuous operation" as suggested by *Berghegger*. (*Id.*; Ex. 1006, 2:28-44; Ex. 1005, ¶¶0069-0073).

A POSITA would have considered/implemented such modification in various ways. (Ex. 1002, ¶198.) For example, a POSITA would considered leveraging/modifying *Okada*'s features/components that are used to receive/pass/process device information in PTM10 for power transfer control (*e.g.*, demodulator 35, circuits 36-38 (Ex. 1005, ¶0064)) to achieve the noted beneficial power delivery features during charging/powering operations. For example,

components in circuit 20 would have been configured to process/assess the received rectifier circuit current/voltage output value to provide a signal (like U_C in *Berghegger*) to control the operating frequency of the charger components/circuits that facilitate the transfer of selected power (*e.g.*, switching circuit 15, etc.) to adjust power delivery during charge operations. (Ex. 1002, ¶198.)[6]

A POSITA would have had rationale and skills to implement, and expectation of success in achieving, such modification, especially since it would have involved the use of known technologies/techniques (*e.g.*, as disclosed/suggested by *Okada-Berghegger*) that would have predictably led to the modified *Okada* system including in the information communicated from the "**receiver circuit**" "**information corresponding to a voltage or current value at the output of the receiver rectifier circuit induced by the primary coil**" as claimed. (Ex. 1002, ¶199.)

A POSITA would have also been motivated, and found obvious, to consider and implement use of other information to further such power transfer control operations, especially in light of *Calhoon*. (Ex. 1002, ¶200.) *Calhoon* is in the same

[6] Other successful designs/configurations would have been contemplated/implemented by a POSITA to achieve the same features/functionalities as discussed. (Ex. 1002, ¶198.)

technical field as *Okada* (and the other asserted art) and the '942 patent, and discloses features reasonable pertinent to particular problem(s) the inventor for the '942 patent and POSITA was trying to solve. (§IX.A.1(a); Ex. 1041, FIGS. 3, 5A, 6, ¶¶0003-0010, 0022, 0029, 0034, 0045-0050, 0065; 1005, ¶0110, 0147-0151; Ex. 1001, 1:50-7:50; *infra*; Ex. 1002, ¶200.) Thus, *Calhoon* would have been consulted by the inventor and POSITA looking to design/implement a power/charging apparatus/system like that described by *Okada* (as modified above). (Ex. 1002, ¶200.)

Calhoon discloses an inductive charging system for a mobile device's battery charger/battery pack. (Ex. 1041, Abstract, FIGS. 2-3 (below), ¶¶0002, 0008-0010, 0022-0029, 0045, 0065; Ex. 1002, ¶¶104-106, 201.)

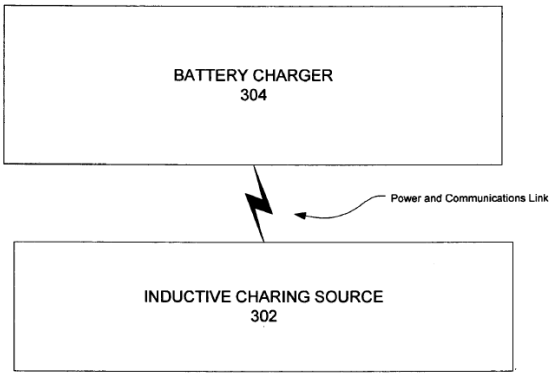

FIGURE 2

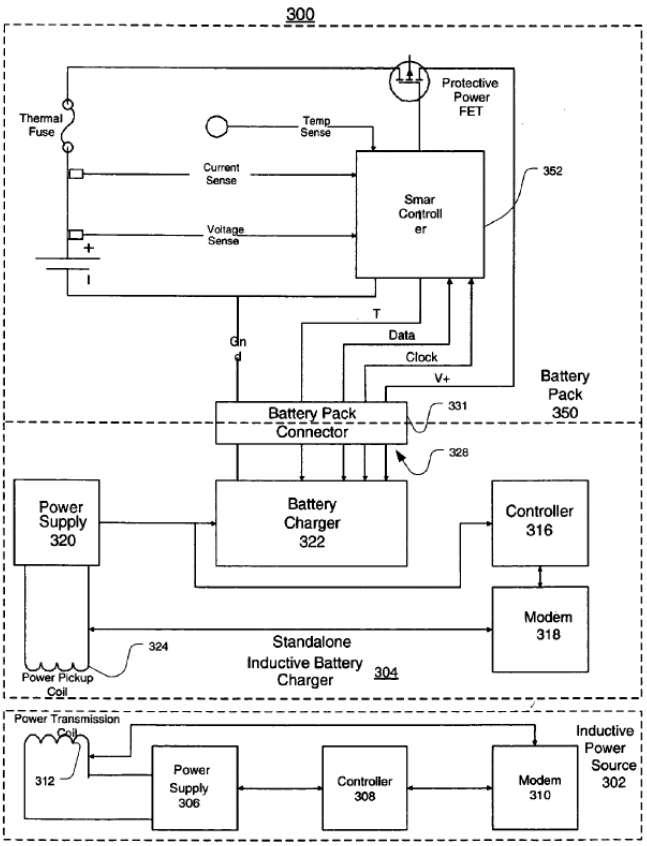

FIGURE 3

Calhoon describes obtaining an **ID/serial number of a power receiver**, *e.g.*, a battery charger (charger assembly 304) or a battery (battery pack 350) and wirelessly communicating that information to a power source (*e.g.*, inductive charging source 302). (*Id.*, Abstract, ¶¶0022, 0034, 0046-0048, 0050-0052, 0056, FIGS. 3, 5A, 6; Ex. 1002, ¶202.) Controller 316 in battery charger 304 may include data, "such as **a battery charger ID number**, **serial number**, **manufacturer's name**," which can be used "for novel power operations…, such as shown in FIGS. 5A, 5B, and 6." (Ex. 1041, ¶0038; *id.*, FIGS. 5A-6, ¶¶0034, 0042-0044, 0045-0048, 0049, 0050-0052, 0056.) Charging source 302 "can request other information

relevant to the battery charger assembly 304" (e.g., battery charger ID or charger/battery pack serial number), which charger assembly 304 transmits. (*Id.*, ¶0047.) Thus, *Calhoon*'s power receiver includes "**a manufacturer code**" (*e.g.*, serial number and/or manufacturer's name) and "**a unique identifier code**" (*e.g.*, a battery charger ID number), consistent with *Calhoon*'s disclosure that the information "can be used **for security, data integrity**, or other purposes." (Ex. 1041, ¶0047; *id.*, FIGS. 3-5A, ¶¶0036-0037, 0040-0043.) (Ex. 1002, ¶202.)

In light of such teachings/suggestions, a POSITA would have been motivated, and found obvious, to further configure the above-modified *Okada* system to include in the information communicated by the disclosed "**receiver circuit**" device serial number and/or manufacturer's name information ("**unique identifier code**") to verify and/or authenticate each portable device for proper/authorized use. (Ex. 1002, ¶203.) Thus, in light of *Calhoon*, a POSITA would have been further motivated to configure the above-modified *Okada* system/device to maintain, transmit, and use such identifier information to ensure a properly verified and positioned/aligned portable device receives appropriate power in accordance with the charging/power operations discussed above. (§§IX.A.1(a)-IX.A.1(i); *supra* (this section); Ex. 1002, ¶203.) *KSR* at 416-18.

A POSITA would have had the skill and rationale in implementing, and reasonable expectation of success in achieving, such modification, especially where implementing it would have involved applying known technologies/techniques (*Okada*, *Calhoon*) to verify/authenticate/confirm receiving device(s) to control power transfer in accordance with the modified operations/components discussed above. (*Id.*; Ex. 1002, ¶204.)

l) periodically communicate to the inductive charging system additional information corresponding to a presently induced output voltage or current of the receiver rectifier circuit to enable the inductive charging system to regulate in a closed loop feedback manner the output voltage or current of the receiver rectifier circuit during the charging of the portable device.

The *Okada-Odendaal-Cho-Tetlow-Nguyen-Berghegger-Calhoon* combination discloses/suggests this limitation. (Ex. 1002, ¶¶205-208.)

As explained for limitation 21(k), the modified *Okada* system would have been configured to communicate information corresponding to a voltage or current value at the output of the receiver rectifier circuit induced by the primary coil upon activation/power of the microprocessor. (§IX.A.1(k).) Also explained for *e.g.*, limitations 21(j)-(k), the modified system/device would have been configured to provide a "**closed loop**" feedback operations that allow the system/device to control/regulate the power delivered for charging a specific portable device/battery (*e.g.,* PDA3/battery) by using information associated with a "voltage or current value

at the output of the receiver rectifier circuit" induced by the primary coil. (§§IX.A.1(i)-IX.A.1(k); Ex. 1002, ¶206.)

As *Okada* explains, "[e]ven after power transmission has begun," device information is periodically/continuously transmitted from PRM40 to PTM10 in response to the periodic/continuous transmission of the carrier wave by circuit 33, to maintain/control power delivery operations. (§§IX.A.1(a)-(b), IX.A.1(f), IX.A.1(i); Ex. 1005, ¶0074-0077, FIG. 3 (below); Ex. 1002, ¶207.)

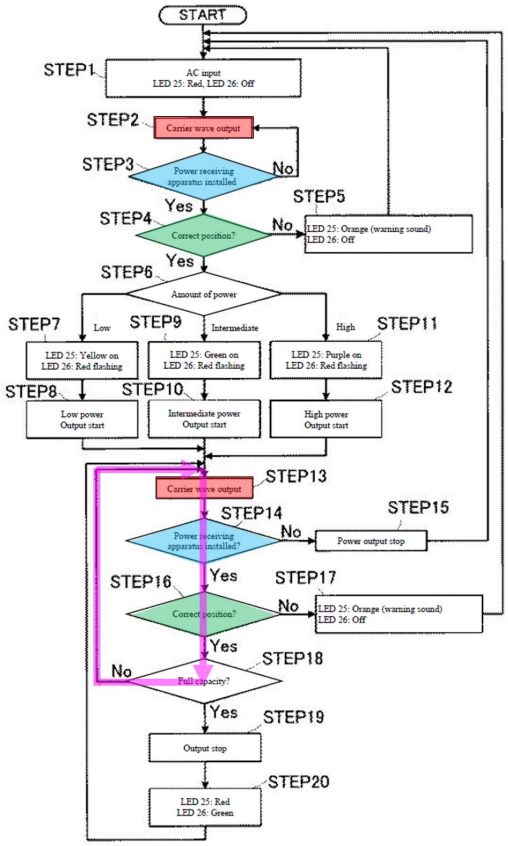

Thus, consistent with *Okada*'s teachings (and *Berghegger* (*see* §§IX.A.1(j)-(k))) in context of the above-discussed modified *Okada*'s system/device, and for

similar reasons explained above (including rationale, POSITA's skills/knowledge and expectation of success), a POSITA would have found it obvious to configure the above-discussed modified system/device such that the "**receiver circuit**" (§IX.A.1(d)) "**periodically communicate[s] to the inductive charging system** [cradle 4] **additional information corresponding to a presently induced output voltage or current of the receiver rectifier circuit**" (voltage measured at the output of the "rectifier circuit" (§IX.A.1(g))). (§§IX.A.1(h)-(k); Ex. 1002, ¶208.)

Such "**information**" would have enabled cradle 4 to "**regulate in a closed loop feedback manner the output voltage or current of the receiver rectifier circuit during the charging of the portable device**," consistent with that discussed above for limitations 21(j)-(k), because, as explained, the modified *Okada* system/device would have been configured to provide/adjust power transfer based on the device power demand information, *e.g.*, voltage measured at the output of a rectifier circuit, communicated by PDA3's "receiver circuit" in a closed loop manner during charging/powering of a portable device, consistent with the periodic/continuous feedback operations described by *Okada-Berghegger*. (§§IX.A.1(i)-(k); Ex. 1002, ¶208.) Thus, a POSITA would have had similar motivation, capability, and expectation of success to implement such features as those explained above for limitations 21(i)-(k). (Ex. 1002, ¶208.)

2. Claim 24

a) The portable device of claim 21, wherein the receiver circuit further comprises a limiter to limit the output voltage of the receiver rectifier circuit to a maximum value within a safe operating range of the battery charging circuit.

The *Okada-Odendaal-Cho-Tetlow-Nguyen-Berghegger-Calhoon* combination discloses/suggests this limitation. (Ex. 1002, ¶¶209-212; §IX.A.1.)

As discussed in limitation 21(f), voltage clamp circuit 49 (optional part of "**communication and control circuit**" of the "**receiver circuit**") may further include voltage clamp circuit 49 that "receives the output from the smoothing circuit 44 and converts the output to a prescribed voltage." (§IX.A.1(f); Ex. 1005, ¶¶0047-0048; Ex. 1002, ¶210.) As a POSITA would have understood, a clamp circuit (like that disclosed by *Okada*), was known to provide a voltage not exceeding a certain set limit. (Ex. 1002, ¶210; Ex. 1067, Abstract, ¶0005 ("voltage supply…***rises to the clamp voltage limit controlled by the high voltage clamp 130***."), claim 1.)

A POSITA was also aware that excessive voltage to a device/battery can cause damage or undesirable operations, and thus would have considered design options to avoid/mitigate such issues. (Ex. 1002, ¶210; Ex. 1065, ¶¶0033-0039 (voltage converter/regulator used to avoid "voltage spikes" and increase "operating reliability"); Ex. 1060, ¶¶0013, 0016, 0097 ("battery protection circuitry [] necessary

to keep the cell in a safe operating region").) Indeed, *Okada* provides mechanisms that can prevent overcharging PDA3's battery. (Ex. 1005, FIG. 3, ¶¶0074-0077.)

Recognizing *Okada*'s use of a clamp circuit in context of such knowledge/understandings, a POSITA would have been motivated, and found obvious, to modify the "**receiver circuit**" in the modified *Okada* device to include voltage limiting circuitry/component ("**limiter**") and/or configure the voltage clamp circuit 49 to include mechanisms/circuitry, to limit the output voltage of the "**receiver rectifier circuit**" (§IX.A.1(e)) to be within a range that allows safe/proper operation of the "**battery charging circuit**" (§IX.A.1(h)). (Ex. 1002, ¶211.)

A POSITA understood different devices/battery components have different power characteristics. (Ex. 1002, ¶211; Ex. 1007, ¶0003; Ex. 1037, 1:56-2:6, 2:18-19, 6:51-7:2, 7:36-53, FIGS. 4A-4C; Ex. 1039, Abstract, 3:23-35, FIG. 1, 5:20-34.) Also that such components have designed/specified maximum operating characteristics (*e.g.,* max current/voltage/power, etc.) to ensure proper and safe operations. (Ex. 1002, ¶211; Ex. 1001, 67:26-27 ("electronic devices generally need to satisfy regulatory and safety requirements…").) Indeed, a POSITA would have understood that each circuit component, including the "**battery charging circuit**" and the battery it charges, cannot sustain a signal having an excessively high voltage level, and thus have respective/corresponding finite operating voltage range(s) that the designer/manufacture deemed safe to operate within. (Ex. 1002, ¶211.)

Consistent with such knowledge, a POSITA would thus have been motivated, and found obvious, to configure the modified device/system's "receiver circuit" with "**a limiter to limit the output voltage of the receiver rectifier circuit to a maximum value within a safe operating range of the battery charging circuit**" as claimed. (Ex. 1002, ¶211.)

A POSITA would have had the skill and rationale, and reasonable expectation of success in achieving, such modification, especially since it would have involved use of known technologies/techniques (*e.g.,* voltage clamps, limiter circuitry, overcharging mechanisms/techniques for blocking excessive voltage signals to protected components). (Ex. 1002, ¶212; *Okada*, Ex. 1067; Ex. 1060, ¶0087.) Such modification would have predictably yielded an inductive power transfer system with a portable device having a clamp/limiter that ensures the voltage of its receiver rectifier circuit provided to a battery charging circuit (§§IX.A.1(g)-(l)) is within a safe operating range, as discussed. (Ex. 1002, ¶212.) *KSR* at 416-18.

B. Ground 2: Claim 22 is obvious over *Okada, Odendaal, Cho, Tetlow, Nguyen, Berghegger*, *Calhoon*, and *Shima*

1. Claim 22

a) The portable device of claim 21, wherein the coil is formed in a flexible Printed Circuit Board (PCB) of multiple layers of substantially spiral-shaped conductor coil patterns electrically connected with vias.

The *Okada-Odendaal-Cho-Tetlow-Nguyen-Berghegger-Calhoon* combination in view of *Shima* discloses/suggests this limitation. (Ex. 1002, ¶¶213-220; §IX.A.1.)

Odendaal discloses that a receiver coil may be "a set of **spiral coils**…with each spiral being a conductor trace **on a separate substrate**, such as **flex** or **printed circuit board**" (Ex. 1008, 2:19-28, 3:41-48 (multi-layer coils)) and that "number of turns of spirals" may be adjusted (*id.*, 6:59-64) ("**flexible…(PCB) of multiple layers of substantially spiral-shaped conductor coil patterns**"). In addition to reasons discussed above for modifying *Okada* in view of *Odendaal*, a POSITA would have been motivated and found obvious to include these features, *e.g.*, receiver coil 41 made of a flexible PCB having a set of multi-layer spiral-shaped conductor coil patterns, when implementing the *Okada-Odendaal* system. (Ex. 1002, ¶214.) It would have allowed forming flexible coils/substrate to be used in portable devices having different configurations and surfaces (*e.g.,* rigid, curved, flexible) consistent with *Okada*. (Ex. 1002, ¶214; §IX.A.1(a).) Moreover, multi-layer spiral-shaped coils were known to increase the generated magnetic field. (Ex. 1002, ¶214; Ex. 1008, 3:41-48.)

A POSITA would have had the skills and rationale in light of the teachings/suggestions of *Okada-Odendaal*, and state-of-art knowledge, to implement the above-modification while considering design tradeoffs and

techniques/technologies with a reasonable expectation of success. Especially given such modification would have involved known technologies/techniques (*e.g.*, flexible PCB having layers of spiral-shaped conductor coil patterns) to yield the predictable result of expanding/complementing applications of the portable devices and charging systems contemplated by *Okada-Odendaal*. (Ex. 1002, ¶215; §IX.A.1(a).) *See KSR* at 416-18. A POSITA would have been further motivated to implement such modification in light of *Shima*, as explained below. (Ex. 1002, ¶215.)

Indeed, to the extent the modified *Okada* combination above does not expressly disclose a receiver coil formed in a flexible PCB coils having "**multiple layers of spiral-shaped conductor coil patterns electrically *connected with vias***," a POSITA would have found it obvious to do so given that was a common design for interconnecting multi-layer PCB circuit arrangements, as exemplified by *Shima*. (Ex. 1002, ¶216.)

Shima, like *Okada-Odendaal*, discloses an inductive power/signal transfer system using primary and secondary coils (Ex. 1032, Abstract, 1:42-50, 2:12-4:10, 5:62-6:53, 7:17-8:38), and thus is similarly in the same technical field as the '942 patent, and discloses features reasonably pertinent to particular problem(s) the '942 patent inventor and a POSITA was trying to solve. (§IX.A.1; Ex. 1001, Abstract, 1:50-7:50; Ex. 1002, ¶217.) Therefore, a POSITA had reasons to consider/consult

Shima when looking to design/implement the above-discussed modified *Okada* device/system. (Ex. 1002, ¶217.)

Shima discloses the known use of coils having similar spiral patterns that reside on different layers of PCBs ("multiple layers of substantially spiral-shaped conductor coil patterns"), where the patterns are connected by through-holes (known as "vias"). (Ex. 1002, ¶218.) For example, FIG. 3A (below) is described having "a plurality of thin printed-circuit substrates 30-1 to 30-n having similar coil patterns 32-1 to 32-n." (Ex. 1032, 5:62-6:1, FIGS. 3D-3E (below), 6:13-35.) Starting and terminating ends of the coil patterns are connected using through-holes 33 and 34, respectively. (*Id.*, 6:4-21.) Layers of loop patterns (*e.g.*, 37-1 to 37-n (FIG. 5A (below))) may also "have the respective through-holes [39] connected in such a way that a spiral coil is formed in the direction in which the printed-circuit substrates 30-1 to 30-n are stacked." (*Id.*, 7:17-35.) (Ex. 1002, ¶¶98-100, 218.)

FIG. 3A

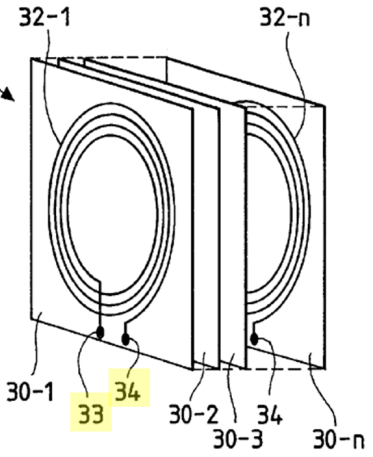

FIG. 5A

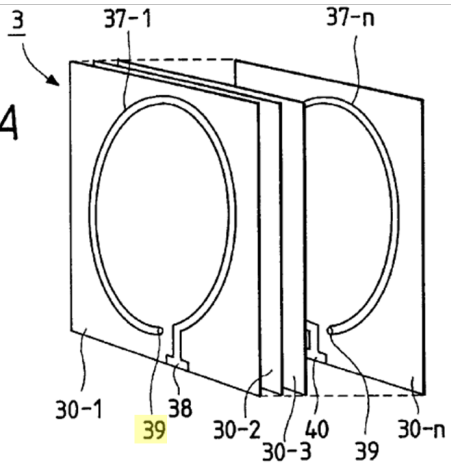

FIG. 3D

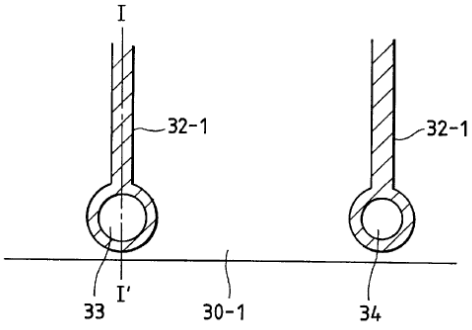

FIG. 3E

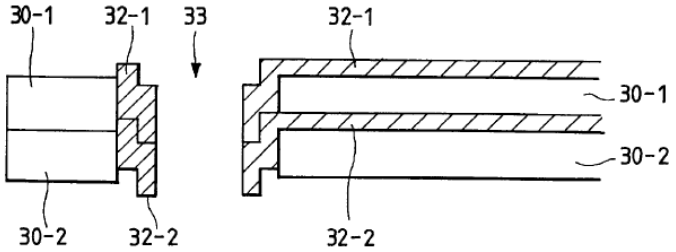

In view of *Shima* and *Odendaal*, a POSITA would have been motivated and found obvious to configure/implement the receiver coil in the modified *Okada* system (§IX.A.1) as a flexible PCB with layers of substantially spiral-shaped conductor coil patterns electrically connected with vias in to maintain continuity while providing a compact coil configuration with enhanced efficiency and reduced conductor resistance as suggested by *Shima*. (Ex. 1002, ¶219; Ex. 1032, 6:47-53, 7:41-44, 8:28-33.) A POSITA would have appreciated the versatility in applications taught by *Okada* (§IX.A.1(a)) and known stacked PCB coil designs and ways to interconnect them (vias) (*Shima/Odendaal*), and thus been motivated to design/implement various system designs that were consistent with such applications, including thin form factor configurations consistent with mobile devices (PDAs). Moreover, implementing a coil with layers having substantially similar conductor coil patterns would have reduced the complexity of designing and manufacturing comparing one having different patterns. (*Supra*; Ex. 1002, ¶219.)

A POSITA would have had the skill and rationale in implementing, and reasonable expectation of success in achieving, such a modification, especially since it was known to use vias to connect multi-layered flexible PCBs. (Ex. 1002, ¶220; Ex. 1045, ¶0026, FIGS. 3A-C; Ex. 1032 (*supra*).) Thus, such modification would have involved applying known technologies/techniques to yield the predictable result of providing a charger with multi-layer flexible PCB primary coils that would have performed power/signal communications consistent with that discussed above for the modified *Okada* system. (§IX.A.1.) *KSR* at 416-18.

C. Ground 3: Claim 23 is obvious over *Okada, Odendaal, Cho, Tetlow, Nguyen, Berghegger*, *Calhoon*, and *Labrou*

1. Claim 23

a) The portable device of claim 21, further comprising a magnetic core of ferromagnetic material within a central area of the coil and a near field communication (NFC) antenna and circuitry for communication of data with other devices.

The *Okada-Odendaal-Cho-Tetlow-Nguyen-Berghegger-Calhoon* combination in view of *Labrou* discloses/suggests this limitation. (Ex. 1002, ¶¶221-228; §IX.A.1.)

Consistent with the combined teachings above (*e.g.*, §IX.A.1(c)), *Cho* describes secondary coil 50-3 ("**receiver coil**") (red below) is formed on two ferrite sheets 49-11/49-12 (yellow) having a **central protrusion part** 49-13 **("magnetic core")** and an outer protrusion part 49-14. (Ex. 1061, 22:4-23:3; §IX.A.1(c).)

FIG. 11

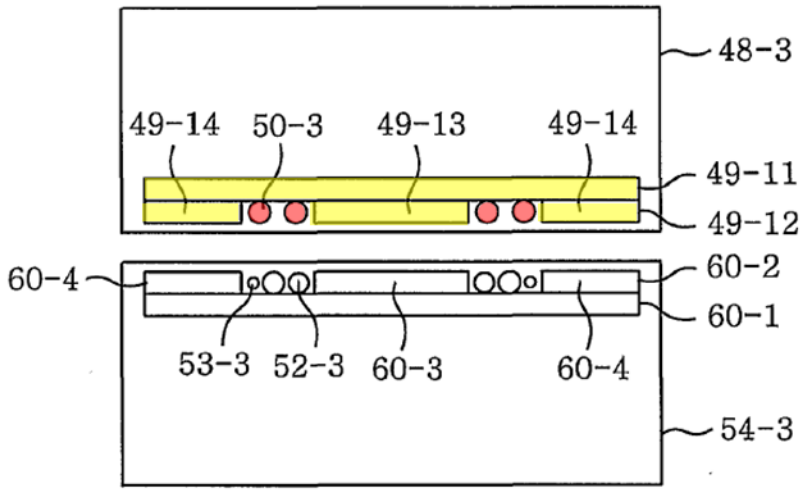

In light of such teachings/suggestions (*Odendaal-Cho* in context of a POSITA's state-of-art knowledge (§§IX.A.1(b)-(c))), it would have been obvious to configure the receiver coil 41 in the modified *Okada* system/device (§IX.A.1(c)) to have a central ferrite protrusion part/core ("**a magnetic core of ferromagnetic material within a central area of the receiver coil**") for reasons discussed for limitation 21(c), including, *e.g.*, improving the charging efficiency, as was known in the art. (Ex. 1002, ¶222; Ex. 1061, 18:20-24 ("by tailoring a thickness of a desired ferrite and a thickness and a width of a wire, a charging device having a high charging efficiency can be obtained without increasing a volume and a weight of a portable device."); §IX.A.1(c).)

A POSITA would have had the skill, knowledge, and rationale in implementing, and expectation of success in achieving, the above-modification, especially given the use/benefits of a ferrite core/material in secondary coils was known. (Ex. 1002, ¶223; Ex. 1059, ¶0012 (secondary coil having a ferrite core); Ex. 1061, 17:10-23:13 (ferrite material/core for inductive coils).) As such, a POSITA had the motivation and skills in configuring, and a reasonable expectation of success in achieving, the above-modification, especially in light of the teachings from *Cho*, *Odendaal,* in context of a POSITA's state-art-knowledge concerning the use of ferrite material to enhance inductive energy transfer efficiency. (§§IX.A.1(b)-IX.A.1(c); Ex. 1002, ¶223.) *KSR* at 416-18.

Moreover, while the above-modified *Okada* device/system does not disclose the "portable device" using NFC technologies/techniques to communicate data as claimed, a POSITA would have found it obvious to implement such features in view of *Labrou*. (Ex. 1002, ¶224.)

Labrou, like *Okada* (and other asserted art), is in the same technical field as the '942 patent, and discloses features reasonable pertinent to particular problem(s) the '942 patent inventor and a POSITA was trying to solve. (§IX.A.1; Ex. 1001, Abstract, 1:60-7:50, 42:22-34, 44:21-25; Ex. 1062, ¶0009, ¶0185; Ex. 1002, ¶225.) Therefore, a POSITA had reasons to consider/consult *Labrou* when looking to design/implement the above-modified *Okada* device/system. (Ex. 1002, ¶225.)

Labrou discloses use of an NFC chip coupled to a mobile device 104 and being a "part of the circuitry thereof," allowing software of mobile device 104 to "communicate with the…NFC chip." (Ex. 1062, ¶0185, FIG. 1.) *Labrou* explains that mobile device 104 may be used for "physical POS [point of sale] transactions," providing a message for "authenticat[ing] and approv[ing] the transaction" via an NFC signal. (*Id.*, ¶¶0022-0026, 0185.) If the NFC chip is "integrated with the circuitry of [the mobile device]," the device may send a confirmation message to the POS upon the consumer entering a PIN on the mobile device. (*Id.*, ¶0185.) A POSITA would have understood that the disclosed NFC chip necessarily includes "**antenna and circuitry for communication of data with other devices**" given it communicates with an RFID reader at the POS. (*Id.*, ¶0185; Ex. 1002, ¶226.) Without such an antenna, such wireless (radio frequency) communications would not occur as disclosed. (Ex. 1002, ¶226.)

A POSITA would have been motivated and found obvious to implement known NFC technologies/functionalities (NFC antenna/circuitry), similar to that taught by *Labrou* and known in the art, in *e.g.*, PDA3 ("**portable device**") to provide additional functionalities/techniques for PDA3 to communicate data consistent with that known in the art, and consistent with features taught by *Okada* and *Labrou* (*e.g.*, use of mobile device at a POS for authentication/approval). (Ex. 1002, ¶227.) Such an implementation/modification would have allowed the portable device to

perform/provide common communication techniques/technologies (known to be used with mobile devices at the time, as demonstrated by *Labrou*). (*Id.*)

A POSITA would have had the skill and rationale in implementing, and reasonable expectation of success in achieving, such modification. (Ex. 1002, ¶228.) Especially given it was known to employ NFC chip(s)/antenna/circuitry with mobile devices circuitry to provide the benefits of such near-field communications (e.g., POS transactions, etc.) (*Id.*). Thus, such modification would have involved applying known technologies/techniques (*e.g.,* known use of NFC antenna/circuitry) to yield the predictable result of providing a mobile device that is capable of providing conventional features, such as NFC-based POS transactions, consistent with that discussed by *Labrou* and known in the art. (Ex. 1002, ¶228.) *KSR* at 416-18.

D. Ground 4: Claim 25 is obvious over *Okada, Odendaal, Cho, Tetlow, Nguyen, Berghegger*, *Calhoon*, and *Meadows*

1. Claim 25

a) The portable device of claim 21, further comprising an output disconnect switch configured to connect and disconnect an output power from the receiver circuit to the battery, wherein the communication and control unit is further configured to control the output disconnect switch to disconnect the battery from the output power from the receiver circuit during at least some of the communication with the inductive charging system.

Okada-Odendaal-Cho-Tetlow-Nguyen-Berghegger-Calhoon in view of *Meadows* discloses/suggests this limitation. (Ex. 1002, ¶¶229-236.)

While the above-modified *Okada* combination does not expressly disclose "**an output disconnect switch**" as configured and controlled by "**the communication and control unit**" as recited in claim 25, a POSITA would have found it obvious to implement such features in view of *Meadows*. (Ex. 1002, ¶230.)

Meadows, like *Okada* (and other asserted art), is in the same technical field as the '942 patent and discloses features reasonable pertinent to particular problem(s) the '942 patent inventor and a POSITA was trying to solve. (§§IX.A.1; Ex. 1001, Abstract, 1:60-5:17, 38:3-6; Ex. 1060, FIG. 7A, Abstract, ¶¶0085-0097; Ex. 1002, ¶231.) Therefore, a POSITA had reasons to consider/consult *Meadows* when looking to design/implement the modified *Okada* system/device discussed above. (§IX.A.1; Ex. 1002, ¶231.)

Meadows discloses a battery protection IC 686 controlling a FET switch 688 ("**disconnect switch**") to ensure that battery 180 is not overcharged. (Ex. 1060, ¶¶0086-0087, FIG. 7A (annotated below).) (Ex. 1002, ¶232.)

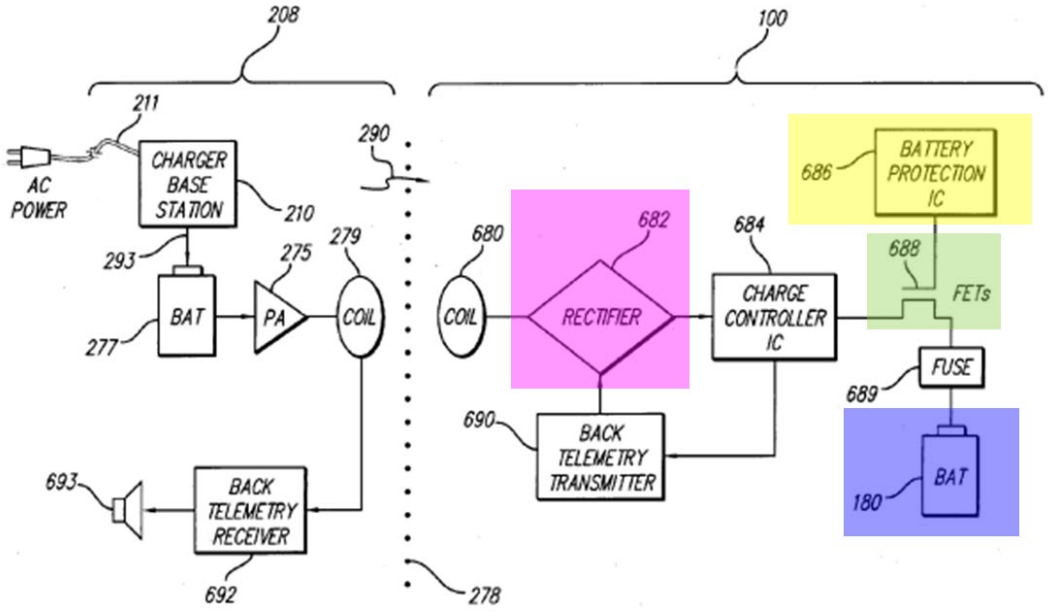

FIG. 7A

Rectifier 682 converts an AC signal from coil 680 to a DC signal for charging battery 180. (*Id.*, ¶0086.) "IC 686, with its FET switch 688…**keeps the battery within safe operating limits**." (*Id.*, ¶0087.) If abnormality occurs when charging the battery (*e.g.*, overvoltage/undervoltage/short-circuit), "IC 686 **opens**…switches 688 to **prevent further charging**." (*Id.*, ¶¶0087-0089; *id.*, ¶0022.) Thus, FET switch 688 is "**an output disconnect switch**" that is "**configured to connect and disconnect an output power from** [a] **receiver circuit to** [a] **battery**," where IC 686 is "**configured to control the output disconnect switch to disconnect the battery from the output power from**" a rectifier 682 (art of receiver circuitry). (Ex. 1002, ¶¶111-113, 232.)

A POSITA would have been motivated and found obvious to configure the "**communication and control circuit**" (§IX.A.1(f)) (or the "**the communication and control *unit***" (claim 25)) in the above-modified *Okada* system/device (§IX.A.1) to control a switch-based battery protection mechanism (*e.g.*, features similar to how FET switch 688 is controlled by battery protection IC 686 as taught by *Meadows*) to prevent further supply of power from the "**rectifier circuit**" (of the "**receiver circuit**") to the PDA3 battery if abnormality occurs, *e.g.*, overvoltage/undervoltage/short-circuit (*e.g.*, by disconnecting the battery from the output power from the receiver circuit) during the charging process (which includes when "**the communication**" of information with cradle 4 occurs) (§IX.A.1(j)-(l) ("**the communication**" occurring "**during**" the charging process). (Ex. 1002, ¶233.)

A POSITA would have understood charging abnormality would be detrimental to the battery, and cause potential safety issues. (Ex. 1060, ¶¶0013, 0016, 0097 (overcharging may cause breakdown, gas leakage and thus, cell voltage monitoring is "paramount" and "battery protection circuitry [] necessary to keep the cell in a safe operating region"); Ex. 1002, ¶234.) A POSITA would have known that it was advantageous to address overcharging issues with respect to portable devices/batteries and configure/consider multiple ways to avoid overcharging (in case one fails). (*Id.*; Ex. 1002, ¶234.) Thus, while *Okada* relies on feedback

information at the charging system to control/monitor full charge state (Ex. 1005, ¶¶0057, 0076, FIGS. 2-3), a POSITA would have found it beneficial to avoid overcharging in case such components/process fail to stop charging (due to disruptions, component/signal failure/issues, etc.) (Ex. 1002, ¶234.)

In light of the teachings/suggestions of *Meadows* and *Okada*, in context of a POSITA's state-of-art knowledge, and for reasons explained above, it would have been obvious to configure the modified *Okada* device with "**an output disconnect switch**" controlled by the "**communication and control unit**" (§IX.A.1(f)) to disconnect power from the receiver circuit to the battery **during** the charging process, which includes when "the communication(s)" occur with the charger system. (§IX.A.1(f)-IX.A.1(l); Ex. 1002, ¶235.)

A POSITA would have had the skill and rationale in implementing, and reasonable expectation of success in achieving, such modification. (Ex. 1002, ¶236.) Especially where it would have involved applying known technologies/techniques (*e.g.,* known switch-based mechanisms (such as battery protection mechanisms)) to yield the predictable result of providing portable device that minimizes/avoids voltage/power delivery to the device battery at appropriate times, consistent with that discussed above (*Meadows*, state-of-art knowledge). (Ex. 1002, ¶236.) *KSR* at 416-18.

E. Ground 5: Claim 26 is obvious over *Okada, Odendaal, Cho, Tetlow, Nguyen, Berghegger*, *Calhoon*, and *Takagi*

1. Claim 26

a) The portable device of claim 21, wherein:

b) the portable device further comprises a FET driver and a FET switch coupled to the coil and is configured to operate in an inductive power receiving mode and in an inductive power transfer mode,

c) in the inductive power receiving mode, the portable device is configured to receive power inductively via the coil to charge the battery of the portable device, and

d) in the inductive power transfer mode, the portable device is configured to operate the FET driver to drive the FET switch to apply an alternating current to the coil for providing power inductively to a second portable device.

Okada-Odendaal-Cho-Tetlow-Nguyen-Berghegger-Calhoon in view of *Takagi* discloses/suggests this limitation. (Ex. 1002, ¶¶237-245.)

While the modified *Okada* combination does not expressly disclose the "portable device" includes FET switch/driver and operates in inductive power receiving/transfer modes as claimed, a POSITA would have found it obvious to implement such features in view of *Takagi*. (Ex. 1002, ¶238.)

Takagi, like *Okada-Odendaal-Kook*, discloses inductive power/signal transfer configurations using coils. (Ex. 1033, Abstract, FIGS. 1-7, ¶¶0003, 0013-0030, 0041-0078), and thus is in the same technical field as the '942 patent. (§IX.A.1; Ex.

1001, 1:50-7:50.) *Takagi* discloses features reasonable pertinent to particular problem(s) the '942 patent inventor and POSITA was trying to solve. (*Id.*; Ex. 1033, ¶¶0005-0015; Ex. 1001, Abstract, 1:50-7:50; Ex. 1002, ¶239.) Therefore, a POSITA had reasons to consider/consult *Takagi* when looking to design/implement the modified *Okada* device/system. (Ex. 1002, ¶239.)

Takagi discloses configuring inductive power transfer-based devices to operate as both an inductive power receiver and inductive power transmitters ("**operate in an inductive power receiving mode and in an inductive power transfer mode**"). (Ex. 1033, Abstract, ¶¶0003-0030, 0041-0056.) Power transmitting/receiving device 12 includes coil 125, power **transmitting** circuit 121, power **receiving** circuit 122, and secondary battery 123. (Ex. 1033, FIG. 2 (annotated below), ¶0047; Ex. 1002, ¶¶101-103, 240.) Such features are applicable to portable systems, e.g., portable/mobile computers/phones. (Ex. 1033, ¶¶0026, 0030, 0043, 0058, 0065, 0070.) (Ex. 1002, ¶240.)

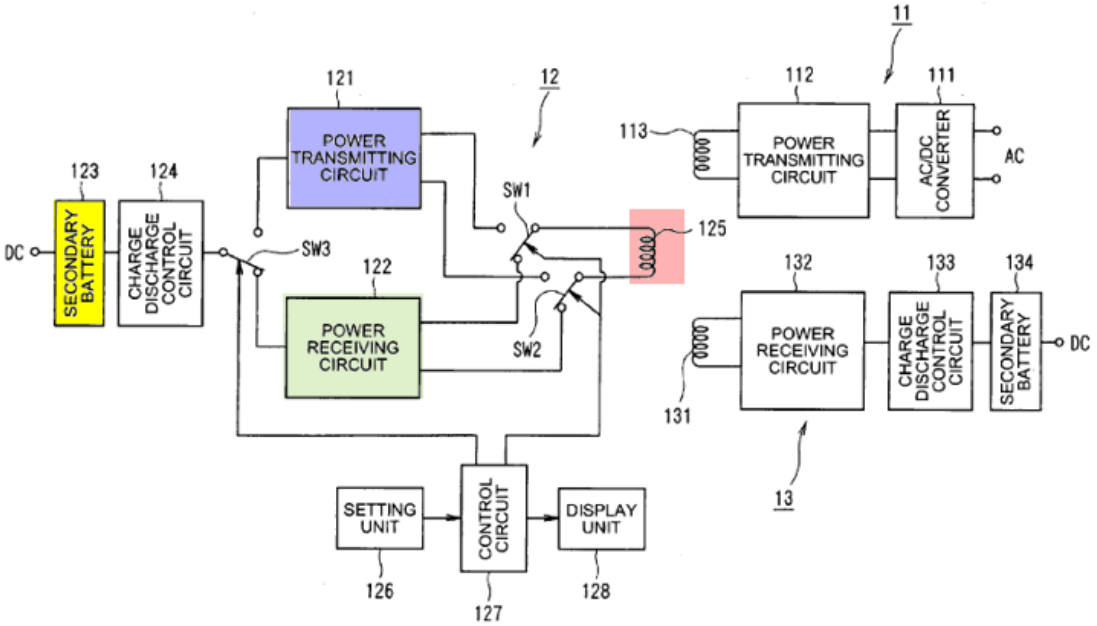

FIG. 2

Transmitting circuit 121 produces an alternating voltage from battery 123, and supplies it to coil 125 for **charging device 13** via coil 131. (*Id.*, ¶¶0048, 0054-0056.) Alternatively, based on switch SW1/SW2 settings, power receiving circuity 122 (with control circuit 127 (¶0060)) in device 12 may also **receive power from device 11** via coils 125 and 113 for recharging battery 123. (*Id.*, ¶¶0048-0053, 0057-0072.) Thus, when coil 113 approaches coil 125 (and based on switch SW1-SW2 settings), power receiving circuit 122 receives power from device 11 (via the magnetic coupling between coils 125 and 113) to charge battery 123. (*Id.*, ¶0048, 0052-0053, 0069-0072; *id.*, 0057-0068.) (Ex. 1002, ¶241.) Thus, device 12 includes switches (e.g., SW1-SW2) and associated driver circuitry (e.g., circuitry in transmitting/receiver/control circuits 121-122, 127) to operate in power

transmitting/receiving modes to either "receive power inductively via a coil to charge [an internal] battery" or "apply an alternating current to the coil for providing power inductively to a second portable device" [device 13]. (*Supra*; Ex. 1002, ¶241.)

In light of *Takagi*, a POSITA would have been motivated, and found obvious, to configure the portable device in the modified *Okada* combination to provide power transmitting/receiving modes to, via coil 41, inductively provide power to another portable device and inductively receive power to charge the secondary battery therein, similar to features/configurations taught by *Takagi*, and like that recited in claim 26. (*Supra* above; §IX.A.1; Ex. 1002, ¶242.) A POSITA would have appreciated the benefits of such configurations and thus been motivated to enhance the versatility of applications of the modified *Okada* power/charging system, including enhancing/complimenting the mobility aspects of the portable device(s) contemplated by *Okada.* (Ex. 1002, ¶242.) Indeed, a POSITA would have appreciated such a modification would have allowed the portable device to power/charge other devices (while also being capable of its battery to be recharged), thus expanding the device's functionalities, as taught/suggested by *Takagi*. (*Id.*)

A POSITA would have likewise found it obvious to configure the above modification with FET driver circuits and FET switch(es) in light of the teachings/suggestions of *Takagi* in context of the modified *Okada* combination and

a POSITA's state-of-art knowledge (confirming known use of FET switch/driver-circuits in inductive power transfer devices/systems). (Ex. 1002, ¶243.) As explained, *Takagi* discloses using switches and associated drive circuitry to facilitate the above-noted inductive power transmitting/receiving operations. (*Supra*; *e.g.,* Ex. 1033, FIG. 2, ¶¶0057, 0060, 0066, 0077, 0082-0085, 0092-0093.)

Such teachings in context of those by *Okada*, *Berghegger*, Cho, *Calhoon* would have motivated a POSITA to configure the portable device to implement the above power transmitting/receiving features (similar to that taught/suggested by *Takagi* and as-claimed) using FET switch(es) and associated FET driver circuit(s). (Ex. 1002, ¶243; Ex. 1005, ¶¶0044, 0049, 0054 (FET switches/control circuits in inductive power transfer device), Ex. 1006, 3:51-4:24 (MOSFET switches in inductive power transfer device) Ex. 1061, 7:3-29, 9:17-29, 11:20-35, 12:20-30 (known use of FET switches in inductive power transfer circuits); Ex. 1041, FIG. 3 (protective power FET in portable device).) Such a modification would have been a predictable application of known technologies/techniques (use of FET switches/driver(s)) to improve *Okada*'s portable device applications/functionalities in a manner consistent with that taught/suggested by *Takagi* and *Okada* (as modified). (Ex. 1002, ¶243.)

Thus, consistent with the prior art's teachings/guidance, such modification would have predictably resulted in the portable device in the modified *Okada* system

(§IX.A.1(a)-(l)) to include FET driver circuitry and associated FET switches that enable the device to operate in a power receiving mode where the device receives power inductively via coil 19 to charge the device's battery and also in a power transmitting mode (which operates the FET driver to drive the FET switch(es)) to apply an alternating current to coil 19 (consistent with known inductive power transfer (§§IX.A.1(a)-(b); Ex. 1041, ¶¶0022)), for providing power inductively to a second portable device (e.g., like a laptop/PDA, etc.). (Ex. 1002, ¶244.)

A POSITA would have had the skill and rationale in implementing, and reasonable expectation of success in achieving, such modification, especially since given the guidance by *Takagi* and other prior art (noted above). (*See supra*; Takagi; Ex. 1002, ¶245; *see also* Ex. 1043, 4:34-55, FIG. 3, 5:23-25.) Applying such known technologies/techniques (multi-function portable power transfer device using known inductive power components (FET switches/driver(s))) would have foreseeably led to the modified *Okada* portable device being configured to have dual-mode functionalities (providing power to other devices while also allowing its battery to be wirelessly charged via coil 41), consistent with that discussed above by *Takagi* and the *Okada* combination. (Ex. 1002, ¶245; §IX.A.1). *KSR* at 416-18.

X. DISCRETIONARY DENIAL IS NOT APPROPRIATE

Discretionary denial under Section 325(d) is not appropriate here given the prior art combinations/arguments raised during prosecution are not the same/substantially similar to the presented grounds. For instance, the Office did not consider *Okada* in light of the other asserted prior art herein. (Ex. 1004; Ex. 1001, Cover.) *Okada* discloses/suggests many of the claimed features, and thus is relevant to the patentability of the challenged claim(s), especially when considered in context of the asserted obviousness positions. (§IX.) The examiner also did not have the benefit of expert testimony to support such teachings/suggestions as presented here. (Ex. 1002.) Thus, the examiner erred in allowing the claims without considering the teachings/suggestions in the prior art relied on in this Petition (*see* §IX). (Ex. 1004, 562-573.) Had the examiner done so, the challenged claims would have likely not have issued.[7]

This is true despite the issued patent from *Calhoon* (Ex. 1041) (and other patent references by "Calhoon") and a published application with *Okada* as a co-inventor (Ex. 1019) having some overlapping subject matter were cited during prosecution. (Ex. 1001, Cover; Ex. 1004.) As with other submitted references, the

[7] Petitioner reserves the right to seek leave to respond to any §325(d) (and §314) arguments PO may raise to avoid institution.

examiner erred in a manner pertinent to the patentability of the challenged claims by failing to consider and apply the similar teachings by each of *Okada* and *Calhoon* alone or in combination with other prior art. As mentioned, *Okada* discloses many claimed features and *Calhoon* at least discloses features recited in limitation 22, and thus should have been considered in combination with other pertinent references (like *Okada* and others). (§IX.A.) The examiner erred by not substantively considering and applying such collective teachings to demonstrate obviousness of the challenged claims. (*Id.*)

Furthermore, an evaluation of the factors under *Apple Inc. v. Fintiv, Inc.*, IPR2020-00019, Paper 11 (Mar. 20, 2020) (precedential), favors institution.

The **first factor** (stay) is neutral, because Samsung has not yet moved for a stay. *See Hulu LLC v. SITO Mobile R&D IP, LLC et al.*, IPR2021-00298, Paper 11 at 10-11 (P.T.A.B. May 19, 2021).

The **second factor** (proximity) is neutral. "The PTAB will weigh this factor against exercising discretion to deny institution under *Fintiv* if the median time-to-trial is around the same time or after the projected statutory deadline for the PTAB's final written decision" (FWD). (Ex. 1051, 9.) The median time from filing to trial in the Eastern District of Texas is 19 months, meaning trial will be *no earlier* than May 2024 (Ex. 1052, 35), is close to the court's scheduled jury selection for August

5, 2024 (Ex. 1053, 1.) With this petition filed in June 2023, a FWD may be expected by December 2024, not long after the trial date.

That the FWD may come after the trial date is not dispositive. The Board has granted institution in cases where the FWD issued months after the scheduled trial date. The Board has relied on various justifications, such as diligence in filing the petition, a stipulation not to pursue the asserted grounds in litigation, minimal investment in litigation, and the merits of the invalidity challenge were strong. *Verizon Business Network Services, Inc. v. Huawei Techs. Co*., IPR2020-01141, Paper 12 (Jan. 14, 2021). The same factors are present in this case. For instance, Petitioner diligently filed this petition (challenging long, convoluted claims) in advance of the one-year bar date and within four months of PO's infringement contentions in the Texas Litigation. (Exs. 1018, 1022.) Fact discovery is not anticipated to close until March 18, 2024. (Ex. 1053, 3.) Expert discovery has not yet started. (*Id.*) And the *Markman* hearing has been scheduled for February 6, 2024, after the filing of this petition. (*Id.*)

The **third factor** (investment) also weighs against denial. The district court case is in the early stages. Fact discovery is in its infancy and the parties have not engaged in expert discovery. (*Id.*) The parties have not yet identified terms for construction. (*Id.*, 3-6.) Nor have there been any substantive orders in this case.

The **fourth factor** (overlap) also weighs against denial. Petitioner hereby stipulates that, if the IPR is instituted, Petitioner will not pursue the IPR grounds in the district court litigation. Thus, "[i]nstituting trial here serves overall system efficiency and integrity goals by not duplicating efforts and by resolving materially different patentability issues." *Apple, Inc. v. SEVEN Networks, LLC*, IPR2020-00156, Paper 10 at 19 (P.T.A.B. June 15, 2020); *see also Sand Revolution II, LLC v. Continental Intermodal Group-Trucking LLC*, IPR2019-01393, Paper 24 at 12 (P.T.A.B. June 16, 2020).

While the **fifth factor** (parties) may weigh slightly in favor of denial, because the Petitioner and PO are the same parties as in district court, based on a "holistic view," the factors favor institution. *Samsung Elecs. Co. Ltd. v. Dynamics Inc.*, IPR2020-00505, Paper 11 at 15 (P.T.A.B. Aug. 12, 2020).

Further, the Board should not discretionarily deny institution, because this petition presents compelling merits. *See Commscope Tech. LLC v. Dali Wireless, Inc.*, IPR2022-01242, Paper 23 at 4-5 (P.T.A.B. Feb. 27, 2023) (precedential). As demonstrated above, the claimed features are a compilation of technologies/techniques known to be used in inductive power/charge systems. (§IX) Moreover, this Petition is the ***sole*** challenge to the challenged claims before the Board—a "crucial fact" favoring institution. *Google LLC v. Uniloc 2017 LLC*, IPR2020-00115, Paper 10 at 6 (May 12, 2020).

XI. CONCLUSION

Accordingly, Petitioner requests institution of IPR for the challenged claims based on the specified grounds.

Respectfully submitted,

Dated: June 30, 2023

By: /Joseph E. Palys/
Joseph E. Palys (Reg. No. 46,508)
Counsel for Petitioner

CERTIFICATE OF COMPLIANCE

Pursuant to 37 C.F.R. § 42.24(d), the undersigned certifies that the foregoing Petition for *Inter Partes* Review of U.S. Patent No. 11,462,942 contains, as measured by the word-processing system used to prepare this paper, 13,768 words. This word count does not include the items excluded by 37 C.F.R. § 42.24 as not counting towards the word limit.

Respectfully submitted,

Dated: June 30, 2023

By: /Joseph E. Palys/
Joseph E. Palys (Reg. No. 46,508)
Counsel for Petitioner

CERTIFICATE OF SERVICE

I hereby certify that on June 30, 2023, I caused a true and correct copy of the foregoing Petition for *Inter Partes* Review of U.S. Patent No. 11,462,942 and supporting exhibits to be served via express mail on the Patent Owner at the following correspondence address of record as listed on Patent Center:

115007 – NK Patent Law
4101 Lake Boone Trail
Suite 218
Raleigh, NC 27607

By: /Joseph E. Palys/
Joseph E. Palys (Reg. No. 46,508)