US008090550B2

(12) **United States Patent**
Azancot et al.

(10) **Patent No.: US 8,090,550 B2**
(45) **Date of Patent: Jan. 3, 2012**

(54) **EFFICIENCY MONITOR FOR INDUCTIVE POWER TRANSMISSION**

(75) Inventors: **Yossi Azancot**, Jerusalem (IL); **Amir Ben-Shalom**, Modiin (IL); **Oola Greenwald**, Mevasseret Zion (IL); **Arik Rofe**, Jerusalem (IL)

(73) Assignee: **Powermat, Ltd.** (IL)

(*) Notice: Subject to any disclaimer, the term of this patent is extended or adjusted under 35 U.S.C. 154(b) by 197 days.

(21) Appl. No.: **12/563,558**

(22) Filed: **Sep. 21, 2009**

(65) **Prior Publication Data**

US 2010/0070219 A1 Mar. 18, 2010

Related U.S. Application Data

(63) Continuation of application No. PCT/IL2008/000401, filed on Mar. 23, 2008.

(60) Provisional application No. 60/907,132, filed on Mar. 22, 2007, provisional application No. 60/935,847, filed on Sep. 4, 2007, provisional application No. 61/006,076, filed on Dec. 18, 2007, provisional application No. 61/006,106, filed on Dec. 19, 2007, provisional application No. 61/006,488, filed on Jan. 16, 2008, provisional application No. 61/006,721, filed on Jan. 29, 2008.

(51) **Int. Cl.**
G01R 21/00 (2006.01)

(52) **U.S. Cl.** **702/62**; 702/150; 323/224; 320/108; 235/380; 307/104; 307/116

(58) **Field of Classification Search** 702/62, 702/150; 324/239, 329, 334, 335, 336; 323/224, 323/225, 235, 238, 247, 259, 262; 363/16, 363/24, 25, 131; 320/108, 109, 114; 235/380; 307/104, 116; 318/16, 480, 538
See application file for complete search history.

(56) **References Cited**

U.S. PATENT DOCUMENTS

3,771,085	A	11/1973	Hojo et al.
3,938,018	A	2/1976	Dahl
4,160,193	A	7/1979	Richmond
4,431,948	A	2/1984	Elder et al.
4,754,180	A	6/1988	Kiedrowski
4,977,515	A	12/1990	Rudden et al.
5,221,877	A	6/1993	Falk

(Continued)

FOREIGN PATENT DOCUMENTS

EP 0160990 A2 11/1985

(Continued)

OTHER PUBLICATIONS

S.Y.R. Hui, et al., A New Generation of Universal Contactless Battery Charging Platform for Portable Consumer Electronic Equipment, IEEE Transactions on Power Electronics, vol. 20, No. 3, May 2005.

(Continued)

Primary Examiner — Carol Tsai
(74) *Attorney, Agent, or Firm* — Brooks Kushman P.C.

(57) **ABSTRACT**

An efficiency monitor for monitoring the efficiency of power transmission by an inductive power outlet. The efficiency monitor includes an input power monitor, for measuring the input power delivered to the primary coil, and an output power monitor, for measuring the output power received by the secondary coil. The input and output powers are used by a processor to determine an index of power-loss. A circuit breaker may be used to disconnect the inductive power outlet in case of excessive power loss.

11 Claims, 20 Drawing Sheets

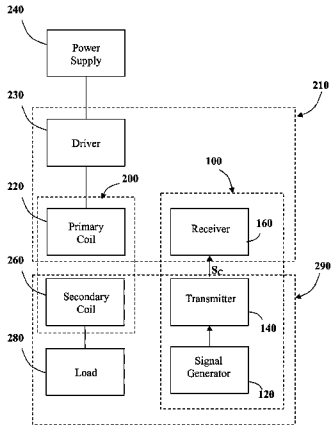

SAMSUNG EXHIBIT 1006

U.S. PATENT DOCUMENTS

5,278,771 A 1/1994 Nyenya
5,367,242 A 11/1994 Hulman
5,455,466 A 10/1995 Parks et al.
5,486,394 A 1/1996 Stough
5,528,113 A 6/1996 Boys et al.
5,550,452 A 8/1996 Shirai et al.
5,600,225 A 2/1997 Goto
5,713,939 A 2/1998 Nedungadi et al.
5,734,254 A 3/1998 Stephens
5,762,250 A 6/1998 Carlton et al.
5,821,728 A 10/1998 Schwind
5,821,731 A 10/1998 Kuki et al.
5,850,416 A * 12/1998 Myer 375/221
5,907,285 A 5/1999 Toms et al.
5,929,598 A 7/1999 Nakama et al.
5,949,214 A 9/1999 Broussard et al.
6,042,005 A 3/2000 Basile et al.
6,211,649 B1 4/2001 Matsuda
6,230,029 B1 5/2001 Hahn et al.
6,396,935 B1 5/2002 Makkonen
6,436,299 B1 8/2002 Baarman et al.
6,441,589 B1 8/2002 Frerking et al.
6,484,260 B1 11/2002 Scott et al.
6,532,298 B1 3/2003 Cambier et al.
6,586,909 B1 7/2003 Trepka
6,624,616 B1 9/2003 Frerking et al.
6,644,557 B1 11/2003 Jacobs
6,673,250 B2 1/2004 Kuennen et al.
6,690,169 B2 * 2/2004 Candy 324/329
6,721,540 B1 4/2004 Hayakawa
6,731,071 B2 5/2004 Baarman
6,766,040 B1 7/2004 Catalano et al.
6,825,620 B2 11/2004 Kuennen et al.
6,888,438 B2 5/2005 Hui et al.
6,894,457 B2 5/2005 Germagian et al.
D519,275 S 4/2006 Shertzer
7,043,060 B2 5/2006 Quintana
7,126,450 B2 10/2006 Baarman et al.
7,132,918 B2 11/2006 Baarman et al.
7,164,255 B2 1/2007 Hui
7,180,248 B2 2/2007 Kuennen et al.
7,180,265 B2 2/2007 Naskali et al.
7,224,086 B2 5/2007 Germagian et al.
7,233,319 B2 6/2007 Johnson et al.
D553,852 S 10/2007 Brandenburg
7,385,357 B2 6/2008 Kuennen et al.
7,392,068 B2 6/2008 Dayan et al.
7,405,535 B2 7/2008 Frerking et al.
7,462,951 B1 12/2008 Baarman
D586,809 S 2/2009 Jones et al.
7,518,267 B2 4/2009 Baarman
7,522,878 B2 4/2009 Baarman
7,576,514 B2 8/2009 Hui
D599,735 S 9/2009 Amidei et al.
D599,736 S 9/2009 Ferber et al.
D599,737 S 9/2009 Amidei et al.
D599,738 S 9/2009 Amidei et al.
7,605,496 B2 * 10/2009 Stevens et al. 307/17
D603,603 S 11/2009 Laine et al.
7,612,528 B2 11/2009 Baarman et al.
D607,879 S 1/2010 Ferber et al.
D611,407 S 3/2010 Webb
D611,408 S 3/2010 Ferber et al.
7,791,312 B2 * 9/2010 Kook 320/108
2002/0057584 A1 5/2002 Brockmann
2002/0158512 A1 10/2002 Mizutani et al.
2003/0210106 A1 11/2003 Cheng et al.
2004/0023633 A1 2/2004 Gordon
2004/0195767 A1 10/2004 Randall
2004/0203537 A1 10/2004 Yoshida et al.
2004/0242264 A1 12/2004 Cho
2004/0261802 A1 12/2004 Griffin et al.
2005/0007067 A1 1/2005 Baarman et al.
2005/0083020 A1 4/2005 Baarman
2005/0130593 A1 6/2005 Michalak
2005/0169506 A1 8/2005 Fenrich et al.
2005/0192062 A1 9/2005 Mickle et al.
2005/0233768 A1 10/2005 Guo et al.
2006/0028176 A1 2/2006 Tang et al.
2006/0043927 A1 3/2006 Beart et al.
2006/0052144 A1 3/2006 Seil et al.
2006/0061325 A1 3/2006 Tang et al.
2006/0071632 A1 4/2006 Ghabra et al.
2006/0091222 A1 5/2006 Leung et al.
2006/0093132 A1 5/2006 Desormiere et al.
2006/0202665 A1 9/2006 Hsu
2007/0023559 A1 2/2007 Scapillato et al.
2007/0057763 A1 3/2007 Blattner et al.
2007/0076459 A1 4/2007 Limpkin
2007/0136593 A1 6/2007 Plavcan et al.
2007/0165371 A1 7/2007 Brandenburg
2007/0182367 A1 8/2007 Partovi
2007/0279002 A1 12/2007 Partovi
2008/0001922 A1 1/2008 Johnson et al.
2008/0030985 A1 2/2008 Jeon et al.
2008/0049988 A1 2/2008 Basile et al.
2008/0079388 A1 4/2008 Sarnowsky et al.
2008/0132293 A1 6/2008 Gundlach et al.
2008/0157715 A1 7/2008 Rosenboom et al.
2008/0223926 A1 9/2008 Miller et al.
2008/0258680 A1 10/2008 Frerking et al.
2008/0265835 A1 10/2008 Reed et al.
2009/0026959 A1 1/2009 Lin et al.
2009/0040807 A1 2/2009 Doumae et al.
2009/0047768 A1 2/2009 Jain
2009/0047769 A1 2/2009 Bhat et al.
2009/0075704 A1 3/2009 Wang
2009/0079387 A1 3/2009 Jin et al.
2009/0084705 A1 4/2009 Justiss
2009/0097221 A1 4/2009 Sayed et al.
2009/0102416 A1 4/2009 Burley
2009/0134972 A1 5/2009 Wu, Jr. et al.
2009/0146608 A1 6/2009 Lee
2009/0153098 A1 6/2009 Toya et al.
2009/0153297 A1 6/2009 Gardner
2009/0174263 A1 7/2009 Baarman et al.
2009/0203355 A1 8/2009 Clark
2009/0212639 A1 8/2009 Johnson
2009/0226050 A1 9/2009 Hughes
2009/0243791 A1 10/2009 Partin et al.
2009/0251102 A1 10/2009 Hui
2009/0273891 A1 11/2009 Peiker
2009/0278494 A1 11/2009 Randall
2009/0322158 A1 * 12/2009 Stevens et al. 307/104
2010/0039066 A1 2/2010 Yuan et al.

FOREIGN PATENT DOCUMENTS

EP 0160990 B1 1/1991
EP 0558316 A1 1/1993
EP 1990734 A1 11/2008
GB 2399466 A 9/2004
GB 2399466 B 11/2005
WO 9602879 A1 2/1996
WO 0215320 A1 2/2002
WO 0201557 A1 3/2002
WO 2008030985 A2 3/2003
WO 2006015143 A2 2/2006
WO 2008086080 A2 7/2008
WO 2008093334 A2 7/2008
WO 2008114268 A2 9/2008
WO 2009040807 A2 4/2009
WO 2009047768 A2 4/2009
WO 2009047769 A2 4/2009
WO 2009049657 A1 4/2009
WO 2009108958 A1 9/2009
WO 2010/025156 A1 3/2010
WO 2010/025157 A1 3/2010

OTHER PUBLICATIONS

X Liu, et al., An Analysis of a Double-layer Electromagnetic Shield for a Universal Contactless Battery Charging Platform, IEEE 2006.
X Liu, Equivalent Circuit Modeling of a Multilayer Planar Winding Array Structure for Use in a Universal Contactless Battery Charging Platform, 2006 IEEE.
S.C. Tang, et al., Evaluation of the Shielding Effects on Printed-Circuit-Board Transformers Using Ferrite Plates and Copper Sheets, 2002 IEEE.

Y.P. Xu, et al., Extended Theory on the Inductance Calculation of Planar Spiral Windings Including the Effect of Double-layer Electromagnetic Shield, 2007 IEEE .
Xun Liu, et al., Optimal Design of a Hybrid Winding Structure for Planar Contactless Battery Charging Platform, 2007 IEEE.
Xun Liu, et al., Simulation Study and Experimental Verification of a Universal Contactless Battery Charging Platform With Localized Charging Features, 2007 IEEE.
International Search Report and Written Opinion as filed in PCT/IL2008/001282, as mailed on Mar. 3, 2009.
International Search Report and Written Opinion as filed in PCT/IL2008001347, as mailed on Feb. 17, 2009.
International Search Report and Written Opinion as filed in PCT/IL2008/001348, as mailed on Oct. 12, 2008.

* cited by examiner

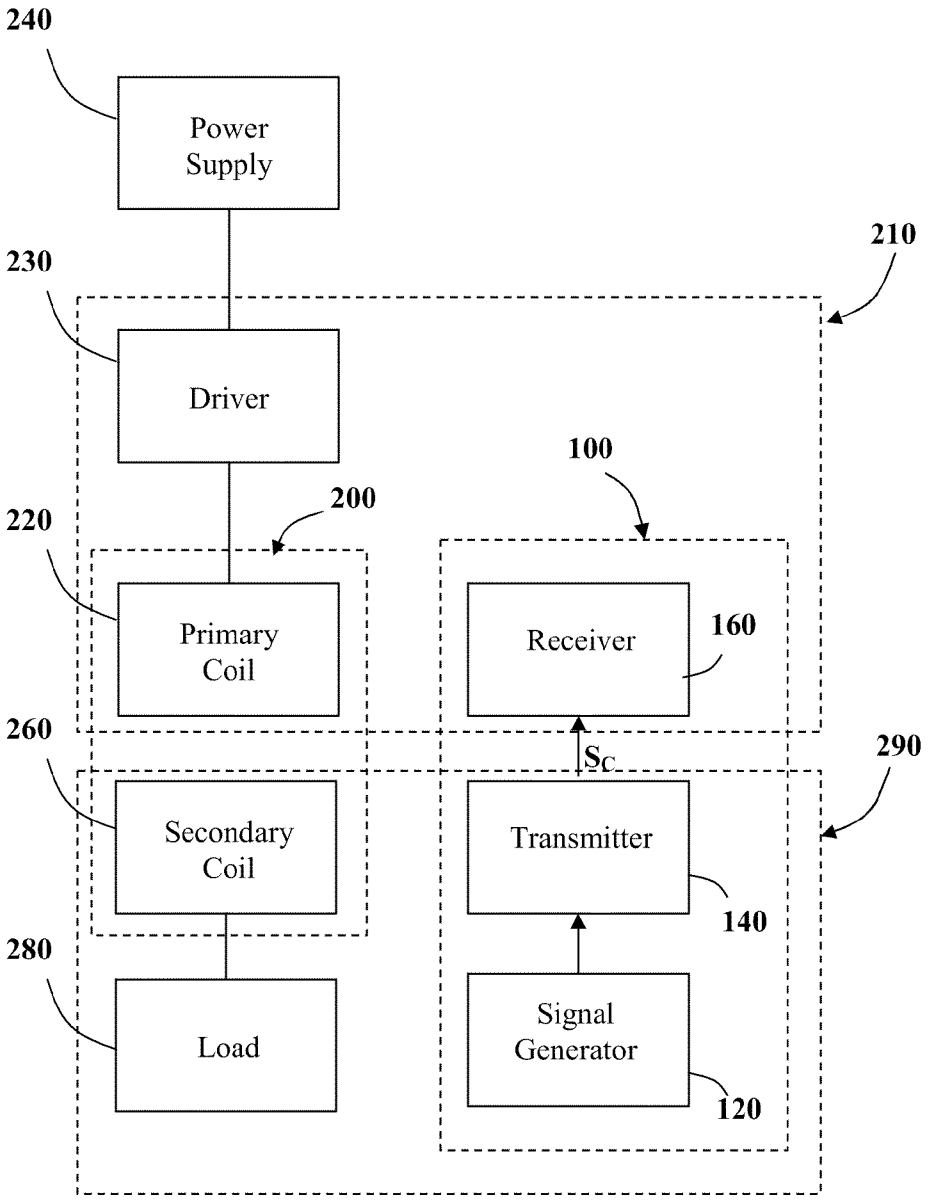
240
Power Supply
210
230
Driver
100
200
220
Primary Coil
Receiver
160
260
S_C
290
Secondary Coil
Transmitter
140
280
Load
Signal Generator
120

Fig. 1

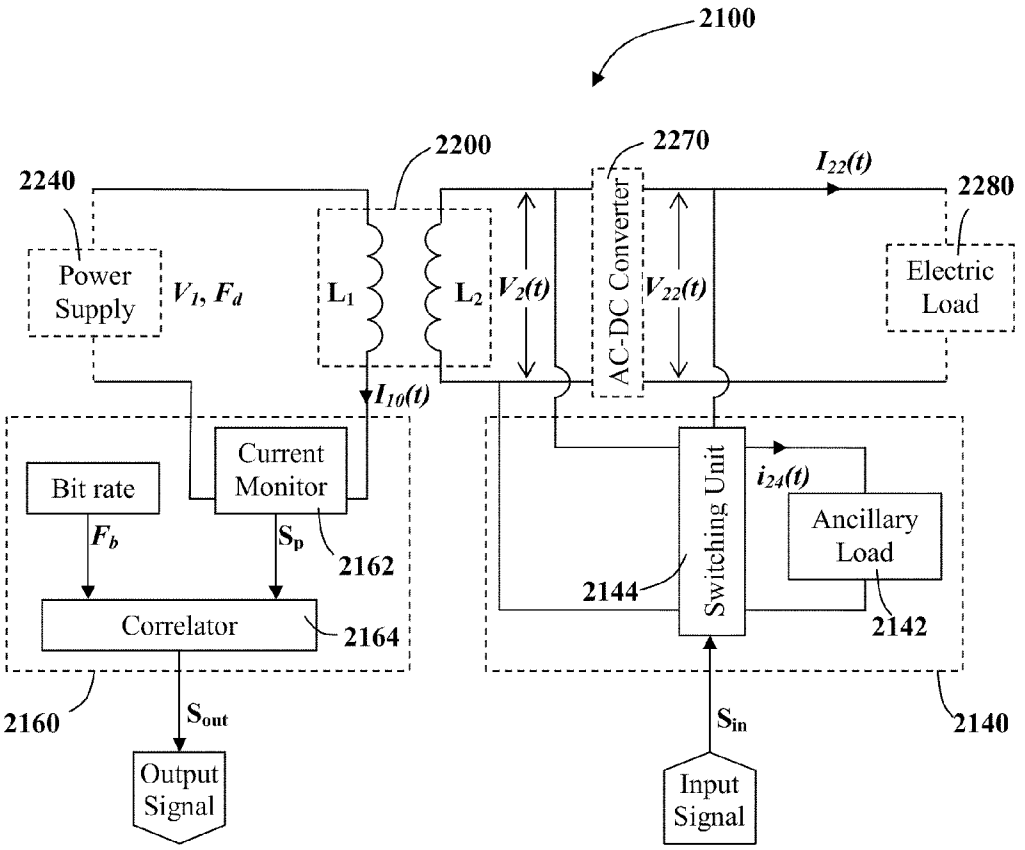
2100
2200
2270
2240
2280
$I_{22}(t)$
Power Supply
V_1, F_d
L_1
L_2
$V_2(t)$
AC-DC Converter
$V_{22}(t)$
Electric Load
$I_{10}(t)$
Current Monitor
Bit rate
F_b
S_p
2162
Correlator
2164
2160
S_{out}
Output Signal
Switching Unit
$i_{24}(t)$
Ancillary Load
2144
2142
2140
S_{in}
Input Signal

Fig. 2a

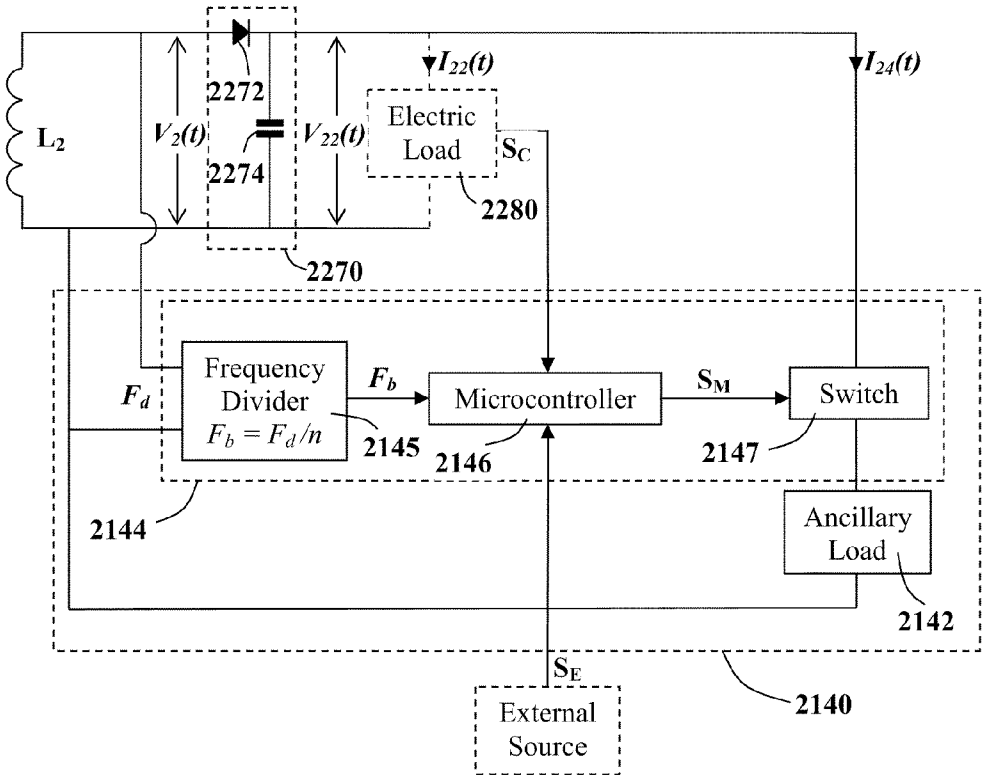
L2
V2(t)
2272
2274
V22(t)
I22(t)
Electric Load
SC
2280
I24(t)
2270
Frequency Divider
Fb = Fd/n
Fd
Fb
2145
Microcontroller
2146
SM
Switch
2147
2144
Ancillary Load
2142
SE
External Source
2140

Fig. 2b

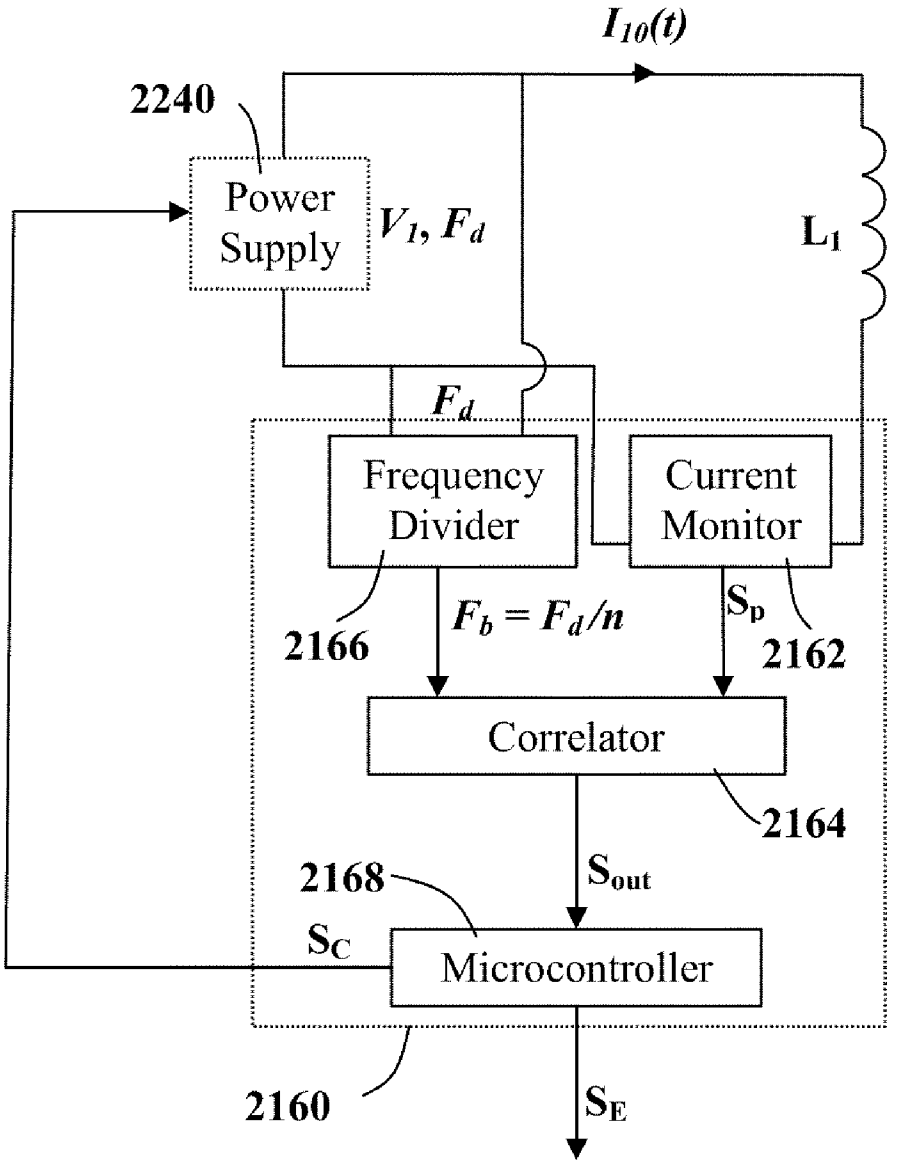
$I_{10}(t)$
2240
Power Supply
V_1, F_d
L_1
F_d
Frequency Divider
Current Monitor
2166
$F_b = F_d/n$
S_p
2162
Correlator
2164
2168
S_{out}
S_C
Microcontroller
2160
S_E

Fig. 2c

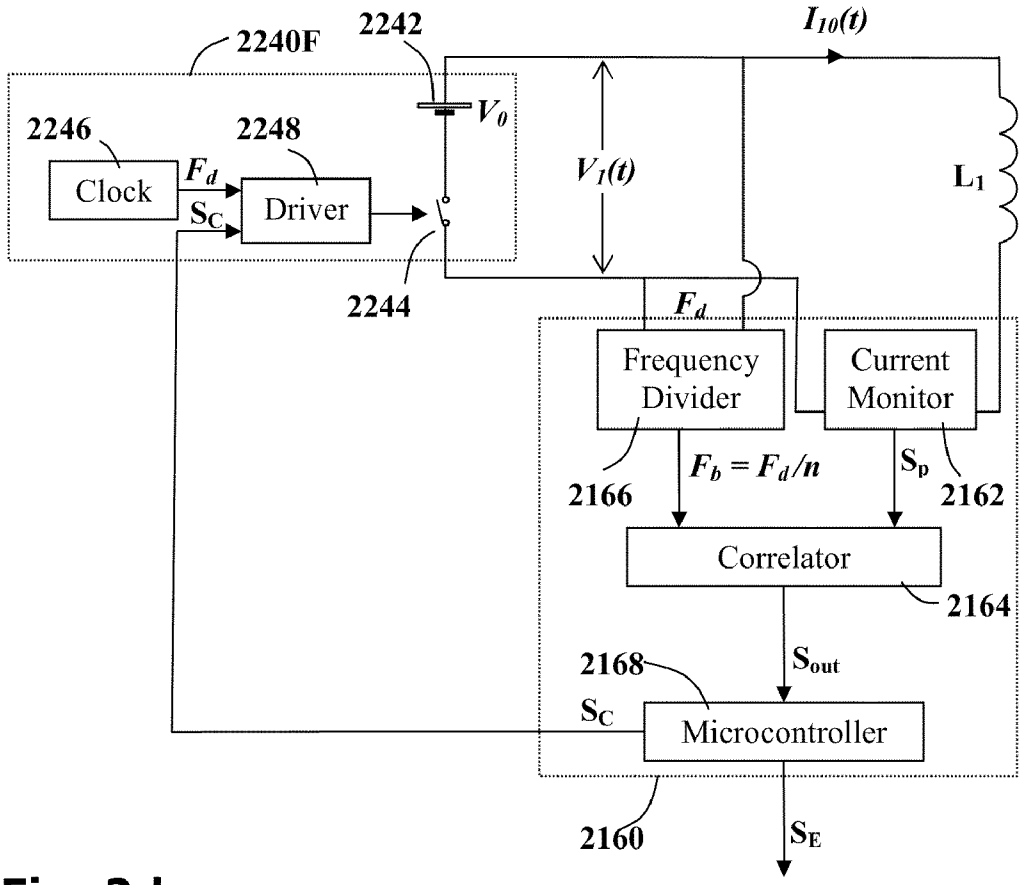
2240F
2242
$I_{10}(t)$
V_0
2246
2248
Clock
F_d
S_C
Driver
$V_1(t)$
L_1
2244
F_d
Frequency Divider
Current Monitor
2166
$F_b = F_d/n$
S_p
2162
Correlator
2164
2168
S_{out}
S_C
Microcontroller
2160
S_E

Fig. 2d

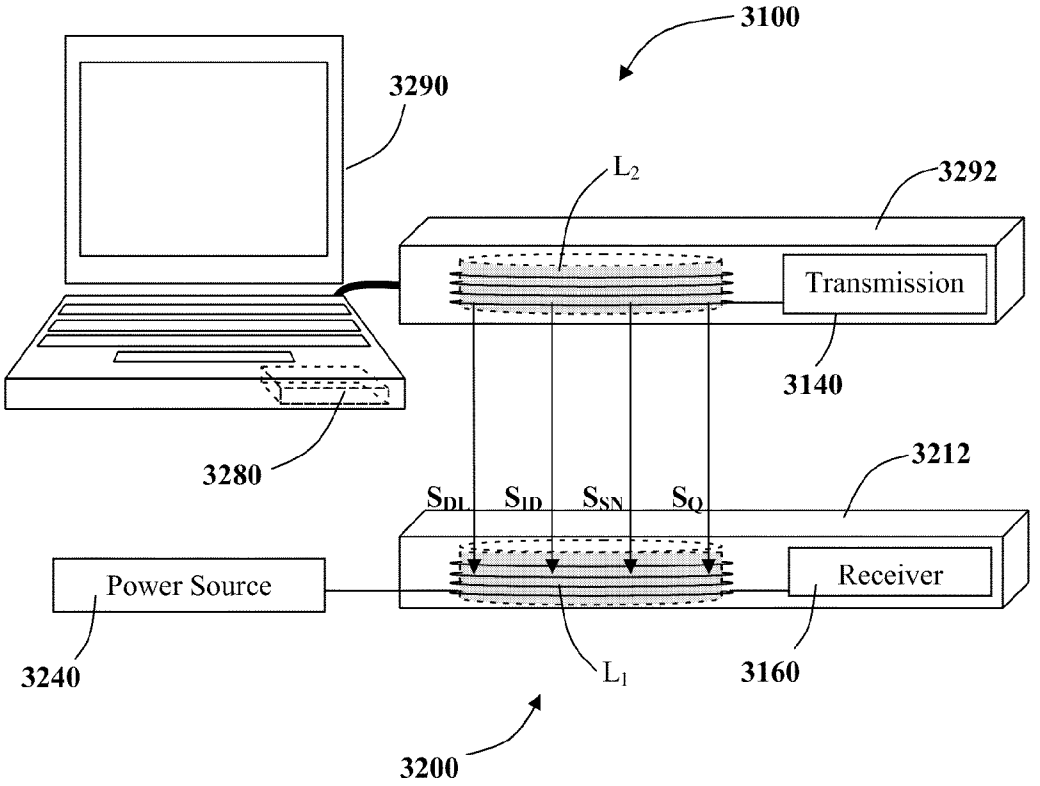
3100
3290
L2
3292
Transmission
3140
3280
3212
SDL
SID
SSN
SQ
Power Source
Receiver
3240
L1
3160
3200

Fig. 3

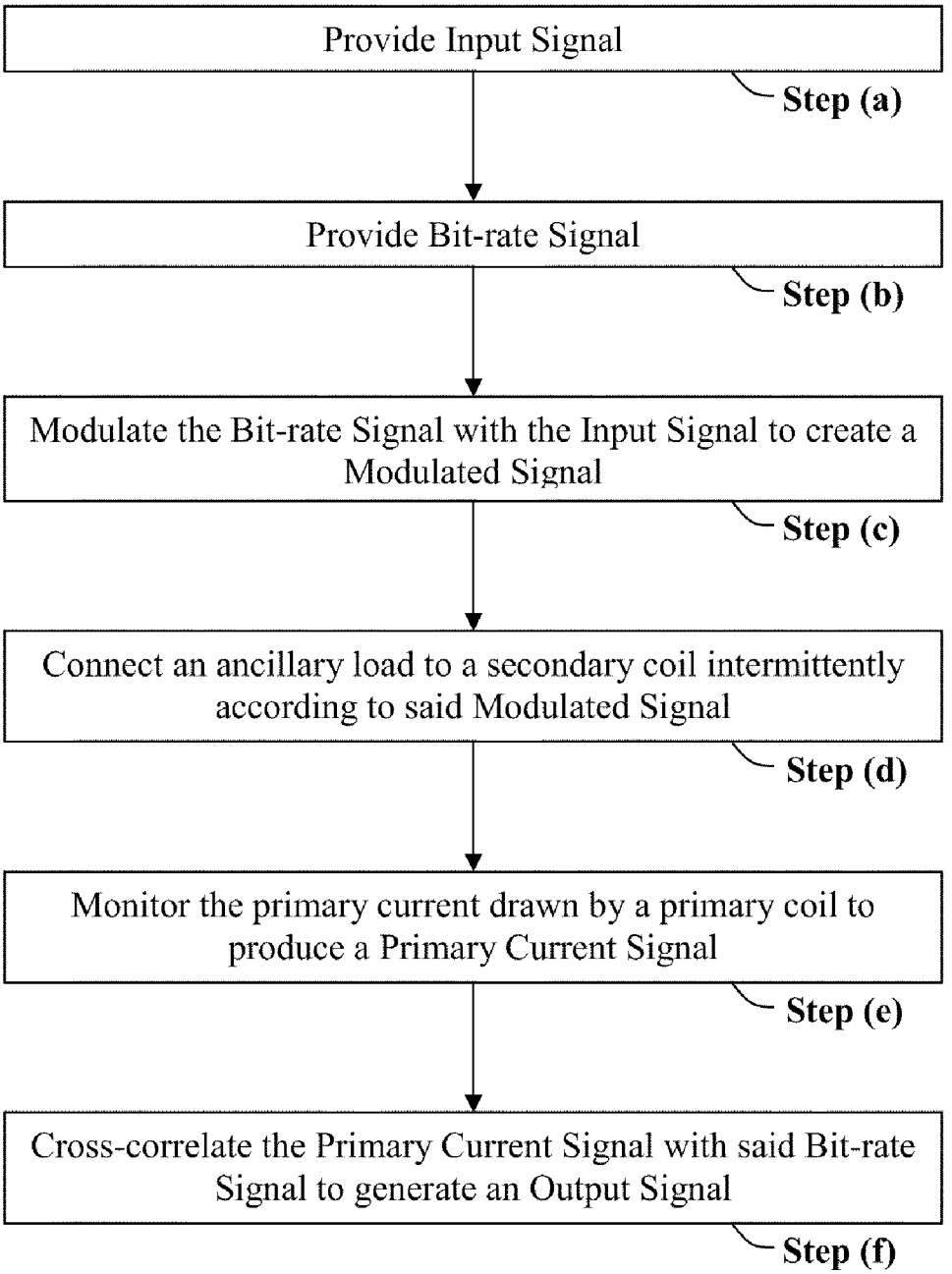
Provide Input Signal
Step (a)
Provide Bit-rate Signal
Step (b)
Modulate the Bit-rate Signal with the Input Signal to create a Modulated Signal
Step (c)
Connect an ancillary load to a secondary coil intermittently according to said Modulated Signal
Step (d)
Monitor the primary current drawn by a primary coil to produce a Primary Current Signal
Step (e)
Cross-correlate the Primary Current Signal with said Bit-rate Signal to generate an Output Signal
Step (f)

Fig. 4

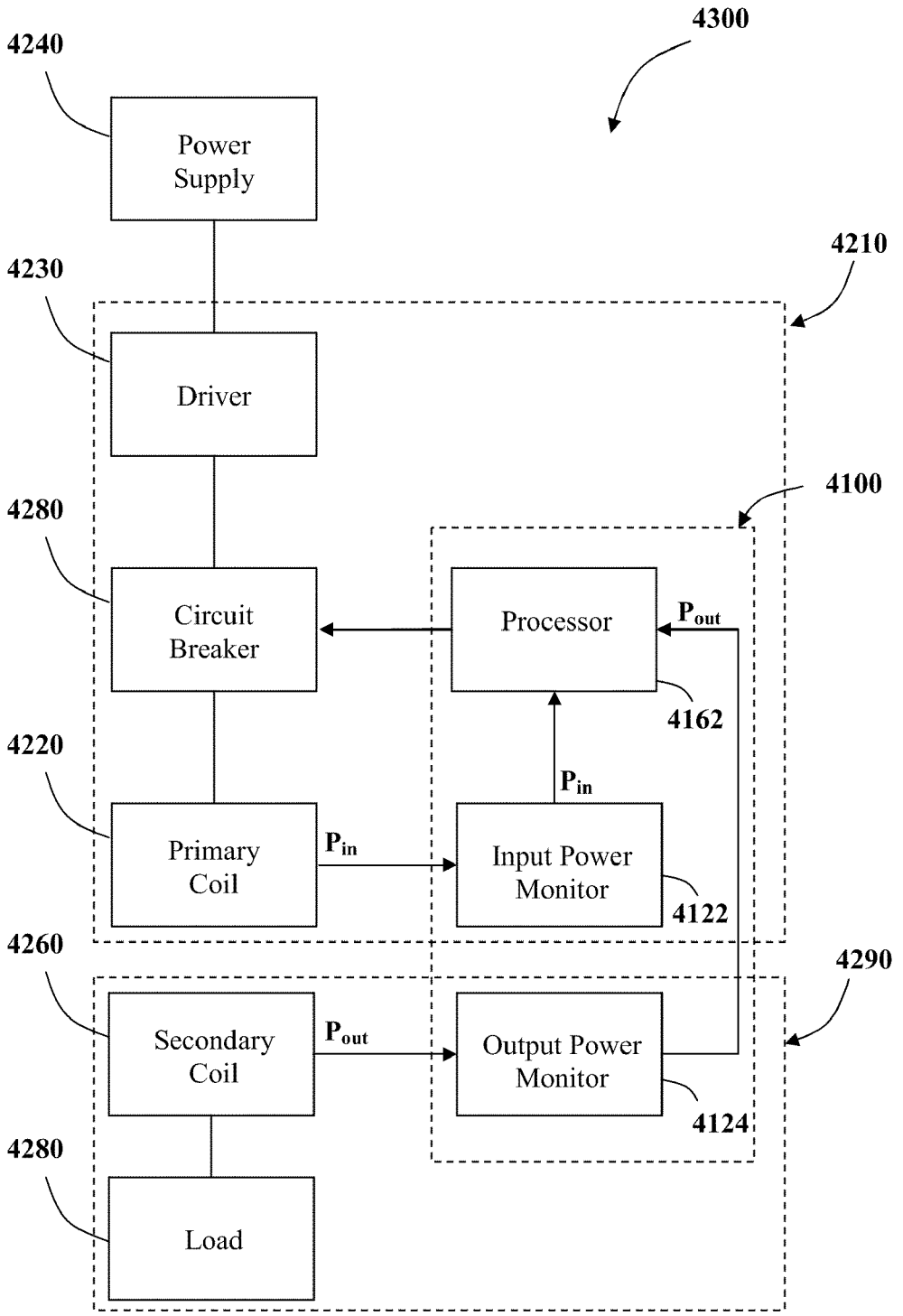
4300
4240
Power Supply
4210
4230
Driver
4100
4280
Circuit Breaker
Processor
P_{out}
4162
4220
P_{in}
Primary Coil
P_{in}
Input Power Monitor
4122
4260
4290
Secondary Coil
P_{out}
Output Power Monitor
4124
4280
Load

Fig. 5

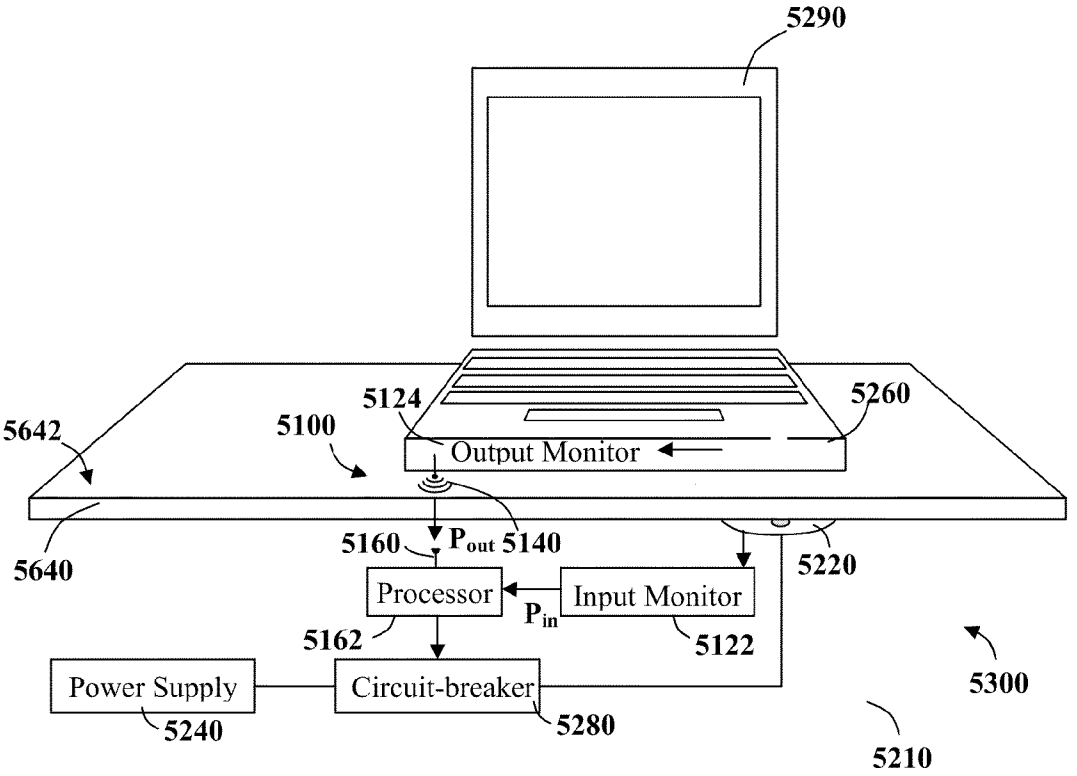
5290
5124
5260
5642
5100
Output Monitor
5640
5160
P_{out} 5140
5220
Processor
Input Monitor
P_{in}
5162
5122
5300
Power Supply
Circuit-breaker
5240
5280
5210

Fig. 6a

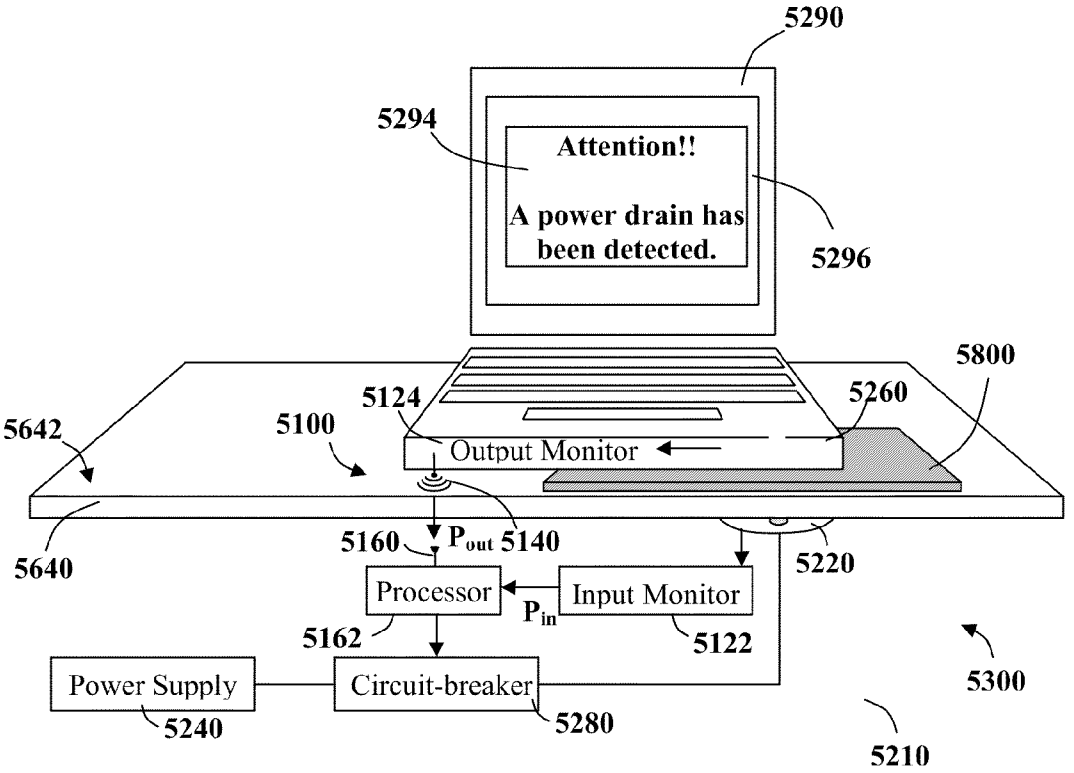
5290
5294
Attention!!
A power drain has been detected.
5296
5800
5124
5260
5642
5100
Output Monitor
5160
P_{out}
5140
5640
5220
Processor
Input Monitor
P_{in}
5162
5122
5300
Power Supply
Circuit-breaker
5240
5280
5210

Fig. 6b

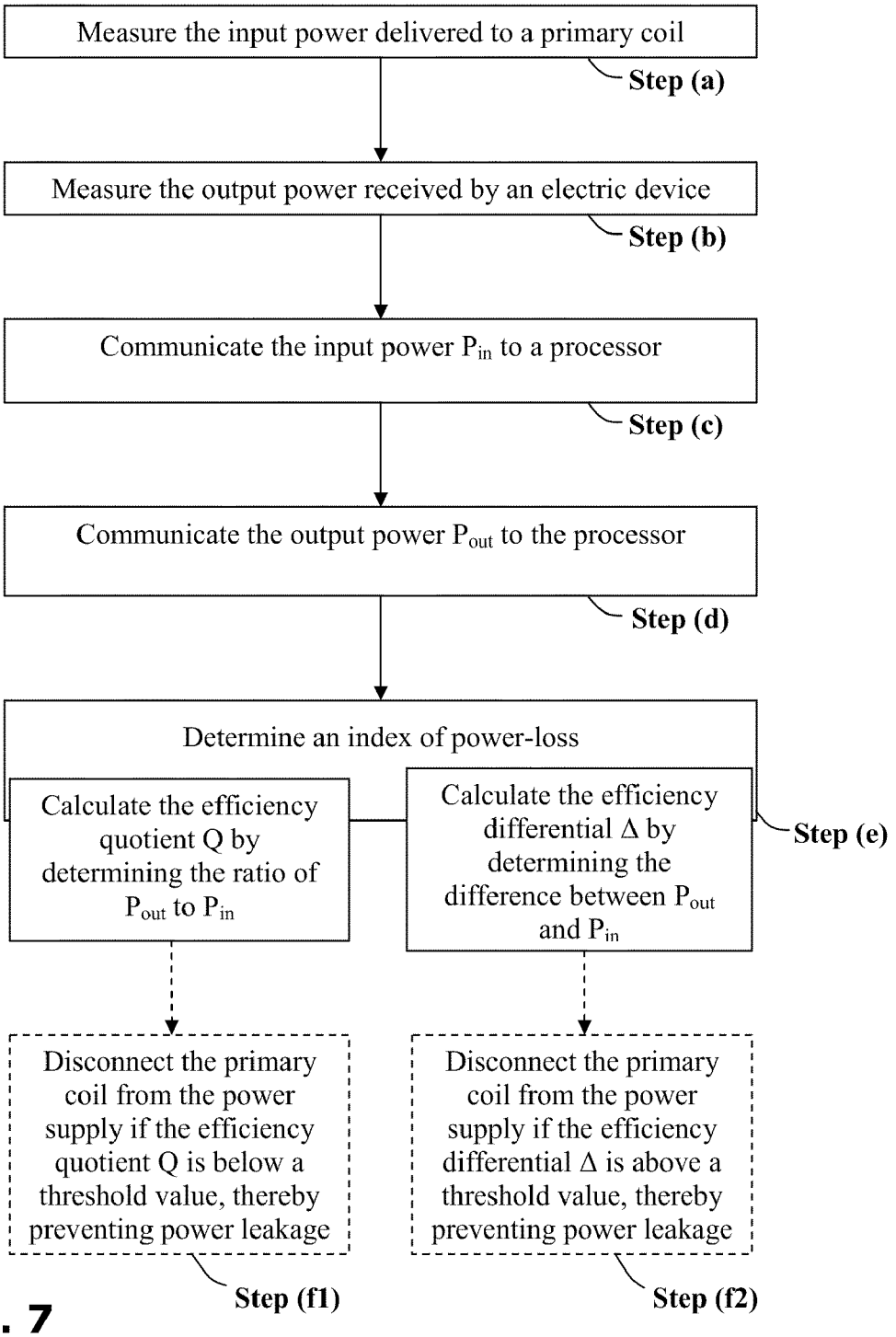
Measure the input power delivered to a primary coil
Step (a)
Measure the output power received by an electric device
Step (b)
Communicate the input power P_{in} to a processor
Step (c)
Communicate the output power P_{out} to the processor
Step (d)
Determine an index of power-loss
Calculate the efficiency quotient Q by determining the ratio of P_{out} to P_{in}
Calculate the efficiency differential Δ by determining the difference between P_{out} and P_{in}
Step (e)
Disconnect the primary coil from the power supply if the efficiency quotient Q is below a threshold value, thereby preventing power leakage
Step (f1)
Disconnect the primary coil from the power supply if the efficiency differential Δ is above a threshold value, thereby preventing power leakage
Step (f2)

Fig. 7

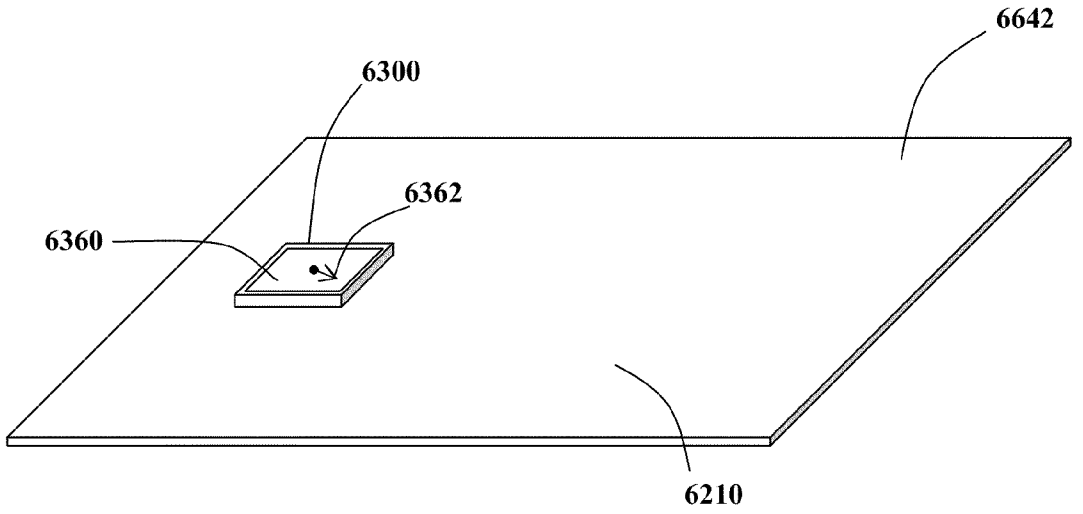

Fig. 8a

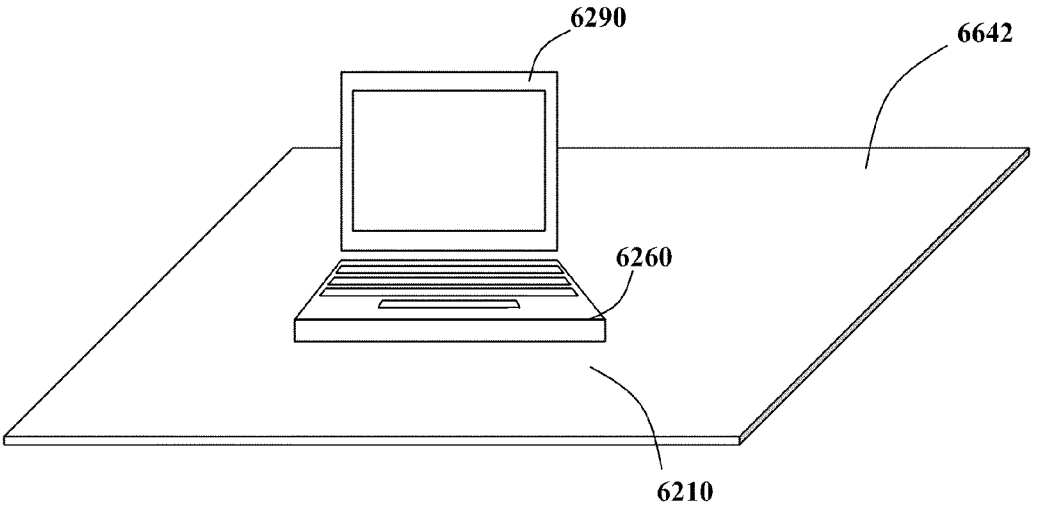

Fig. 8b

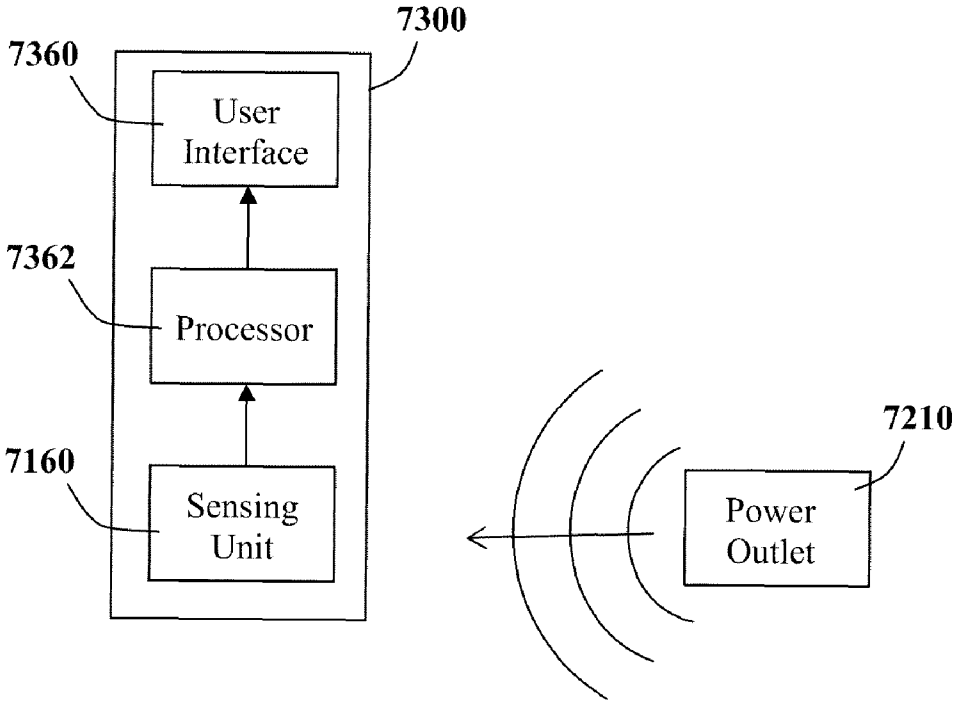
7300
7360
User Interface
7362
Processor
7160
Sensing Unit
7210
Power Outlet

Fig. 9

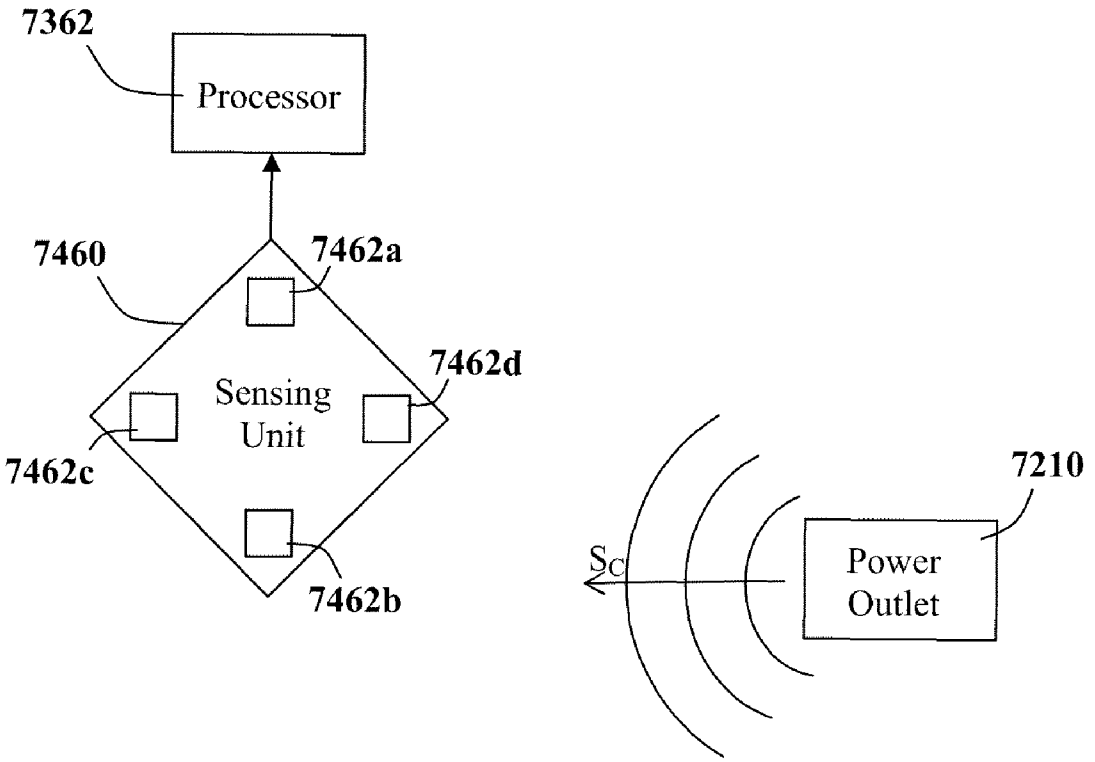
7362
Processor
7460
7462a
7462d
Sensing
Unit
7462c
7462b
7210
Sc
Power
Outlet

Fig. 10

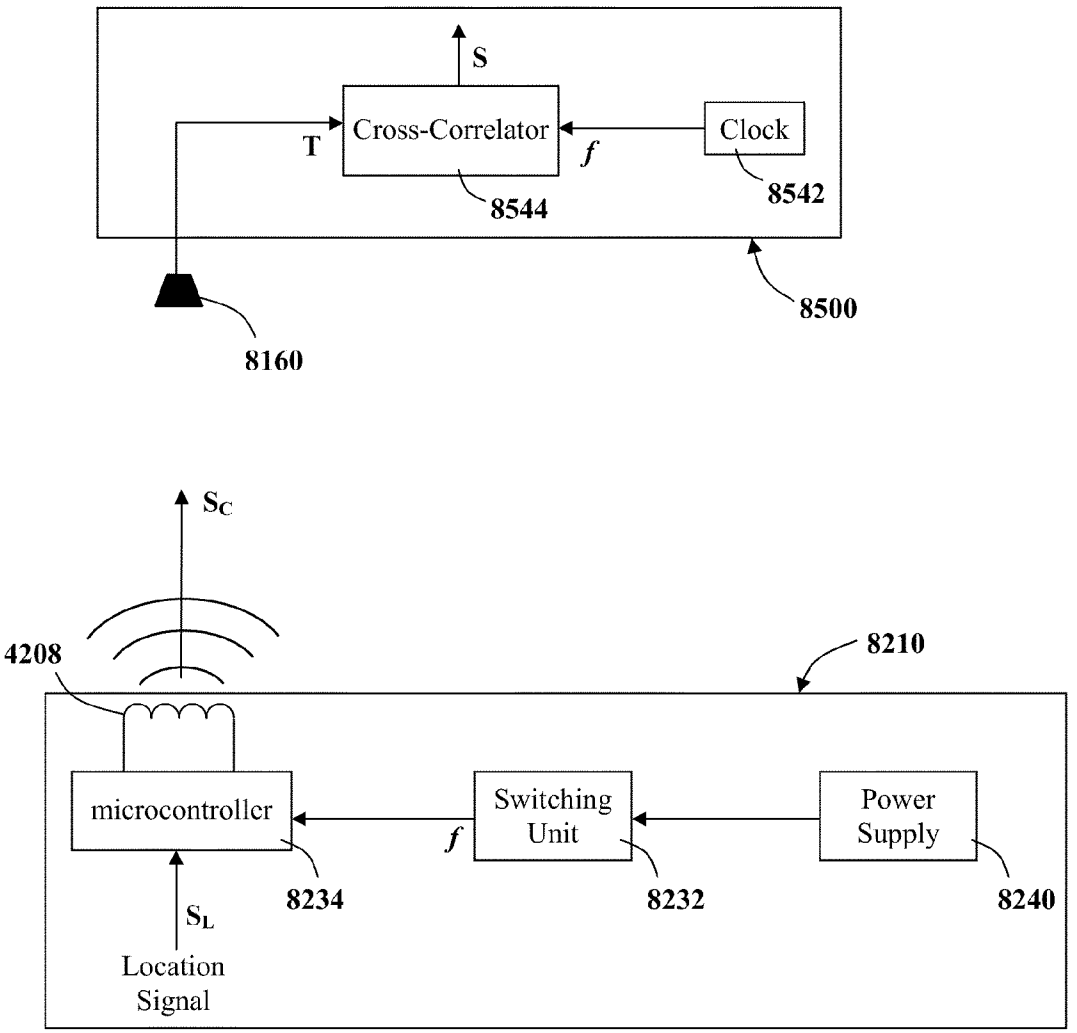
S
Cross-Correlator
Clock
T
f
8544
8542
8500
8160
S_C
4208
8210
microcontroller
Switching Unit
Power Supply
f
8234
8232
8240
S_L
Location Signal

Fig. 11

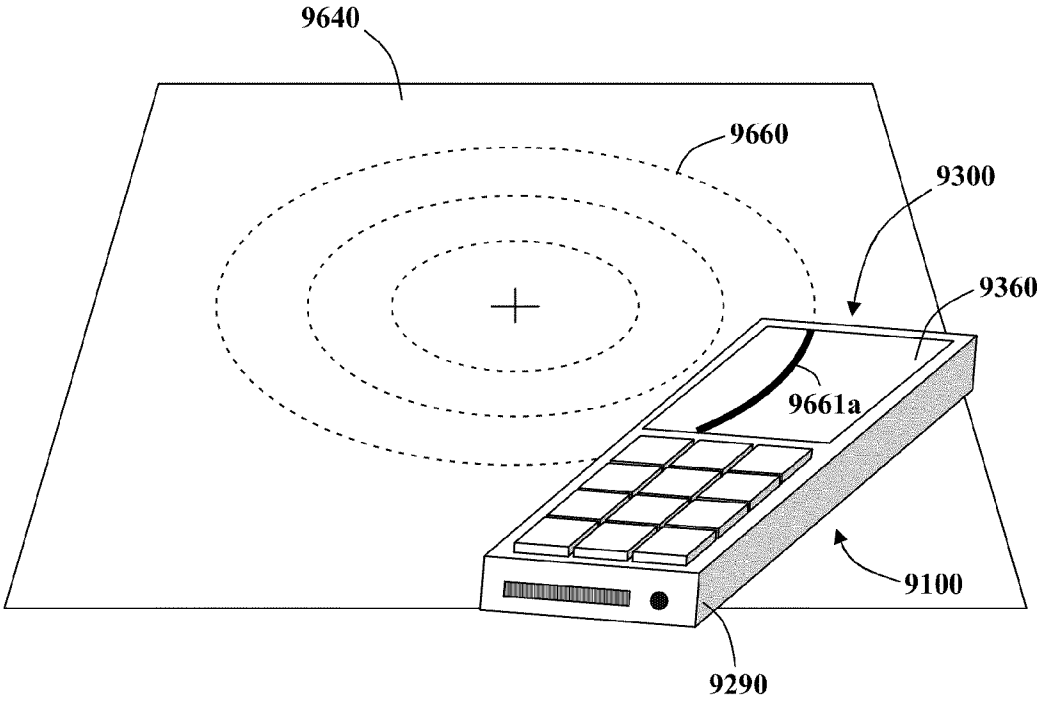

Fig. 12a

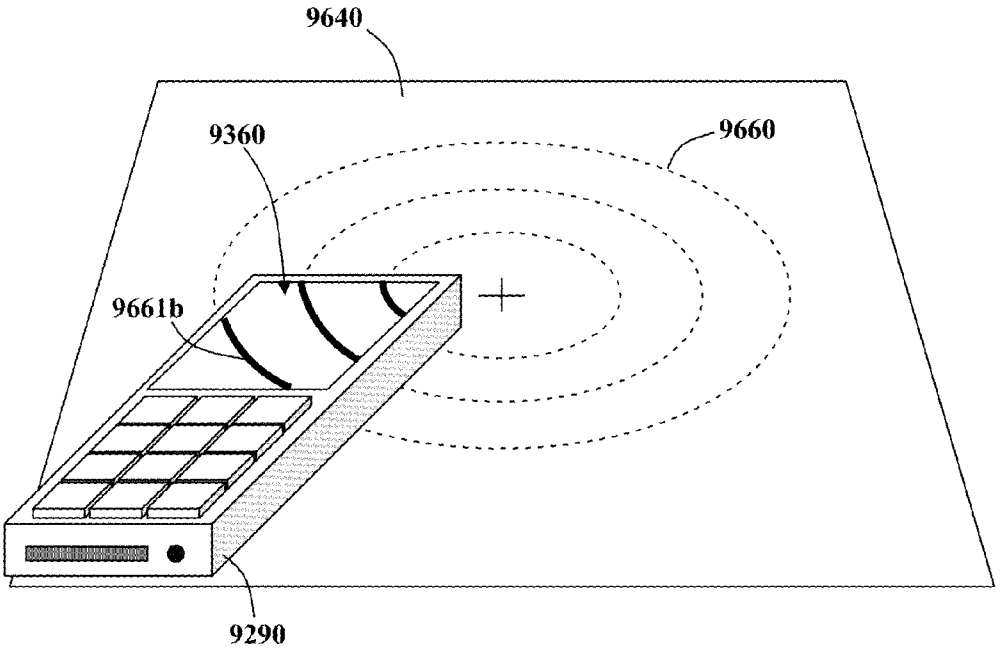

Fig. 12b

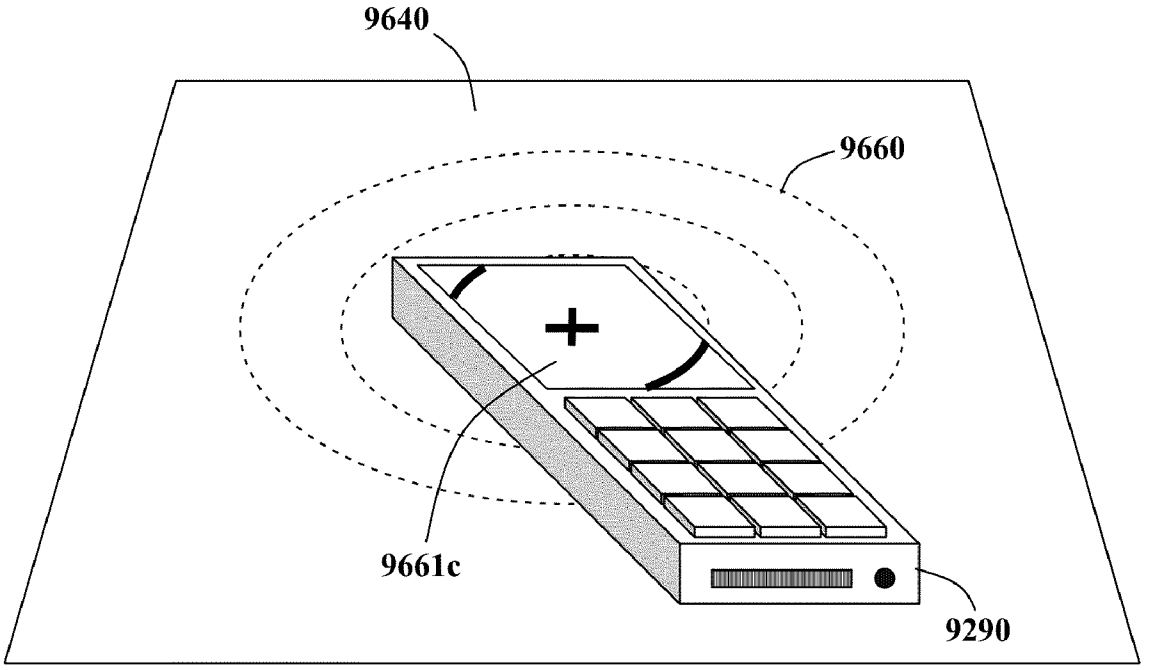

Fig. 12c

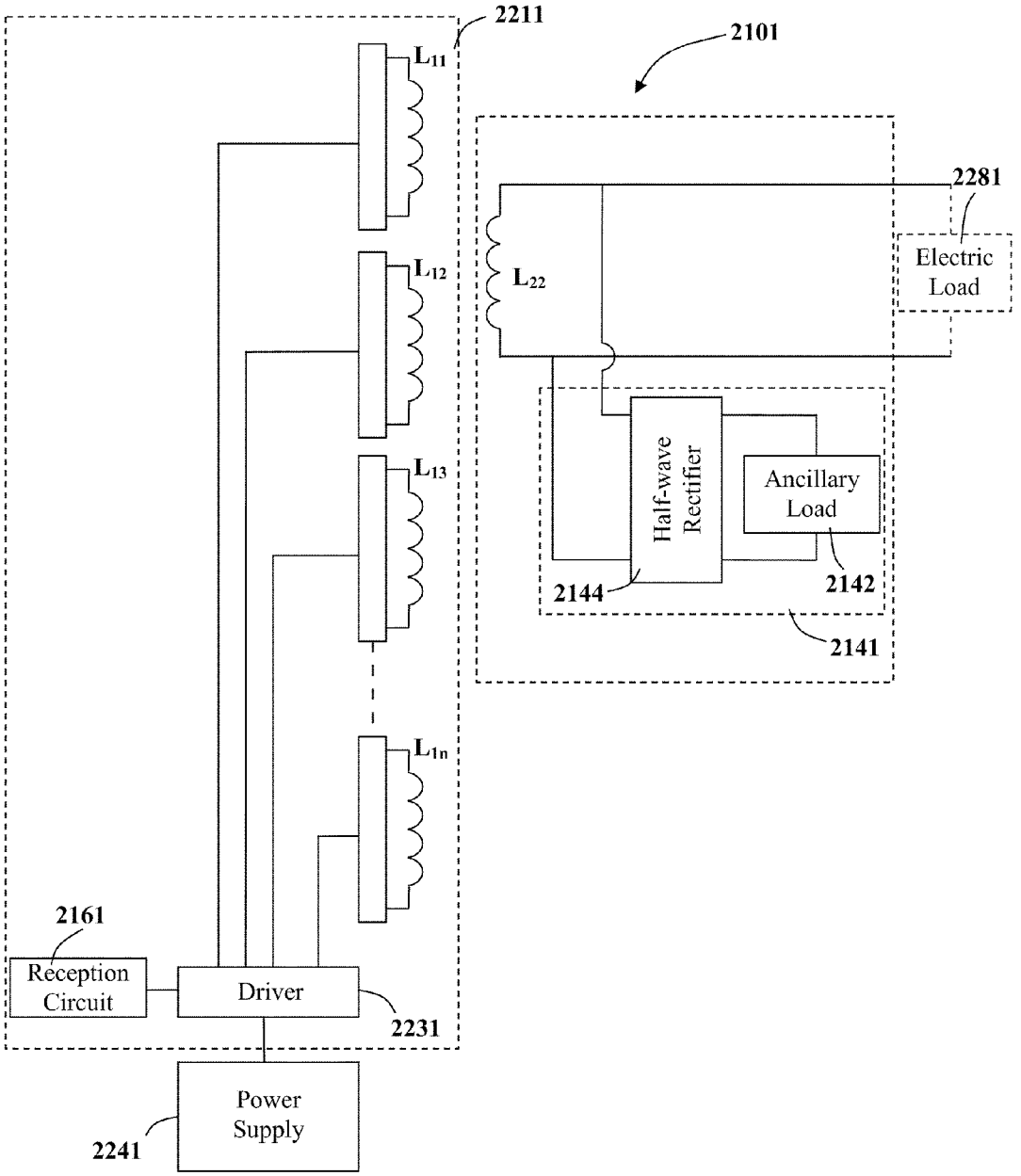
2211
2101
L_{11}
L_{12}
L_{13}
L_{1n}
L_{22}
2281
Electric Load
Half-wave Rectifier
Ancillary Load
2144
2142
2141
2161
Reception Circuit
Driver
2231
Power Supply
2241

Fig. 13

EFFICIENCY MONITOR FOR INDUCTIVE POWER TRANSMISSION

CROSS-REFERENCE TO RELATED APPLICATIONS

This application is a continuation of PCT application Ser. No. PCT/IL2008/000401 filed Mar. 23, 2008, which claims the benefit of U.S. provisional application Ser. Nos. 60/907,132 filed Mar. 22, 2007, 60/935,847 filed Sep. 4, 2007, 61/006,076 filed Dec. 18, 2007, 61/006,106 filed Dec. 19, 2007, 61/006,488 filed Jan. 16, 2008 and 61/006,721 filed Jan. 29, 2008.

FIELD OF THE INVENTION

The present invention relates to a system and method for monitoring efficiency and controlling power transfer across an inductive power coupling.

BACKGROUND

For safety, the power supplying side of a conductive couple is generally the female part, and does not have bare conductive elements protruding therefrom. A plug coupled to the device is the corresponding male part with bare pins. The size of the pins and holes are such that a child cannot insert his or her fingers thereinto. In high quality sockets, an earth connection is provided, and, only when a plug with a longer earth pin is inserted thereinto, is it possible to insert a pin (or anything else) into the holes connected to the current carrying live and neutral wires. Nevertheless, socket holes are dangerous and children do sometimes manage to insert pencils, pins and other objects into socket holes, sometimes with fatal results. Water can also cause shorting and may result in electrocution.

It can therefore be safer and more reliable to provide socket-less power outlets such as inductive couplers. Inductive power coupling allows energy to be transferred from a power supply to an electric load without connecting wires. A power supply is wired to a primary coil and an oscillating electric potential is applied across the primary coil which induces an oscillating magnetic field therearound. The oscillating magnetic field may induce an oscillating electrical current in a secondary coil, placed close to the primary coil. In this way, electrical energy may be transmitted from the primary coil to the secondary coil by electromagnetic induction without the two coils being conductively connected. When electrical energy is transferred inductively from a primary coil to a secondary coil, the pair are said to be inductively coupled. An electric load wired in series with such a secondary coil may draw energy from the power source when the secondary coil is inductively coupled to the primary coil.

Low power inductive electrical power transmission systems over extended surfaces are not new. One such example is described in U.S. Pat. No. 7,164,255 to Hui. In Hui's system a planar inductive battery charging system is designed to enable electronic devices to be recharged. The system includes a planar charging module having a charging surface on which a device to be recharged is placed. Within the charging module, and parallel to the charging surface, at least one, and preferably an array of primary windings are provided. These couple energy inductively to a secondary winding formed in the device to be recharged. Such systems are adequate for charging batteries in that they typically provide a relatively low power inductive coupling. It will be appreciated however, that extended base units such as Hui's charging surface which transmit energy continually approximately uniformly over the whole area of the unit, are not suitable for use with high energy systems.

By not requiring holes for coupling pins, socket-less outlets may be disguised more effectively than conductive sockets, and are thus less obtrusive. A primary inductive coil, for example, may be concealed behind a surface. Generally, the fact that socket-less outlets are less obtrusive is advantageous. But being harder to spot than conventional power outlets has its disadvantages. The user must somehow locate the outlet before being able to use it by bringing a secondary coil into proximity therewith. The problem of locating such sockets is particularly acute where the power outlets are behind a concealing surface such as a desk top or wall, and the positions thereof are adjustable over a large area.

Locating mobile source 'hotspots' or sockets is particularly problematic in high power systems where no extended power transmission surface is provided. Moreover, a high power primary coil produces a large oscillating magnetic field. Where a secondary coil is inductively coupled to the primary coil, the resulting flux linkage causes power to be drawn into the secondary coil. Where there is no secondary coil to focus the power, the oscillating magnetic field causes high energy electromagnetic waves to be transmitted which may be harmful to bystanders. In contrast to low power systems, such as Hui's charging surface, where excess heat may be readily dissipated, uncoupled high power primary coils and their surroundings may become dangerously hot.

In order to provide power to electrical devices in an efficient manner it is important that certain parameters of the power are regulated. By feeding back such parameters as working voltage, current, temperature and the like, the power supply to an electric device may be optimized to minimize energy losses and to prevent excessive heating of the components. Consequently, it may be useful to provide a signal transfer channel for power regulation and the like. Thus a communication channel between source and load device is often provided alongside the power input channel in conventional conductive power supply systems. Methods for providing such a communication channel include wired connections to the device that are often packaged in the same cable as the power lines and conductively coupled to the load via conventional pin-and-socket type connectors.

Leak prevention systems which are able to detect power emanating from a primary coil of an inductive power source and to cut off power to the primary coil if no secondary coil is coupled thereto have been considered. However in order to prevent power leakage from a primary coil while a secondary coil is coupled thereto, a communication channel between the secondary and primary coil would be useful. Nevertheless due to the lack of connecting wires in inductive power couplings, conductive communication channels are not practical.

There is a need for a control system for inductive power outlets, which is capable of locating a concealed power outlet, preventing power leakage from the power outlet, locating secondary coils close to the power outlet and regulating power transfer from the power outlet to a secondary coil coupled thereto. The present invention addresses this need.

SUMMARY OF THE INVENTION

A first aspect of the invention is directed to providing signal transfer system for controlling power transfer across an inductive power coupling, said inductive power coupling comprising a primary inductive coil wired to a power source and a secondary inductive coil wired to an electric load; said system comprising:

a. at least one signal generator for generating a control signal;
b. at least one transmitter for transmitting said control signal, and
c. at least one receiver for receiving said control signal.

Optionally and preferably, the control signal for carrying encoded data pertains to at least one of the group comprising:

d. presence of said electric load;
e. location of said primary inductive coil;
f. location of said secondary inductive coil;
g. required operating voltage for said electric load;
h. required operating current for said electric load;
i. required operating temperature for said electric load;
j. required operating power for said electric load;
k. measured operating voltage for said electric load;
l. measured operating current for said electric load;
m. measured operating temperature for said electric load;
n. measured operating power for said electric load;
o. power delivered to said primary inductive coil;
p. power received by said secondary inductive coil, and a user identification code.

In one embodiment, the signal generator comprises a transmission circuit connected to the secondary inductive coil; the transmitter comprising the secondary inductive coil, and the receiver comprising the primary inductive coil connected to a reception circuit wherein: said transmission circuit comprises an ancillary load selectively connectable to said secondary inductive coil, and said reception circuit comprises at least one power monitor for monitoring power provided to said primary inductive coil.

In one embodiment, the transmission circuit further comprises at least one switching unit comprising: a modulator for modulating a bit-rate signal with an input signal to create a modulated signal; and a switch for intermittently connecting said ancillary load to said secondary inductive coil according to said modulated signal, and said reception circuit further comprises: at least one current monitor for monitoring a primary current drawn by said primary inductive coil, thereby producing a primary current signal, and at least one correlator for cross-correlating said primary current signal with said bit-rate signal, thereby producing an output signal.

The signal transfer system may be further characterized by at least one of the following restrictions:

said switching unit further comprises a controller configured to encode data into said input signal;
said switching unit further comprises a frequency divider;
said inductive power coupling transfers energy with a driving frequency and said bit rate frequency is an integer fraction of said driving frequency;
said inductive power coupling is a device selected from the group comprising:
a transformer, a DC-to-DC converter, an AC-to-DC converter, an AC-to-AC converter, a flyback transformer, a flyback converter, a full-bridge converter, a half-bridge converter and a forward converter; and
said primary inductive coil is galvanically isolated from said secondary inductive coil.

In another embodiment, the transmission circuit further comprises a half-wave rectifier, and the reception circuit is configured to detect second harmonic signals in the power supplied to said primary inductive coil when said secondary inductive coil is coupled thereto.

Optionally, a plurality of the primary inductive coils are each connected to a driver and the driver is configured to selectively operate each primary inductive coil in turn so as to identify which primary inductive coil is closest to the secondary inductive coil.

Optionally, each primary inductive coil is operable at a plurality of power levels and said driver is configured to selectively operate each primary inductive coil at a low power until the primary inductive coil closest to said secondary inductive coil is identified and then to operate said primary inductive coil closest to said secondary inductive coil at a high power.

A second aspect of the invention is directed to an efficiency monitor for monitoring the efficiency of said power transfer comprising the signal transfer system described hereinabove; the efficiency monitor further comprising: at least one input power monitor for measuring the input power delivered to said primary inductive coil; at least one output power monitor for measuring the output power received by said secondary inductive coil; at least one processor for determining an index of power-loss, and at least one communication channel for communicating said input power and said output power to said processor.

Typically, the efficiency monitor is further characterized by at least one of the following restrictions:

the efficiency monitor additionally comprises at least one circuit-breaker for disconnecting said primary inductive coil from said power supply;
the input power monitor is incorporated into an inductive power outlet;
the output power monitor is incorporated into an electric device;
the index of power-loss is an efficiency quotient Q, defined as the ratio of said output power to said input power;
the index of power-loss is an efficiency differential Δ, defined as the difference between said output power and said input power, and

the efficiency monitor additionally comprises hazard detectors in communication with said processor.

Optionally, the efficiency monitor is incorporated into an electric device that further comprises at least one said transmitter for transmitting said output power to said receiver.

Optionally, the transmitter is selected from the group comprising: light emitting diodes, radio transmitters, optocouplers, mechanical oscillators, audio sources, ultrasonic transducers and ancillary load transmission circuits.

The signal transfer system may be incorporated into a power outlet locator for locating an inductive power outlet, said power outlet comprising at least one said primary inductive coil and at least one said transmitter; the system further comprising:

at least one sensor for detecting said control signal;
at least one processor for receiving a sensor signal from said at least one sensor and computing at least one coordinate of a location of said power outlet, and

at least one user interface for receiving a signal from said processor and communicating said location to a user.

Typically, the power outlet locator is further characterized by at least one of the following restrictions:

the at least one sensor being selected to detect an electromagnetic field generated by at least one said primary inductive coil;
the processor calculates the distance between said sensor and said power outlet by comparing the intensity of said control signal received by the sensor with a reference value;
the processor determines the direction of said power outlet by comparing the relative intensities of said control signal as detected by a plurality of said sensors;

the location of said power outlet being encoded into said control signal and decoded by said processor;

the user interface comprises a visual display for indicating the location of said power outlet, and

the user interface comprises an audible signal.

In one embodiment, the power outlet locator is incorporated into an electrical device.

Optionally, the electrical device is further characterized by at least one of the following restrictions:

the electrical device additionally comprises at least one said secondary inductive coil for powering said electrical device;

the electrical device additionally comprises at least one electrochemical power cell for powering said electrical device and at least one said secondary inductive coil wired to said electrochemical cell via a rectifier for charging said electrochemical power cell, and

the electrical device is selected from the group comprising: telephones, personal digital assistants (PDAs), cameras, media players, computers, keyboards and cursor controllers.

A further aspect of the invention is directed to providing a method for transmitting a control signal through an inductive energy coupling comprising a primary inductive coil connected to a power source and a secondary inductive coil connected to an electric load, said method comprising:

providing an input signal;

providing a bit-rate signal;

modulating the bit-rate signal with the input signal to create a modulated signal;

connecting an ancillary load to said secondary inductive coil intermittently according to said modulated signal;

monitoring a primary current drawn by said primary inductive coil and producing a primary current signal, and

cross-correlating said primary current signal with said bit-rate signal to generate an output signal.

A further aspect of the invention is directed to providing a method for monitoring the efficiency of power transmission by an inductive power outlet comprising at least one primary inductive coil wired to a power supply for inductively coupling with a secondary inductive coil wired to an electric device, said method comprising the steps of:

measuring the input power delivered to said primary inductive coil;

measuring the output power received by said electric device;

communicating said input power to a processor;

communicating said output power to said processor, and

said processor determining an index of power-loss.

In one specific method, a working range of values for said index of power-loss is predetermined, and the method comprises the further step of: disconnecting said primary inductive coil from said power supply if said index of power-loss falls outside said working range of values.

BRIEF DESCRIPTION OF THE FIGURES

For a better understanding of the invention and to show how it may be carried into effect, reference will now be made, purely by way of example, to the accompanying drawings.

With specific reference now to the drawings in detail, it is stressed that the particulars shown are by way of example and for purposes of illustrative discussion of the preferred embodiments of the present invention only, and are presented in the cause of providing what is believed to be the most useful and readily understood description of the principles and conceptual aspects of the invention. In this regard, no attempt is made to show structural details of the invention in more detail than is necessary for a fundamental understanding of the invention; the description taken with the drawings making apparent to those skilled in the art how the several forms of the invention may be embodied in practice. In the accompanying drawings:

FIG. **1** is a block diagram showing the main elements of an inductive power coupling incorporating a signal transfer system according to a first embodiment of the invention;

FIG. **2***a-d* show another embodiment of the signal transfer system in which a control signal is transmitted through an inductive energy coupling;

FIG. **3** is a schematic diagram showing a signal transfer system integrated into a contactless inductive power coupling system for powering a computer;

FIG. **4** is a flowchart showing a method for transferring a transmission signal through an inductive energy coupling in accordance with the invention.

FIG. **5** is a block diagram representing another embodiment of the signal transfer system incorporated into an efficiency monitor for monitoring the efficiency of power transmission by an inductive power outlet;

FIG. **6***a* is a schematic diagram of an inductive power outlet with an electrical load inductively coupled thereto, monitored by an efficiency monitor;

FIG. **6***b* is a schematic diagram of the inductive power outlet of FIG. **6***a* wherein a power drain has been introduced between the primary and secondary coils;

FIG. **7** is a flow diagram of a method for using the signal transfer system to monitor the efficiency of power transmission by an inductive power outlet;

FIG. **8***a* is a schematic representation of another embodiment of the signal transfer system incorporated into a power outlet locator used to indicate the location of an inductive power outlet concealed behind a surface;

FIG. **8***b* is a schematic representation of a computer standing on the surface of FIG. **8***a* and being powered by the concealed primary outlet;

FIG. **9** is a block diagram representing the main features of the power outlet locator;

FIG. **10** is a schematic representation of a power outlet locator with four sensors;

FIG. **11** is a block diagram representing a power outlet locator configured to receive and decode a control signal transmitted by a power outlet using still another embodiment of the signal transfer system;

FIG. **12***a-c* are schematic representations of a mobile phone incorporating a power outlet locator, wherein a graphical user interface represents a virtual target superimposed over an image of the surface, and

FIG. **13** is a schematic representation of a signal transfer system incorporated into a system for locating secondary coils placed upon a multi-coil power transmission surface.

DESCRIPTION OF THE PREFERRED EMBODIMENTS

Reference is now made to FIG. **1** showing a block diagram of the main elements of an inductive power coupling **200** incorporating a signal transfer system **100** according to a first embodiment of the invention.

The inductive power coupling **200** consists of a primary inductive coil **220** and a secondary inductive coil **260**. The primary coil **220** is wired to a power supply **240** typically via a driver **230** which provides the electronics necessary to drive the primary coil **220**. Driving electronics may include a

switching unit providing a high frequency oscillating voltage supply, for example. The secondary coil **260** is wired to an electric load **280**.

When the secondary coil **260** is brought into proximity with the primary coil **220**, the pair of coils forms an inductive couple and power is transferred from the primary coil **220** to the secondary coil **260**. In this way a power outlet **210** may provide power to an electric device **290**.

The signal transfer system **100** comprises: a signal generator **120**, for generating a control signal S_C; a transmitter **140** for transmitting said control signal S_C; and a receiver **160** for receiving said control signal S_C.

Although in the signal transfer system **100** described herein, the transmitter **140** is incorporated into the power outlet **210** and the receiver **160** is incorporated into the electrical device **290**, it will be appreciated that a transmitter **140** may alternatively or additionally be incorporated into the electrical device **290** and a receiver **160** may alternatively or additionally be incorporated into the power outlet **210**.

The control signal S_C communicates encoded data pertaining to the power transmission. This data may be pertinent to regulating efficient power transmission. Examples of such data includes parameters such as: required operating voltage, current, temperature or power for the electric load **280**, the measured voltage, current, temperature or power supplied to the electric load **280** during operation, the measured voltage, current, temperature or power received by the electric load **280** during operation and the like.

In other embodiments, the control signal S_C may communicate data relating to the coordinates of the primary inductive coil **220** for the purposes of indicating the location of the power outlet **210**. Alternatively, the control signal S_C may communicate data relating to the identity or presence of the electric load **280** such as the location of the secondary coil **260**, or an identification code or the electric device **290** or its user.

Various transmitters **140** and receivers **160** may be used with the signal transfer system. Where the primary and secondary coils **220**, **260** are galvanically isolated for example, optocouplers may have a light emitting diode serving as a transmitter **140** which sends encoded optical signals over short distances to a photo-transistor which serves as a receiver **160**. Optocouplers typically need to be aligned such that there is a line-of-sight between transmitter and receiver. In systems where alignment between the transmitter **140** and receiver **160** may be problematic, optocoupling may be inappropriate and alternative systems may be preferred such as ultrasonic signals transmitted by piezoelectric elements or radio signals such as Bluetooth, WiFi and the like. Alternatively the primary and secondary coils **220**, **260** may themselves serve as the transmitter **140** and receiver **160**.

Coil-to-coil Signal Transfer

One aspect of the present embodiments relate to a signal transfer system for transferring a transmission signal regarding an electric load connectable via an inductive energy coupling to a power source. The inductive energy coupling comprises a primary coil connectable to the power source in inductive alignment with a secondary coil connectable to the electric load, the system comprises at least one ancillary load; at least one switching unit comprising a modulator for modulating a bit-rate signal with an input signal to create a modulated signal and a switch for intermittently connecting the ancillary load to the secondary coil according to the modulated signal; at least one current monitor for monitoring primary current drawn by the primary coil and producing a primary current signal, and at least one correlator for cross-correlating the primary current signal with the bit-rate signal for producing an output signal.

The switching unit preferably also comprises a controller configured to encode data into the input signal. Typically, the switching unit further comprises a frequency divider and the inductive energy coupling transfers energy with a driving frequency and the bit rate frequency is an integer fraction of the driving frequency.

The inductive energy coupling is typically a device wherein the primary coil is galvanically isolated from said secondary coil. The device may include a transformer, a DC-to-DC converter, an AC-to-DC converter, an AC-to-AC converter, a flyback transformer, a flyback converter, a full-bridge converter, a half-bridge converter, a buck converter, a boost converter, a buck-boost converter, a SEPIC converter or a zeta converter, for example.

Optionally, the input signal carries encoded data pertaining to, for example, the presence of the electric load, required operating voltage for the electric load, required operating current for the electric load, required operating temperature for the electric load, measured operating voltage for the electric load, measured operating current for the electric load, measured operating temperature for the electric load, and/or a user identification code.

In one embodiment, a contactless inductive coupling is provided, comprising the signal transfer system wherein the primary coil is embedded in a power jack and the secondary coil is embedded in a power plug galvanically isolated from the power jack.

An aspect of the technology described herein, teaches a method for transferring a signal through an inductive energy coupling, wherein the inductive energy coupling comprises a primary coil connected to a power source and a secondary coil connected to an electric load, the method comprising the following steps: providing an input signal, providing a bit-rate signal, modulating the bit-rate signal with the input signal to create a modulated signal, connecting an ancillary load to the secondary coil intermittently according to the modulated signal, monitoring a primary current drawn by the primary coil and producing a primary current signal; and cross-correlating the primary current signal with the bit-rate signal to generate an output signal.

According to another aspect, a method for regulating power transfer across a contactless inductive coupling is taught wherein the output signal provides details of power requirements of the load. Typically the input signal is provided by encoding data regarding at least one power requirement of the electric load into the input signal. Optionally and typically, the power requirement depends on parameters such as operating voltage, operating current and/or operating temperature. Alternatively the input signal is provided by monitoring at least one operating parameter of the electric load and encoding monitored parameter data into the input signal. Optionally the parameter is selected from the group comprising operating voltage, operating current and operating temperature. Typically the method for transferring a signal through an inductive energy coupling includes a preliminary step of detecting the presence of an electric load.

Reference is now made to FIGS. **2***a-d* wherein a signal transfer system **2100** according to a second general embodiment of the invention is shown. With particular reference to FIG. **2***a*, the signal transfer system **2100** is configured to transmit a transmission signal through an inductive energy coupling **2200**. The inductive energy coupling **2200** consists of a primary coil L_1 which may be connected to a power source **2240** and a secondary coil L_2, galvanically isolated

therefrom, across which an electric load **2280** may be connected either directly or via an AC-DC converter **2270**.

A transmission circuit **2140** may be connected in parallel with the electric load **2280**. The transmission circuit **2140** comprises an ancillary load **2142** connected to the secondary coil L_2 via a switching unit **2144**. Typically the ancillary load **2142** is much smaller than the electric load **2280**.

A corresponding reception circuit **2160** is connected to the primary coil L_1 of the inductive energy coupling **2200** and comprises a current monitor **2162**, such as an ammeter in series with the primary coil L_1, and a correlator **2164**.

The switching unit **2144** is configured to receive an input signal S_{in}, and a bit-rate signal F_b. A modulator (not shown) modulates the bit-rate signal F_b with the input signal S_{in} to produce a modulated signal S_M. The ancillary load **2142** is intermittently connected to the secondary coil L_2 at a rate determined by the modulated signal S_M.

The power source **2240**, such as an alternating-current voltage source, intermittent direct current voltage source or the like, is configured and operable to produce a primary voltage V_1 which oscillates at a driving frequency F_d. The oscillating primary voltage V_1 in coil L_1 induces a secondary voltage $V_2(t)$ in the secondary coil L_2. The secondary voltage $V_2(t)$ is optionally passed through an AC-DC converter **22** producing a direct-current voltage $V_{22}(t)$.

The electric load **2280** which is coupled to the secondary coil L_2—either directly or via the AC-DC converter **2270**—draws a load current I_{22}. The power P_{22} provided to the load **2280** is given by the scalar product of the voltage V_{22} and the load current I_{22}. When the ancillary load **2144** is connected, an additional ancillary current i_{24} is also drawn. Thus, with the ancillary load **2144** connected, the total power P_2 drawn by the secondary coil L_2 is given by:

$$P_2(t)=\vec{V}_{22}(t)\cdot[\vec{I}_{22}+\vec{i}_{24}(t)]$$

where the ancillary current signal $i_{24}(t)$ varies with the modulated signal S_M.

The input power $P_1(t)$ provided to the primary coil L_1 is given by:

$$P_1(t)=\vec{V}_1(t)\cdot\vec{I}_{10}(t)$$

where the primary voltage $V_1(t)$ oscillates at the driving frequency F_d which is determined by the power supply **2240**.

Input power $P_1(t)$ provided by the primary coil L_1 is generally proportional to the total power $P_{22}(t)$ drawn by the secondary coil L_2, and the primary voltage $V_1(t)$ is determined by the power supply. Perturbations in the primary current $I_{10}(t)$ supplied to the primary coil L_1 are thus in proportion with $i_{24}(t)$.

The current monitor **2162** monitors the primary current $I_{10}(t)$ over time, producing a primary current signal S_p which typically has similar characteristics to the modulated signal S_M. The correlator **2164** is configured to cross-correlate the primary current signal S_p with the bit rate F_b. The output signal S_{out} of the correlator **2164** therefore has the same characteristics as the input signal S_{in}.

In this manner, information carried by the input signal S_{in} is transmitted from the transmission circuit **2140** and is retrievable by the receiver circuit **2160** from the output signal S_{out}. It is noted that the signal transfer system **2100** described herein, transmits a transmission signal across the same inductive power coupling **2200** as used for power transmission. This is in contradistinction to prior art transmission systems, which use additional elements to provide signal transmission channels separate from the power transmission channels. In consequence of this innovative approach, additional transmission elements such as optocouplers, piezoelectric elements, supplementary coil pairs and the like are not generally required.

With reference now to FIG. **2***b*, an exemplary transmission circuit **2140** of the signal transfer system **2100** of FIG. **2***a* is shown. An AC-to-DC converter **2270** comprising a diode **2272** and a capacitor **2274**, which is connected in parallel to the secondary coil L_2, converts an AC secondary voltage V_2 from the secondary coil L_2 into a DC load voltage V_{22} which is connected across an electric load **2280**.

The connection between the ancillary load **2142** and the load voltage V_2 is controlled by a switching unit **2144** which includes a frequency divider **2145**, microcontroller **2146** and a switch **2147**. The frequency divider **2145** provides the bit-rate signal F_b which is passed to the microcontroller **2146**. The microcontroller **2146** is configured to modulate the bit-rate signal F_b according to input signals including control signals S_C from the electric load **2280** and external signals S_E. as described hereinbelow.

Control signals S_C may be used to regulate the power supply. Control signals S_C typically provide data relating to load parameters. Typically these include the required operating voltage, current and temperature and the actual measured operating voltage, current and temperature as monitored during operation of the load.

External Signals S_E may be used to provide the transmission circuit **2140** with external data to be digitally encoded into the input signal S_{in} by the microcontroller **2146** and transmitted to the receiver circuit **2160**. External information, may, for example, provide useful supplementary data such as a user identification code, a pass key, battery level of the load device and the like.

It will be appreciated that the ability to transmit supplementary information such as external signals S_E through the inductive energy coupling **2200** presents a further advantage over prior art systems which are only suitable for transmitting control signals.

FIG. **2***c* shows a schematic representation of an exemplary receiver circuit **2160** in accordance with the signal transfer system of FIG. **2***a*, consisting of a current monitor **2162**, a frequency divider **2166**, a correlator **2164** and a microcontroller **2168**. The frequency divider **2166** provides the bit-rate signal F_b which is typically an integer fraction of the driving frequency F_d. The current monitor **2162** provides a primary current signal S_P which is passed to the correlator **2164** for cross-correlatation with the bit-rate signal F_b. The resulting output signal S_{out} is passed to a microcontroller **2168** which may use the output signal S_{out} to pass a control signal S_C to control the power source **2240** so as to regulate the power provided to the electric load **2280**. The microcontroller **2168** may also be used to extract external signals S_E from the output signal.

An exemplary use of the receiver circuit **2160** of FIG. **2***c* is highlighted in FIG. **2***d* which shows the receiver circuit **2160** configured to control a flyback power source **2240**F. In a flyback converter, a direct current voltage source **2242** is intermittently connected to a primary coil L_1 by a switch **2244**. This produces a varying voltage signal $V_1(t)$ in the primary coil L_1 which induces a secondary voltage V_2 in a secondary coil L_2 (FIG. **2***a*). The secondary coil L_2 is generally connected to a smoothing circuit such the AC-DC converter **2270** shown in FIG. **2***b* to produce a DC output.

The switch **2244** is controlled by a driver **2248** which receives a pulsing signal F_d from a clock **2246**. The pulsing signal F_d determines the frequency with which the direct current voltage source **2242** is connected to the primary coil L_1. The power delivered to the primary coil L_1 may be regu-

lated by varying the duty cycle of the switch **2244**. The duty cycle is the proportion of the time between pulses during which the switch **2244** is closed.

FIG. **2***d* shows the innovative use of the signal transfer system **2100** which receives a feedback signal transferred between the primary and secondary power transmission coils and received by the receiver circuit **2160**. This is an improvement on prior art flyback converters, wherein additional elements such as optocouplers or the like have been used to transmit feedback signals.

The microcontroller **2168** generates a control signal S_C which is relayed to the driver **2248**. The control signal S_C determines the duty cycle of the switch **2248** and so may be used to regulate power transmission.

Although only a flyback converter is represented in FIG. **2***d* it is noted that a control signal S_C thus transmitted may be used to regulate power transfer in a variety of transmission assemblies such as a transformer, a DC-to-DC converter, an AC-to-DC converter, an AC-to-AC converter, a flyback transformer, a full-bridge converter, a half-bridge converter or a forward converter for example.

As an example of the signal transfer system **100** (FIG. **1**), with reference to FIG. **3**, according to a third embodiment of the invention, a signal transfer system **3100** may be integrated into a contactless inductive power coupling system **3200** where power is inductively transmitted from a jack unit **3212** to a plug unit **3292** galvanically isolated therefrom. A transmission circuit **3140** embedded in the plug unit **3292** may be used to transmit control signals S_C to a receiver circuit **3160** in the jack **3212**. Thus once the primary L_1 and secondary L_2 coils are aligned, control signals may be passed between the plug **3292** and jack **3212** units with no need to align additional components such as optocouplers, and the like.

Where a contactless plug **3292** is used, for example to power a portable computer **3290** having on-board power cells **3280**, the signal transfer system **3100** may be used to detect the presence of the load **3290** producing a detection signal S_{DL} and then to provide the jack **3212** with signals relating to the identity of the user S_{ID} and the serial number S_{SN} or other identifier of the laptop computer **3290**. Signals regarding the operating voltage and current required by the PC may be provided as a regulatory signal S_Q which may also provide supplementary information such as information related to the power level of the cells **3280**, for example. Using this signal S_Q, the signal transfer system **3100** may be used to select between powering the computer **3290** directly, recharging the power cells **3280** thereof, or both powering and recharging, depending on defaults and predetermined criteria. It is further noted that when used for recharging cells **3280**, the ability to monitor the temperature of the cells **3280** during recharging may be used to prevent overheating.

Referring to FIG. **4**, a flowchart showing a method for transferring a transmission signal through an inductive energy coupling in accordance with another embodiment of the invention is presented. With further reference to FIG. **2***a*, an Input Signal S_{in}—Step (a) and a Bit-rate Signal F_b—Step (b) are provided to the transmission circuit **2140**. The Bit-rate Signal F_b is then modulated by the Input Signal S_{in}, producing a Modulated Signal S_M—Step (c). An ancillary load **2142** is then connected to the second coil L_2 intermittently according to the Modulated Signal S_M—Step (e). The receiver circuit **2160** monitors the primary current drawn by the primary coil L_1 to produce a Primary Current Signal S_P—Step (e). This Primary Current Signal S_P is then cross-correlated with the Bit-rate Signal F_b to generate an Output Signal S_{out}—Step (f).

The basic signal transfer system and method described hereinabove are capable of variation. For example, it will be appreciated that through the use of such a system, information regarding a load **2280** may be transmitted to the power outlet **2210** across the inductor coils L_1 and L_2 of the inductive coupling **2200**, as a signal superimposed on the power transmitted, without requiring additional data transmitting components.

Power Coupling Efficiency

Embodiments of the invention are directed to providing methods for monitoring the efficiency of power transmission by an inductive power outlet comprising at least one primary coil wired to a power supply, for inductively coupling with a secondary coil wired to an electric device. The method comprises the steps of: measuring the input power delivered to the primary coil, measuring the output power received by the electric device, communicating the input power to a processor, communicating the output power to the processor and the processor determining an index of power-loss.

In one specific application, the index of power-loss is an efficiency quotient Q, being the ratio of the output power to the input power, and the method comprises the further step of: disconnecting the primary coil from the power supply if the efficiency quotient Q is below a threshold value. Typically the threshold efficiency quotient is in the range of from 75% to 95%.

In another application, the index of power-loss is an efficiency differential Δ, being the difference between the output power to the input power, and the method comprises the further step of: disconnecting the primary coil from the power supply if the efficiency differential Δ is above a threshold value.

A further aspect of the technology described herein relates to an efficiency monitor for monitoring the efficiency of power transmission by an inductive power outlet of the type including at least one primary coil wired to a power supply, for inductively coupling with a secondary coil wired to an electric device. The efficiency monitor includes: at least one input power monitor for measuring the input power delivered to the primary coil; at least one output power monitor for measuring the output power received by the secondary coil; at least one processor for determining an index of power-loss; and at least one communication channel for communicating the input power and the output power to the processor.

Typically the efficiency monitor also includes at least one circuit-breaker for disconnecting the primary coil from the power supply. Preferably the input power monitor is incorporated within the power outlet and the output power monitor is incorporated within the electric device.

Optionally, the electric device comprises at least one transmitter for transmitting the output power to a receiver incorporated in the power outlet. The transmitter may include one or more light emitting diodes, radio transmitters, optocouplers, or ancillary load transmitter circuits, for example.

According to preferred embodiments, the efficiency monitor includes one or more hazard detectors in communication with the processor. Such hazard detectors may include magnetic sensors, heat sensors, electromagnetic radiation sensors and Hall probes, for example.

Reference is now made to FIG. **5** showing a block diagram of a signal transfer system **4100**. The signal transfer system **4100** is incorporated into an efficiency monitor **4300** for monitoring the efficiency of power transmission by an inductive power outlet **4210**.

The inductive power outlet **4210** consists of a primary coil **4220** wired to a power supply **4240** via a driver **4230** which provides the electronics necessary to drive the primary coil

4220. Driving electronics may include a switching unit providing a high frequency oscillating voltage supply, for example.

If a secondary coil **4260** is brought into proximity with the primary coil **4220**, the pair of coils forms an inductive couple, and power is transferred from the primary coil **4220** to the secondary coil **4260**. In this way the power outlet **4210** may provide power to an electric device **4262** comprising an electric load **4280** wired in series with the secondary coil **4260**.

The efficiency monitor **4300** consists of an input power monitor **4122** incorporated within the power outlet **4210** and an output power monitor **4124** incorporated within the electric device **4290**, both in communication with a processor **4162**.

The input power monitor **4122** is configured to measure the input power P_{in} provided by the primary coil **4220** and communicates this value to the processor **4162**. The output power monitor **4124** is configured to measure the output power P_{out} received by the secondary coil **4260** and communicates this value to the processor **4162**.

The processor **4162** is configured to receive the values of the input power P_{in} and the output power P_{out} and to calculate an index of power-loss. The index of power loss indicates how much power is leaking from the inductive couple. The index of power-loss may be the efficiency quotient Q which is the ratio between them, P_{out}/P_{in}, which is an indication of the efficiency of the inductive coupling. Alternatively the index of power loss may be the efficiency differential Δ which is the difference between P_{out} and P_{in}.

The processor **4162** may additionally or alternatively be configured to trigger a circuit-breaker **4280** thereby cutting off the primary coil **4220** from the power supply **4240** when the efficiency quotient Q falls below a predetermined threshold or the efficiency differential Δ rises above a predetermined threshold. Typically, this predetermined threshold for the efficiency quotient Q is in the range of from about 75% to 95%, and more preferably about 85%.

With reference to FIG. **6***a*, an efficiency monitor **5300** for an inductive power outlet **5210** is shown. Inductive power outlet **5210** consists of a primary coil **5220** wired to a power source **5240** via an efficiency monitor **5300** all concealed behind a facing layer **5642** of a horizontal platform **5640** such as a desk-top, a kitchen work-top, a conference table or a work bench. The facing layer may be a sheet of self-adhesive plastic film, plastic, vinyl, Formica or wood veneer, for example.

In other embodiments a primary coil **5220** may be concealed beneath or within flooring such as rugs, fitted carpet, parquet, linoleum, floor tiles, tiling, paving and the like. Alternatively the primary coil **5220** may be concealed behind or within a vertical surface such as a wall of a building or a cabinet, for example behind wallpaper or stretched canvas or the like.

The primary coil **5220** may be used to power an electrical device **5290** such as a computer wired to a secondary coil **5260**. The electrical device **5290** is placed upon the surface **5642** of a platform **5640** such that the secondary coil **5260** is aligned with the primary coil **5220** therebeneath.

The efficiency of the power outlet **5210** is monitored by an efficiency monitor **5300**. An input power monitor **5122** is incorporated within the power outlet **5210** behind the platform **5640** and is in direct conductive communication with a processor **5162**. An output power monitor **5124** is incorporated within the electrical device **5290** and is not physically connected to the power outlet **5210**. The output power monitor **5124** communicates with the processor **5162** via a signal transfer system **5100** comprising a transmitter **5140** incorporated within the electrical device **5290** which is configured to transmit a signal to a receiver **5160** incorporated within the power outlet **5210**.

The transmitter **5140** may be a standard transmitter such as those widely used in computing and telecommunications, such as an Infra-red, Wi-fi or Bluetooth transmitter or the like. Indeed, any light emitting diodes, radio transmitters, opto-couplers or other such transmitters of radiation for which the platform **5640** is translucent may be used. Alternatively a fiber optic pathway may be provided through the platform.

In certain embodiments, an optical transmitter, such as a light emitting diode (LED) for example, is incorporated within the power outlet **5210** and is configured and operable to transmit electromagnetic radiation of a type and intensity capable of penetrating the casing of the electrical device **5290**, and the surface layer **5642**. An optical receiver, such as a photodiode, a phototransistor, a light dependent resistors of the like, is incorporated within the primary unit for receiving the electromagnetic radiation transmitted through the surface layer **5642**.

It is noted that many materials are partially translucent to infra-red light. It has been found that relatively low intensity infra red signals from LEDs and the like, penetrate several hundred microns of common materials such as plastic, cardboard, Formica or paper sheet, to a sufficient degree that an optical receiver, such as a photodiode, a phototransistor, a light dependent resistors or the like, behind a sheet of from 0.1 mm to 2 mm of such materials, can receive and process the signal. For example a signal from an Avago HSDL-4420 LED transmitting at 850 nm over 24 degrees, may be detected by an Everlight PD15-22C-TR8 NPN photodiode, from behind a 0.8 mm Formica sheet. For signalling purposes, a high degree of attenuation may be tolerated, and penetration of only a small fraction, say 0.1% of the transmitted signal intensity may be sufficient. Thus an infra-red signal may be used to provide a communication channel between primary and secondary units galvanically isolated from each other by a few hundred microns of wood, plastic, Formica, wood veneer, glass or the like.

The transmitter **5140** and receiver **5160** may be laterally displaced from the primary coil **5220** and secondary coil **5260**. In preferred embodiments, however, the transmitter **5140** is located at the center of the secondary coil **5260** and the receiver **5160** is located at the center of the primary coil **5220**. This permits alignment to be maintained through 360 degree rotation of the secondary coil **5260** relative to the primary coil **5220**.

The processor **5162** is configured to receive the values of the input power P_{in}, directly from the input power monitor **5122**, and the output power P_{out}, via the receiver **5160**. The processor **5162** then calculates the efficiency quotient Q. In normal usage as represented in FIG. **6***a*, the processor records an efficiency quotient Q higher than a predetermined threshold so power transmission continues uninterrupted. When the efficiency quotient Q falls below a predetermined threshold, this indicates that power is being drawn from the primary coil **5220** by some power drain other than the secondary coil **5260**.

FIG. **6***b* is a schematic diagram of the inductive power outlet **5210** of FIG. **6***a* wherein a power drain such as a conductive sheet of metallic foil **5800** is introduced between the primary coil **5220** and the secondary coil **5260**. The oscillating magnetic field produced by the primary coil **5220** when connected to a high frequency oscillating voltage from a driver **5230**, produces eddy currents in the conductive sheet **5800** thereby heating the conductive sheet and draining power from the primary coil **5220**. Such a power drain may be wasteful and/or dangerous. It will be appreciated that leak

prevention systems which cut off power to the primary coil **5220** if no secondary coil **5260** is coupled thereto, would fail to detect this hazard.

In contradistinction to previous systems known to the inventors, embodiments of the present invention measure the efficiency quotient Q. Consequently, when a power drain is introduced, such as that shown in FIG. **6***b*, for example, the output power P_{out} received by the secondary coil **5260** is lower than normal and the efficiency quotient Q may therefore drop below the predetermined threshold. The efficiency monitor **5300** is thus able to detect the hazard.

According to certain embodiments, additional detectors (not shown) may be incorporated within the power outlet **5210**, the platform **5640** or the electrical device **5290** for monitoring other scientific effects which may be indications of possible hazards such as the magnetic field generated by the primary coil **5220**, or the temperature of the platform **5640** for example. Such detectors may function in accordance with one or more of a variety of principles, including, inter alia, magnetic sensing means, Hall probes, heat sensors or electromagnetic sensors.

The processor **5162** may assess the level of the hazard detected by processing the various signals received according to a predetermined logical sequence. If necessary, the processor **5162** may trigger a circuit-breaker **5280** thereby cutting off the primary coil **5220** from the power supply **5240**. Depending on the nature of the hazard, the processor **5162** may additionally or alternatively alert a user to the hazard. The alert may be a visual or audio alarm for example, such as a buzzer or light incorporated in the power transmission surface, or a signal sent to the computer **5290** which displays a warning **5294** on its visual display **5296** or emits a warning sound.

In preferred embodiments the output power P_{out} may be monitored and encoded into the input signal S_{in}. The coil-to-coil signal generator shown in FIG. **2***a* may be used to transmit the input signal S_{in} from a transmission circuit **2140** (FIG. **2***a*) incorporated within an electrical device **290** (FIG. **1**) and is retrievable by the receiver circuit **2160** (FIG. **2***a*) incorporated within the power outlet **210** (FIG. **1**) from the output signal S_{out}. The retrieved signal may then be communicated to a processor which uses it to calculate the efficiency quotient Q.

Reference is now made to FIG. **7** showing a flow diagram of a method for monitoring the efficiency of power transmission by an inductive power outlet according to a further embodiment of the present invention. The method includes the following steps:

a) measuring the input power delivered to a primary coil;
b) measuring the output power received by an electric device;
c) communicating the input power P_{in} to a processor;
d) communicating the output power P_{out} to the processor;
e) determining an index of power-loss, such as an efficiency quotient Q or efficiency differential Δ;
f) optionally, disconnecting the primary coil from the power supply, for example if the efficiency quotient Q is below a threshold value (f**1**) or the efficiency differential Δ is above a threshold value (f**2**), thereby preventing power leakage.

Primary Coil Locators

Another aspect of the invention is directed to providing a power outlet locator for locating an inductive power outlet of the type comprising at least one primary coil wired to a power supply for inductively coupling with a secondary coil wired to an electrical device. Typically, the power outlet locator comprises at least one sensor for detecting the at least one power outlet, at least one processor for receiving a sensor signal from the at least one sensor and computing at least one coordinate of a location of the at least one power outlet and at least one user interface for receiving a signal from the processor and communicating the location to a user.

Preferably, at least one sensor is selected to detect radiation transmitted by the at least one the power outlet. Typically, at least one sensor is selected to detect an electromagnetic field generated by at least one the primary coil. Optionally the processor calculates the distance between the sensor and the power outlet by comparing the intensity of the radiation received by the sensor with a reference value. Typically, the processor determines the direction to the power outlet by comparing the relative intensities of the radiation detected by a plurality of the sensors. Alternatively the location of the power outlet is encoded into a signal transmitted by the power outlet and decoded by the processor.

Typically, the user interface comprises a visual display. Optionally, the visual display indicates the direction of the power outlet. Preferably, the visual display indicates the distance to the power outlet. Preferably, the visual display comprises a graphical user interface representing at least a section of a target comprising concentric rings centered on a point indicating the location of the power outlet. Typically, the power outlet is concealed behind a surface and the target is superimposed upon an image of the surface. Alternatively or additionally, the user interface comprises an audible signal.

Another aspect of the invention is to provide an electrical device incorporating a power outlet locator. Typically, the electrical device additionally comprises at least one secondary inductive coil for powering the electrical device. Optionally, the electrical device additionally comprises at least one electrochemical power cell for powering the electrical device and at least one the secondary inductive coil wired to the electrochemical cell via a rectifier for charging the electrochemical power cell. The electrical device may be, but is not necessarily, selected from the group comprising: telephones, personal digital assistants (PDAs), cameras, media players, computers, keyboards and mice.

Reference is now made to FIG. **8***a* showing a schematic representation of such a power outlet locator **6300** which utilizes such a signal transfer system. The location of an inductive power outlet **6210**, concealed behind a surface **6642**, is indicated by an arrow **6362** displayed upon a visual user interface **6360**.

The inductive power outlet **6210** is wired to a power source typically via a driver **230** (FIG. **1**) providing the electronics necessary to drive the inductive power outlet **6210**, such as a switching unit providing a high frequency oscillating voltage supply, for example.

The inductive power outlet **6210** may be incorporated into a vertical surface such as a wall of a building or a cabinet. The inductive power outlet **6210** may be concealed behind a surface **6642** of wallpaper or stretched canvas for example. Alternatively the inductive power outlet **6210** may be incorporated behind a facing layer of a horizontal platform such as a desk-top, a kitchen work-top, a conference table or a work bench for example of mica, Formica or wood veneer. Alternatively, again, an inductive power outlet **6210** may be concealed beneath flooring such as rugs, fitted carpet, parquet, linoleum, floor tiles, tiling, paving and the like.

It will be apparent that when the location of the inductive power outlet **6210** is known, a secondary coil **6260** may be brought into alignment therewith, as shown in FIG. **8***b*, for example. Thus with reference to FIG. **8***b*, the inductive power outlet **6210** may inductively couple with the secondary coil **6260** and thereby power an electrical device, such as a com-

puter **6290**, wired to the secondary coil **6260**. It is noted that according to some embodiments, the electrical device, such as a computer **6290** may itself incorporate an integral inductive power outlet locator.

With reference now to FIG. **9**, a block diagram representing the main functional components of a power outlet locator **7300** is shown. A sensing unit **7160** configured and operable to detect an inductive power outlet **7210** is provided. A processor **7362**, in communication with the sensing unit **7160**, is configured to compute the location of the power outlet **7210**. A user interface **7360** is provided for communicating the computed location to a user.

According to various embodiments, the sensor unit **7160** may incorporate magnetic sensors such as Hall probes, for example, configured to detect the magnetic field generated by the inductive power outlet directly. Alternatively, the sensor unit **7160** may incorporate a radio receiver for receiving a radio signal transmitted from the power outlet. It will be appreciated, however, that appropriate sensors may be selected for detecting specific electromagnetic wavelengths, including ultra-violet radiation, micro waves, radio waves or even x-ray or shorter wavelengths. Furthermore, the sensing unit may be configured to receive other types of radiation, including mechanical vibrations such as both audible and inaudible (e.g. ultrasonic) sound waves.

By way of example, an exemplary sensing unit **7460** is represented in FIG. **10**, four sensors **7462***a-d*, such as proximity sensors based on volume sensors, infra-red sensors, ultrasonic sensors, magnetic sensors (like Hall probes), inductance sensors, capacitance sensors or the like, are arranged in a diamond configuration.

Each sensor **7462** is configured to receive a control signal S_C transmitted from an inductive power outlet **7210**. The processor **7362** may compare the intensity I of the control signal S_C detected by a sensor **7462** with a reference value I_r to indicate the distance between the sensor **7462** and the power outlet **7210**.

Furthermore, the diamond configuration, provides two perpendicular opposing pairs of sensors **7462***a-b*, **7462***c-d*. The intensity I of the control signal S_C is measured by each sensor independently. The processor **7460** may use the differences between intensities measured by opposing pairs (I_a-I_b), (I_c-I_d) to provide vector coordinates indicating the direction of the power outlet **7210**. Although a two dimensional vector is computed using the two dimensional diamond configuration of sensors described hereinabove, it will be appreciated that a three dimensional vector may be computed from three pairs of sensors in a tetrahedral configuration.

It will be appreciated that the computation method herein described are by way of example, for illustrative purposes only. Alternative methods by which the processor may compute the direction of the power outlet will be familiar to those skilled in the art.

FIG. **11** shows a block diagram representing a power outlet locator **8500** in accordance with yet another embodiment. An inductive power outlet **8210** transmits a control signal S_C which carries an encoded location signal S_L identifying the location of the inductive power outlet **8210**. A primary coil **8220** is connected to a power supply **8240** via a switching unit **8232** and a microcontroller **8234**. The switching unit **8232** is configured to intermittently connect the power supply **8240** to the primary coil **8220** with a bit-rate frequency f. The location of the primary coil **8220** is encoded into a location signal S_L which is sent to the microcontroller **8234**. The microcontroller **8234** is configured to modulate the bit-rate signal with the location signal S_L.

The voltage applied to the primary coil **8220** is thus a modulated variable voltage with a frequency f, carrying an encoded location signal S_L. It will be appreciated that the variable voltage may produce a radio wave of frequency f which may be transmitted as a control signal S_C. Alternatively, the control signal S_C may be transmitted by a dedicated transmitter separate from the primary coil **8220**.

The power outlet locator **8500** includes a receiver **8160**, a clock **8542** and a cross-correlator **8544**. The radio receiver **8160** is tunable to receive radio waves of frequency f, such that it may receive the control signal S_C. The clock **8542** produces a fixed reference signal R of frequency f. The cross-correlator **8544** receives both the reference signal R from the clock **8542** and the control signal S_C from the receiver **8160** and by cross-correlating these signals the location signal S_L is isolated.

Although a digital bit-rate modulated control signal S_C is described hereinabove, it will be appreciated that the control signal S_C may alternatively be modulated in other ways such as by analogue or digital frequency modulation or by amplitude modulation, for example.

The location of the power outlet **8210** may thereby be transmitted to a remote power outlet indicator **8500**, which may then output the location of the power outlet **8210** a user interface **7360** (FIG. **9**).

As shown in FIGS. **12***a-c*, a power outlet locator **9300** may be incorporated into a mobile phone **9290**, for example, thereby providing a convenient means of locating concealed inductive power outlets. A graphical user interface **9360**, displayed upon the visual display of the mobile phone **9290**, represents a virtual target **9660**, centered upon the power outlet (not shown) and superimposed over the surface **9640** behind which the power outlet is concealed.

Although the whole of the virtual target **9660** is represented by a dotted line in FIGS. **12***a-c* for convenience, only the section **9661***a-c* of the virtual target **9660** in the visual display **9360** of the mobile phone **9290** will normally be visible. The displayed section depends upon the location of the mobile phone **9290**. Thus the curvature of the visible concentric arcs may indicate both the direction and distance to the power outlet. It will be appreciated that the virtual target **9660** may be displayed upon a blank background or alternatively may be superimposed upon an image of the surface **9640**, for example a real time image produced by the camera (not shown) of the mobile phone **9660**.

It is further noted that the mobile phone **9290** may itself carry a secondary inductive coil (not shown) wired to a electrochemical cell via a rectifier for inductively coupling with a inductive power outlet and charging the electrochemical power cell. Optimal alignment between the secondary coil and the inductive power outlet may additionally be indicated by an audible signal such as a ring-tone or the like. In other embodiments, particularly useful for the visually impaired, an audible signal may be additionally or alternatively be provided to guide the user to the power outlet, perhaps verbally or alternatively through other variations in pitch, volume or timbre.

It will be apparent that in certain situations such as when the power source of the mobile phone **9660** is completely devoid of power, a power outlet locator **9300** which draws power from the mobile phone **9290** is impractical. In alternative embodiments, therefore, a power outlet locator may be an independently powered unit with a user interface separate from that of the mobile phone **9290**. For example, in another embodiment, the power outlet locator draws power from the secondary inductive coil. Additionally or alternatively, it may include a dedicated electrochemical power source, for

example. The relative brightness of four light emitting diodes mounted upon the corners of the mobile phone may indicate both the direction and proximity to a primary coil.

Whilst the power outlet locator **9300** is incorporated into a mobile phone **9290** it is noted that such a power outlet locator may alternatively be incorporated within other electrical devices such as fixed telephones, personal digital assistants (PDAs), cameras, media players, computers, keyboards, cursor controllers (e.g. mice) and the like.

Secondary Coil Locators

The signal transfer system may be associated with the primary coil and used to detect the location of the secondary inductive coil. For example, in a power outlet surface comprising multiple primary coils, each primary coil may be independently connected to the power source via a driver. The signal transfer system may be used to identify the primary coil closest to the location of a secondary coil. Typically, the primary coils may be driven at multiple power levels, such that a low power level is used to locate the secondary coil and a higher power is used to transfer power when a secondary coil is located.

In preferred embodiments the secondary coil is wired to a transmission circuit comprising an ancillary load connectable to the secondary coil via a half-wave rectifier, such as a diode. The transmission circuit may also comprise a smoothing capacitor, a low power current source and a DC to DC converter.

When in detection mode, the driver activates each primary coil sequentially at low power. When a secondary coil is close enough to a primary coil to inductively couple with it, the low power pulse is transferred from the primary coil to the secondary coil. An AC voltage is induced in the secondary coil and the transmission circuit is activated. A DC current is produced by the half-wave rectifier and flows through the ancillary load.

A control signal is transmitted by the secondary coil due to the transmission circuit. Because half-wave rectification is used, even harmonics of the power transmission frequency are generated. These may be detected by a reception circuit connected to the primary coil, for example by cross-correlating the power transmission frequency with a reference clock frequency.

The strength of the even harmonic signals may indicate the proximity of the primary to the secondary coil. Once a secondary coil is detected, the driver may switch the closest primary coil to power transmission mode, typically at a higher power.

It will be appreciated that in applications where a main electric load is itself wired to the secondary coil via an AC-DC power converter which performs half-wave rectification, even harmonics are produced whenever the secondary coil is coupled to a primary coil, whether or not the ancillary load is connected. The strength and phase of both odd and even harmonics may be continuously monitored during power transmission so that if the secondary coil is displaced or removed it will be readily detected. Optionally the transmission circuit may be deactivated when power is provided to the electric load. Alternatively, where the main load is wired to the secondary coil via a half-wave rectifier, the ancillary load may be dispensed with entirely.

FIG. **13** shows the signal transfer system **2101** according to yet another embodiment of the invention. The signal transfer system **2101** is used for locating a secondary coil L_{22} wired to an electric load **2281**, which is placed somewhere over a multi-coil power transmission surface **2211**.

The multi-coil power transmission surface **2211** comprises an array of primary coils L_{1n} each connected to a driver **2231** wired to a power source **2241**. The signal transfer system **2101** includes a transmission circuit **2141** wired to the secondary coil **2221** and a reception circuit **2161** connected to the driver **2231**. The transmission circuit **2141** includes a half-wave rectifier **2144** connected to an ancillary load **2142** and the reception circuit **2161** is configured to detect second harmonic signals in the power supplied to the primary inductive coil L_{1n} when the secondary inductive coil L_{22} is coupled thereto.

The driver **2231** is configured to selectively operate each primary inductive coil L_{1n} in turn preferably at low power so as to identify which primary inductive coil is closest to the secondary inductive coil L_{22}. When a secondary coil L_{22} is detected, the driver **2231** is then configured to operate the primary inductive coil L_{1n} closest to the secondary inductive coil L_{22} at a high power. It will be appreciated that for some purposes it may be desirable to disconnect the transmission circuit **2141** after the secondary inductive coil L_{22} is coupled to a primary coil L_{1n}.

Thus a number of related technologies are presented that use signal transfer systems across an inductive power coupling to regulate the power and to detect and align the two coils.

The scope of the present invention is defined by the appended claims and includes both combinations and sub combinations of the various features described hereinabove as well as variations and modifications thereof, which would occur to persons skilled in the art upon reading the foregoing description.

In the claims, the word "comprise", and variations thereof such as "comprises", "comprising" and the like indicate that the components listed are included, but not generally to the exclusion of other components.

What is claimed is:

1. An efficiency monitor for monitoring power transmission by an inductive power outlet, the inductive power outlet comprising at least one primary coil wired to a power supply, for inductively coupling with a secondary coil wired to an electric load, the efficiency monitor comprising:

at least one input power monitor for measuring input power delivered to the primary coil;

at least one output power monitor for measuring output power received by the secondary coil;

at least one processor for determining an index of power-loss; and

at least one communication channel for communicating the input power and the output power to the processor;

wherein:

the output power monitor is incorporated into an inductive power receiver unit comprising at least one signal transmitter for transmitting a signal to a receiver incorporated in the power outlet, the signal carrying data pertaining to the output power; and

the transmitter comprises:

an ancillary load selectively connectable to the secondary inductive coil,

a modulator for modulating a bit-rate signal with an input signal to create a modulated signal, and

a switch for intermittently connecting the ancillary load to the secondary inductive coil according to the modulated signal.

2. The efficiency monitor of claim **1** additionally comprising at least one circuit-breaker configured to disconnect the primary coil from the power supply.

3. The efficiency monitor of claim **1** wherein the input power monitor is incorporated into the inductive power outlet.

4. The efficiency monitor of claim **1** wherein the signal transmitter is selected from a group consisting of: light emitting diodes, radio transmitters, optocouplers, and transmitter circuits.

5. The efficiency monitor of claim **1** additionally comprising hazard detectors in communication with the processor.

6. The efficiency monitor of claim **5** wherein the hazard detectors are selected from a group consisting of: magnetic sensors, heat sensors, electromagnetic radiation sensors and Hall probes.

7. The efficiency monitor of claim **1** wherein the index of power-loss comprises at least one of:

an efficiency quotient Q, defined as the ratio of the output power to the input power, and

an efficiency differential Δ, defined as the difference between the output power and the input power.

8. An inductive power receiver comprising at least one secondary coil for inductively coupling to a primary coil and supplying power to an electric load, the inductive power receiver further comprising:

at least one output power monitor for measuring output power received by the secondary coil, and

at least one signal transmitter configured to transmit signals carrying data pertaining to the output power to an efficiency monitor;

wherein the transmitter comprises:

an ancillary load selectively connectable to the secondary inductive coil,

a modulator for modulating a bit-rate signal with an input signal to create a modulated signal, and

a switch for intermittently connecting the ancillary load to the secondary inductive coil according to the modulated signal.

9. The inductive power receiver of claim **8** wherein the signal transmitter is selected from a group consisting of: light emitting diodes, radio transmitters, optocouplers, and transmitter circuits.

10. The inductive power receiver of claim **8** wherein the output power monitor is incorporated into an electric device.

11. The inductive power receiver of claim **10** wherein the electric device is selected from a group consisting of: computers, telephones, personal digital assistance (PDAs), cameras, media players, computers, keyboards and mice.

* * * * *