System Description
Wireless Power Transfer

Volume I: Low Power

Part 1: Interface Definition

Version 1.0.1

October 2010

SAMSUNG EXHIBIT 1010

System Description
Wireless Power Transfer

Volume I: Low Power

Part 1: Interface Definition

Version 1.0.1

October 2010

© Wireless Power Consortium, October 2010

COPYRIGHT

This System Description Wireless Power Transfer is published by the Wireless Power Consortium, and has been prepared by the Wireless Power Consortium in close co-operation with ConvenientPower Ltd., Fulton Innovation LLC, National Semiconductor Corporation, Nokia Corporation, Olympus Imaging Corporation, Research In Motion, Limited, Royal Philips Electronics, Sanyo Electric Co. Ltd., Shenzhen Sang Fei Consumer Communications Co. Ltd., and Texas Instruments Inc.. All rights are reserved. Reproduction in whole or in part is prohibited without express and prior written permission of the Wireless Power Consortium.

DISCLAIMER

The information contained herein is believed to be accurate as of the date of publication. However, neither the Wireless Power Consortium, nor ConvenientPower Ltd., nor Fulton Innovation LLC, nor National Semiconductor Corporation, nor Nokia Corporation, nor Olympus Imaging Corporation, nor Research In Motion Limited, nor Royal Philips Electronics, nor Sanyo Electric Co. Ltd., nor Shenzhen Sang Fei Consumer Communications Co. Ltd., nor Texas Instruments Inc. will be liable for any damages, including indirect or consequential, from use of this System Description Wireless Power Transfer or reliance on the accuracy of this document.

NOTICE

For any further explanation of the contents of this document, or in case of any perceived inconsistency or ambiguity of interpretation, or for any information regarding the associated patent license program, please contact: info@wirelesspowerconsortium.com.

Table of Contents

1 General 1
1.1 Scope 1
1.2 Main features 1
1.3 Conformance and references 1
1.4 Definitions 2
1.5 Acronyms 3
1.6 Symbols 3
1.7 Conventions 4
1.7.1 Cross references 4
1.7.2 Informative text 4
1.7.3 Terms in capitals 4
1.7.4 Notation of numbers 4
1.7.5 Units of physical quantities 4
1.7.6 Bit ordering in a byte 4
1.7.7 Byte numbering 5
1.7.8 Multiple-bit Fields 5
1.8 Operators 5
1.8.1 Exclusive-OR 5
1.8.2 Concatenation 5
2 System Overview (Informative) 7
3 Basic Power Transmitter Designs 11
3.1 Introduction 11
3.2 Power Transmitter designs that are based on a single Primary Coil 11
3.2.1 Power Transmitter design A1 11
3.2.2 Power Transmitter design A2 16
3.3 Power Transmitter designs that are based on an array of Primary Coils 20
3.3.1 Power Transmitter design B1 20
3.3.2 Power Transmitter design B2 26
4 Power Receiver Design Requirements 29
4.1 Introduction 29
4.2 Power Receiver design requirements 30
4.2.1 Mechanical requirements 30
4.2.2 Electrical requirements 31
5 System Control 35
5.1 Introduction 35
5.2 Power Transmitter perspective 38
5.2.1 Ping phase 38
5.2.2 Identification & configuration phase 39
5.2.3 Power transfer phase 42
5.3 Power Receiver perspective 46
5.3.1 Selection phase 46
5.3.2 Ping phase 47

5.3.3 Identification & configuration phase ... 47
5.3.4 Power transfer phase ... 48

6 Communications Interface ... 51

6.1 Introduction ... 51

6.2 Physical and data link layers ... 51
6.2.1 Modulation scheme ... 51
6.2.2 Bit encoding scheme ... 52
6.2.3 Byte encoding scheme ... 52
6.2.4 Packet structure ... 52

6.3 Logical layer ... 55
6.3.1 Signal Strength Packet (0x01) ... 55
6.3.2 End Power Transfer Packet (0x02) ... 56
6.3.3 Control Error Packet (0x03) ... 57
6.3.4 Rectified Power Packet (0x04) ... 57
6.3.5 Charge Status Packet (0x05) ... 57
6.3.6 Power Control Hold-off Packet (0x06) ... 57
6.3.7 Configuration Packet (0x51) ... 58
6.3.8 Identification Packet (0x71) ... 58
6.3.9 Extended Identification Packet (0x81) ... 60

Annex A Example Power Receiver Designs (Informative) ... 61

A.1 Power Receiver example 1 ... 61
A.1.1 Mechanical details ... 61
A.1.2 Electrical details ... 62

A.2 Power Receiver example 2 ... 64
A.2.1 Mechanical details ... 64
A.2.2 Electrical details ... 65

Annex B Object Detection (Informative) ... 67

B.1 Resonance shift ... 67

B.2 Capacitance change ... 68

Annex C Power Receiver Localization (Informative) ... 69

C.1 Guided Positioning ... 69

C.2 Primary Coil array based Free Positioning ... 69
C.2.1 A single Power Receiver covering multiple Primary Cells ... 69
C.2.2 Two Power Receivers covering two adjacent Primary Cells ... 70
C.2.3 Two Power Receivers covering a single Primary Cell ... 70

C.3 Moving Primary Coil based Free Positioning ... 71

Annex D Metal Object Detection (Informative) ... 73

Annex E History of Changes ... 75

 © Wireless Power Consortium, October 2010

List of Figures

Figure 1-1: Bit positions in a byte 5
Figure 1-2: Example of multiple-bit field 5
Figure 2-1: Basic system overview 8
Figure 3-1: Functional block diagram of Power Transmitter design A1 11
Figure 3-2: Primary Coil of Power Transmitter design A1 12
Figure 3-3: Primary Coil assembly of Power Transmitter design A1 13
Figure 3-4: Electrical diagram (outline) of Power Transmitter design A1 14
Figure 3-5: Functional block diagram of Power Transmitter design A2 16
Figure 3-6: Primary Coil of Power Transmitter design A2 17
Figure 3-7: Primary Coil assembly of Power Transmitter design A2 18
Figure 3-8: Electrical diagram (outline) of Power Transmitter design A2 19
Figure 3-9: Functional block diagram of Power Transmitter design B1 20
Figure 3-10: Primary Coil array of Power Transmitter design B1 21
Figure 3-11: Primary Coil array assembly of Power Transmitter design B1 22
Figure 3-12: Electrical diagram (outline) of Power Transmitter design B1 23
Figure 3-13: Multiple type B1 Power Transmitters sharing a multiplexer and Primary Coil array 25
Figure 3-14: Primary Coil array of Power Transmitter design B2 27
Figure 4-1: Example functional block diagram of a Power Receiver 29
Figure 4-2: Secondary Coil assembly 30
Figure 4-3: Dual resonant circuit of a Power Receiver 31
Figure 4-4: Characterization of resonant frequencies 32
Figure 5-1: Power transfer phases 35
Figure 5-2: Power transfer control loop 37
Figure 5-3: Power Transmitter timing in the *ping* phase 39
Figure 5-4: Power Transmitter timing in the *identification & configuration* phase 41
Figure 5-5: Power Transmitter timing in the *power transfer* phase 43
Figure 5-6: PID control algorithm 44
Figure 5-7: Power Receiver timing in the *selection* phase 47
Figure 5-8: Power Receiver timing in the *ping* phase 47
Figure 5-9: Power Receiver timing in the *identification & configuration* phase 48
Figure 5-10: Power Receiver timing in the *power transfer* phase 49
Figure 6-1: Amplitude modulation of the Power Signal 51
Figure 6-2: Example of the differential bi-phase encoding 52
Figure 6-3: Example of the asynchronous serial format 52
Figure 6-4: Packet format 53
Figure A-1: Secondary Coil of Power Receiver example 1 61
Figure A-2: Secondary Coil and Shielding assembly of Power Receiver example 1 62
Figure A-3: Electrical details of Power Receiver example 1 62
Figure A-4: Li-ion battery charging profile 63
Figure A-5: Secondary Coil of Power Receiver example 2 64
Figure A-6: Secondary Coil and Shielding assembly of Power Receiver example 2 65
Figure A-7: Electrical details of Power Receiver example 2 66
Figure B-1: Analog ping based on a resonance shift 67
Figure C-1: Single Power Receiver covering multiple Primary Cells 70
Figure C-2: Two Power Receivers covering two adjacent Primary Cells 70
Figure C-3: Two Power Receivers covering a single Primary Cell 71
Figure C-4: Detection Coil 72

List of Tables

Table 3-1: Primary Coil parameters of Power Transmitter design A1 12
Table 3-2: PID parameters for Operating Frequency control 14
Table 3-3: Operating Frequency dependent scaling factor 14
Table 3-4: PID parameters for duty cycle control 15
Table 3-5: Primary Coil parameters of Power Transmitter design A2 17
Table 3-6: PID parameters for voltage control 19
Table 3-7: Primary Coil array parameters of Power Transmitter design B1 22
Table 3-8: PID parameters for voltage control 24
Table 3-9: Primary Coil array parameters of Power Transmitter design B2 26
Table 5-1: Power Transmitter timing in the *ping* phase 38
Table 5-2: Power Transmitter timing in the *identification & configuration* phase 41
Table 5-3: Power control hold-off time 41
Table 5-4: Power Transmitter timing in the *power transfer* phase 44
Table 5-5: Power Receiver timing in any phase 46
Table 5-6: Power Receiver timing in the *selection* phase 47
Table 5-7: Power Receiver timing in the *identification & configuration* phase 48
Table 5-8: Power Receiver timing in the *power transfer* phase 49
Table 6-1: Amplitude modulation of the Power Signal 52
Table 6-2: Message size 53
Table 6-3: Packet types 54
Table 6-4: Signal Strength 55
Table 6-5: End Power Transfer 56
Table 6-6: End Power Transfer values 56
Table 6-7: Control Error 57
Table 6-8: Rectified Power 57
Table 6-9: Charge Status 57
Table 6-10: Power control hold-off 58
Table 6-11: Configuration 58
Table 6-12: Identification 59
Table 6-13: Extended Identification 60
Table A-1: Secondary Coil parameters of Power Receiver example 1 61
Table A-2: Parameters of the Secondary Coil of Power Receiver example 2 64
Table B-1: Analog ping based on a resonance shift 67
Table E-1: Changes from Version 1.0 to Version 1.01 75

 © Wireless Power Consortium, October 2010

1 General

1.1 Scope

Volume I of the System Description Wireless Power Transfer consists of the following documents:

- Part 1, Interface Definition.
- Part 2, Performance Requirements.
- Part 3, Compliance Testing.

This document defines the interface between a Power Transmitter and a Power Receiver.

1.2 Main features

- A method of contactless power transfer from a Base Station to a Mobile Device, which is based on near field magnetic induction between coils.
- Transfer of around 5 W of power, using an appropriate Secondary Coil (having a typical outer dimension of around 40 mm).
- Operation at frequencies in the 110…205 kHz range.
- Support for two methods of placing the Mobile Device on the surface of the Base Station:
    - Guided Positioning helps a user to properly place the Mobile Device on the surface of a Base Station that provides power through a single or a few fixed locations of that surface.
    - Free Positioning enables arbitrary placement of the Mobile Device on the surface of a Base Station that can provide power through any location of that surface.
- A simple communications protocol enabling the Mobile Device to take full control of the power transfer.
- Considerable design flexibility for integration of the system into a Mobile Device.
- Very low stand-by power achievable (implementation dependent).

1.3 Conformance and references

All specifications in this document are mandatory, unless specifically indicated as recommended or optional or informative. To avoid any doubt, the word **"shall"** indicates a mandatory behavior of the specified component, i.e. it is a violation of this System Description Wireless Power Transfer if the specified component does not exhibit the behavior as defined. In addition, the word **"should"** indicates a recommended behavior of the specified component, i.e. it is not a violation of this System Description Wireless Power Transfer if the specified component has valid reasons to deviate from the defined behavior. And finally, the word **"may"** indicates an optional behavior of the specified component, i.e. it is up to the specified component whether to exhibit the defined behavior (without deviating there from) or not.

In addition to the specifications provided in this document, product implementations shall also conform to the specifications provided in the System Descriptions listed below. Moreover, the relevant parts of the International Standards listed below shall apply as well. If multiple revisions exist of any System Description or International Standard listed below, the applicable revision is the one that was most recently published at the release date of this document.

[Part 2]	System Description Wireless Power Transfer, Volume I, Part 2, Performance Requirements.
[Part 3]	System Description Wireless Power Transfer, Volume I, Part 3, Compliance Testing.
[PRMC]	Power Receiver Manufacturer Codes, Wireless Power Consortium.

[SI] The International System of Units (SI), Bureau International des Poids et Mesures.

1.4 Definitions

Active Area — The part of the Interface Surface of a Base Station respectively Mobile Device through which a sufficiently high magnetic flux penetrates when the Base Station is providing power to the Mobile Device.

Base Station — A device that is able to provide near field inductive power as specified in this System Description Wireless Power Transfer. A Base Station carries a logo to visually indicate to a user that the Base Station complies with this System Description Wireless Power Transfer.

Communications and Control Unit — The functional part of a Power Transmitter respectively Power Receiver that controls the power transfer. (Informative) *Implementation-wise, the Communications and Control Unit may be distributed over multiple subsystems of the Base Station respectively Mobile Device.*

Control Point — The combination of voltage and current provided at the output of the Power Receiver, and other parameters that are specific to a particular Power Receiver implementation.

Detection Unit — The functional part of a Power Transmitter that detects the presence of a Power Receiver on the Interface Surface.

Digital Ping — The application of a Power Signal in order to detect and identify a Power Receiver.

Free Positioning — A method of positioning a Mobile Device on the Interface Surface of a Base Station that does not require the user to align the Active Area of the Mobile Device to the Active Area of the Base Station.

Guided Positioning — A method of positioning a Mobile Device on the Interface Surface of a Base Station that provides the user with feedback to properly align the Active Area of the Mobile Device to the Active Area of the Base Station.

Interface Surface — A flat part of the surface of a Base Station respectively Mobile Device that is closest to the Primary Coil(s) respectively Secondary Coil.

Mobile Device — A device that is able to consume near field inductive power as specified in this System Description Wireless Power Transfer. A Mobile Device carries a logo to visually indicate to a user that the Mobile Device complies with this System Description Wireless Power Transfer.

Operating Frequency — The oscillation frequency of the Power Signal.

Operating Point — The combination of the frequency, duty cycle and amplitude of the voltage that is applied to the Primary Cell.

Packet — A data structure that the Power Receiver uses to communicate a message to the Power Transmitter. A Packet consists of a preamble, a header byte, a message, and a checksum. A Packet is named after the kind of message that it contains.

Power Conversion Unit — The functional part of a Power Transmitter that converts electrical energy to a Power Signal.

Power Pick-up Unit — The functional part of a Power Receiver that converts a Power Signal to electrical energy.

Power Receiver — The subsystem of a Mobile Device that acquires near field inductive power and controls its availability at its output, as defined in this System Description Wireless Power Transfer. For this purpose, the Power Receiver communicates its power requirements to the Power Transmitter.

 © Wireless Power Consortium, October 2010

Power Signal	The oscillating magnetic flux that is enclosed by a Primary Cell and possibly a Secondary Coil.
Power Transfer Contract	A set of boundary conditions on the parameters that characterize the power transfer from a Power Transmitter to a Power Receiver. Violation of any of these boundary conditions causes the power transfer to abort.
Power Transmitter	The subsystem of a Base Station that generates near field inductive power and controls its transfer to a Power Receiver, as defined in this System Description Wireless Power Transfer.
Primary Cell	A single Primary Coil or a combination of Primary Coils that are used to provide a sufficiently high magnetic flux through the Active Area.
Primary Coil	A component of a Power Transmitter that converts electric current to magnetic flux.
Secondary Coil	The component of a Power Receiver that converts magnetic flux to electromotive force.
Shielding	A component in the Power Transmitter respectively Power Receiver that restricts magnetic fields to the appropriate parts of the Base Station respectively Mobile Device.

1.5 Acronyms

AC	Alternating Current
AWG	American Wire Gauge
DC	Direct Current
lsb	least significant bit
msb	most significant bit
N.A.	Not Applicable
PID	Proportional Integral Differential
RMS	Root Mean Square
UART	Universal Asynchronous Receiver Transmitter

1.6 Symbols

C_d	Capacitance parallel to the Secondary Coil [nF]
C_m	Capacitance in the impedance matching network [nF]
C_P	Capacitance in series with the Primary Coil [nF]
C_S	Capacitance in series with the Secondary Coil [nF]
d_s	Distance between a coil and its Shielding [mm]
d_z	Distance between a coil and the Interface Surface [mm]
f_CLK	Communications bit rate [kHz]
f_d	Resonant detection frequency [kHz]
f_op	Operating Frequency [kHz]
f_S	Secondary resonance frequency [kHz]
I_m	Primary Coil current modulation depth [mA]
I_o	Power Receiver output current [mA]
I_P	Primary Coil current [mA]
L_m	Inductance in the impedance matching network [μH]

L_P	Primary Coil self inductance [μH]
L_S	Secondary Coil self inductance (Mobile Device away from Base Station) [μH]
L'_S	Secondary Coil self inductance (Mobile Device on top of Base Station) [μH]
P_{PR}	Total amount of power received through the Interface Surface [W]
P_{PT}	Total amount of power transmitted through the Interface Surface [W]
t_{delay}	Power Control Hold-off Time [ms]
t_{CLK}	Communications clock period [μs]
t_T	Maximum transition time of the communications [μs]
V_r	Rectified voltage [V]
V_o	Power Receiver output voltage [V]

1.7 Conventions

This Section 1.7 defines the notations and conventions used in this System Description Wireless Power Transfer.

1.7.1 Cross references

Unless indicated otherwise, cross references to Sections in either this document or documents listed in Section 1.3, refer to the referenced Section as well as the sub Sections contained therein.

1.7.2 Informative text

With the exception of Sections that are marked as informative, all informative text is set in italics.

1.7.3 Terms in capitals

All terms that start with a capital are defined in Section 1.4. As an exception to this rule, Packet names and fields are defined in Section 6.3.

1.7.4 Notation of numbers

Real numbers are represented using the digits 0 to 9, a decimal point, and optionally an exponential part. In addition, a positive and/or negative tolerance may follow a real number. Real numbers that do not include an explicit tolerance, have a tolerance of half the least significant digit that is specified. (Informative) *For example, a specified value of* $1.23^{+0.01}_{-0.02}$ *comprises the range from 1.21 through 1.24; a specified value of* $1.23^{+0.01}$ *comprises the range from 1.23 through 1.24; a specified value of* $1.23_{-0.02}$ *comprises the range from 1.21 through 1.23; a specified value of 1.23 comprises the range from 1.225 through 1.234999…; and a specified value of* $1.23^{\pm 10\%}$ *comprises the range from 1.107 through 1.353.*

Integer numbers in decimal notation are represented using the digits 0 to 9.

Integer numbers in hexadecimal notation are represented using the hexadecimal digits 0 to 9 and A to F, and are preceded by "0x" (unless explicitly indicated otherwise).

Single bit values are represented using the words ZERO and ONE.

Integer numbers in binary notation and bit patterns are represented using sequences of the digits 0 and 1that are enclosed in single quotes (''). In a sequence of *n* bits, the most significant bit (msb) is bit b_{n-1} and the least significant bit (lsb) is bit b_0; the most significant bit is shown on the left-hand side.

1.7.5 Units of physical quantities

Physical quantities are expressed in units of the International System of Units [SI].

1.7.6 Bit ordering in a byte

The graphical representation of a byte is such that the msb is on the left, and the lsb is on the right. Figure 1-1 defines the bit positions in a byte.

 © Wireless Power Consortium, October 2010

msb							lsb
b_7	b_6	b_5	b_4	b_3	b_2	b_1	b_0

Figure 1-1: Bit positions in a byte

1.7.7 Byte numbering

The bytes in a sequence of *n* bytes are referred to as B_0, B_1, …, B_{n-1}. Byte B_0 corresponds to the first byte in the sequence; byte B_{n-1} corresponds to the last byte in the sequence. The graphical representation of a byte sequence is such that B_0 is at the upper left-hand side, and byte B_{n-1} is at the lower right-hand side.

1.7.8 Multiple-bit Fields

Unless indicated otherwise, a multiple bit field in a data structure represents an unsigned integer value. In a multiple-bit field that spans multiple bytes, the msb of the multiple-bit field is located in the byte with the lowest address, and the lsb of the multiple-bit field is located in the byte with the highest address. (Informative) *Figure 1-2 provides an example of a 6-bit field that spans two bytes.*

						b_5	b_4

B_0

b_3	b_2	b_1	b_0				

B_1

Figure 1-2: Example of multiple-bit field

1.8 Operators

This Section 1.8 defines the operators used in this System Description Wireless Power Transfer, which are less commonly used. The commonly used operators have their usual meaning.

1.8.1 Exclusive-OR

The symbol '⊕' represents the exclusive-OR operation.

1.8.2 Concatenation

The symbol '||' represents concatenation of two bit strings. In the resulting concatenated bit string, the msb of the right-hand side operand directly follows the lsb of the left-hand side operand.

This page is intentionally left blank.

 © Wireless Power Consortium, October 2010

2 System Overview (Informative)

Operation of devices that comply with this System Description Wireless Power Transfer relies on magnetic induction between planar coils. Two kinds of devices are distinguished, namely devices that provide wireless power—referred to as Base Stations—and devices that consume wireless power—referred to as Mobile Devices. Power transfer always takes place from a Base Station to a Mobile Device. For this purpose, a Base Station contains a subsystem—referred to as a Power Transmitter—that comprises a Primary Coil,[1] and a Mobile Device contains a subsystem—referred to as a Power Receiver—comprises a Secondary Coil. In fact, the Primary Coil and Secondary Coil form the two halves of a coreless resonant transformer. Appropriate Shielding at the bottom face of the Primary Coil and the top face of the Secondary Coil, as well as the close spacing of the two coils, ensures that power transfer occurs with an acceptable efficiency. In addition, this Shielding minimizes the exposure of users to the magnetic field.

Typically, a Base Station has a flat surface—referred to as the Interface Surface—on top of which a user can place one or more Mobile Devices. This ensures that the vertical spacing between Primary Coil and Secondary Coil is sufficiently small. In addition, there are two concepts for horizontal alignment of the Primary Coil and Secondary Coil. In the first concept—referred to as Guided Positioning—the user must actively align the Secondary Coil to the Primary Coil, by placing the Mobile Device on the appropriate location of the Interface Surface. For this purpose, the Mobile Device provides an alignment aid that is appropriate to its size, shape and function. The second concept—referred to as Free Positioning—does not require the active participation in alignment of the Primary Coil and Secondary Coil. One implementation of Free Positioning makes use of an array of Primary Coils to generate a magnetic field at the location of the Secondary Coil only. Another implementation of Free Positioning uses mechanical means to move a single Primary Coil underneath the Secondary Coil.

Figure 2-1 illustrates the basic system configuration. As shown, a Power Transmitter comprises two main functional units, namely a Power Conversion Unit and a Communications and Control Unit. The diagram explicitly shows the Primary Coil (array) as the magnetic field generating element of the Power Conversion Unit. The Control and Communications Unit regulates the transferred power to the level that the Power Receiver requests. Also shown in the diagram is that a Base Station may contain multiple Transmitters in order to serve multiple Mobile Devices simultaneously (a Power Transmitter can serve a single Power Receiver at a time only). Finally, the system unit shown in the diagram comprises all other functionality of the Base Station, such as input power provisioning, control of multiple Power Transmitters, and user interfacing.

A Power Receiver comprises a Power Pick-up Unit and a Communications and Control Unit. Similar to the Power Conversion Unit of the Transmitter, Figure 2-1 explicitly shows the Secondary Coil as the magnetic field capturing element of the Power Pick-up Unit. A Power Pick-up Unit typically contains a single Secondary Coil only. Moreover, a Mobile Device typically contains a single Power Receiver. The Communications and Control Unit regulates the transferred power to the level that is appropriate for the subsystems connected to the output of the Power Receiver. These subsystems represent the main functionality of the Mobile Device. An important example subsystem is a battery that requires charging.

The remainder of this document is structured as follows. Section 3 defines the basic Power Transmitter designs, which come in two basic varieties. The first type of design—type A—is based on a single Primary Coil (either fixed position or moveable). The second type of design—type B—is based on an array of Primary Coils. Note that this version 1.0.1 of the System Description Wireless Power Transfer, Volume I, Part 1, offers only limited design freedom with respect to actual Power Transmitter implementations. The reason is that Mobile Devices exhibit a much greater variety of design requirements with respect to the Power Receiver than a Base Station does to Power Transmitters—for example, a smart phone has design requirements that differ substantially from those of a wireless headset. Constraining the Power Transmitter therefore enables interoperability with the largest number of mobile devices.

[1]Note that the Primary Coil may be a "virtual coil," in the sense that an appropriate array of planar coils can generate a magnetic field that is similar to the field that a single coil generates.

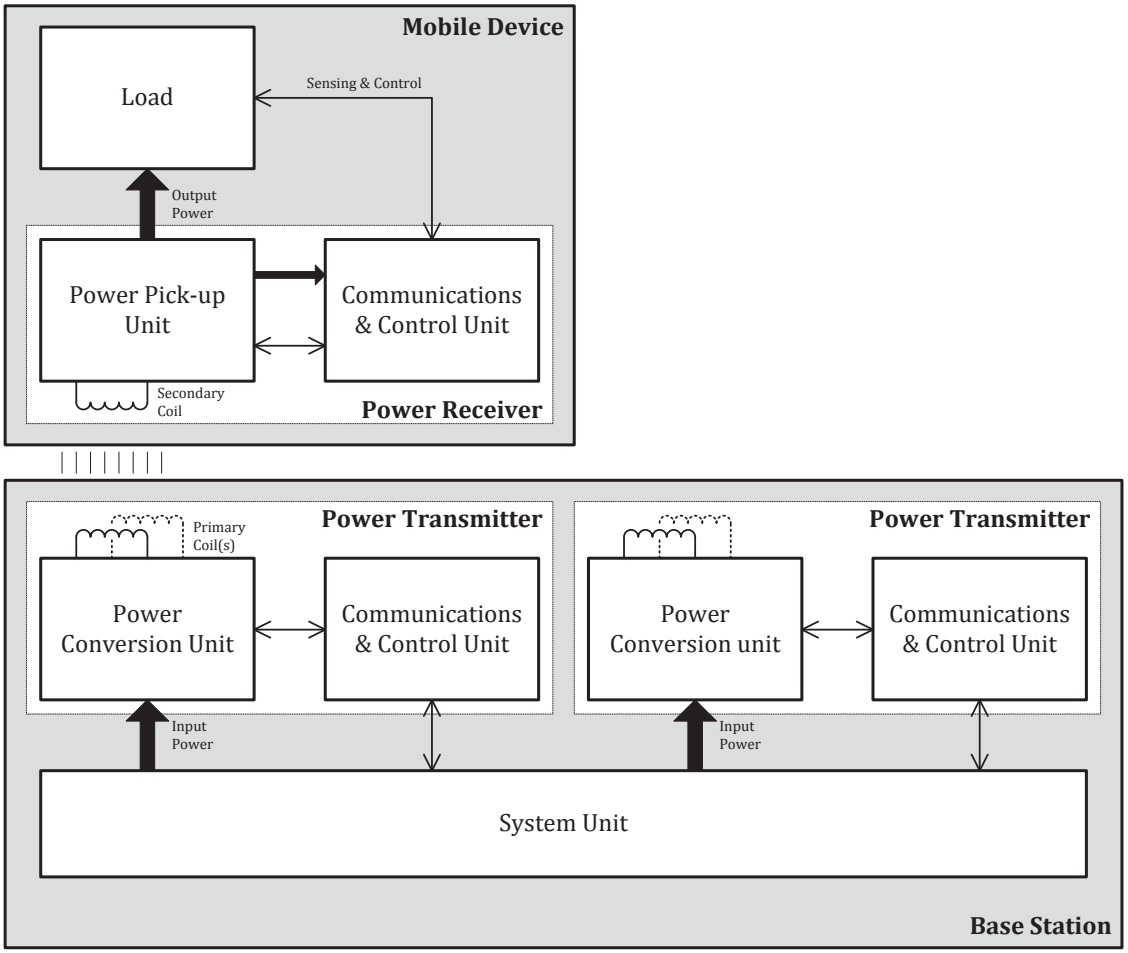

Figure 2-1: Basic system overview

Section 4 defines the Power Receiver design requirements. In view of the wide variety of Mobile Devices, this set of requirements has been kept to a minimum. In addition to the design requirements, Section 4 is complemented with two example designs in Annex A.

Section 5 defines the system control aspects of the power transfer. The interaction between a Power Transmitter and a Power Receiver comprises four phases, namely *selection, ping, identification & configuration,* and *power transfer.* In the *selection* phase, the Power Transmitter attempts to discover and locate objects that are placed on the Interface Surface. In addition, the Power Transmitter attempts to discriminate between Power Receivers and foreign objects and to select a Power Receiver (or object) for power transfer. For this purpose, the Power Transmitter may select an object at random and proceed to the *ping* phase (and subsequently to the *identification & configuration* phase) to collect necessary information. Note that if the Power Transmitter does not initiate power transfer to a selected Power Receiver, it should enter a low power stand-by mode of operation.[2] In the *ping* phase, the Power Transmitter attempts to discover if an object contains a Power Receiver. In the *identification & configuration* phase, the Power Transmitter prepares for power transfer to the Power Receiver. For this purpose, the Power Transmitter retrieves relevant information from the Power Receiver. The Power Transmitter combines this information with information that it stores internally to construct a so-called Power Transfer Contract, which comprises various limits on the power transfer. In the *power transfer*

[2]A definition of such a stand-by mode is outside the scope of this version 1.0.1 System Description Wireless Power Transfer, Volume I, Part 1. However, [Part 2] provides requirements on the maximum power use of a Power Transmitter when it is not actively providing power to a Power Receiver.

 © Wireless Power Consortium, October 2010

phase, the actual power transfer takes place. During this phase, the Power Transmitter and the Power Receiver cooperate to regulate the transferred power to the desired level. For this purpose, the Power Receiver communicates its power needs on a regular basis. In addition, the Power Transmitter continuously monitors the power transfer to ensure that the limits collected in the Power Transfer Contract are not violated. If a violation occurs anyway, the Power Transmitter aborts the power transfer.

The various Power Transmitter designs employ different methods to adjust the transferred power to the requested level. Three commonly used methods include frequency control—the Primary Coil current, and thus the transferred power, is frequency dependent due to the resonant nature of the transformer—duty cycle control—the amplitude of the Primary Coil current scales with the duty cycle of the inverter that is used to drive it—and voltage control—the Primary Coil current scales with the driving voltage. Whereas the details of these control methods are defined in Section 3, Section 5 defines the overall error based control strategy. This means that the Power Receiver communicates the difference between a desired set point and the actual set point to the Power Transmitter, which adjusts the Primary Coil current so as to reduce the error towards zero. There are no constraints on how the Power Receiver derives its set point from parameters such as power, voltage, current, and temperature. This leaves the option to the Power Receiver to apply any desired control strategy.

This version 1.0.1 of the System Description Wireless Power Transfer, Volume I, Part 1, defines communications from the Power Receiver to the Power Transmitter only. Section 6 defines the communications interface. On a physical level, communications from the Power Receiver to the Power Transmitter proceed using load modulation. This means that the Power Receiver switches the amount of power that it draws from the Power Transmitter between two discrete levels (note that these levels are not fixed, but depend on the amount of power that is being transferred). The actual load modulation method is left as a design choice to the Power Receiver. Resistive, capacitive, and inductive schemes are all possible. On a logical level, the communications protocol uses a sequence of short messages that contain the relevant data. These messages are contained in Packets, which are transmitted in a simple UART like format.

Annex A provides two example Power Receiver designs. The design shown in the first example directly provides the rectified voltage from the Secondary Coil to a single-cell lithium-ion battery for charging at constant current or voltage. The design shown in the second example uses a post-regulation stage to create a voltage source at the output of the Power Receiver.

This version 1.0.1 of the System Description Wireless Power Transfer, Volume I, Part 1, does not define how a Power Transmitter should detect an object that is placed on the Interface Surface. Annex B discusses several example methods that a Power Transmitter can use. Some of these methods enable Power Transmitter implementations that use very low stand-by power—if there are no Power Receivers present on the Interface Surface, or if there are Power Receivers present that are not engaged in power transfer.

Annex C discusses a few use cases that deal with locating Power Receivers on the Interface Surface of a type B Power Transmitter. In particular, these use cases describe how to find the optimum location for the Active Area—through which the Power Transmitter provides power to the Power Receiver—and how to distinguish between multiple closely spaced Power Receivers.

Finally, Annex D discusses how a Power Transmitter should detect the presence of foreign objects on the Interface Surface, which are sufficiently close to the Active Area to interfere with the power transfer. Typical examples of such foreign objects are parasitic metals such as coins, keys, paperclips, etc. If a parasitic metal is close to the Active Area it could heat up during power transfer due to eddy currents that result from the oscillating magnetic field. In order to prevent unsafe situations from developing, the Power Transmitter should abort the power transfer, before the temperature of the parasitic metal rises to unacceptable levels.

This page is intentionally left blank.

 © Wireless Power Consortium, October 2010

3 Basic Power Transmitter Designs

3.1 Introduction

The Power Transmitter designs, which this version 1.0.1 of the System Description Wireless Power Transfer, Volume I, Part 1, defines, are grouped in two basic types.

Type A Power Transmitter designs have a single Primary Coil—and a single Primary Cell, which coincides with the Primary Coil. In addition, type A Power Transmitter designs include means to realize proper alignment of the Primary Coil and Secondary Coil. Depending on this means, a type A Power Transmitter enables either Guided Positioning or Free Positioning.

Type B Power Transmitter designs have an array of Primary Coils. All type B Power Transmitters enable Free Positioning. For that purpose, type B Power Transmitters can combine one or more Primary Coils from the array to realize a Primary Cell at different positions across the Interface Surface.

A Power Transmitter serves a single Power Receiver at a time only. However, a Base Station may contain several Power Transmitters in order to serve multiple Mobile Devices simultaneously. Note that multiple type B Power Transmitters may share (parts of) the multiplexer and array of Primary Coils (see Section 3.3.1.3).

3.2 Power Transmitter designs that are based on a single Primary Coil

This Section 3.2 defines all type A Power Transmitter designs. In addition to the definitions in this Section 3.2, each Power Transmitter design shall implement the relevant parts of the protocols defined in Section 5, as well as the communications interface defined in Section 6.

3.2.1 Power Transmitter design A1

Power Transmitter design A1 enables Guided Positioning. Figure 3-1 illustrates the functional block diagram of this design, which consists of two major functional units, namely a Power Conversion Unit and a Communications and Control Unit.

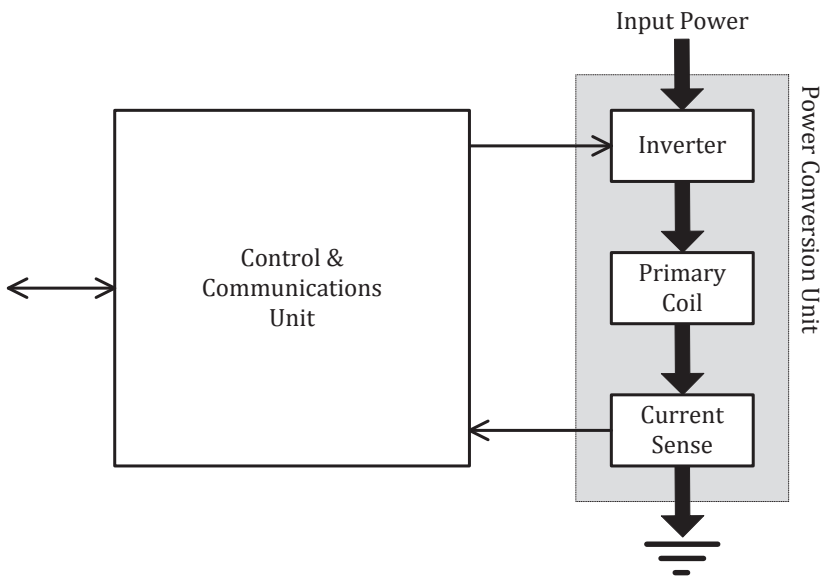

Figure 3-1: Functional block diagram of Power Transmitter design A1

The Power Conversion Unit on the right-hand side of Figure 3-1 comprises the analog parts of the design. The inverter converts the DC input to an AC waveform that drives a resonant circuit, which consists of the Primary Coil plus a series capacitor. Finally, the current sense monitors the Primary Coil current.

The Communications and Control Unit on the left-hand side of Figure 3-1 comprises the digital logic part of the design. This unit receives and decodes messages from the Power Receiver, executes the relevant power control algorithms and protocols, and drives the frequency of the AC waveform to control the power transfer. The Communications and Control Unit also interfaces with other subsystems of the Base Station, e.g. for user interface purposes.

3.2.1.1 Mechanical details

Power Transmitter design A1 includes a single Primary Coil as defined in Section 3.2.1.1.1, Shielding as defined in Section 3.2.1.1.2, an Interface Surface as defined in Section 3.2.1.1.3, and an alignment aid as defined in Section 3.2.1.1.4.

3.2.1.1.1 Primary Coil

The Primary Coil is of the wire-wound type, and consists of no. 20 AWG (0.81 mm diameter) type 2 litz wire having 105 strands of no. 40 AWG (0.08 mm diameter), or equivalent. As shown in Figure 3-2, the Primary Coil has a circular shape and consists of multiple layers. All layers are stacked with the same polarity. Table 3-1 lists the dimensions of the Primary Coil.

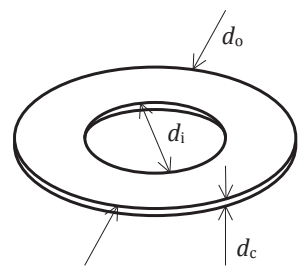

Figure 3-2: Primary Coil of Power Transmitter design A1

Table 3-1: Primary Coil parameters of Power Transmitter design A1

Parameter	Symbol	Value
Outer diameter	d_o	$43^{\pm 0.5}$ mm
Inner diameter	d_i	$20.5^{\pm 0.5}$ mm
Thickness	d_c	$2.1^{+0.5}$ mm
Number of turns per layer	N	10
Number of layers	–	2

3.2.1.1.2 Shielding

As shown in Figure 3-3, soft-magnetic material protects the Base Station from the magnetic field that is generated in the Primary Coil. The Shielding extends to at least 2 mm beyond the outer diameter of the Primary Coil, has a thickness of at least 0.5 mm, and is placed below the Primary Coil at a distance of at most $d_s = 1.0$ mm. This version 1.0.1 of the System Description Wireless Power Transfer, Volume I, Part 1, limits the composition of the Shielding to a choice from the following list of materials:

- Material 44 — Fair Rite Corporation.
- Material 28 — Steward, Inc.
- CMG22G — Ceramic Magnetics, Inc.

 © Wireless Power Consortium, October 2010

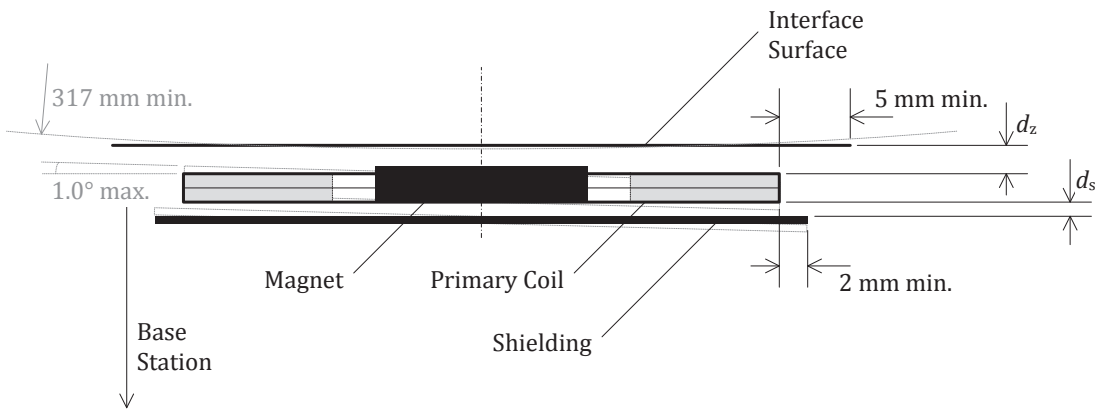

Figure 3-3: Primary Coil assembly of Power Transmitter design A1

3.2.1.1.3 Interface Surface

As shown in Figure 3-3, the distance from the Primary Coil to the Interface Surface of the Base Station is $d_z = 2^{+0.5}_{-0.25}$ mm, across the top face of the Primary Coil. In addition, the Interface Surface of the Base Station extends at least 5 mm beyond the outer diameter of the Primary Coil. (Informative) *This Primary-Coil-to-Interface-Surface distance implies that the tilt angle between the Primary Coil and a flat Interface Surface is at most 1.0°. Alternatively, in case of a non-flat Interface Surface, this Primary-Coil-to-Interface-Surface distance implies a radius of curvature of the Interface Surface of at least 317 mm, centered on the Primary Coil. See also Figure 3-3.*

3.2.1.1.4 Alignment aid

Power Transmitter design A1 employs a disc shaped bonded Neodymium magnet, which a Power Receiver design can exploit to provide an effective alignment means (see Section 4.2.1.2). As shown in Figure 3-3, the magnet is centered within the Primary Coil, and has its north pole oriented towards the Interface Surface. The (static) magnetic flux density due to the magnet, as measured across the Base Station's Interface Surface, has a maximum of 100^{+50}_{-25} mT. The diameter of the magnet is at most 15.5 mm.

3.2.1.1.5 Inter coil separation

If the Base Station contains multiple type A1 Power Transmitters, the Primary Coils of any pair of those Power Transmitters shall have a center-to-center distance of at least 50 mm.

3.2.1.2 Electrical details

As shown in Figure 3-4, Power Transmitter design A1 uses a half-bridge inverter to drive the Primary Coil and a series capacitance. Within the Operating Frequency range specified below, the assembly of Primary Coil, Shielding, and magnet has a self inductance $L_P = 24^{\pm 10\%}$ µH. The value of the series capacitance is $C_P = 100^{\pm 5\%}$ nF. The input voltage to the half-bridge inverter is $19^{\pm 1}$ V. (Informative) *Near resonance, the voltage developed across the series capacitance can reach levels exceeding 200 V pk-pk.*

Power Transmitter design A1 uses the Operating Frequency and duty cycle of the Power Signal in order to control the amount of power that is transferred. For this purpose, the Operating Frequency range of the half-bridge inverter is $f_{op} = 110 \ldots 205$ kHz with a duty cycle of 50%; and its duty cycle range is 10…50% at an Operating Frequency of 205 kHz. A higher Operating Frequency or lower duty cycle result in the transfer of a lower amount of power. In order to achieve a sufficiently accurate adjustment of the amount of power that is transferred, a type A1 Power Transmitter shall control the Operating Frequency with a resolution of

- $0.01 \times f_{op} - 0.7$ kHz, for f_{op} in the 110…175 kHz range;
- $0.015 \times f_{op} - 1.58$ kHz, for f_{op} in the 175…205 kHz range;

or better. In addition, a type A1 Power Transmitter shall control the duty cycle of the Power Signal with a resolution of 0.1% or better.

When a type A1 Power Transmitter first applies a Power Signal (Digital Ping; see Section 5.2.1), it shall use an initial Operating Frequency of 175 kHz (and a duty cycle of 50%).

Control of the power transfer shall proceed using the PID algorithm, which is defined in Section 5.2.3.1. The controlled variable $v^{(i)}$ introduced in the definition of that algorithm represents the Operating Frequency. In order to guarantee sufficiently accurate power control, a type A1 Power Transmitter shall determine the amplitude of the Primary Cell current—which is equal to the Primary Coil current—with a resolution of 7 mA or better. Finally, Table 3-2, Table 3-3, and Table 3-4 provide the values of several parameters, which are used in the PID algorithm.

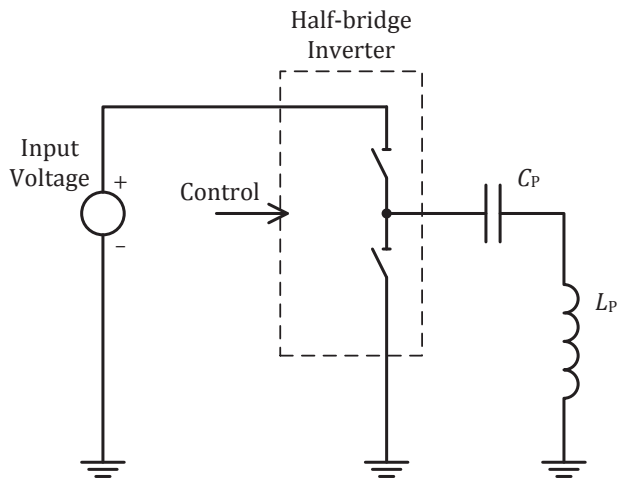

Figure 3-4: Electrical diagram (outline) of Power Transmitter design A1

Table 3-2: PID parameters for Operating Frequency control

Parameter	Symbol	Value	Unit
Proportional gain	K_p	10	mA^{-1}
Integral gain	K_i	0.05	$mA^{-1}ms^{-1}$
Derivative gain	K_d	0	$mA^{-1}ms$
Integral term limit	M_I	3,000	N.A.
PID output limit	M_{PID}	20,000	N.A.

Table 3-3: Operating Frequency dependent scaling factor

Frequency Range [kHz]	Scaling Factor S_v [Hz]
110…140	1.5
140…160	2
160…180	3
180…205	5

 © Wireless Power Consortium, October 2010

Table 3-4: PID parameters for duty cycle control

Parameter	Symbol	Value	Unit
Proportional gain	K_p	10	mA^{-1}
Integral gain	K_i	0.05	$mA^{-1}ms^{-1}$
Derivative gain	K_d	0	$mA^{-1}ms$
Integral term limit	M_I	3,000	N.A.
PID output limit	M_{PID}	20,000	N.A.
Scaling factor	S_v	–0.01	%

3.2.2 Power Transmitter design A2

Power Transmitter design A2 enables Free Positioning. Figure 3-5 illustrates the functional block diagram of this design, which consists of three major functional units, namely a Power Conversion Unit, a Detection Unit, and a Communications and Control Unit.

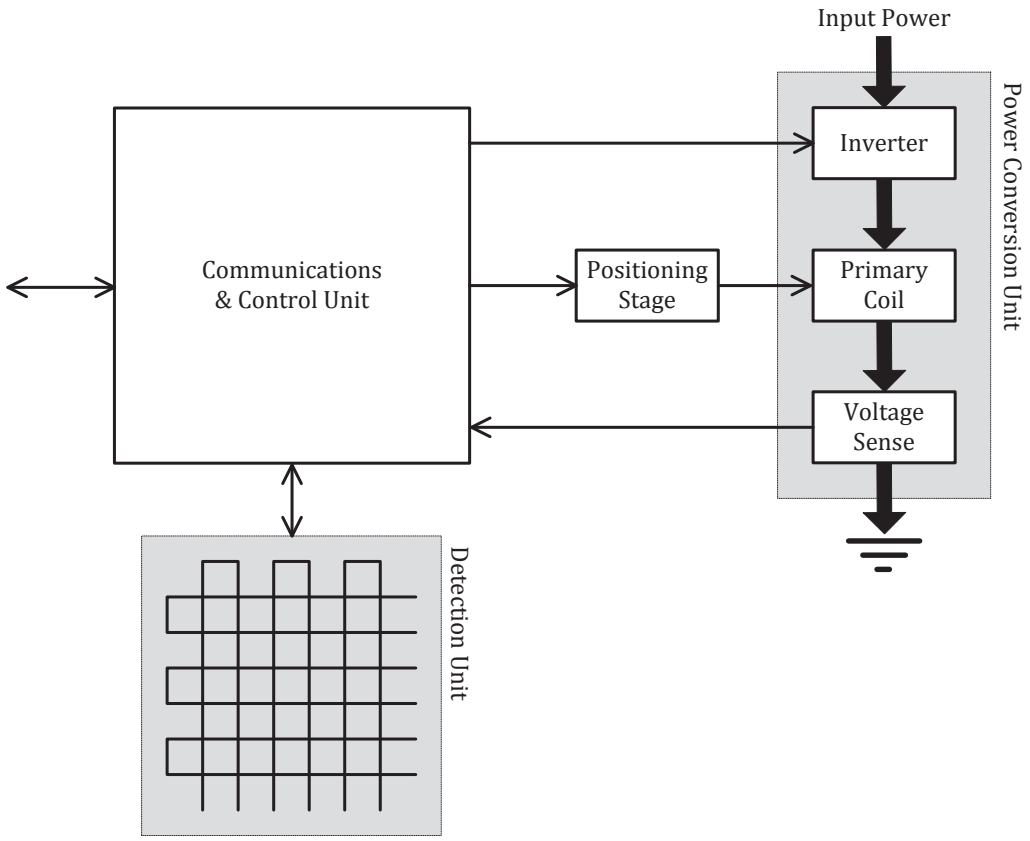

Figure 3-5: Functional block diagram of Power Transmitter design A2

The Power Conversion Unit on the right-hand side of Figure 3-5 and the Detection Unit of the bottom of Figure 3-5 comprise the analog parts of the design. The Power Conversion Unit is similar to the Power Conversion Unit of Power Transmitter design A1. The inverter converts the DC input to an AC waveform that drives a resonant circuit, which consists of the Primary Coil plus a series capacitor. The Primary Coil is mounted on a positioning stage to enable accurate alignment of the Primary Coil to the Active Area of the Mobile Device. Finally, the voltage sense monitors the Primary Coil voltage.

The Communications and Control Unit on the left-hand side of Figure 3-5 comprises the digital logic part of the design. This unit is similar to the Communications and Control Unit of Power Transmitter design A1. The Commnuications and Control Unit receives and decodes messages from the Power Receiver, executes the relevant power control algorithms and protocols, and drives the input voltage of the AC waveform to control the power transfer. In addition, the Communications and Control Unit drives the positioning stage and operates the Detection Unit. The Communications and Control Unit also interfaces with other subsystems of the Base Station, e.g. for user interface purposes.

The Detection Unit determines the approximate location of objects and/or Power Receivers on the Interface Surface. This version 1.0.1 of the System Description Wireless Power Transfer, Volume I, Part 1, does not specify a particular detection method. However, it is recommended that the Detection Unit exploits the resonance in the Power Receiver at the detection frequency f_d (see Section 4.2.2.1). The

 © Wireless Power Consortium, October 2010

reason is that this approach minimizes movements of the Primary Coil, because the Power Transmitter does not need to attempt to identify objects that do not respond at this resonant frequency. Annex C.3 provides an example resonant detection method.

3.2.2.1 Mechanical details

Power Transmitter design A2 includes a single Primary Coil as defined in Section 3.2.2.1.1, Shielding as defined in Section 3.2.2.1.2, an Interface Surface as defined in Section 3.2.2.1.3, and a positioning stage as defined in Section 3.2.2.1.4.

3.2.2.1.1 Primary Coil

The Primary Coil is of the wire-wound type, and consists of litz wire having 30 strands of 0.1 mm diameter, or equivalent. As shown in Figure 3-6, the Primary Coil has a circular shape and consists of multiple layers. All layers are stacked with the same polarity. Table 3-5 lists the dimensions of the Primary Coil.

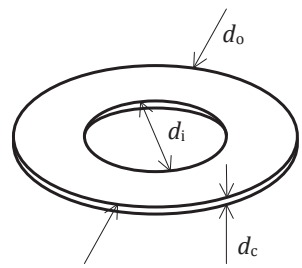

Figure 3-6: Primary Coil of Power Transmitter design A2

Table 3-5: Primary Coil parameters of Power Transmitter design A2

Parameter	Symbol	Value
Outer diameter	d_o	$40^{\pm 1}$ mm
Inner diameter	d_i	$19^{\pm 1}$ mm
Thickness	d_c	$2^{+0.2}$ mm
Number of turns per layer	N	10
Number of layers	–	2

3.2.2.1.2 Shielding

As shown in Figure 3-7, soft-magnetic material protects the Base Station from the magnetic field that is generated in the Primary Coil. The Shielding extends to at least 2 mm beyond the outer diameter of the Primary Coil, has a thickness of at least 0.20 mm and is placed below the Primary Coil at a distance of at most $d_s = 0.1$ mm. This version 1.0.1 of the System Description Wireless Power Transfer, Volume I, Part 1, limits the composition of the Shielding to a choice from the following list of materials:

- DPR-MF3 — Daido Steel
- HS13-H — Daido Steel

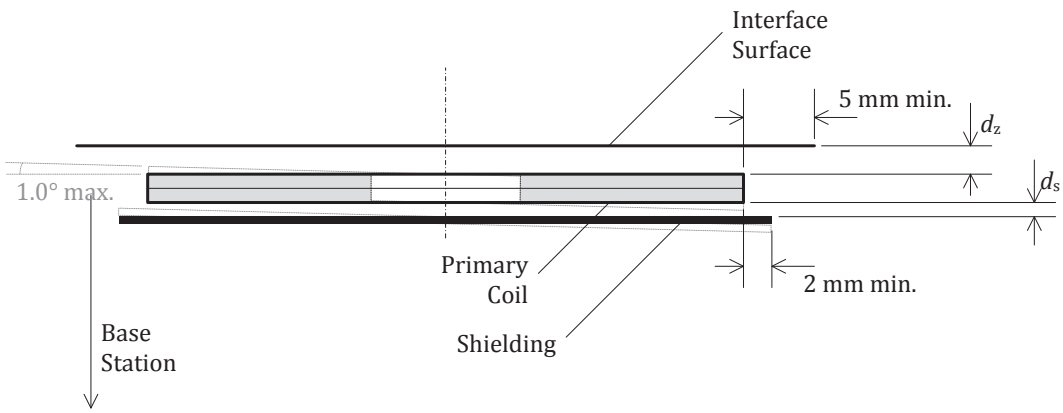

Figure 3-7: Primary Coil assembly of Power Transmitter design A2

3.2.2.1.3 Interface Surface

As shown in Figure 3-7, the distance from the Primary Coil to the Interface Surface of the Base Station is $d_z = 2.5^{+0.5}_{-0}$ mm, across the top face of the Primary Coil. In addition, the Interface Surface of the Base Station extends at least 5 mm beyond the outer diameter of the Primary Coil.

3.2.2.1.4 Positioning stage

The positioning stage shall have a resolution of 0.1 mm or better in each of the two orthogonal directions parallel to the Interface Surface.

3.2.2.2 Electrical details

As shown in Figure 3-8, Power Transmitter design A2 uses a full-bridge inverter to drive the Primary Coil and a series capacitance. At the fixed Operating Frequency of 140 kHz, the assembly of Primary Coil and Shielding has a self inductance $L_P = 24^{\pm 1}$ µH. The value of the series capacitance is $C_P = 200^{\pm 5\%}$ nF. (Informative) *Near resonance, the voltage developed across the series capacitance can reach levels up to 50 V pk-pk.*

Power Transmitter design A2 uses the input voltage to the full-bridge inverter to control the amount of power that is transferred. For this purpose, the input voltage range is 3…12 V, where a lower input voltage results in the transfer of a lower amount of power. In order to achieve a sufficiently accurate adjustment of the power that is transferred, a type A2 Power Transmitter shall be able to control the input voltage with a resolution of 50 mV or better.

When a type A2 Power Transmitter first applies a Power Signal (Digital Ping; see Section 5.2.1), it shall use an initial input voltage of 8 V.

 © Wireless Power Consortium, October 2010

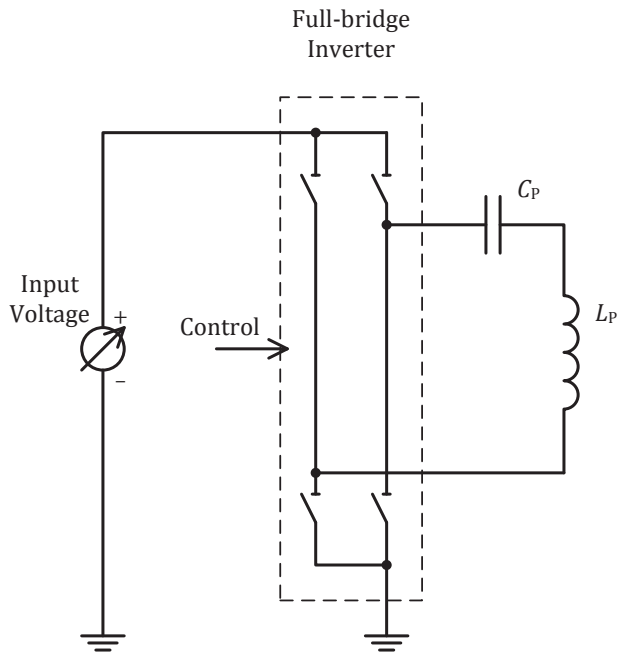

Figure 3-8: Electrical diagram (outline) of Power Transmitter design A2

Control of the power transfer shall proceed using the PID algorithm, which is defined in Section 5.2.3.1. The controlled variable $v^{(i)}$ introduced in the definition of that algorithm represents the input voltage to the full-bridge inverter. In order to guarantee sufficiently accurate power control, a type A2 Power Transmitter shall determine the amplitude of the Primary Cell voltage—which is equal to the Primary Coil voltage—with a resolution of 5 mV or better. Finally, Table 3-6 provides the values of several parameters, which are used in the PID algorithm.

Table 3-6: PID parameters for voltage control

Parameter	Symbol	Value	Unit
Proportional gain	K_p	1	mA^{-1}
Integral gain	K_i	0	$mA^{-1}ms^{-1}$
Derivative gain	K_d	0	$mA^{-1}ms$
Integral term limit	M_I	N.A.	N.A.
PID output limit	M_{PID}	1,500	N.A.
Scaling factor	S_v	–0.5	mV

3.3 Power Transmitter designs that are based on an array of Primary Coils

This Section 3.3 defines all type B Power Transmitter designs. In addition to the definitions in this Section 3.3, each Power Transmitter design shall implement the relevant parts of the protocols defined in Section 5, as well as the communications interface defined in Section 6.

3.3.1 Power Transmitter design B1

Power Transmitter design B1 enables Free Positioning. Figure 3-9 illustrates the functional block diagram of this design, which consists of two major functional units, namely a Power Conversion Unit and a Communications and Control Unit.

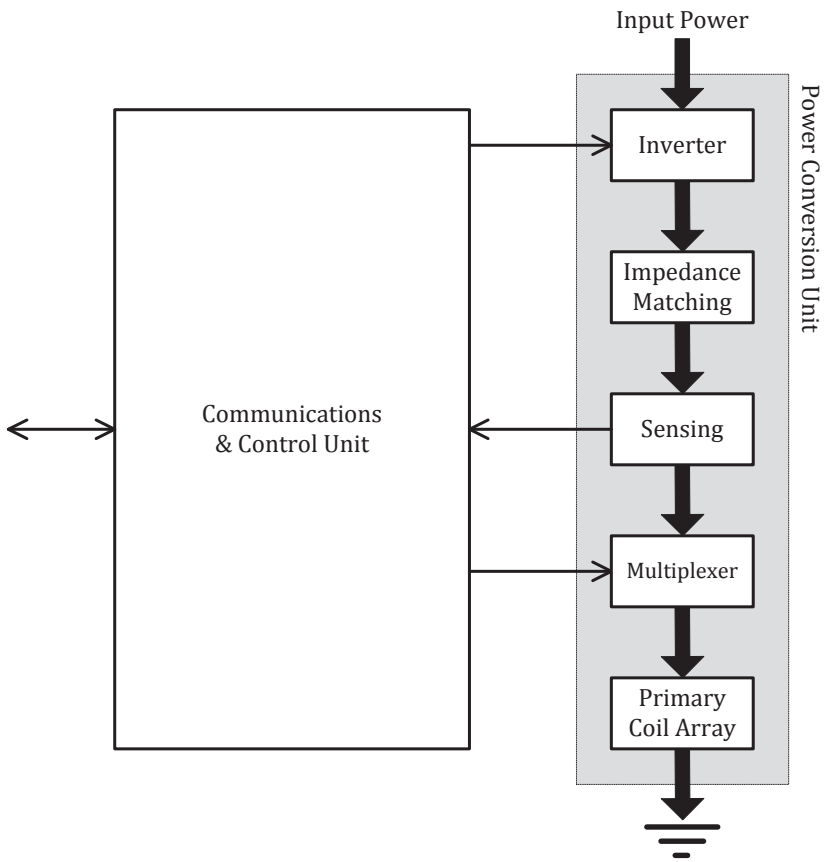

Figure 3-9: Functional block diagram of Power Transmitter design B1

The Power Conversion Unit on the right-hand side of Figure 3-9 comprises the analog parts of the design. The design uses an array of partly overlapping Primary Coils to provide for Free Positioning. Depending on the position of the Power Receiver, the multiplexer connects and/or disconnects the appropriate Primary Coils. The impedance matching network forms a resonant circuit with the parts of the Primary Coil array that are connected. The sensing circuits monitor (amongst others) the Primary Cell current and voltage, and the inverter converts the DC input to an AC waveform that drives the Primary Coil array.

The Communications and Control Unit on the left-hand side of Figure 3-9 comprises the digital logic part of the design. This unit receives and decodes messages from the Power Receiver, configures the multiplexer to connect the appropriate parts of the Primary Coil array, executes the relevant power control algorithms and protocols, and drives the frequency and input voltage to the inverter to control the amount of power provided to the Power Receiver. The Communications and Control Unit also interfaces with the other subsystems of the Base Station, e.g. for user interface purposes.

 © Wireless Power Consortium, October 2010

3.3.1.1 Mechanical details

Power Transmitter design B1 includes a Primary Coil array as defined in Section 3.3.1.1.1, Shielding as defined in Section 3.3.1.1.2, and an Interface Surface as defined in Section 3.3.1.1.3.

3.3.1.1.1 Primary Coil array

The Primary Coil array consists of 3 layers. Figure 3-10(a) shows a top view of a single Primary Coil, which is of the wire-wound type, and consists of litz wire having 24 strands of no. 40 AWG (0.08 mm diameter), or equivalent.

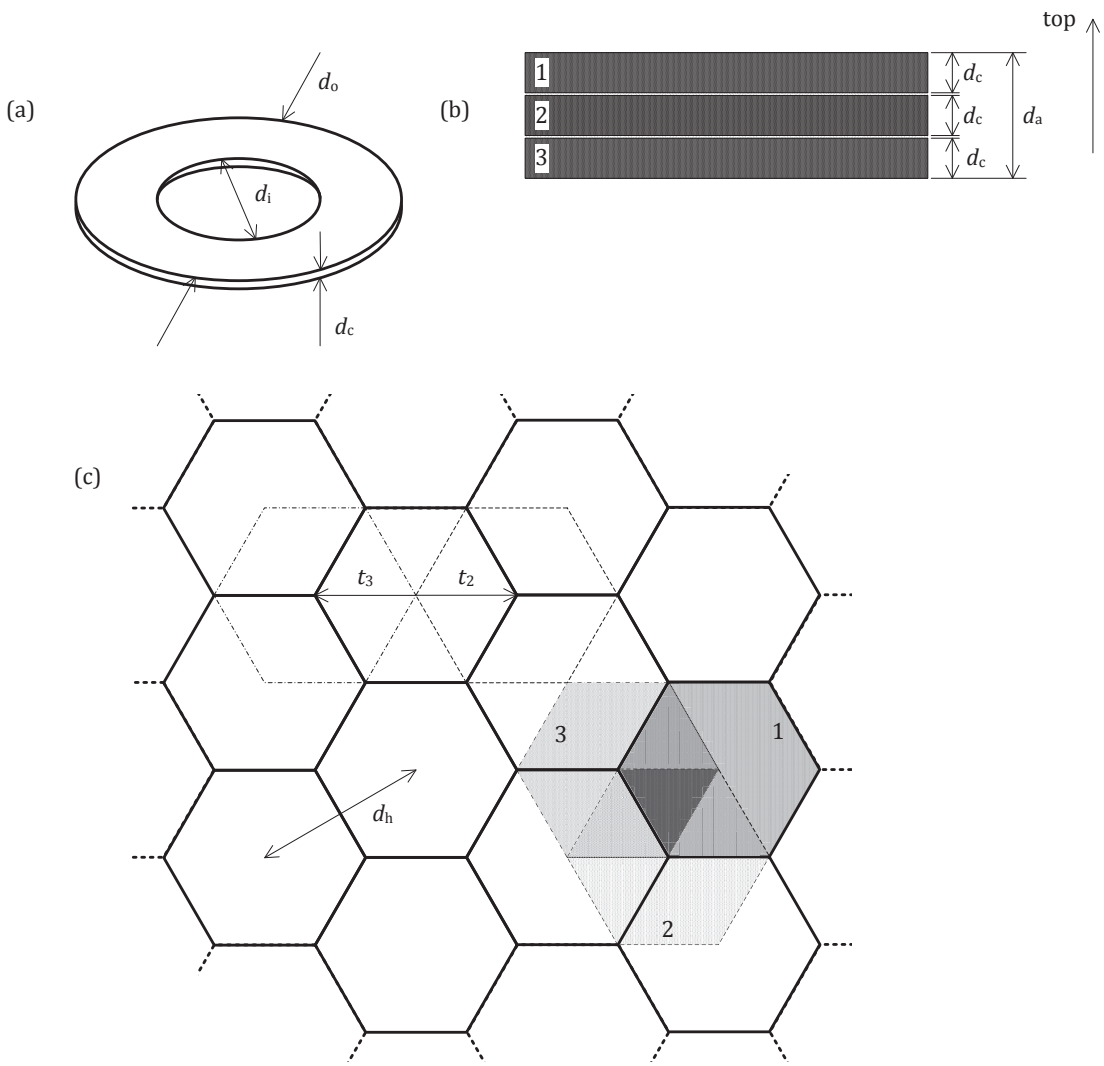

Figure 3-10: Primary Coil array of Power Transmitter design B1

As shown in Figure 3-10(a), the Primary Coil has a circular shape and consists of a single layer. Figure 3-10(b) shows a side view of the layer structure of the Primary Coil array. Figure 3-10(c) provides a top view of the Primary Coil array, showing that the individual Primary Coils are packed in a hexagonal grid. The solid hexagons show the closely packed structure of the grid of Primary Coils on layer 1 of the Primary Coil array. The dashed hexagon illustrates that the grid of Primary Coils on layer 2 is offset over a distance t_2 to the right, such that the centers of the Primary Coils in layer 2 coincide with the corners of

Primary Coils in layer 1. Likewise, the dash-dotted hexagon illustrates that the grid of Primary Coils on layer 3 is offset over a distance t_3 to the left, such that the centers of the Primary Coils in layer 3 coincide with the corners of Primary Coils in layer 1. As a result, the centers, respectively corners, of the Primary Coils on layer 2 and the corners, respectively centers, of the Primary Coils on layer 3 coincide as well. All Primary Coils are stacked with the same polarity. See Section 3.3.1.2 for the meaning of the shaded hexagons.

Table 3-7 lists the relevant parameters of the Primary Coil array.

Table 3-7: Primary Coil array parameters of Power Transmitter design B1

Parameter	Symbol	Value
Outer diameter	d_o	$28.5_{-0.7}$ mm
Inner diameter	d_i	$10.5^{\pm 0.3}$ mm
Layer thickness*	d_c	$0.6^{+0.05}_{-0.1}$ mm
Number of turns	N	16
Array thickness	d_a	$1.9^{+0.3}_{-0.2}$ mm
Center-to-center distance	d_h	28.6^{+1} mm
Offset 2nd layer array	t_2	$16.5^{+0.6}$ mm
Offset 3rd layer array	t_3	$16.5^{+0.6}$ mm

*Value includes thickness of connection wires

3.3.1.1.2 Shielding

As shown in Figure 3-11, Transmitter design B1 employs Shielding to protect the Base Station from the magnetic field that is generated in the Primary Coil array. The Shielding extends to at least 2 mm beyond the outer edges of the Primary Coil array, and is placed at a distance of at most $d_s = 0.5$ mm below the Primary Coil array.

The Shielding consists of soft magnetic material that has a thickness of at least 0.5 mm. This version 1.0.1 of the System Description Wireless Power Transfer, Volume I, Part 1, limits the composition of the Shielding to a choice from the following list of materials:

- Material 78 — Fair Rite Corporation.
- 3C94 — Ferroxcube.
- N87 — Epcos AG.
- PC44 — TDK Corp.

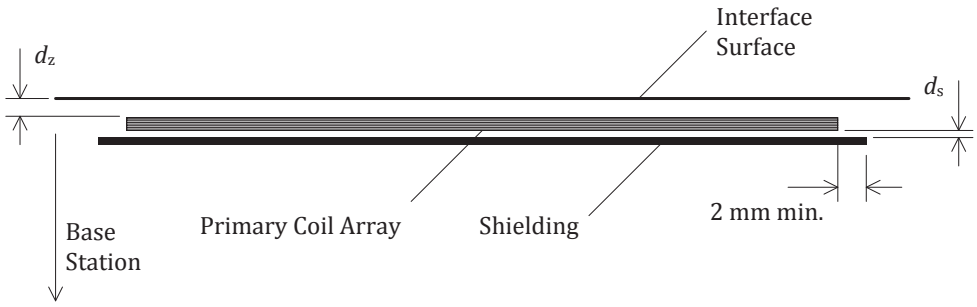

Figure 3-11: Primary Coil array assembly of Power Transmitter design B1

3.3.1.1.3 Interface Surface

As shown in Figure 3-11, the distance from the Primary Coil array to the Interface Surface of the Base Station is $d_z = 2^{+0.5}_{-0.25}$ mm, across the top face of the Primary Coil array. In addition, the Interface Surface extends at least 5 mm beyond the outer edges of the Primary Coil array.

3.3.1.2 Electrical details

As shown in Figure 3-12, Power Transmitter design B1 uses a half-bridge inverter to drive the Primary Coil array. In addition, Power Transmitter design B1 uses a multiplexer to select the position of the Active Area. The multiplexer shall configure the Primary Coil array in such a way that one, two, or three Primary Coils are connected—in parallel—to the driving circuit. The connected Primary Coils together constitute a Primary Cell. As an additional constraint, the multiplexer shall select the Primary Coils such that each selected Primary Coil has an overlap with every other selected Primary Coil; see Figure 3-10(c) for an example.

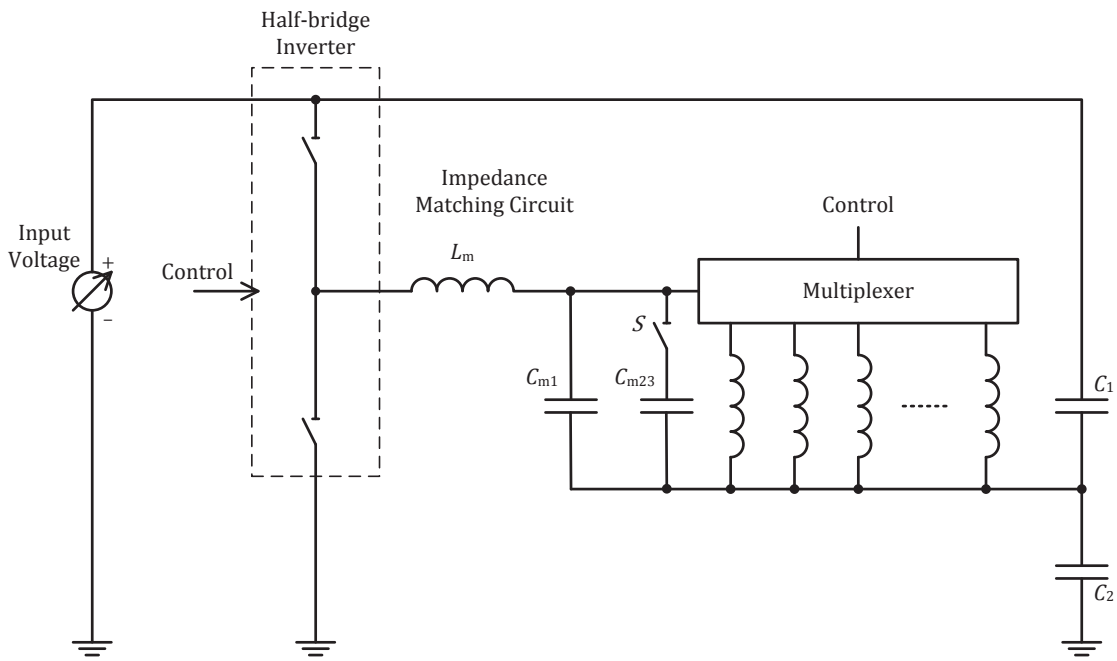

Figure 3-12: Electrical diagram (outline) of Power Transmitter design B1

Within the Operating Frequency range $f_{op} = 105 \ldots 113$ kHz, the assembly of Primary Coil array and Shielding has an inductance of $8.1^{\pm1}$ µH for each individual Primary Coil in layer 1 (closest to the Interface Surface), $8.7^{\pm1}$ µH for each individual Primary Coil in layer 2, and $9.6^{\pm1}$ µH for each individual Primary Coil in layer 3. The capacitances and inductance in the impedance matching circuit are, respectively, $C_{m1} = 300^{\pm5\%}$ nF, $C_{m23} = 200^{\pm5\%}$ nF,and $L_m = 3.8^{\pm5\%}$ µH. The capacitances C_1 and C_2 in the half-bridge inverter both are 68 µF. The switch S is open if the Primary Cell consists of a single Primary Coil; otherwise, the swich S is closed. (Informative) *The voltage across the capacitance C_m can reach levels exceeding 36 V pk-pk.*

Power Transmitter design B1 uses the input voltage to the half-bridge inverter to control the amount of power that is transferred. For this purpose, the input voltage range is 0…20 V, where a lower input voltage results in the transfer of a lower amount of power. In order to achieve a sufficiently accurate adjustment of the power that is transferred, a type B1 Power Transmitter shall be able to control the input voltage with a resolution of 35 mV or better.

When a type B1 Power Transmitter first applies a Power Signal (Digital Ping; see Section 5.2.1), it shall use an initial input voltage of 12 V.

Control of the power transfer shall proceed using the PID algorithm, which is defined in Section 5.2.3.1. The controlled variable $v^{(i)}$ introduced in the definition of that algorithm represents the input voltage to the half-bridge inverter. In order to guarantee sufficiently accurate power control, a type B1 Transmitter shall determine the amplitude of the current into the Primary Cell with a resolution of 5 mA or better. In addition to the PID algorithm, a type B1 Power Transmitter shall limit the current into the Primary Cell to at most 4 A RMS in the case that the Primary Cell consists of two or three Primary Coils, or at most 2 A RMS in the case that the Primary Cell consists of one Primary Coil. For that purpose, the Power Transmitter may limit the input voltage to the half-bridge inverter to value that is lower than 20 V. Finally, Table 3-8 provides the values of several parameters, which are used in the PID algorithm.

Table 3-8: PID parameters for voltage control

Parameter	Symbol	Value	Unit
Proportional gain	K_p	1	mA^{-1}
Integral gain	K_i	0	$\mathrm{mA}^{-1}\mathrm{ms}^{-1}$
Derivative gain	K_d	0	$\mathrm{mA}^{-1}\mathrm{ms}$
Integral term limit	M_I	N.A.	N.A.
PID output limit	M_PID	2,000	N.A.
Scaling factor	S_v	−1	mV

3.3.1.3 Scalability

Sections 3.3.1.1 and 3.3.1.2 define the mechanical and electrical details of Power Transmitter design B1. As defined in Section 3.1, a type B1 Power Transmitter serves a single Power Receiver only. In order to serve multiple Power Receivers simultaneously, a Base Station may contain multiple type B1 Power Transmitters. As shown in Figure 3-13, these Power Transmitters may share the Primary Coil array and multiplexer. However, each individual Power Transmitter shall have a separately controllable inverter, impedance matching circuit, and means to determine the Primary Cell current, as defined in Section 3.3.1.2. In addition, the multiplexer shall ensure that it does not connect multiple inverters to any individual Primary Coil.

 © Wireless Power Consortium, October 2010

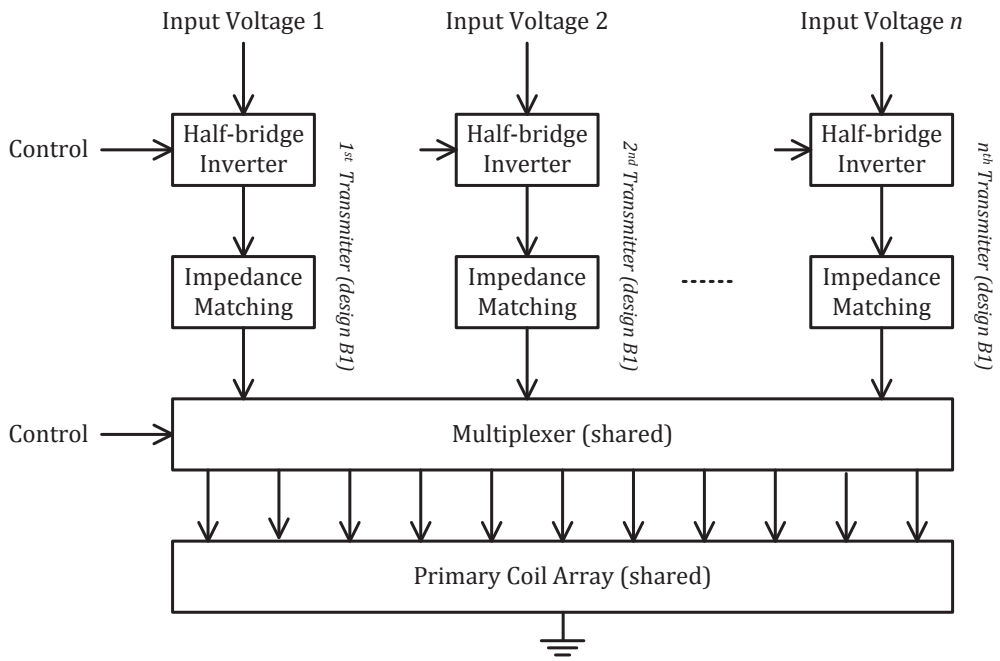

Figure 3-13: Multiple type B1 Power Transmitters sharing a multiplexer and Primary Coil array

3.3.2 Power Transmitter design B2

Power Transmitter design B2 enables Free Positioning. The main difference between Power Transmitter design B2 and Power Transmitter design B1 is the Primary Coil array. Power Transmitter design B2 is based on a Printed Circuit Board (PCB) type Primary Coil array. The functional block diagram of a type B2 Power Transmitter is identical to the functional block diagram of a type B1 Power Transmitter; see Figure 3-9 and the descriptive text in Section 3.3.1.

3.3.2.1 Mechanical details

Power Transmitter design B2 includes a Primary Coil array as defined in Section 3.3.2.1.1, Shielding as defined in Section 3.3.2.1.2, and an Interface Surface as defined in Section 3.3.2.1.3.

3.3.2.1.1 Primary Coil array

The Primary Coil array consists of a 8 layer PCB. The inner six layers of the PCB each contain a grid of Primary Coils, and the bottom layer contains the leads to each of the individual Primary Coils. The top layer can be used for any purpose, but shall not influence the inductance values of the Primary Coils. Figure 3-14(a) shows a top view of a single Primary Coil, which consists of a trace that runs through 18 hexagonal turns. As shown in the top inset of Figure 3-14(a), the corners of this hexagonal shape are rounded. The bottom inset of Figure 3-14(a) shows the width of the trace as well as the distance between two adjacent turns. Figure 3-14(b) shows a side view of the layer structure of the PCB. Copper layers 2, 3, 4, 5, 6, and 7 each contain a grid of Primary Coils. Copper layer 8 contains the leads to each of the Primary Coils. Figure 3-14(c) provides a top view of the Primary Coil array, showing that the individual Primary Coils are packed in a hexagonal grid. The solid hexagons show the closely packed structure of the grids of Primary Coils on layer 2 and layer 7 of the Primary Coil array. Each solid hexagon represents a set of two identical Primary Coils—in this case one Primary Coil on layer 2 and one Primary Coil on layer 7, respectively—which are connected in parallel. The dashed hexagon illustrates that the grids of Primary Coils on layer 3 and layer 6 are offset over a distance t_2 to the right, such that the centers of the Primary Coils in layer 3 and layer 6 coincide with the corners of Primary Coils in layer 2 and layer 7. Likewise, the dash-dotted hexagon illustrates that the grids of Primary Coils on layer 4 and layer 5 are offset over a distance t_3 to the left, such that the centers of the Primary Coils in layer 4 and layer 5 coincide with the corners of Primary Coils in layer 2 and layer7. As a result, the centers, respectively corners, of the Primary Coils on layer 3 and layer 6 and the corners, respectively centers, of the Primary Coils on layer 4 and layer 5 coincide as well. See Section 3.3.2.2 for the meaning of the shaded hexagons.

Table 3-9: Primary Coil array parameters of Power Transmitter design B2

Parameter	Symbol	Value
Outer diameter	d_{o}	$31^{\pm 0.4}$ mm
Track width	d_{w}	$0.42^{\pm 0.03}$ mm
Track width plus spacing	$d_w + d_{\mathrm{s}}$	$0.6^{\pm 0.03}$ mm
Corner rounding*	r_{c}	$5^{\pm 3}$ mm
Number of turns	N	18
Track thickness	d_{Cu}	$0.07^{\pm 0.014}$ mm
Dielectric thickness 1	d_{d1}	$0.089^{+0.15}_{-0}$ mm
Dielectric thickness 2	d_{d2}	$0.1^{\pm 0.013}$ mm
Array thickness	d_{a}	$1.14^{\pm 0.05}$ mm
Center-to-center distance	d_{h}	$31.855^{\pm 0.2}$ mm
Offset 2nd layer array	t_2	$18.4^{\pm 0.1}$ mm
Offset 3rd layer array	t_3	$18.4^{\pm 0.1}$ mm

*Value applies to the outermost winding

 © Wireless Power Consortium, October 2010

Table 3-9 lists the relevant parameters of the Primary Coil array. The finished PCB thickness is $1.3^{\pm 10\%}$ mm.

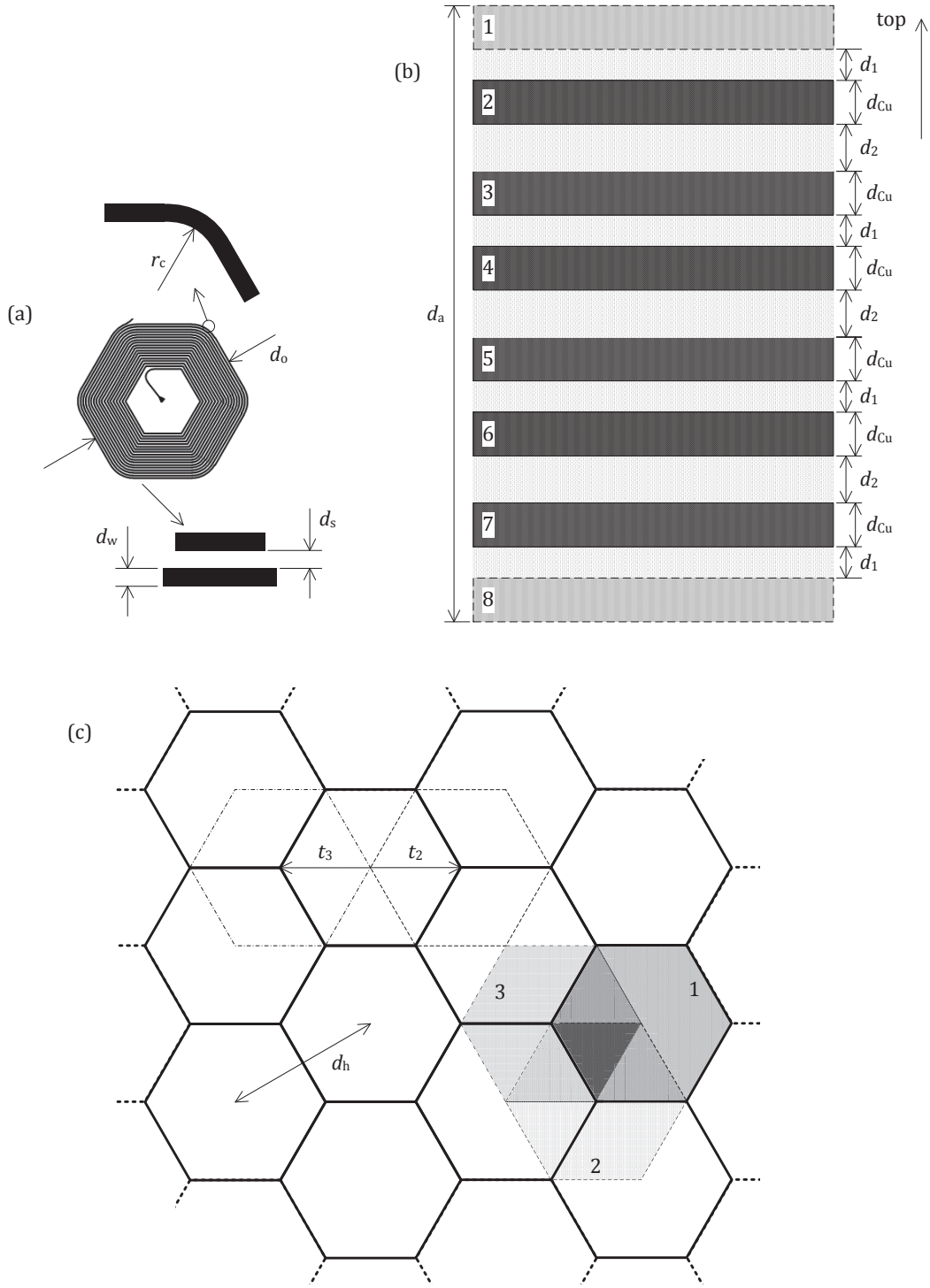

Figure 3-14: Primary Coil array of Power Transmitter design B2

3.3.2.1.2 Shielding

Power Transmitter design B2 employs Shielding that is identical to the Shielding of Power Transmitter design B1. See Section 3.3.1.1.2.

3.3.2.1.3 Interface Surface

The distance from the Primary Coil array to the Interface Surface of the Base Station is $d_z = 2^{+0.1}_{-0.5}$ mm, across the top face of the Primary Coil array. See also Figure 3-11 in Section 3.3.1.1.3. In addition, the Interface Surface extends at least 5 mm beyond the outer edges of the Primary Coil array.

3.3.2.2 Electrical details

The outline of the electrical diagram of Power Transmitter design B2 follows the outline of the electrical diagram of Power Transmitter design B1. See also Figure 3-12 in Section 3.3.1.2.

Power Transmitter design B2 uses a half-bridge inverter to drive the Primary Coil array. In addition, Power Transmitter design B2 uses a multiplexer to select the position of the Active Area. The multiplexer shall configure the Primary Coil array in such a way that one, two, or three sets of two Primary Coils are connected—in parallel—to the driving circuit. The connected Primary Coils together constitute a Primary Cell. As an additional constraint, the multiplexer shall select the Primary Coils such that each selected Primary Coil has an overlap with every other selected Primary Coil; see Figure 3-14(c) for an example.

Within the Operating Frequency range $f_{\mathrm{op}} = 105 \ldots 113$ kHz, the assembly of Primary Coil array and Shielding has an inductance of $11.7^{\pm 1}$ μH for each set of Primary Coils in layer 2 and layer 7 (connected in parallel), $11.8^{\pm 1}$ μH for each set of Primary Coils in layer 3 and layer 6 (connected in parallel), and $12.3^{\pm 1}$ μH for each set of Primary Coils in layer 4 and 5 (connected in parallel). The capacitance and inductance in the impedance matching circuit (Figure 3-12) are, respectively, $C_{\mathrm{m1}} = 256^{\pm 5\%}$ nF, $C_{\mathrm{m23}} = 147^{\pm 5\%}$ nF and $L_{\mathrm{m}} = 3.8^{\pm 5\%}$ μH. The capacitances C_1 and C_2 in the half-bridge inverter both are 68 μF. The switch S is open if the Primary Cell consists of a single Primary Coil; otherwise, the swich S is closed. (Informative) *The voltage across the capacitance C_{m} can reach levels exceeding 36 V pk-pk.*

Power Transmitter design B2 uses the input voltage to the half-bridge inverter to control the amount of power that is transferred. For this purpose, the input voltage range is 0…20 V, where a lower input voltage results in the transfer of a lower amount of power. In order to achieve a sufficiently accurate adjustment of the power that is transferred, a type B2 Power Transmitter shall be able to control the input voltage with a resolution of 35 mV or better.

When a type B2 Power Transmitter first applies a Power Signal (Digital Ping; see Section 5.2.1), it shall use an initial input voltage of 12 V.

Control of the power transfer shall proceed using the PID algorithm, which is defined in Section 5.2.3.1. The controlled variable $v^{(i)}$ introduced in the definition of that algorithm represents the input voltage to the half-bridge inverter. In order to guarantee sufficiently accurate power control, a type B2 Transmitter shall determine the amplitude of the current into the Primary Cell (i.e. the sum of the currents through each of its three constituent Primary Coils) with a resolution of 5 mA or better. In addition to the PID algorithm, a type B2 Power Transmitter shall limit the current into the Primary Cell to at most 3.5 A RMS in the case that the Primary Cell consists of two or three Primary Coils, or at most 1.75 A RMS in the case that the Primary Cell consists of one Primary Coil. For that purpose, the Power Transmitter may limit the input voltage to the half-bridge inverter to value that is lower than 20 V. Finally, Table 3-8 in Section 3.3.1.2 provides the values of several parameters, which are used in the PID algorithm.

3.3.2.3 Scalability

Power Transmitter Design B2 offers the same scalability options as Power Transmitter design B1. See Section 3.3.1.3.

 © Wireless Power Consortium, October 2010

4 Power Receiver Design Requirements

4.1 Introduction

Figure 4-1 illustrates an example functional block diagram of a Power Receiver.

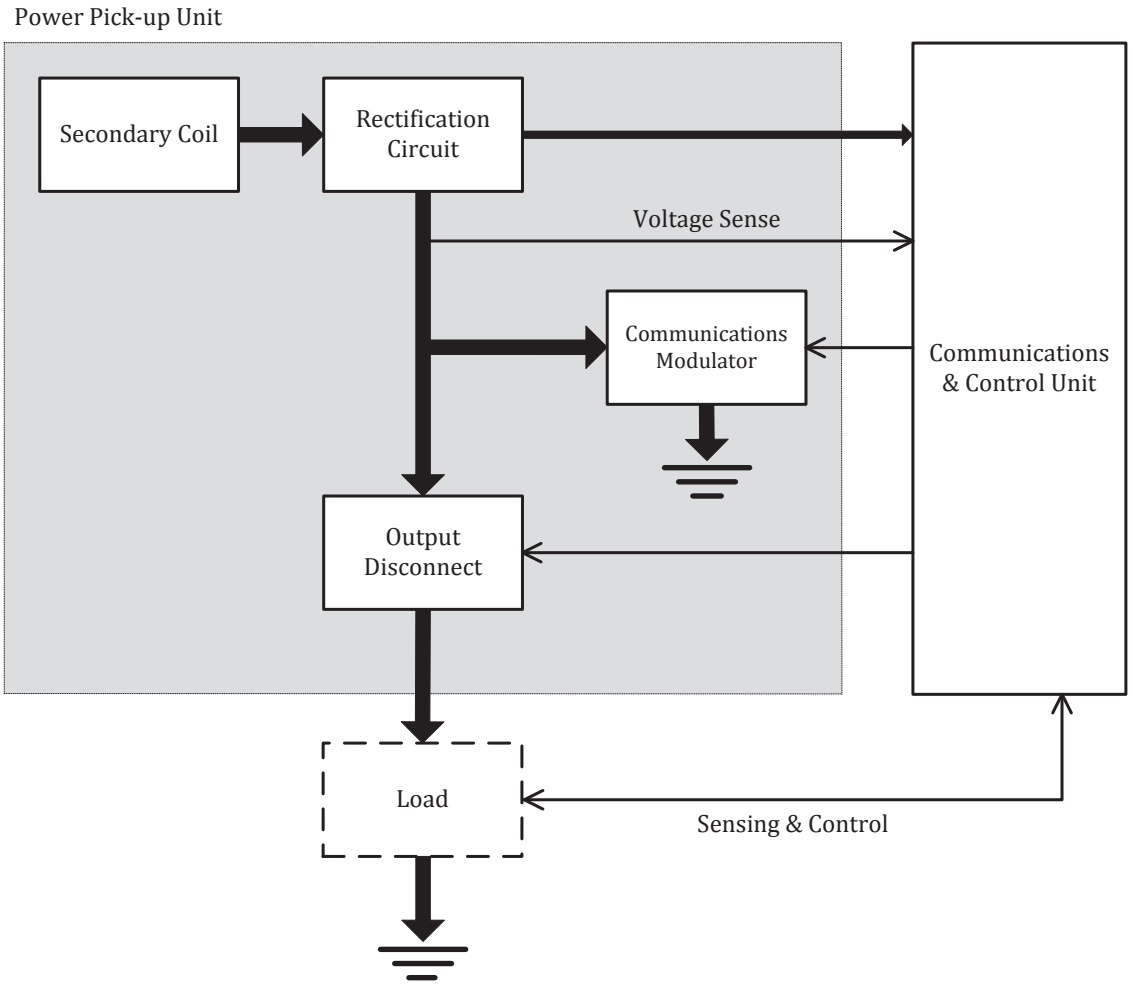

Figure 4-1: Example functional block diagram of a Power Receiver

In this example, the Power Receiver consists of a Power Pick-up Unit and a Communications and Control Unit. The Power Pick-up Unit on the left-hand side of Figure 4-1 comprises the analog components of the Power Receiver:

- A dual resonant circuit consisting of a Secondary Coil plus series and parallel capacitances to enhance the power transfer efficiency and enable a resonant detection method (see Section 4.2.2.1).
- A rectification circuit that provides full-wave rectification of the AC waveform, using e.g. four diodes in a full-bridge configuration, or a suitable configuration of active components (see Section 4.2.2.2). The rectification circuit may perform output smoothing as well. In this example, the rectification circuit provides power to both the Communications and Control Unit of the Power Receiver and the output of the Power Receiver

- A communications modulator (see Section 4.2.2.4). On the DC side of the Power Receiver, the communications modulator typically consists of a resistor in series with a switch. On the AC side of the Power Receiver, the communications modulator typically consists of a capacitor in series with a switch (not shown in Figure 4-1).
- An output disconnect switch, which prevents current from flowing to the output when the Power Receiver does not provide power at its output. In addition, the output disconnect switch prevents current back flow into the Power Receiver when the Power Receiver does not provide power at its output. Moreover, the output disconnect switch minimizes the power that the Power Receiver draws from the Power Transmitter when a Power Signal is first applied to the Secondary Coil.
- A rectified voltage sense.

The Communications and Control Unit on the right-hand side of Figure 4-1 comprises the digital logic part of the Power Receiver. This unit executes the relevant power control algorithms and protocols; drives the communications modulator; controls the output disconnect switch; and monitors several sensing circuits, in both the Power Pick-up Unit and the load—a good example of a sensing circuit in the load is a circuit that measures the temperature of, e.g., a rechargeable battery.

Note that this version 1.0.1 of the System Description Wireless Power Transfer, Volume I, Part 1, minimizes the set of Power Receiver design requirements (see Section 4.2). Accordingly, compliant Power Receiver designs that differ from the example functional block diagram shown in Figure 4-1 are possible. For example, an alternative design includes post-regulation of the output of the rectification circuit (e.g., using a buck converter, battery charging circuit, power management unit, etc.). In yet another design, the Communications and Control Unit interfaces with other subsystems of the Mobile Device, e.g. for user interface purposes.

4.2 Power Receiver design requirements

The design of a Power Receiver shall comply with the mechanical requirements listed in Section 4.2.1 and the electrical requirements listed in Section 4.2.2. In addition, a Power Receiver shall implement the relevant parts of the protocols defined in Section 5, as well as the communications interface defined in Section 6.

4.2.1 Mechanical requirements

A Power Receiver design shall include a Secondary Coil, and an Interface Surface as defined in Section 4.2.1.1. In addition, a Power Receiver design shall include an alignment aid as defined in Section 4.2.1.2.

4.2.1.1 Interface Surface

The distance from the Secondary Coil to the Interface Surface of the Mobile Device shall not exceed $d_z = 2.5$ mm, across the bottom face of the Secondary Coil. See Figure 4-2.

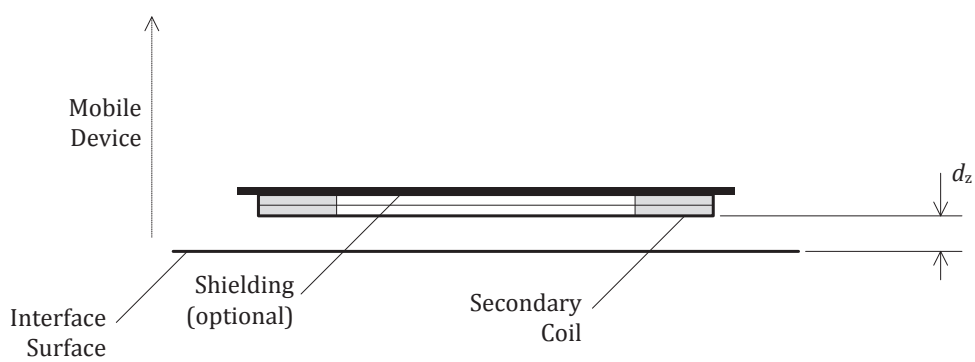

Figure 4-2: Secondary Coil assembly

4.2.1.2 Alignment aid

The design of a Mobile Device shall include means that helps a user to properly align the Secondary Coil of its Power Receiver to the Primary Coil of a Power Transmitter that enables Guided Positioning. This means shall provide the user with directional guidance—i.e. where to the user should move the Mobile Device—as well as alignment indication—i.e. feedback that the user has reached a properly aligned position.[3]

(Informative) *An example of such means is a piece of hard or soft magnetic material, which is attracted to the magnet that is provided in Power Transmitter design A1. The attractive force should provide the user with tactile feedback, when placing the Mobile Device on the Interface Surface. Note that the Mobile Device cannot rely on the presence of any alignment support from the Base Station, other than the alignment aids specified in Section 3.*

4.2.1.3 Shielding

An important consideration for a Power Receiver designer is the impact of the Power Transmitter's magnetic field on the Mobile Device. Stray magnetic fields could interact with the Mobile Device and potentially cause its intended functionality to deteriorate, or cause its temperature to increase due to the power dissipation of generated eddy currents.

It is recommended to limit the impact of magnetic fields by means of Shielding on the top face of the Secondary Coil. See also Figure 4-2. This Shielding should consist of material that has parameters similar to the materials listed in Sections 3.2.1.1.2 and 3.3.1.1.2. The Shielding should cover the Secondary Coil completely. Additional Shielding beyond the outer diameter of the Secondary Coil might be necessary depending upon the impact of stray magnetic fields.

The example Power Receiver designs discussed in Annex A.1 and Annex A.2 both include Shielding.

4.2.2 Electrical requirements

A Receiver design shall include a dual resonant circuit as defined in Section 4.2.2.1, a rectification circuit as defined in Section 4.2.2.2, sensing circuits as defined in Section 4.2.2.3, a communications modulator as defined in Section 4.2.2.4, and an output disconnect switch as defined in Section 4.2.2.5.

4.2.2.1 Dual resonant circuit

The dual resonant circuit of the Power Receiver comprises the Secondary Coil and two resonant capacitances. The purpose of the first resonant capacitance C_S is to enhance the power transfer efficiency. The purpose of the second resonant capacitance C_d is to enable a resonant detection method. Figure 4-3 illustrates the dual resonant circuit. The switch in the dual resonant circuit is optional. If the switch is not present, the capacitance C_d shall have a fixed connection to the Secondary Coil L_S. If the switch is present, it shall remain closed[4] until the Power Receiver transmits its first Packet (see Section 5.3.1).

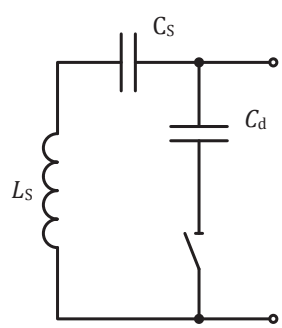

Figure 4-3: Dual resonant circuit of a Power Receiver

[3]The design requirements of the Mobile Device to determine the range of lateral displacements that constitute proper alignment.
[4]The switch shall remain closed even if no power is available from the Secondary Coil.

The dual resonant circuit shall have the following resonant frequencies:

$$f_{\mathrm{S}} = \frac{1}{2\pi \cdot \sqrt{L'_{\mathrm{S}} \cdot C_{\mathrm{S}}}} = 100^{+x}_{-y}\ \mathrm{kHz},$$

$$f_{\mathrm{d}} = \frac{1}{2\pi \cdot \sqrt{L_{\mathrm{S}} \cdot \left(\frac{1}{C_{\mathrm{S}}} + \frac{1}{C_{\mathrm{d}}}\right)^{-1}}} = 1000^{\pm 10\%}\ \mathrm{kHz}.$$

In these equations, L'_{S} is the self inductance of the Secondary Coil when placed on the Interface Surface of a Power Transmitter and—if necessary—aligned to the Primary Cell; and L_{S} is the self inductance of the Secondary Coil without magnetically active material that is not part of the Power Receiver design close to the Secondary Coil (e.g. away from the Interface Surface of a Power Transmitter). Moreover, the tolerances x and y on the resonant frequency f_{S} are $x = y = 5\%$ for Power Receivers that specify a Maximum Power value in the Configuration Packet of 3 W and above, and $x = 5\%$ and $y = 10\%$ for all other Power Receivers. The quality factor Q of the loop consisting of the Secondary Coil, switch (if present), resonant capacitance C_s and resonant capacitance C_d, shall exceed the value 77. Here the quality factor Q is defined as:

$$Q = \frac{2\pi \cdot f_d \cdot L_s}{R}$$

with R the DC resistance of the loop with the capacitances C_{S} and C_{d} short-circuited.

Figure 4-4 shows the environment that is used to determine the self-inductance L'_{S} of the Secondary Coil. The primary Shielding shown in Figure 4-4 consists of material PC44 from TDK Corp. The primary Shielding has a square shape with a side of 50 mm and a thickness of 1 mm. The center of the Secondary Coil and the center of the primary Shielding shall be aligned. The distance from the Receiver Interface Surface to the primary Shielding is $d_{\mathrm{z}} = 3.4$ mm. Shielding on top of the Secondary Coil is present only if the Receiver design includes such Shielding. Other Mobile Device components that influence the inductance of the Secondary Coil shall be present as well when determining the resonant frequencies—the magnetic attractor shown in Figure 4-4 is example of such a component. The excitation signal that is used to determine L_{S} and L'_{S} shall have an amplitude of 1 V RMS and a frequency of 100 kHz.

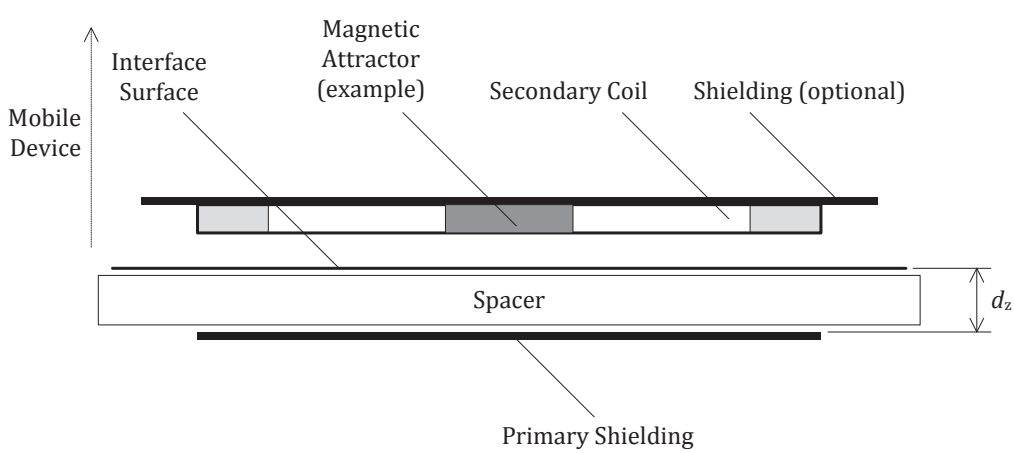

Figure 4-4: Characterization of resonant frequencies

4.2.2.2 Rectification circuit

The rectification circuit shall use full-wave rectification to convert the AC waveform to a DC power level.

4.2.2.3 Sensing circuits

The Power Receiver shall monitor the DC voltage V_{r} directly at the output of the rectification circuit.

4.2.2.4 Communications modulator

The Power Receiver shall have the means to modulate the Primary Cell current and Primary Cell voltage as defined in Section 6.2.1.[5] This version 1.0.1 of the System Description Wireless Power Transfer, Volume I, Part 1, leaves the specific loading method as a design choice to the Power Receiver. Typical example methods include modulation of a resistive load on the DC side of the Power Receiver, and modulation of a capacitive load on the AC side of the Power Receiver.

4.2.2.5 Output disconnect

The Power Receiver shall have the means to disconnect its output from the subsystems connected thereto. If the Power Receiver has disconnected its output, it shall ensure that it still draws a sufficient amount of power from the Power Transmitter, such that Power Receiver to Power Transmitter communications remain possible (see also Section 6.2.1).

The Power Receiver shall keep its output disconnected until it reaches the *power transfer* phase for the first time after a Digital Ping (see also Section 5). Subsequently, the Power Receiver may operate the output disconnect switch any time while the Power Transmitter applies a Power Signal. This also means that the Power Receiver may keep its output connected if it reverts from the *power transfer* phase to the *identification & configuration* phase.

(Informative) *Note that the Power Receiver may experience a voltage peak when operating the output disconnect switch (and changing between maximum and near-zero power dissipation).*

[5](Informative) *Note that the dual resonant circuit as depicted in Figure 4-3 does not prohibit implementation of the communications modulator directly at the Secondary Coil.*

This page is intentionally left blank.

 © Wireless Power Consortium, October 2010

5 System Control

5.1 Introduction

From a system control perspective, power transfer from a Power Transmitter to a Power Receiver comprises four phases, namely *selection, ping, identification & configuration,* and *power transfer*. Figure 5-1 illustrates the relation between the phases. The solid arrows indicate transitions, which the Power Transmitter initiates; and the dash-dotted arrows indicate transitions that the Power Receiver initiates. By definition, if the Power Transmitter is not applying a Power Signal, the sytem is in the *selection* phase. This means that a transition from any of the other phases to the *selection* phase involves the Power Transmitter removing the Power Signal.

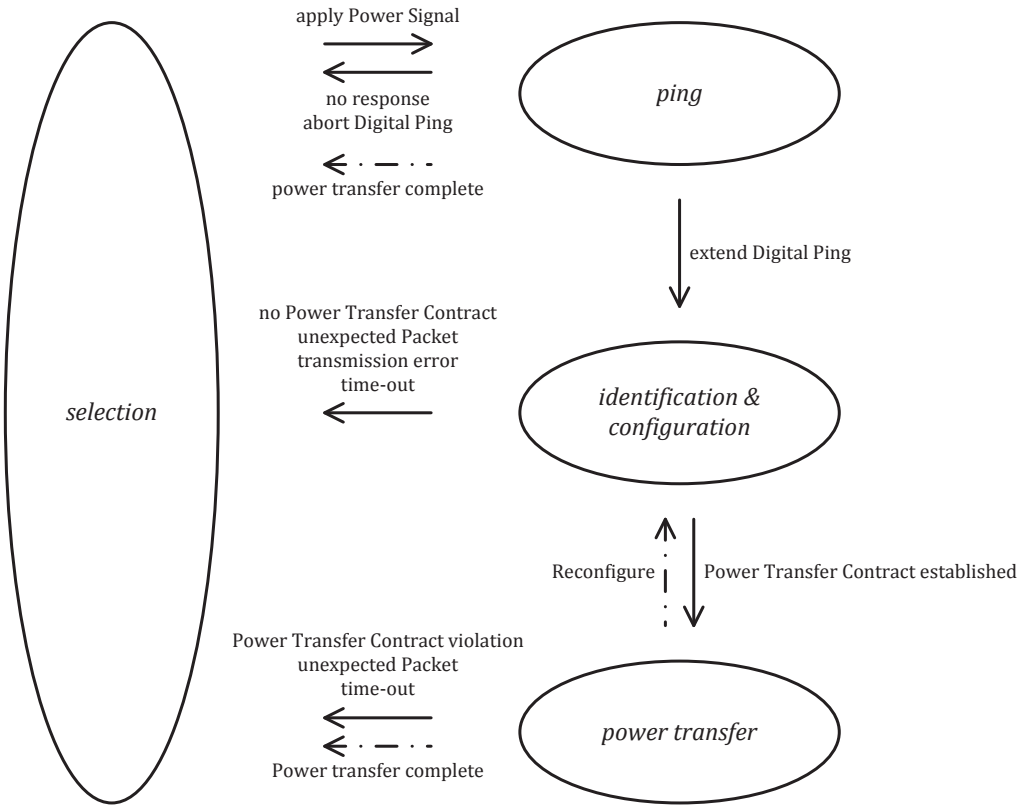

Figure 5-1: Power transfer phases

The main activity in each of these phases is the following:

- *selection* In this phase, the Power Transmitter typically monitors the Interface Surface for the placement and removal of objects. The Power Transmitter may use a variety of methods for this purpose. See Annex B for some examples. If the Power Transmitter discovers one or more objects, it should attempt to locate those objects—in particular if it supports Free Positioning. In addition, the Power Transmitter may attempt to differentiate between Power Receivers and foreign objects—keys, coins, etc. Moreover, the Power Transmitter should attempt to select a Power Receiver for power transfer. If initially the Power Transmitter does not have sufficient information for these purposes, the Power Transmitter may repeatedly proceed to the *ping* and subsequently to the *identification & configuration* phases—each time selecting a different Primary Cell—and revert to the *selection* phase after collecting relevant information. See Annex C for examples. Finally, if the Power Transmitter selects a Primary Cell, which it intends to use for

power transfer to a Power Receiver, the Power Transmitter proceeds to the *ping* phase—and eventually to the *power transfer* phase. On the other hand, if the Power Transmitter does not select a Power Receiver for power transfer—and is not actively providing power to a Power Receiver for an extended amount of time—the Power Transmitter should enter a stand-by mode of operation.[6] See [Part 2] for performance requirements on such a mode of operation.

- *ping* In this phase, the Power Transmitter executes a Digital Ping, and listens for a response. If the Power Transmitter discovers a Power Receiver, the Power Transmitter may extend the Digital Ping, i.e. maintain the Power Signal at the level of the Digital Ping. This causes the system to proceed to the *identification & configuration* phase. If the Power Transmitter does not extend the Digital Ping, the system shall revert to the *selection* phase.
- *identification & configuration* In this phase, the Power Transmitter identifies the selected Power Receiver, and obtains configuration information such as the maximum amount of power that the Power Receiver intends to provide at its output. The Power Transmitter uses this information to create a Power Transfer Contract. This Power Transfer Contract contains limits for several parameters that characterize the power transfer in the *power transfer* phase. At any time before proceeding to the *power transfer* phase, the Power Transmitter may decide to terminate the extended Digital Ping—e.g. to discover additional Power Receivers. This reverts the system to the *selection* phase.
- *power transfer* In this phase, the Power Transmitter continues to provide power to the Power Receiver, adjusting its Primary Cell current in response to control data that it receives from the Power Receiver. Throughout this phase, the Power Transmitter monitors the parameters that are contained in the Power Transfer Contract. A violation of any of the stated limits on any of those parameters causes the Power Transmitter to abort the power transfer—returning the system to the *selection* phase. Finally, the system may also leave the *power transfer* phase on request of the Power Receiver. For example, the Power Receiver can request to terminate the power transfer—battery fully charged—reverting the system to the *selection* phase, or request to renegotiate the Power Transfer Contract—change to trickle charging the battery using a lower maximum amount of power—reverting the system to the *identification & configuration* phase.

Section 5.2 defines the system control protocols in the *ping, identification & configuration,* and *power transfer* phases from a Power Transmitter perspective. Section 5.3 defines the system control protocols in these four phases from a Power Receiver perspective. Note that this version 1.0.1 of the System Description Wireless Power Transfer, Volume I, Part 1, does not define the system control protocol in the *selection* phase. Further note that—from a power transfer point of view—the Power Receiver remains passive throughout most of the *selection* phase.

At any time a user can remove a Mobile Device that is receiving power. The Power Transmitter can recognize such an event from a time-out in the communications from the Power Receiver, or from a violation of the Power Transfer Contract. As a result, the Power Transmitter aborts the power transfer and the system reverts to the *selection* phase.

Throughout the *power transfer* phase, the Power Transmitter and Power Receiver control the amount of power that is transferred. The Figure 5-2 illustrates a schematic diagram of the power transfer control loop, which basically operates as follows: The Power Receiver selects a desired Control Point—a desired output current and/or voltage, a temperature measured somewhere in the Mobile Device, etc. In addition, the Power Receiver determines its actual Control Point. Note that the Power Receiver may use any approach to determine a Control Point. Moreover, the Power Receiver may change this approach at any time during the *power transfer* phase. Using the desired Control Point and actual Control Point, the Power Receiver calculates a Control Error Value—for example simply taking the (relative) difference of the two output voltages or currents—such that the result is negative if the Power Receiver requires less power in order to reach its desired Control Point, and positive if the Power Receiver requires more power in order to reach its desired Control Point. Subsequently, the Power Receiver transmits this Control Error Value to the Power Transmitter.

[6]Note that it is up to the Power Transmitter implementation to determine whether this stand-by mode of operation is part of the *selection* phase or is separate from the *selection* phase.

 © Wireless Power Consortium, October 2010

The Power Transmitter uses the Control Error Value and the actual Primary Cell current to determine a new Primary Cell current. After the system stabilizes from the communications of the Control Error Packet, the Power Transmitter has a short time window to control its actual Primary Cell current towards the new Primary Cell current. Within this window, the Power Transmitter reaches a new Operating Point—the amplitude, frequency, and duty cycle of the AC voltage that is applied to the PrimaryCell. Subsequently, the Power Transmitter keeps its Operating Point fixed in order to enable the Power Receiver to communicate additional control and status information. See Section 5.2.3.1 for details.

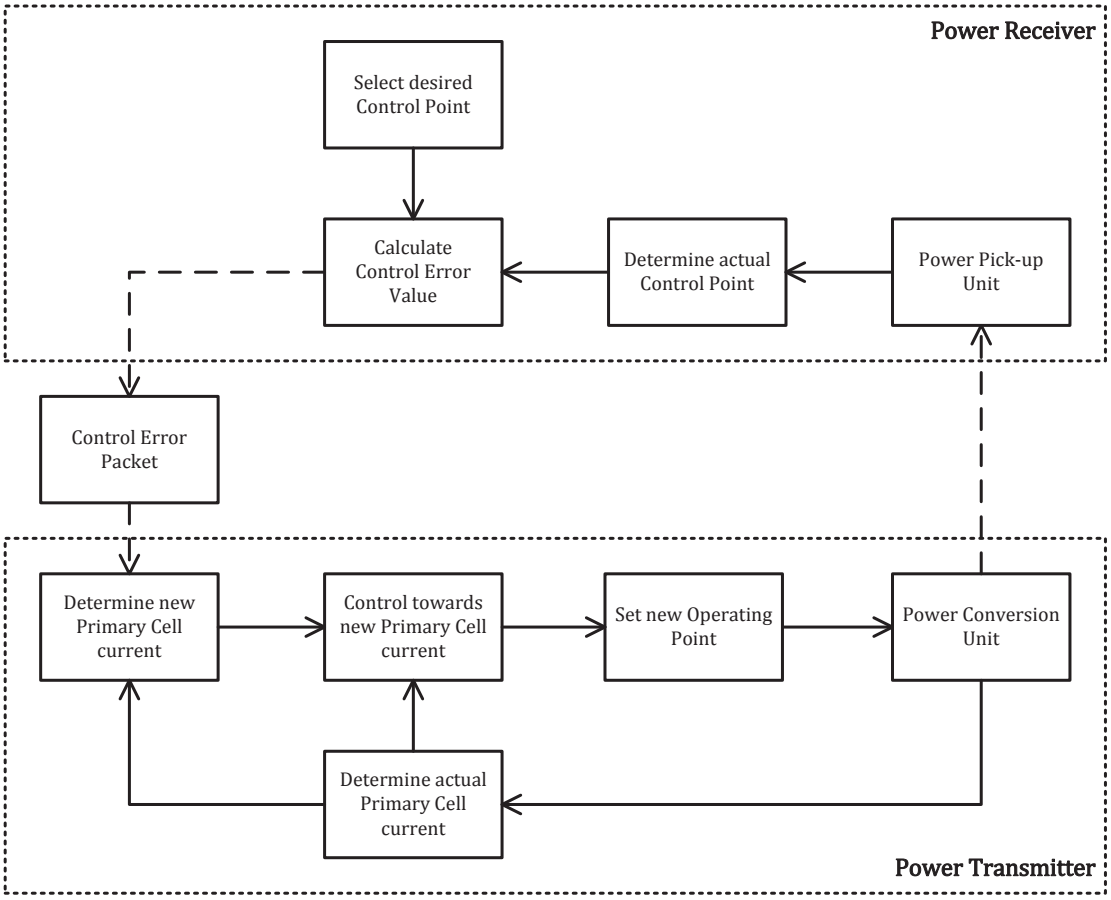

Figure 5-2: Power transfer control loop

5.2 Power Transmitter perspective

Section 5.2.1 defines the protocol that the Power Transmitter shall execute in order to select a Power Receiver for power transfer. This protocol comprises a Digital Ping. Section 5.2.2 defines the protocol that the Power Transmitter shall execute in order to identify the Power Receiver and establish a Power Transfer Contract. This protocol extends the Digital Ping, in order to enable the Power Receiver to communicate the necessary information. Section 5.2.3 defines the protocol that the Power Transmitter shall execute after is has established the Power Transfer Contract. During execution of this protocol, the Power Transmitter controls its Primary Cell current in response to control data that it receives from the Power Receiver.

5.2.1 Ping phase

In the *ping* phase, the Power Transmitter shall execute a Digital Ping. This Digital Ping shall proceed as follows, with conditions appearing earlier in this list take precedence over conditions appearing later:

- The Power Transmitter shall apply a Power Signal at the Operating Point as defined for the particular Power Transmitter design (see Section 3), and attempt to receive an incoming Packet.
- If the Power Transmitter does not detect the start bit of the header byte of the first incoming Packet within t_{ping} ms of first applying the Power Signal, the Power Transmitter shall remove the Power Signal (i.e. reduce the Primary Cell current to zero) within $t_{\text{terminate}}$ ms. See Figure 5-3(a).
- If the Power Transmitter correctly receives a Signal Strength Packet, the Power Transmitter may proceed to the *identification & configuration* phase of the power transfer, maintaining the Power Signal at the Operating Point as defined for the particular Power Transmitter design. See Figure 5-3(b). If the Power Transmitter does not proceed to the *identification & configuration* phase, the Power Transmitter shall remove the Power Signal within t_{expire} ms after receiving the stop bit of the Signal Strength Packet's checksum byte. See Figure 5-3(c).
- If the Power Transmitter does not correctly receive (see Section 6.2.4) the first Packet within t_{first} ms after detecting the start bit of the first incoming Packet, the Power Transmitter shall remove the Power Signal within $t_{\text{terminate}}$ ms. See Figure 5-3(d).
- If the Power Transmitter correctly receives any other Packet than a Signal Strength Packet, and in particular if the Power Transmitter receives an End Power Transfer Packet, the Power Transmitter shall remove the Power Signal within $t_{\text{terminate}}$ ms after receiving the stop bit of the Packet's checksum byte. See Figure 5-3(e).

If the Power Transmitter does not proceed to the *identification & configuration* phase, the Power Transmitter shall revert to the *selection* phase.

Note that the thick line in Figure 5-3 represents the amplitude of the Power Signal, which is zero at the left-hand side of the diagrams. The dashed line represents possible communications from the Power Receiver, which the Power Transmitter shall ignore—as follows from the above conditions.

Table 5-1: Power Transmitter timing in the *ping* phase

Parameter	Symbol	Value	Unit
Maximum Digital Ping duration	t_{ping}	65	ms
Power Signal termination time	$t_{\text{terminate}}$	28	ms
First Packet time out	t_{first}	17	ms
Power Signal expiration time	t_{expire}	28	ms

 © Wireless Power Consortium, October 2010

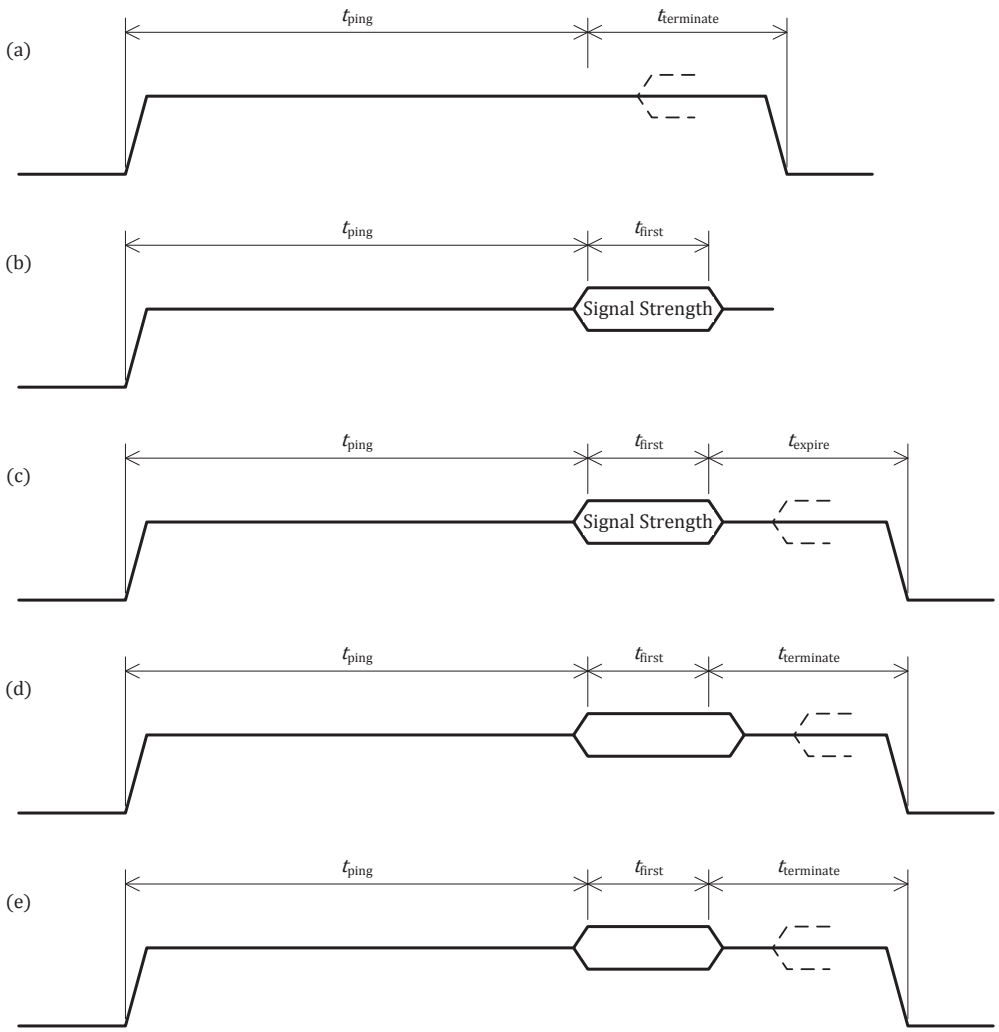

Figure 5-3: Power Transmitter timing in the *ping* phase

5.2.2 Identification & configuration phase

In the *identification & configuration* phase, the Power Transmitter shall identify the Power Receiver and collect configuration information. For this purpose, the Power Transmitter shall correctly receive the following sequence of Packets, in the order shown, and without changing its Operating Point:

- If the Power Transmitter enters the *identification & configuration* phase from the *ping* phase, an Identification Packet.
- If the Ext bit of the preceding Identification Packet is set to ONE, an Extended Identification Packet.
- Up to 7 optional configuration Packets from the following set (the order in which the Power Transmitter receives these Packets, if any, is not relevant):
    - A Power Control Hold-off Packet. If the Power Transmitter receives multiple Power Control Hold-off Packets, the Power Transmitter shall retain the Power Control Hold-off Time t_{delay} contained in the last Power Control Hold-off Packet received (see below).
    - Any Proprietary Packet (as listed in Table 6-3). If the Power Transmitter does not know how to handle the message contained in the Proprietary Packet, the Power Transmitter shall ignore that message.

  - Any reserved Packet (as indicated in Table 6-3). The Power Transmitter shall ignore the message contained in the reserved Packet.

- A Configuration Packet. If the number of optional configuration Packets, which the Power Transmitter has received, is not equal to the value contained in the Count field of the Configuration Packet, the Power Transmitter shall remove the Power Signal within $t_{\text{terminate}}$ ms after receiving the stop bit of the Configuration Packet's checksum byte, and return to the *selection* phase.

The Power Transmitter shall receive the above sequence of Packets subject to the following timing constraints:

- If the Power Transmitter does not detect the start bit of the header byte of a next Packet in the sequence within t_{next} ms after receiving the stop bit of the checksum byte of the directly preceding Packet in the sequence, the Power Transmitter shall remove the Power Signal within $t_{\text{terminate}}$ ms. See Figure 5-4(a). In this context, the directly preceding Packet of the Identification Packet is the Signal Strength Packet, which the Power Transmitter has received in the *ping* phase. In addition, if the Power Transmitter has entered the *identification & configuration* phase from the *power transfer* phase, the directly preceding Packet of the first Packet in the sequence—either the Configuration Packet if the sequence does not contain optional configuration Packets, or the first optional configuration Packet—is the End Power Transfer Packet, which the Power Transmitter has received in the *power transfer* phase.
- If the Power Transmitter does not correctly receive a Packet in the sequence within t_{max} ms after receiving the start bit of the header byte of that Packet, the Power Transmitter shall remove the Power Signal within $t_{\text{terminate}}$ ms. See Figure 5-4(b).
- If the Power Transmitter correctly receives a next Packet that does not comply with the above sequence, the Power Transmitter shall remove the Power Signal within $t_{\text{terminate}}$ ms after receiving the stop bit of that Packet's checksum byte. See Figure 5-4(c).

In addition to these timing constraints, if the Power Transmitter does not receive a Packet correctly (see Section 6.2.4), the Power Transmitter shall remove the Power Signal within $t_{\text{terminate}}$ ms after detecting the error.

After the Power Transmitter has received the Configuration Packet, the Power Transmitter shall execute the following steps, in the order shown:

- If the relation $t_{\text{delay}}^{(\text{min})} \leq t_{\text{delay}} \leq t_{\text{delay}}^{(\text{max})}$ is not satisfied, the Power Transmitter shall revert to the *selection* phase. Moreover, if the Power Transmitter reverts to the *selection* phase, the Power Transmitter shall remove the Power Signal within $t_{\text{terminate}}$ ms after receiving the stop bit of the Configuration Packet's checksum byte. If the Power Transmitter has not received a Power Control Hold-off Packet, the Power Transmitter shall proceed to use $t_{\text{delay}} = t_{\text{delay}}^{(\text{min})}$.
- If the Power Transmitter has correctly received all Packets in the sequence (see Figure 5-4(d)), the Power Transmitter may create a Power Transfer Contract. See below.
- If the Power Transmitter has created a Power Transfer Contract, the Power Transmitter may proceed to the *power transfer* phase. If the Power Transmitter does not proceed to the *power transfer* phase, the Power Transmitter shall remove the Power Signal within t_{expire} ms after receiving the stop bit of the Configuration Packet's checksum byte. See Figure 5-4(e).
- If the Power Transmitter has removed the Power Signal—and does not proceed to the *power transfer* phase—the Power Transmitter shall revert to the *selection* phase.

 © Wireless Power Consortium, October 2010

Table 5-2: Power Transmitter timing in the *identification & configuration* phase

Parameter	Symbol	Value	Unit
Next Packet time out	t_{next}	20	ms
Maximum Packet length	t_{max}	170	ms

Table 5-3: Power control hold-off time

Parameter	Symbol	Value	Unit
Power Control Hold-off Time	$t_{\text{delay}}^{(\text{min})}$	5	ms
Power Control Hold-off Time	$t_{\text{delay}}^{(\text{max})}$	205	ms

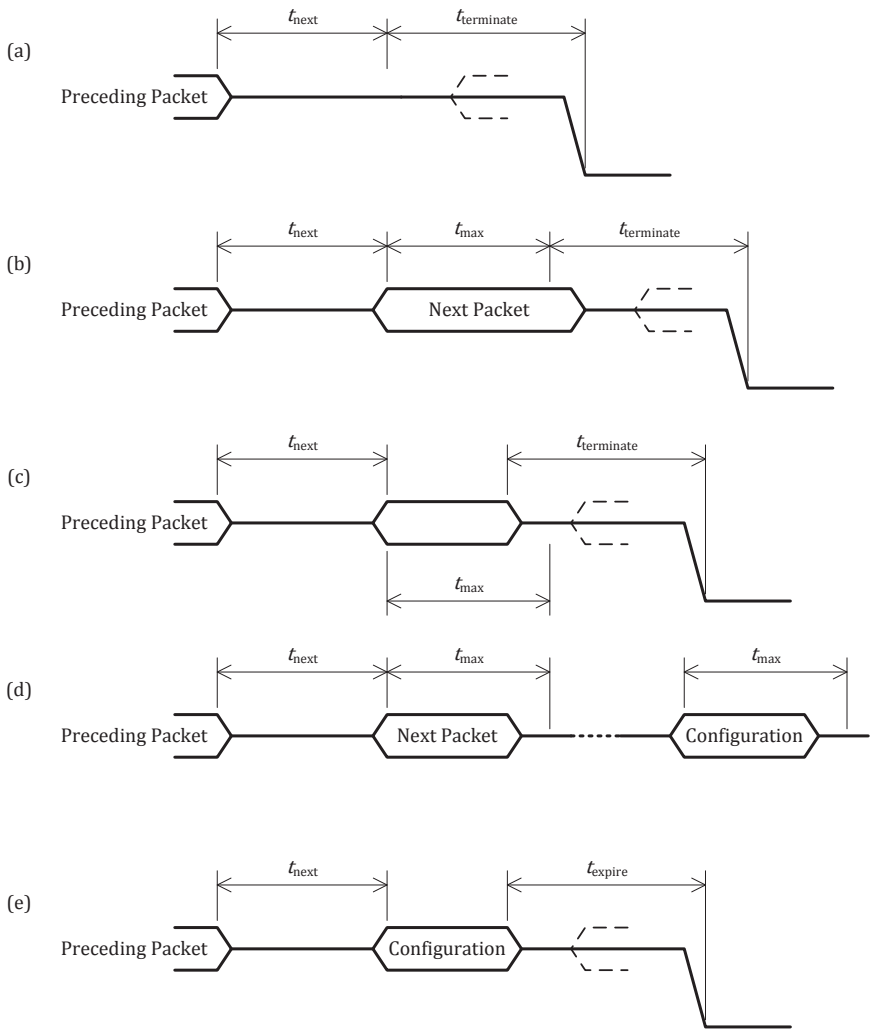

Figure 5-4: Power Transmitter timing in the *identification & configuration* phase

Based on the configuration information received from the Power Receiver, the Power Transmitter can create a Power Transfer Contract. This version 1.0.1 of the System Description Wireless Power Transfer, Volume I, Part 1, does not define the parameters that comprise a Power Transfer Contract. However, it is recommended that the Power Transfer Contract contains at least the following parameters:

- The maximum power that the Power Receiver intends to provide at its output (as obtained from the Maximum Power field of the Configuration Packet).

5.2.3 Power transfer phase

In the *power transfer* phase, the Power Transmitter controls the power transfer to the Power Receiver, in response to control data that it receives from the latter. For this purpose, the Power Transmitter shall receive zero or more of the following Packets:

- Control Error Packet.
- Rectified Power Packet.
- Charge Status Packet.
- End Power Transfer Packet.
- Any Proprietary Packet (as listed in Table 6-3). If the Power Transmitter does not know how to handle the message contained in the Proprietary Packet, the Power Transmitter shall ignore that message.
- Any reserved Packet (as indicated in Table 6-3). The Power Transmitter shall ignore the message contained in the reserved Packet.

The Power Transmitter shall receive the above Packets subject to the following timing constraints:

- If the Power Transmitter does not correctly receive the first Control Error Packet within t_{timeout} ms after receiving the stop bit of the checksum byte of the Configuration Packet, which the Power Transmitter has received in the *identification & configuration* phase, the Power Transmitter shall remove the Power Signal within $t_{\text{terminate}}$ ms. If the Power Transmitter does not correctly receive a Control Error Packet within t_{timeout} ms after receiving the stop bit of the checksum byte of the preceding Control Error Packet, the Power Transmitter shall remove the Power Signal within $t_{\text{terminate}}$ ms. See Figure 5-5(a).
- If the Power Transmitter does not correctly receive the first Rectified Power Packet within t_{power} s after receiving the stop bit of the checksum byte of the Configuration Packet, which the Power Transmitter has received in the *identification & configuration* phase, the Power Transmitter shall remove the Power Signal within $t_{\text{terminate}}$ ms. If the Power Transmitter does not correctly receive a Rectified Power Packet within t_{power} s after receiving the stop bit of the preceding Rectified Power Packet, the Power Transmitter shall remove the Power Signal within $t_{\text{terminate}}$ ms. See Figure 5-5 (f).

In addition to the above timing constraints, the Power Transmitter shall execute the following actions:

- Upon receiving a Control Error Value, the Power Transmitter shall make adjustments to its Operating Point for at most t_{active} ms, as defined in Section 5.2.3.1. Prior to making any adjustment, the Power Transmitter shall wait for t_{delay} ms to enable the Primary Cell current to stabilize again after communications. See Figure 5-5 (b).
- If the Power Transmitter correctly receives a Packet that does not comply with the above sequence, the Power Transmitter shall remove the Power Signal within $t_{\text{terminate}}$ ms after receiving the stop bit of that Packet's checksum byte. See Figure 5-5 (c).
- If the Power Transmitter receives an End Power Transfer Packet, the Power Transmitter shall:
    - Revert to the *identification & configuration* phase without changing its Operating Point, if the End Power Transfer Code is 0x07 (reconfigure). See Figure 5-5 (d).
    - Remove the Power Signal within t_{expire} ms after receiving the stop bit of the End Power Transfer Packet's checksum byte, if the End Power Transfer Code has any other value than 0x07. See Figure 5-5 (e).

 © Wireless Power Consortium, October 2010

- The Power Transmitter shall monitor the parameters contained in the Power Transfer Contract throughout the *power transfer* phase. If the Power Transmitter detects that the actual value of any of those parameters exceeds the limits contained in the Power Transfer Contract, the Power Transmitter shall remove the Power Signal within $t_{\text{terminate}}$ ms.
- If the Power Transmitter has removed the Power Signal, the Power Transmitter shall revert to the *selection* phase.

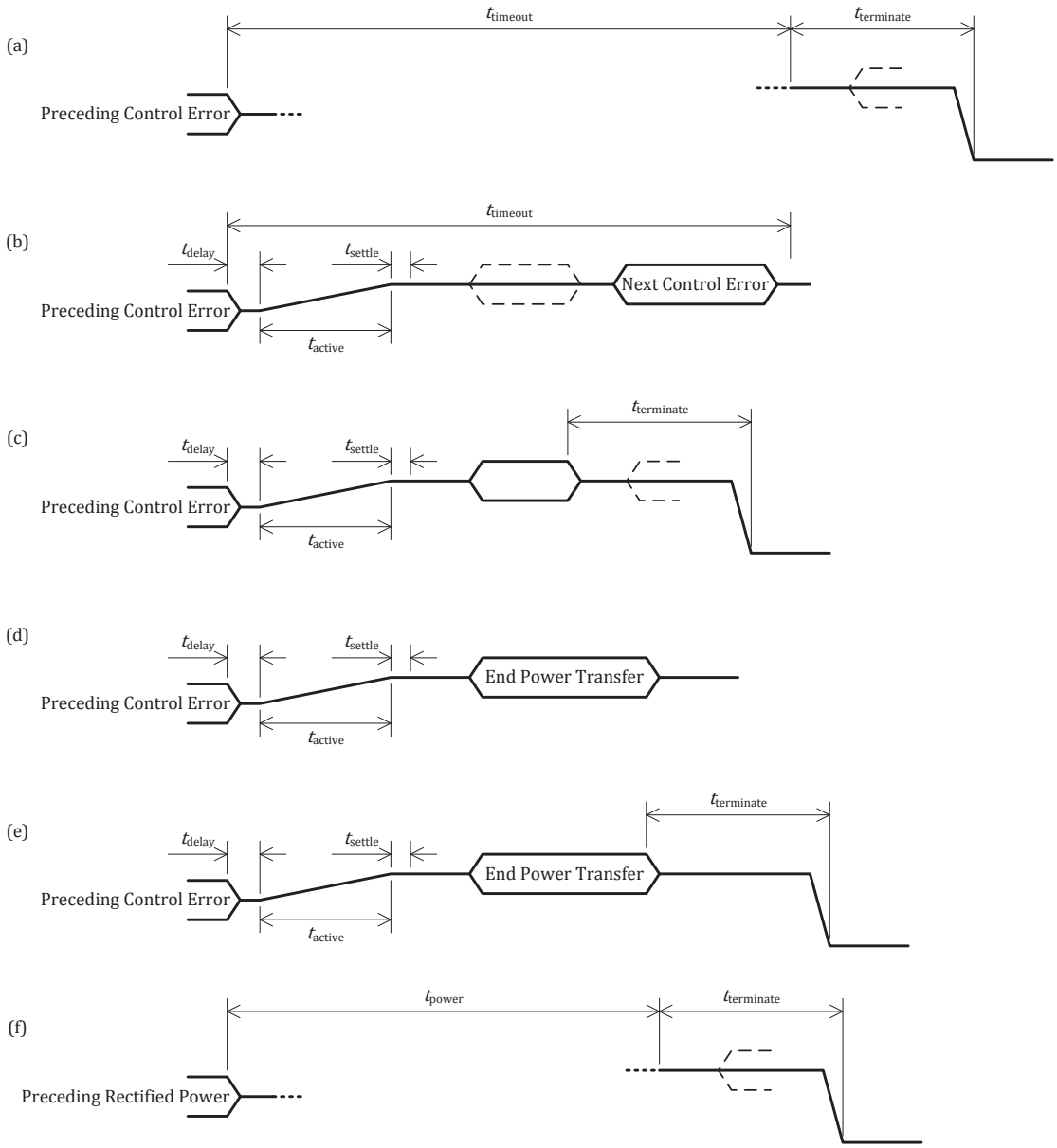

Figure 5-5: Power Transmitter timing in the *power transfer* phase

Table 5-4: Power Transmitter timing in the *power transfer* phase

Parameter	Symbol	Value	Unit
Control Error Packet time out	t_{timeout}	1250	ms
Power control active time	t_{active}	20	ms
Power control settling time	t_{settle}	3	ms
Rectified Power Packet time	t_{power}	30	s

5.2.3.1 Power transfer control

This version 1.0.1 of the System Description Wireless Power Transfer, Volume I, Part 1, defines a specific method, which the Power Transmitter shall use to control its Primary Cell current towards the new Primary Cell current (see also Section 5.1). This method is based on a discrete proportional-integral-differential (PID) algorithm as illustrated in Figure 5-6.

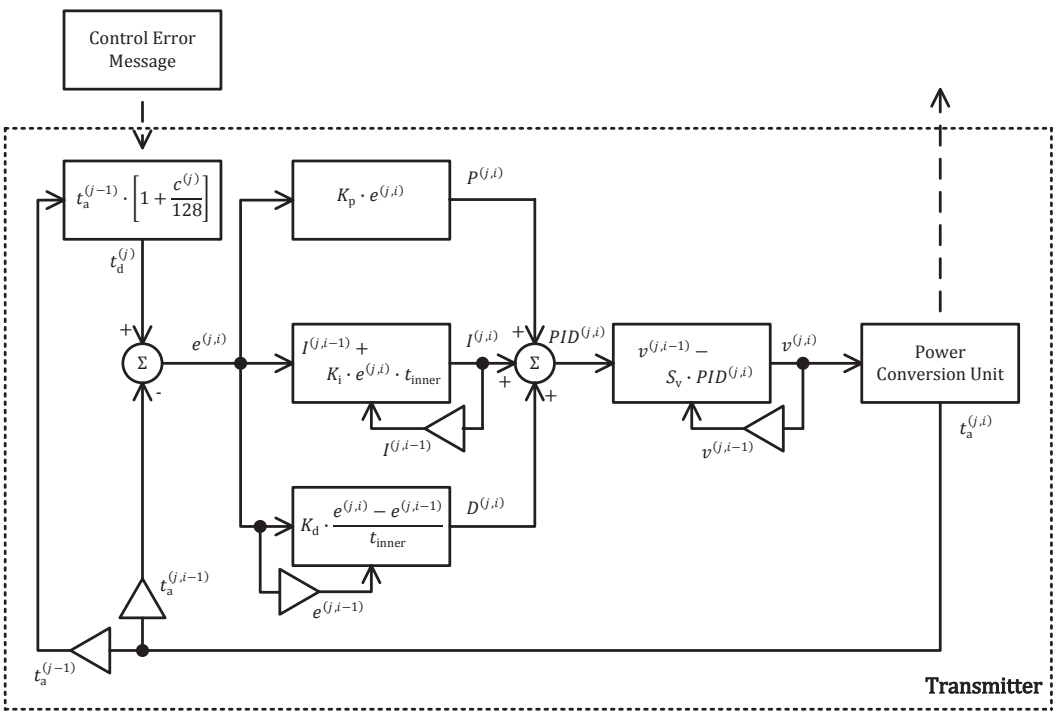

Figure 5-6: PID control algorithm

To execute this algorithm, the Power Transmitter shall execute the steps listed below, in the order of appearance. In the definitions of these steps, the index $j = 1,2,3, \ldots$ labels the sequence of Control Error Packets, which the Power Transmitter receives.

- Upon receipt of the jth Control Error Packet, the Power Transmitter shall calculate the new Primary Cell current $t_d^{(j)}$ as

$$t_d^{(j)} = t_a^{(j-1)} \cdot \left[1 + \frac{c^{(j)}}{128}\right],$$

  where $t_a^{(j-1)}$ represents the actual Primary Cell current—reached in response to the previous Control Error Packet—and $c^{(j)}$ represents the Control Error Value contained in the jth Control Error Packet. Note that $t_a^{(0)}$ represents the Primary Cell current at the start of the *power transfer* phase.

- If the Control Error Value $c^{(j)}$ is non-zero, the Power Transmitter shall make adjustments to its Primary Cell current for t_{active} ms. For this purpose, the Power Transmitter shall execute a loop comprising of the steps listed below. The index $i = 1,2,3, \ldots i_{\max}$ labels the iterations of this loop.
  - The Power Transmitter shall calculate the difference between the new Primary Cell and the actual Primary Cell current as the error

    $$e^{(j,i)} = t_{\text{d}}^{(j)} - t_{\text{a}}^{(j,i-1)},$$

    Where $t_{\text{a}}^{(j,i-1)}$ represents the Primary Cell current determined in iteration $i-1$ of the loop. Note that $t_{\text{a}}^{(j,0)}$ represents the actual Primary Cell current at the start of the loop.
  - The Transmitter shall calculate the proportional, integral, and derivative terms (in any order):

    $$P^{(j,i)} = K_{\text{p}} \cdot e^{(j,i)},$$

    $$I^{(j,i)} = I^{(j,i-1)} + K_{\text{i}} \cdot e^{(j,i)} \cdot t_{\text{inner}},$$

    $$D^{(j,i)} = K_{\text{d}} \cdot \frac{e^{(j,i)} - e^{(j,i-1)}}{t_{\text{inner}}},$$

    where K_{p} is the proportional gain, K_{i} is the integral gain, K_{d} is the derivative gain, and t_{inner} is the time required to execute a single iteration of the loop. In addition, the integral term $I^{(j,0)} = 0$, and the error $e^{(j,0)} = 0$. The Power Transmitter shall limit the integral term $I^{(j,i)}$ such that it remains within the range $-M_{\text{I}} \ldots + M_{\text{I}}$—if necessary, the Power Transmitter shall replace the calculated integral term $I^{(j,i)}$ with the appropriate boundary value.
  - The Power Transmitter shall calculate the sum of the proportional, integral, and derivative terms:

    $$PID^{(j,i)} = P^{(j,i)} + I^{(j,i)} + D^{(j,i)}.$$

    In this calculation, the Power Transmitter shall limit the sum $PID^{(j,i)}$ such that it remains within the range $-M_{\text{PID}} \ldots + M_{\text{PID}}$.
  - The Power Transmitter shall calculate the new value of the controlled variable

    $$v^{(j,i)} = v^{(j,i-1)} - S_{\text{v}} \cdot PID^{(j,i)},$$

    where S_{v} is a scaling factor that depends on the controlled variable. In addition, the controlled variable $v^{(j,0)} = v^{(j-1,i_{\max})}$, with $v^{(0,0)}$ representing the actual value of the controlled variable at the start of the *power transfer* phase. The controlled variable is either the Operating Frequency, the duty cycle of the inverter, or the voltage input to the inverter. If the calculated $v^{(j,i)}$ exceeds the specified range (see the definition of the individual Power Transmitter designs in Section 3), the Power Transmitter shall replace the calculated $v^{(j,i)}$ with the appropriate limiting value.
  - The Power Transmitter shall apply the new value of the controlled variable $v^{(j,i)}$ to its Power Conversion Unit.
  - The Power Transmitter shall determine the actual Primary Cell current $t_{\text{a}}^{(j,i)}$.

  The maximum number of iterations of the loop $i_{\max}$, and the time t_{inner} required to execute a single iteration of the loop shall satisfy the following relation:

  $$i_{\max} \cdot t_{\text{inner}} = t_{\text{active}}, \text{ with } 1 \text{ ms} \leq t_{\text{inner}} \leq 5 \text{ ms}.$$

- The Power Transmitter shall determine the Primary Cell current $t_{\text{a}}^{(\text{j})}$ exactly $t_{\text{delay}} + t_{\text{active}} + t_{\text{settle}}$ ms after receiving the stop bit of the checksum byte of the jth Control Error Packet.

See the definition of the individual Power Transmitter designs in Section 3 for the values of K_{p}, K_{i}, K_{d}, M_{I}, $M_{\text{PID}}$and S_{v}.

5.3 Power Receiver perspective

Section 5.3.1 defines the initial response of the Power Receiver to the application of a Power Signal. As part of this initial response, the Power Receiver wakes up its Communications and Control Unit—if that is not already up and running. Section 5.3.2 defines the response of a Power Receiver to a Digital Ping. This response ensures the Power Transmitter that it is dealing with a Power Receiver (rather than some unknown object). Section 5.3.3 defines the response of a Power Receiver to an extended Digital Ping. This response enables the Power Transmitter to identify the Power Receiver and establish a Power Transfer Contract. Finally, Section 5.3.4 defines the protocol that the Power Receiver shall execute in order to control the power transfer from the Power Transmitter.

In addition to the timing constraints given in Sections 5.3.1, 5.3.2, 5.3.3, and 5.3.4, the Power Receiver shall leave the *ping, identification & communication,* or *power transfer* phase at most t_{reset} ms (see Table 5-5) after the Power Transmitter removes the Power Signal. Note that this version 1.0.1 of the System Description Wireless Power Transfer, Volume I, Part 1, does not define how the Power Receiver should detect that the Power Transmitter removes the Power Signal.

Table 5-5: Power Receiver timing in any phase

Parameter	Symbol	Value	Unit
Power Receiver reset time	t_{reset}	28	ms

Moreover, notwithstanding the timing constraints given in Sections 5.3.1, 5.3.2, 5.3.3, and 5.3.4, the Power Receiver may stop transmitting Packets to the Power Transmitter at any time. (Informative) *This behavior causes the Power Transmitter to remove the Power Signal, possibly under the assumption that a user has removed the Power Receiver from the Interface Surface. The recommended behavior to cause the Power Transmitter to remove the Power Signal (when a user has not removed the Power Receiver from the Interface Surface) is to transmit an End Power Transfer Packet as defined in Sections* 5.3.2 and 5.3.4.

5.3.1 Selection phase

As soon as the Power Transmitter applies a Power Signal, the Power Receiver shall enter the *selection* phase.[7] Note that this version 1.0.1 of the System Description Wireless Power Transfer, Volume I, Part 1, does not define how the Power Receiver should detect that the Power Transmitter applies a Power Signal. If the Power Receiver considers the rectified voltage V_{r} to be sufficiently high, the Power Receiver shall proceed to the *ping* phase subject to the following timing constraints:

- The Power Receiver shall not proceed to the *ping* phase until the Power Transmitter has continuously applied the Power Signal for at least $t_{\text{wake}}^{(\text{early})}$ ms.
- The Power Receiver shall proceed to the *ping* phase at the latest $t_{\text{wake}}^{(\text{late})}$ ms after the Power Transmitter has first applied the Power Signal.

If the Power Receiver does not proceed to the *ping* phase, the Power Receiver shall not transmit any Packet.

See Figure 5-7 and Table 5-6, where $t_{\text{wake}}^{(\text{early})} \leq t_{\text{wake}} \leq t_{\text{wake}}^{(\text{late})}$.

[7]If the Power Receiver is not in the *selection* phase already. Note that if the Power Receiver needs time to start up its Communications and Control Unit, the Power Receiver shall consider itself to be in the *selection* phase during that start-up time. In general, the Power Receiver may consider itself to be in the *selection* phase whenever it is neither in the *ping* phase, nor in the *identification & configuration* phase, nor in the *power transfer* phase.

 © Wireless Power Consortium, October 2010

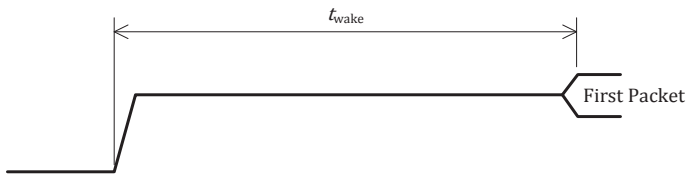

Figure 5-7: Power Receiver timing in the *selection* phase

Table 5-6: Power Receiver timing in the *selection* phase

Parameter	Symbol	Value	Unit
Wake up time (early)	$t_{wake}^{(early)}$	15	ms
Wake up time (late)	$t_{wake}^{(late)}$	58	ms

5.3.2 Ping phase

If the Power Receiver responds to te Digital Ping, the Power Receiver shall transmit either a Signal Strength Packet, or an End Power Transfer Packet as its first Packet. The Power Receiver shall transmit this first Packet immediately upon entering the *ping* phase.

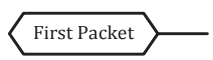

Figure 5-8: Power Receiver timing in the *ping* phase

After the Power Receiver has transmitted a Signal Strength Packet, the Power Receiver shall proceed to the *identification & configuration* phase. After the Power Receiver has transmitted an End Power Transfer Packet, shall remain in the *ping* phase. In that case, the Power Receiver should transmit additional End Power Transfer Packets.[8]

5.3.3 Identification & configuration phase

In the *identification & configuration* phase, the Power Receiver shall transmit the following sequence of Packets:

- If the Power Receiver enters the *identification & configuration* phase from the *ping* phase, an Identification Packet.
- If the Ext bit of the preceding Identification Packet is set to ONE, an Extended Identification Packet.
- Up to 7 optional configuration Packets from the following set (the order in which the Power Receiver transmits these Packets, if any, is not relevant):
  - A Power Control Hold-off Packet. The Power Control Hold-off Time t_{delay} contained in this Packet shall satisfy the relation $t_{delay}^{(min)} \leq t_{delay} \leq t_{delay}^{(max)}$. See Table 5-3.
  - Any Proprietary Packet (as listed in Table 6-3).
- A Configuration Packet.

The Power Receiver shall transmit the above sequence of Packets subject to the following timing constraints:

- The Power Receiver shall not start to transmit the preamble of the next Packet in the sequence within t_{silent} ms after transmitting the stop bit of the checksum byte of the directly preceding Packet in the sequence.

[8]The Power Transmitter can miss the first End Power Transfer Packet, e.g. due to a communications error, and continue to apply the Power Signal.

- The Power Receiver shall start to transmit the start bit of the next Packet in the sequence at the latest t_{next} ms after transmitting the stop bit of the checksum byte of the directly preceding Packet in the sequence.

With respect to the above timing constraints, if the Power Receiver has entered the *identification & configuration* phase from the *ping* phase, the directly preceding Packet of the Identification Packet is the Signal Strength Packet, which the Power Receiver has transmitted in the *ping* phase. In addition, if the Power Receiver has entered the *identification & configuration* phase from the *power transfer* phase, the directly preceding Packet of the first Packet in the sequence—either the Configuration Packet if the sequence does not contain optional configuration Packets, or the first optional configuration Packet—is the End Power Transfer Packet, which the Power Receiver has transmitted in the *power transfer* phase.

See Figure 5-9 and Table 5-7.

After the Power Receiver has transmitted a Configuration Packet, the Power Receiver shall proceed to the *power transfer* phase.

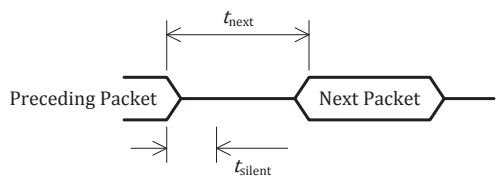

Figure 5-9: Power Receiver timing in the *identification & configuration* phase

Table 5-7: Power Receiver timing in the *identification & configuration* phase

Parameter	Symbol	Value	Unit
Silent time out	t_{silent}	7	ms
Next Packet time out	t_{next}	20	ms

5.3.4 Power transfer phase

In the *power transfer* phase, the Power Receiver controls the power transfer from the Power Transmitter, by means of control data that it transmits to the latter. For this purpose, the Power Receiver shall transmit zero or more of the following Packets:

- Control Error Packet. The Power Receiver shall set the Control Error Value to zero if the actual Control Point is equal to the desired Control Point. The Power Receiver shall set the Control Error Value to a negative value to request a decrease of the Primary Cell current. The Power Receiver shall set the Control Error Value to a positive value to request an increase of the Primary Cell current. See also Sections 5.1 and 5.2.3.1.
- Rectified Power Packet.
- Charge Status Packet.
- End Power Transfer Packet.
- Any Proprietary Packet (as listed in Table 6-3).

The Power Receiver shall transmit the above Packets subject to the following timing constraints:

- The Power Receiver shall not start to transmit the preamble of any Packet within t_{silent} ms after transmitting the stop bit of the checksum byte the directly preceding Packet. As an additional constraint, the Power Receiver shall not start to transmit the preamble of any Packet within $t_{\text{delay}} + t_{\text{control}}$ ms after transmitting the stop bit of the checksum byte of a Control Error Packet, where t_{delay} is the Power Control Hold-off value, which the Power Receiver has transmitted using the last Power Control Hold-off Packet in the *identification & configuration* phase. If the Power

Receiver has not transmitted a Power Control Hold-off Packet to the Power Transmitter, the Power Receiver shall use $t_{\text{delay}} = t_{\text{delay}}^{(\text{min})}$ (see Table 5-3).

- The Power Receiver shall start to transmit the start bit of the first Control Error Packet at the latest t_{interval} ms after transmitting the stop bit of the checksum byte of the Configuration Packet in the sequence, which the Power Receiver has transmitted in the *identification & configuration* phase. The Power Receiver shall transmit the start bit of the header byte of a next Control Error Packet within t_{interval} ms after transmitting the stop bit of the checksum byte of the preceding Control Error Packet.
- It is recommended that the Power Receiver determines its actual Control Point $t_{\text{delay}}+t_{\text{control}}$ ms after transmitting the stop bit of the checksum byte of a Control Error Packet.
- The Power Receiver shall start to transmit the start bit of the header byte of the first Rectified Power Packet within $t_{\text{rectified}}$ s after transmitting the stop bit of the checksum byte of the Configuration Packet, which the Power Receiver has transmitted in the *identification & configuration* phase. The Power Receiver shall transmit the start bit of the header byte of a next Rectified Power Packet within $t_{\text{rectified}}$ s after transmitting the stop bit of the checksum byte of the preceding Rectified Power Packet.

See Figure 5-10 and Table 5-8.

In addition to the above timing constraints, if the Power Receiver has transmitted an End Power Transfer Packet, which contains an End Power Transfer Code of 0x07, the Power Receiver shall revert to the *identification & configuration* phase. Moreover, if the Power Receiver has transmitted an End Power Transfer Packet, which contains any other End Power Transfer Code, the Power Receiver shall remain in the *power transfer* phase (and therefore shall continue to transmit Control Error Packets), until the Power Transmitter removes the Power Signal. Furthermore, the Power Receiver should transmit additional End Power Transfer Packets if the Power Transmitter does not remove the Power Signal.[9]

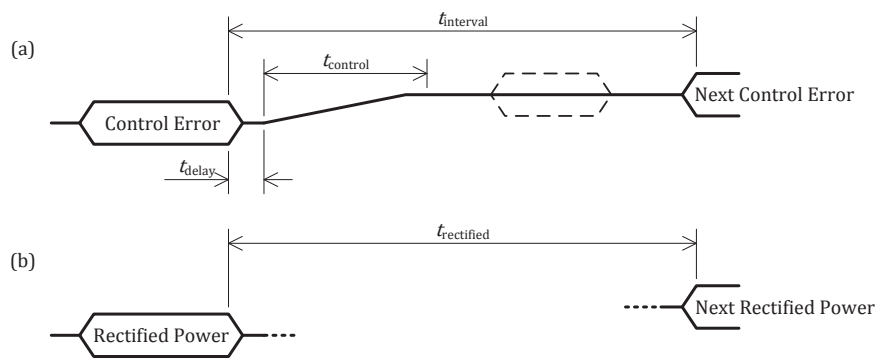

Figure 5-10: Power Receiver timing in the *power transfer* phase

Table 5-8: Power Receiver timing in the *power transfer* phase

Parameter	Symbol	Value	Unit
Interval	t_{interval}	250	ms
Controller time*	t_{control}	23	ms
Rectified Power Packet time	$t_{\text{rectified}}$	5	s

*Note that $t_{\text{control}} = t_{\text{active}} + t_{\text{settle}}$ (see Table 5-4)

[9](Informative) *The Power Transmitter can miss the first and possibly subsequent End Power Transfer Packets, e.g. due to communications errors, and continue to apply the Power Signal. However, eventually the Power Transmitter should remove the Power Signal due to a time-out as defined in Section 5.2.3.*

This page is intentionally left blank.

 © Wireless Power Consortium, October 2010

6 Communications Interface

6.1 Introduction

The Power Receiver communicates to the Power Transmitter using backscatter modulation. For this purpose, the Power Receiver modulates the amount of power, which it draws from the Power Signal. The Power Transmitter detects this as a modulation of the current through and/or voltage across the Primary Cell. In other words, the Power Receiver and Power Transmitter use an amplitude modulated Power Signal to provide a Power Receiver to Power Transmitter communications channel.

6.2 Physical and data link layers

This Section 6.2 defines both the physical layer and the data link layer of the communications interface.

6.2.1 Modulation scheme

The Power Receiver shall modulate the amount of power, which it draws from the Power Signal, such that the Primary Cell current and/or Primary Cell voltage assume two states, namely a HI state and a LO state.[10] A state is characterized in that the amplitude is constant within a certain variation Δ for at least t_S ms. If the Power Receiver is properly aligned to the Primary Cell of a type A1 Power Transmitter, and for all appropriate loads, at least one of the following three conditions shall apply:[11]

- The difference of the amplitude of the Primary Cell current in the HI and LO state is at least 15 mA.
- The difference of the Primary Cell current, as measured at instants in time that correspond to one quarter of the cycle of the control signal driving the half-bridge inverter (see Figure 3-4),[12] in the HI and LO state is at least 15 mA.
- The difference of the amplitude of the Primary Cell voltage in the HI and LO state is at least 200 mV.

During a transition the Primary Cell current and Primary Cell voltage are undefined. See Figure 6-1 and Table 6-1.

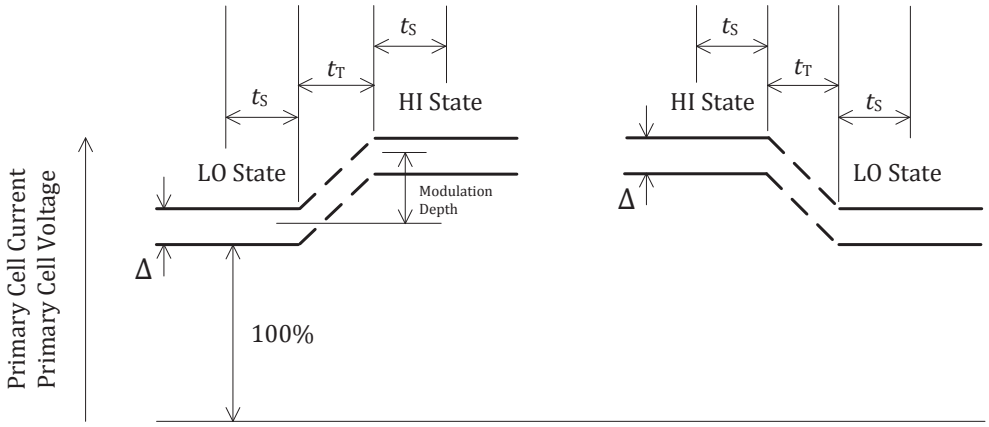

Figure 6-1: Amplitude modulation of the Power Signal

[10](Informative) *Note that the HI and LO states do not correspond to fixed Primary Cell current and/or Primary Cell voltage levels.*
[11]The design requirements of the Mobile Device determine both the range of lateral displacements that constitute proper alignment, and the range of loading conditions on its Power Receiver.
[12]The start of the cycle corresponds the closing of the top switch in the half-bridge inverter.

Table 6-1: Amplitude modulation of the Power Signal

Parameter	Symbol	Value	Unit
Maximum transition time	t_T	100	μs
Minimum stable time	t_S	150	μs
Current amplitude variation	Δ	8	mA
Voltage amplitude variation	Δ	110	mV

6.2.2 Bit encoding scheme

The Power Receiver shall use a differential bi-phase encoding scheme to modulate data bits onto the Power Signal. For this purpose, the Power Receiver shall align each data bit to a full period t_{CLK} of an internal clock signal, such that the start of a data bit coincides with the rising edge of the clock signal. This internal clock signal shall have a frequency $f_{CLK} = 2^{\pm 4\%}$ kHz.

The Receiver shall encode a ONE bit using two transitions in the Power Signal, such that the first transition coincides with the rising edge of the clock signal, and the second transition coincides with the falling edge of the clock signal. The Receiver shall encode a ZERO bit using a single transition in the Power Signal, which coincides with the rising edge of the clock signal. Figure 6-2 shows an example.

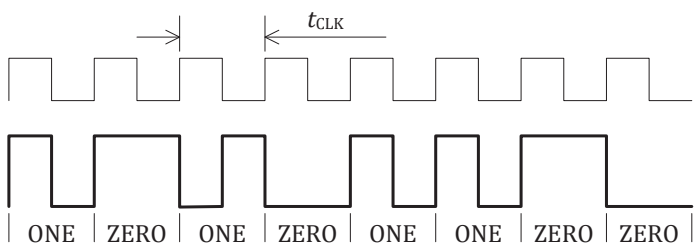

Figure 6-2: Example of the differential bi-phase encoding

6.2.3 Byte encoding scheme

The Power Receiver shall use an 11-bit asynchronous serial format to transmit a data byte. This format consists of a start bit, the 8 data bits of the byte, a parity bit, and a single stop bit. The start bit is a ZERO. The order of the data bits is lsb first. The parity bit is odd. This means that the Power Receiver shall set the parity bit to ONE if the data byte contains an even number of ONE bits. Otherwise, the Power Receiver shall set the parity bit to ZERO. The stop bit is a ONE. Figure 6-3 shows the data byte format—including the differential bi-phase encoding of each individual bit—using the value 0x35 as an example.

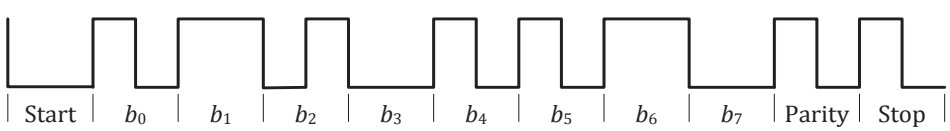

Figure 6-3: Example of the asynchronous serial format

6.2.4 Packet structure

The Power Receiver shall communicate to the Power Transmitter using Packets. As shown in Figure 6-4, a Packet consists of 4 parts, namely a preamble, a header, a message, and a checksum. The preamble consists of a minimum of 11 and a maximum of 25 bits, all set to ONE, and encoded as defined in Section 6.2.2. The preamble enables the Power Transmitter to synchronize with the incoming data and accurately detect the start bit of the header.

 © Wireless Power Consortium, October 2010

The header, message, and checksum consist of a sequence of three or more bytes encoded as defined in Section 6.2.3.[13]

Preamble	Header	Message	Checksum

Figure 6-4: Packet format

The Power Transmitter shall consider a Packet as received correctly if:

- The Power Transmitter has detected at least 4 preamble bits that are followed by a start bit.
- The Power Transmitter has not detected a parity error in any of the bytes that comprise the Packet. This includes the header byte, the message bytes and the checksum byte.
- The Power Transmitter has detected the stop bit of the checksum byte.
- The Power Transmitter has determined that the checksum byte is consistent (see Section 6.2.4.3).

If the Power Transmitter does not receive a Packet correctly, the Power Transmitter shall discard the Packet, and not use any of the information contained therein. (Informative) *In the ping phase as well as in the identification and configuration phase, this typically leads to a time-out, which causes the Power Transmitter to remove the Power Signal.*

6.2.4.1 Header

The header consists of a single byte that indicates the Packet type. In addition, the header implicitly provides the size of the message contained in the Packet. The number of bytes in a message is calculated from the value contained in the header of the Packet, as shown in the center column of Table 6-2.

Table 6-2: Message size

Header	Message Size*	Comment
0x00…0x1F	1 + (Header – 0) / 32	1 ×32 messages (size 1)
0x20…0x7F	2 + (Header – 32) / 16	6 × 16 messages (size 2…7)
0x80…0xDF	8 + (Header – 128) / 8	12 × 8 messages (size 8…19)
0xE0…0xFF	20 + (Header – 224) / 4	8 × 4 messages (size 20…27)

*Values in this column are truncated to an integer

Table 6-3 lists the Packet types defined in this version 1.0.1 of the System Description Wireless Power Transfer, Volume I, Part 1. The formats of the messages contained in each of these Packet types are defined in Section 6.3. The format of the messages contained in Packet types, which are listed as Proprietary, is implementation dependent. Header values that are not listed in Table 6-3 are reserved. The Power Receiver shall not transmit Packets that have one of the reserved values as the header.

[13]The Power Receiver should turn off its communications modulator after transmitting a Packet. This may cause an additional HI state to LO state or LO state to HI state transition in the Primary Cell current.

Table 6-3: Packet types

Header*	Packet Types	Message Size
ping phase		
0x01	Signal Strength	1
identification & configuration phase		
0x06	Power Control Hold-off	1
0x51	Configuration	5
0x71	Identification	7
0x81	Extended Identification	8
power transfer phase		
0x02	End Power Transfer	1
0x03	Control Error	1
0x04	Rectified Power	1
0x05	Charge Status	1
identification & configuration / power transfer phase		
0x18	Proprietary	1
0x19	Proprietary	1
0x28	Proprietary	2
0x29	Proprietary	2
0x38	Proprietary	3
0x48	Proprietary	4
0x58	Proprietary	5
0x68	Proprietary	6
0x78	Proprietary	7
0x84	Proprietary	8
0xA4	Proprietary	12
0xC4	Proprietary	16
0xE2	Proprietary	20
0xF2	Proprietary	24

*Header values not listed in this table correspond to reserved Packet types

6.2.4.2 Message

The Power Receiver shall ensure that the message contained in the Packet is consistent with the Packet type indicated in the header. See Section 6.3 for a detailed definition of the possible messages. The first byte of the message, byte B_0, directly follows the header.

6.2.4.3 Checksum

The checksum consists of a single byte, which enables the Power Transmitter to check for transmission errors. The Power Transmitter shall calculate the checksum as follows:

 © Wireless Power Consortium, October 2010

$$C := H \oplus B_0 \oplus B_1 \oplus \ldots \oplus B_{\text{last}},$$

where C represents the calculated checksum, H represents the header byte, and B_0, B_1,..., B_{last} represent the message bytes.

If the calculated checksum C and the checksum byte contained in the Packet are not equal, the Power Transmitter shall determine that the checksum is inconsistent.

6.3 Logical layer

This Section 6.3 defines the format of the messages of the communications interface.

6.3.1 Signal Strength Packet (0x01)

Table 6-4 defines the format of the message contained in a Signal Strength Packet

Table 6-4: Signal Strength

	b_7	b_6	b_5	b_4	b_3	b_2	b_1	b_0
B_0	Signal Strength Value							

Signal Strength Value The unsigned integer value in this field indicates the degree of coupling between the Primary Cell and Secondary Coil, with the purpose to enable Power Transmitters that use Free Positioning to determine the Primary Cell that provides optimum power transfer (see also Annex C). To determine the degree of coupling, the Power Receiver shall monitor the value of a suitable variable during a Digital Ping. Examples of such variables are:

- The rectified voltage.
- The open circuit voltage (as measured at the output disconnect switch).
- The received Power (if the rectified voltage is actively or passively clamped during a Digital Ping).

The variable that is chosen shall result in a Signal Strength Value that increases monotonically with increasing degree of coupling. The Signal Strength Value is reported as

$$\text{Signal Strength Value} = \frac{U}{U_{\max}} \cdot 256,$$

where U is the monitored variable, and $U_{\max}$ is the maximum value, which the Power Receiver expects for that variable during a Digital Ping. Note that the Power Receiver shall set the Signal Strength Value to 255 in the case that $U \geq U_{\max}$.

6.3.2 End Power Transfer Packet (0x02)

Table 6-3 defines the format of the message contained in an End Power Transfer Packet.

Table 6-5: End Power Transfer

	b_7	b_6	b_5	b_4	b_3	b_2	b_1	b_0
B_0	End Power Transfer Code							

End Power Transfer Code This field identifies the reason for the End Power Transfer request, as listed in Table 6-6. The Power Receiver shall not transmit End Power Transfer Packets that contain any of the values that Table 6-6 lists as reserved.

Table 6-6: End Power Transfer values

Reason	Value
Unknown	0x00
Charge Complete	0x01
Internal Fault	0x02
Over Temperature	0x03
Over Voltage	0x04
Over Current	0x05
Battery Failure	0x06
Reconfigure	0x07
No Response	0x08
Reserved	0x09…0xFF

(Informative) *It is recommended that the Receiver uses the End Power Transfer values listed in Table 6-6 as follows:*

- ***0x00*** *The Receiver may use this value if it does not have a specific reason for terminating the power transfer, or if none of the other values listed in Table 6-6 is appropriate.*
- ***0x01*** *The Receiver should use this value if it determines that the battery of the Mobile Device is fully charged. On receipt of an End Power Transfer Packet containing this value, the Transmitter should set any "charged" indication on its user interface that is associated with the Receiver.*
- ***0x02*** *The Receiver may use this value if it has encountered some internal problem, e.g. a software or logic error.*
- ***0x03*** *The Receiver should use this value if it has measured a temperature within the Mobile Device that exceeds a limit.*
- ***0x04*** *The Receiver should use this value if it has measured a voltage within the Mobile Device that exceeds a limit.*
- ***0x05*** *The Receiver should use this value if it has measured a current within the Mobile Device that exceeds a limit.*
- ***0x06*** *The Receiver should use this value if it has determined a problem with the battery of the Mobile Device.*
- ***0x07*** *The Receiver should use this value if it desires to renegotiate a Power Transfer Contract.*

 © Wireless Power Consortium, October 2010

- ***0x08*** *The Receiver should use this value if it determines that the Transmitter does not respond to Control Error Packets as expected (i.e. does not increase/decrease its Primary Cell current appropriately).*

6.3.3 Control Error Packet (0x03)

Table 6-7 defines the format of the message contained in a Control Error Packet.

Table 6-7: Control Error

	b_7	b_6	b_5	b_4	b_3	b_2	b_1	b_0
B_0	Control Error Value							

Control Error Value The (two's complement) signed integer value contained in this field ranges between –128…+127 (inclusive), and provides input to the Operating Point controller of the Power Transmitter. See Sections 5.2.3.1 and 5.3.4 for more details. Values outside the indicated range are reserved and shall not appear in a Control Error Packet.

6.3.4 Rectified Power Packet (0x04)

Table 6-8 defines the format of the message contained in a Rectified Power Packet.

Table 6-8: Rectified Power

	b_7	b_6	b_5	b_4	b_3	b_2	b_1	b_0
B_0	Rectified Power Value							

Rectified Power Value The unsigned integer contained in this field contains the amount of power that the Power Receiver is providing at the output of the rectifier, expressed as a percentage of the Maximum Power (see Section 6.3.7). For clarity, the value 0 means that the Power Receiver does not provide power at the output of the rectifier, and the value 100 means that the Power Receiver provides an amount of power that is equal to the requested Maximum Power. (Informative) *It is not an error for the Rectified Power Value field to contain a value greater than 100. However, this could result in a removal of the Power Signal.*

6.3.5 Charge Status Packet (0x05)

Table 6-9 defines the format of the message contained in a Charge Status Packet.

Table 6-9: Charge Status

	b_7	b_6	b_5	b_4	b_3	b_2	b_1	b_0
B_0	Charge Status Value							

Charge Status Value If the Mobile Device contains a rechargeable energy storage device, the unsigned integer contained in this field indicates the charging level of that energy storage device, as a percentage of the fully charged level. For clarity, the value 0 means an empty energy storage device, and the value 100 means a fully charged energy storage device. If the Mobile Device does not contain a rechargeable energy storage device, or if the Power Receiver cannot provide charge status information,[14] this field shall contain the value 0xFF. All other values are reserved and shall not appear in the Charge Status Packet.

6.3.6 Power Control Hold-off Packet (0x06)

Table 6-8 defines the format of the message contained in a Power Control Hold-off Packet.

[14]Note that the Charge Status Packet is optional, which means that the Power Receiver may elect not to send the Charge Status Packet.

Table 6-10: Power control hold-off

	b_7	b_6	b_5	b_4	b_3	b_2	b_1	b_0
B_0	Power Control Hold-off Time							

Power Control Hold-off Time The unsigned integer contained in this field contains the amount of time in milliseconds, which the Power Transmitter shall wait prior to making adjustments to the Primary Cell current after receipt of a Control Error Packet.

6.3.7 Configuration Packet (0x51)

Table 6-11 defines the format of the message contained in a Configuration Packet.

Table 6-11: Configuration

	b_7	b_6	b_5	b_4	b_3	b_2	b_1	b_0
B_0	Power Class		Maximum Power					
B_1	Reserved							
B_2	Prop	Reserved				Count		
B_3	Reserved							
B_4	Reserved							

Power Class This field contains an unsigned integer value that indicates the Power Receiver's Power Class. Power Receivers that comply with this version 1.0.1 of the System Description Wireless Power Transfer, Volume I, Part 1, shall set this field to 0.

Maximum Power Apart from a scaling factor, the unsigned integer value contained in this field indicates the maximum amount of power, which the Power Receiver expects to provide at the output of the rectifier. This maximum amount of power is calculated as follows:

$$P_{\max} = \left(\frac{\text{Maximum Power}}{2}\right) \times 10^{\text{Power Class}} \quad \text{W.}$$

Prop If this bit is set to ZERO, the Power Transmitter shall control the power transfer according to the method defined in Section 5.2.3.1. If this bit is set to ONE, the Power Transmitter may control the power transfer according to a proprietary method instead of the method defined in Section 5.2.3.1. However, if this bit is set to ONE, the Power Transmitter shall continue to ensure that the received Control Error Packets comply with the timings defined in Section 5.2.3. (Informative) *This implies that a Power Transmitter terminates the power transfer if it times out when waiting for a Control Error Packet. Moreover, this implies that setting the Prop bit to ONE does not relieve the Power Receiver from transmitting Control Error Packets on a regular basis. Finally, if the Prop bit is set to ZERO, the Power Transmitter could still decide to abort the power transfer based on information contained in a Proprietary Packet.*

Reserved These bits shall be set to ZERO.

Count This field contains an unsigned integer value that indicates the number of optional configuration Packets that the Power Receiver transmits in the *identification & configuration* phase.

6.3.8 Identification Packet (0x71)

Table 6-12 defines the format of the message contained in an Identification Packet.

 © Wireless Power Consortium, October 2010

Table 6-12: Identification

	b_7	b_6	b_5	b_4	b_3	b_2	b_1	b_0
B_0	Major Version				Minor Version			
B_1	(msb) Manufacturer Code							
B_2								(lsb)
B_3	Ext	(msb) Basic Device Identifier						
⋮								
B_6								(lsb)

Major Version The combination of this field and the Minor Version field identifies to which revision of the System Description Wireless Power Transfer the Power Receiver complies. The Major Version field shall contain the binary coded digit value 0x1.

Minor Version The combination of this field and the Major Version field identifies to which minor revision of the System Description Wireless Power Transfer the Power Receiver complies. The Minor Version field shall contain the binary coded digit value 0x0.

Manufacturer Code The bit string contained in this field identifies the manufacturer of the Power Receiver, as specified in [PRMC].

Ext If this bit is set to ZERO, the bit string

Manufacturer Code || Basic Device Identifier

identifies the Power Receiver. If this bit is set to ONE, the bit string

Manufacturer Code || Basic Device Identifier || Extended Device Identifier

identifies the Power Receiver (see also Section 6.3.9).

Basic Device Identifier The bit string contained in this field contributes to the identification of the Power Receiver. A Power Receiver manufacturer should ensure that the combination of Basic Device Identifier and Manufacturer ID is sufficiently unique. Embedding a serial number of at least 20 bits in the Basic Device Identifier is sufficient. Alternatively, using a (pseudo) random number generator to dynamically generate part of the Basic Device Identifier is sufficient as well, provided that the generated part complies with the following requirements:

- The generated part shall comprise at least 20 bits.
- All possible values shall occur with equal probability.
- The Power Receiver shall not change the generated part while the Power Signal is applied.
- The Power Receiver shall retain the generated part for at least 2 s if the Power Signal is interrupted or removed.

(Informative) *These requirements ensure that the scanning procedure of a type B1 Power Transmitter proceeds correctly; see also Annex C.2.*

6.3.9 Extended Identification Packet (0x81)

Table 6-13 defines the format of the message contained in an Extended Identification Packet.

Table 6-13: Extended Identification

	b_7	b_6	b_5	b_4	b_3	b_2	b_1	b_0
B_0	(msb)							
⋮				Extended Device Identifier				
B_7								(lsb)

Extended Device Identifier The bit string contained in this field contributes to the identification of the Power Receiver. See Section 6.3.8

 © Wireless Power Consortium, October 2010

Annex A Example Power Receiver Designs (Informative)

A.1 Power Receiver example 1

The design of Power Receiver example 1 is optimized to directly charge a single cell lithium-ion battery at constant current or voltage.

A.1.1 Mechanical details

This Section A.1.1 provides the mechanical details of Power Receiver example 1.

A.1.1.1 Secondary Coil

The Secondary Coil of Receiver example 1 is of the wire-wound type, and consists of no. 26 AWG (0.41 mm diameter) litz wire having 26 strands of no. 40 AWG (0.08 mm diameter). As shown in Figure A-1, the Secondary Coil has a rectangular shape and consists of a single layer. Table A-1 lists the dimensions of the Secondary Coil.

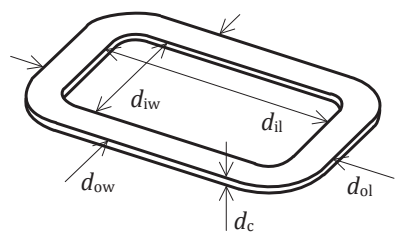

Figure A-1: Secondary Coil of Power Receiver example 1

Table A-1: Secondary Coil parameters of Power Receiver example 1

Parameter	Symbol	Value
Outer length	d_{ol}	$44.25^{\pm 0.25}$ mm
Inner length	d_{il}	$28.75^{\pm 0.25}$ mm
Outer width	d_{ow}	$30.25^{\pm 0.25}$ mm
Inner width	d_{iw}	$14.75^{\pm 0.25}$ mm
Thickness	d_c	0.6 mm
Number of turns per layer	N	14
Number of layers	–	1

A.1.1.2 Shielding

As shown in Figure A-2, Power Receiver example 1 employs Shielding. This Shielding has a size of $d_l \times d_w = 52^{\pm 1} \times 35^{\pm 1}$ mm², and has a thickness of $d_s = 1.0$ mm. The Shielding is centered directly on the top face of the Secondary Coil (such that the long side of the Secondary Coil and the Shielding are aligned). The composition of the Shielding consists of any choice from the following list of materials:

- Material 44 — Fair Rite Corporation.
- Material 28 — Steward, Inc.
- CMG22G — Ceramic Magnetics, Inc.

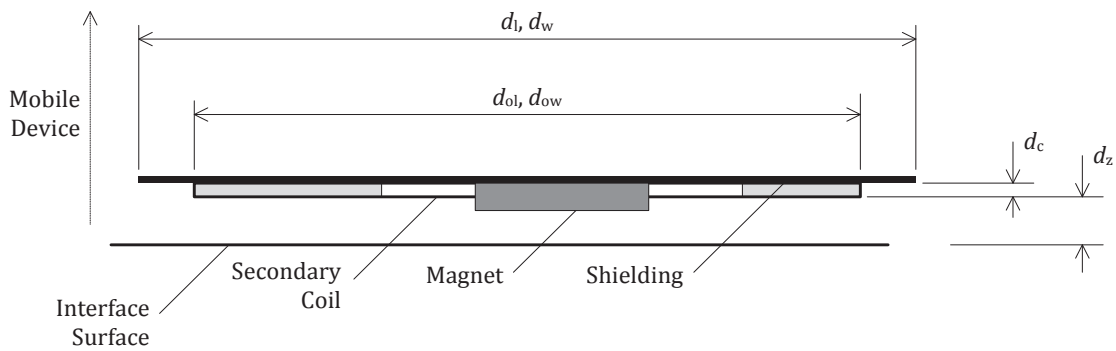

Figure A-2: Secondary Coil and Shielding assembly of Power Receiver example 1

A.1.1.3 Interface Surface

The distance from the Secondary Coil to the Interface Surface of the Mobile Device is $d_z = 2.5$ mm, uniform across the bottom face of the Secondary Coil.

A.1.1.4 Alignment aid

Power Receiver example 1 employs a bonded Neodymium magnet, which has its south pole oriented towards the Interface Surface. The diameter of the magnet is 15 mm, and its thickness is 1.2 mm.

A.1.2 Electrical details

At the secondary resonance frequency $f_S = 100$ kHz, the assembly of Secondary Coil, Shielding and magnet has inductance values $L_s = 15.3^{\pm 1}$ µH and $L'_s = 18.4^{\pm 1}$ µH. The capacitance values in the dual resonant circuit are $C_S = 137^{\pm 1\%}$ nF and $C_d = 1.6^{\pm 5\%}$ nF.

As shown in Figure A-3, the rectification circuit consists of four diodes in a full bridge configuration and a low-pass filtering capacitance $C = 20$ µF.

The communications modulator consists of two equal capacitances $C_{cm} = 22^{\pm 5\%}$ nF in series with two switches. The resistance value $R = 10^{\pm 5\%}$ kΩ.

The subsystem connected to the output of Power Receiver example 1 is expected to consist of a single cell lithium-ion battery. This Power Receiver example 1 controls the output current and output voltage into the battery according to the common constant current to constant voltage charging profile. An example profile is indicated in Figure A-4. The maximum output power to the battery is controlled to a 5 W level.

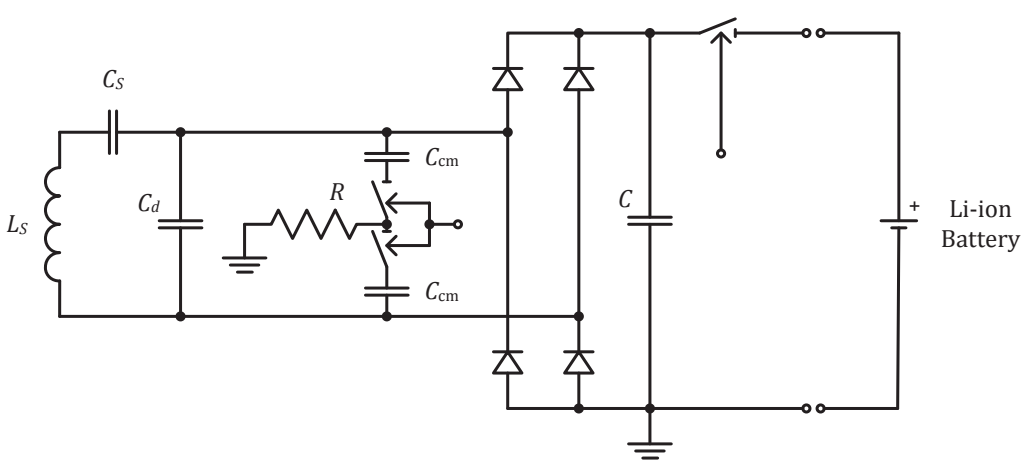

Figure A-3: Electrical details of Power Receiver example 1

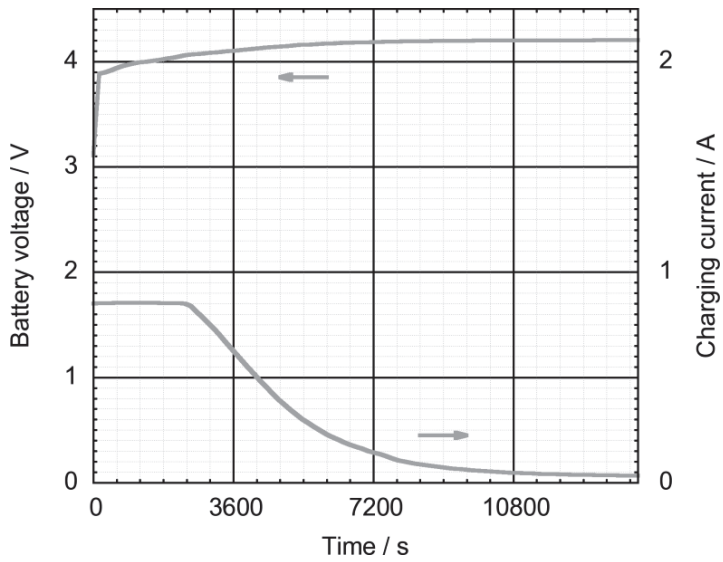

Figure A-4: Li-ion battery charging profile

A.2 Power Receiver example 2

The design of Power Receiver example 2 uses post-regulation to create a voltage source at the output of the Power Receiver.

A.2.1 Mechanical details

This Section A.2.1 provides the mechanical details of Power Receiver example 2.

A.2.1.1 Secondary Coil

The Secondary Coil of Power Receiver example 2 is of the wire-wound type, and consists of litz wire having 24 strands of no. 40 AWG (0.08 mm diameter). As shown in Figure A-5, the Secondary Coil has a circular shape and consists of multiple layers. All layers are stacked with the same polarity. Table A-2 lists the dimensions of the Secondary Coil.

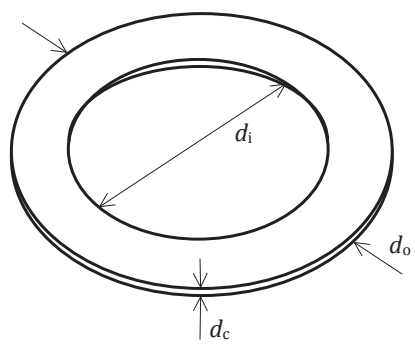

Figure A-5: Secondary Coil of Power Receiver example 2

Table A-2: Parameters of the Secondary Coil of Power Receiver example 2

Parameter	Symbol	Value
Outer diameter	d_o	$32^{\pm 0.25}$ mm
Inner diameter	d_i	$21.7^{\pm 0.6}$ mm
Thickness	d_c	$0.9^{\pm 0.2}$ mm
Number of turns per layer	N	9
Number of layers	–	2

A.2.1.2 Shielding

As shown in Figure A-6, Power Receiver example 2 employs Shielding. The Shielding has a size of $d_l \times d_w = 35^{\pm 1} \times 35^{\pm 1}$ mm², and is centered directly on the top face of the Secondary Coil. The Shielding has a thickness of $d_s = 0.8$ mm and consists of any choice from the materials from the following list:

- Material 78 — Fair Rite Corporation.
- 3C94 — Ferroxcube.
- N87 — Epcos AG.
- PC44 —TDK Corp.

 © Wireless Power Consortium, October 2010

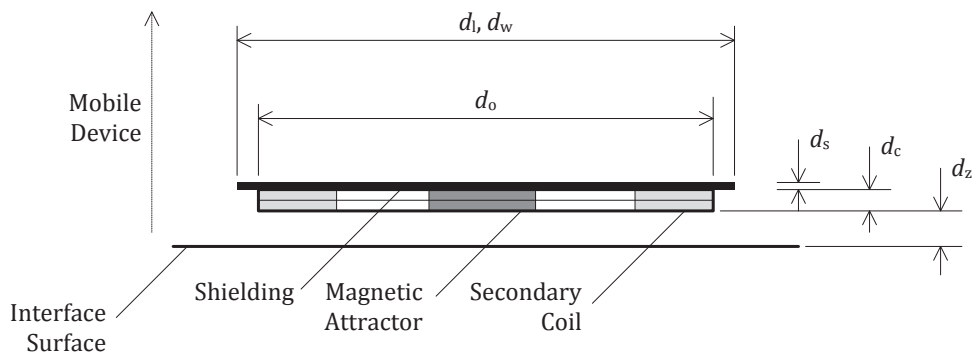

Figure A-6: Secondary Coil and Shielding assembly of Power Receiver example 2

A.2.1.3 Interface Surface

The distance from the Secondary Coil to the Interface Surface of the Mobile Device is $d_z = 2$ mm, uniform across the bottom face of the Secondary Coil.

A.2.1.4 Alignment aid

Power Receiver example 2 employs Shielding material (see Annex A.2.1.2) as an alignment aid (see Section 4.2.1.2). The diameter of the this Shielding material is 10 mm, and its thickness is 0.8 mm.

A.2.2 Electrical details

At the secondary resonance frequency $f_S = 100$ kHz, the assembly of Secondary Coil and Shielding has an inductance values $L_S = 23.8^{\pm 1}$ µH and $L'_s = 30.8^{\pm 1}$ µH. The capacitance values in the dual resonant circuit are $C_S = 82^{\pm 5\%}$ nF and $C_d = 1.0^{\pm 5\%}$ nF.

As shown in Figure A-7, the rectification circuit consists of four diodes in a full bridge configuration and a low-pass filtering capacitance $C = 20^{\pm 20\%}$ µF.

The communications modulator consists of a $R_{cm} = 33^{\pm 5\%}$ Ω resistance in series with a switch.

The buck converter comprises the post-regulation stage of Power Receiver example 2. The Control and Communications Unit of the Power Receiver can disable the buck converter. This provides the output disconnect functionality. In addition, the Control and Communications Unit controls the input voltage V_r to the buck converter, such that $V_r = 7$ V.

The buck converter has a constant output voltage of 5 V and an output current

$$I_{buck} = \frac{\eta(P) \cdot P}{5\ \mathrm{V}},$$

Where P is the output power of the buck converter, and $\eta(P)$ is the power dependent efficiency of the buck converter.

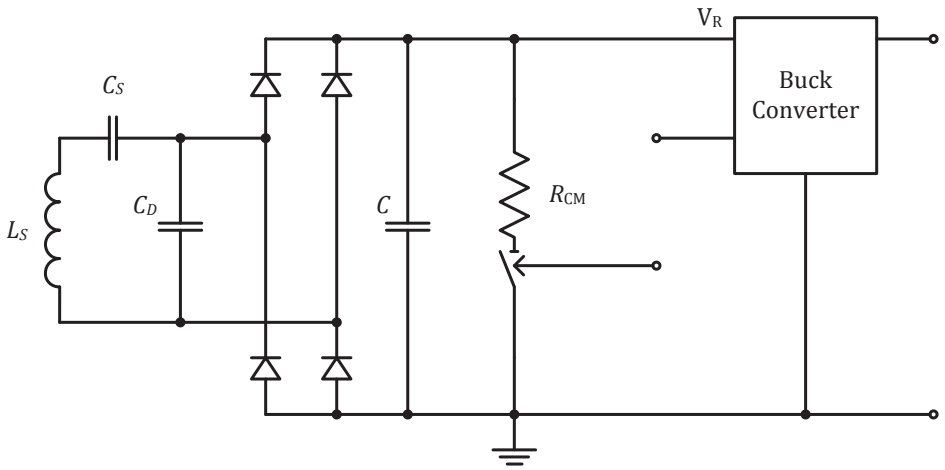

Figure A-7: Electrical details of Power Receiver example 2

© Wireless Power Consortium, October 2010

Annex B Object Detection (Informative)

A Power Transmitter may use a variety of methods to efficiently discover and locate objects on the Interface Surface. These methods, also known as "analog ping," do not involve waking up the Power Receiver and starting digital communications. Typically zero or more analog pings precede the Digital Ping, which the Power Transmitter executes in the first *power transfer* phase. This Annex B provides some analog ping examples.

B.1 Resonance shift

This analog ping method is based on a shift of the Power Transmitter's resonance frequency, due to the presence of a (magnetically active) object on the Interface Surface.

For a type A1 Power Transmitter, this method proceeds as follows: The Power Transmitter applies a very short pulse to its Primary Coil, at an Operating Frequency f_{od} , which corresponds to the resonance frequency of the Primary Coil and series resonant capacitance (in case there is no object present on the Interface Surface). This results in a Primary Coil current I_{od}. The measured value depends on whether or not an object is present within the Active Area. It is highest if the resonance frequency has not shifted due to the presence of an object. Accordingly, if I_{od} is below a threshold value I_{odt}, the Power Transmitter can conclude that an object is present. Note that the values of f_{od} and I_{odt} are implementation dependent.

The Power Transmitter can apply the pulses at regular intervals t_{odi} and have , where each pulse has a duration of at most t_{odd} µs. Measurement of the Primary Coil current I_{od} should occur at most t_{odm} µs after the pulse. See also Figure B-1 and Table B-1.

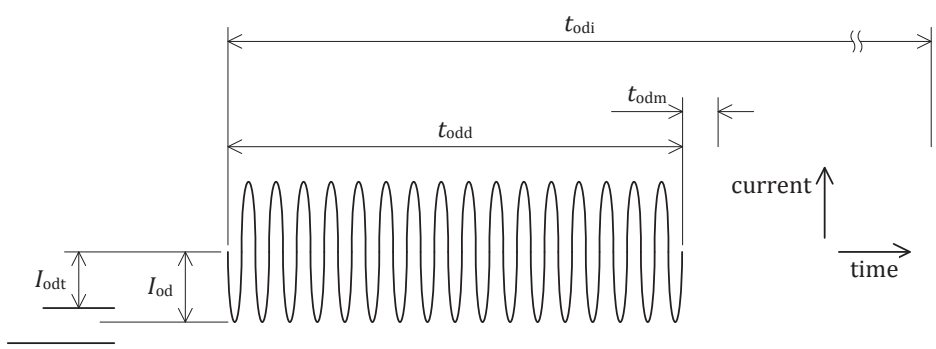

Figure B-1: Analog ping based on a resonance shift

Table B-1: Analog ping based on a resonance shift

Parameter	Symbol	Value	Unit
Object detection interval	t_{odi}	500	ms
Object detection duration	t_{odd}	70	µs
Object detection measurement	t_{odm}	19.5	µs

For type B1 and B2 Power Transmitters, this method proceeds as follows: The Power Transmitter applies a very short pulse to a set of Primary Coils, which the multiplexer has connected in parallel—note that this set is not necessarily limited to a Primary Cell. The Operating Frequency f_{od} of the pulse corresponds to the resonance frequency of the set of Primary Coils and the capacitance of the impedance matching circuit (in case there is no object present on the Interface Surface). This results in a current I_{od} through the inductance of the impedance matching circuit. The measured value depends on whether or not an object is present within the Active Area. It is lowest if the resonance frequency has not shifted due to the presence of an object. Accordingly, if I_{od} is above a threshold value I_{odt}, the Power Transmitter can conclude that an object is present. Note that the values of f_{od} and I_{odt} are implementation dependent.

The Power Transmitter can apply the pulses at regular intervals t_{odi}, where each pulse has a duration of at most t_{odd} µs. Measurement of the current I_{od} should occur at most t_{odm} µs after the pulse. See also Figure B-1 and Table B-1.

B.2 Capacitance change

This analog ping method is based on a change of the capacitance of an electrode on or near the Interface Surface, due to the placement of an object on the Interface Surface.

This method is particularly suitable for Power Transmitters that use Free Positioning, because it enables implementations that have a very low stand-by power, and yet exhibit an acceptable response time to a user. The reason is that (continuously) scanning the Interface Surface for changes in the arrangement of objects and Power Receivers thereon is a relatively costly operation. In contrast, sensing changes in the capacitance of an electrode can be very cheap (in terms of power requirements). Note that capacitance sensing can proceed with substantial parts of the Base Station powered down.

Power Transmitters designs that are based on an array of Primary Coils can use the array of Primary Coils as the electrode in question. For that purpose, the multiplexer should connect all (or a relevant subset of) Primary Coils in the array to a capacitance sensing unit—and at the same time disconnect the Primary Coils from the driving circuit. Power Transmitter designs that are based on a moving Primary Coil can use the detection coils on the Interface Surface (see Annex C.3) as electrodes.

It is recommended that the capacitance sensing circuit is able to detect changes with a rsolution of 100 fF or better. If the sensed capacitance change exceeds some implementation defined threshold, the Power Transmitter can conclude that an object is place onto or removed from the Interface Surface. In that case, the Power Transmitter should proceed to localize the objects and attempt to identify the Power Receivers on the Interface Surface, e.g. as discussed in Annex C.

 © Wireless Power Consortium, October 2010

Annex C Power Receiver Localization (Informative)

This Annex C discusses several aspects that relate to the discovery of Power Receivers amongst the objects that the Power Transmitter has discovered on its Interface Surface.

C.1 Guided Positioning

In the case of Guided Positioning, discovery and localization of a Power Receiver is straightforward: The Power Transmitter should simply execute a Digital Ping, as defined in Section 5.2.1. If the Power Transmitter receives a Signal Strength Packet or an End Power Transfer Packet, it has discovered and located a Power Receiver. Otherwise, the object is not a Power Receiver.

C.2 Primary Coil array based Free Positioning

In the case of Free Positioning, discovery and localization of a Power Receiver is less straightforward. This Annex C.2 discusses one example approach, which is particularly suited to a Primary Coil array based Power Transmitter. In this approach, the Power Transmitter first discovers and locates the objects that are present on its Interface Surface (e.g. using any of the methods discussed in Annex B). This results in a set of Primary Cells, which represents the locations of potential Power Receivers. For each of the Primary Cells in this set, the Power Transmitter executes a Digital Ping (Section 5.2.1), removing the Power Signal after receipt of a Signal Strength Packet (or an End Power Transfer Packet, or after a time out).[15] This yields a new set of Primary Cells, namely those which report a Signal Strength Value that exceeds a certain threshold—which the Power Transmitter chooses. Finally, the Power Transmitter executes an extended Digital Ping (Sections 5.2.1 and 5.2.2) for each of the Primary Cells in this new set in order to identify the discovered Power Receivers. In order to select the most appropriate Primary Cells for power transfer from the set, the Power Transmitter should take the situations discussed in Annex C.2.1, C.2.2, and C.2.3 into account.

C.2.1 A single Power Receiver covering multiple Primary Cells

Figure C-1 shows a situation in which the final set contains 12 Primary Cells. In order to select the most appropriate Primary Cell from this set, the Power Transmitter compares all Basic Device Identifiers that is has obtained. In this case, these are all identical. Accordingly, the Power Transmitter concludes that all Primary Cells in the set correspond to one and the same Power Receiver. Therefore, the Power Transmitter selects the Primary Cell that has the highest Signal Strength Value as the most appropriate Primary Cell to use for power transfer. In the specific example shown in Figure C-1, this could be Primary Cell 2, 3, 4, 5, 8, 9, 10, or 11.

[15]Note that the Power Transmitter should ensure that after terminating a Digital Ping using a particular Primary Cell, it waits sufficiently long—for example t_{reset} (see Table 5-5 in Section 5.3)—prior to executing a Digital Ping to that same Primary Cell or any of its neighboring Primary Cells. This ensures that any Power Receiver that is present on the Interface Surface at the location of the Primary Cell can return to a well-defined state.

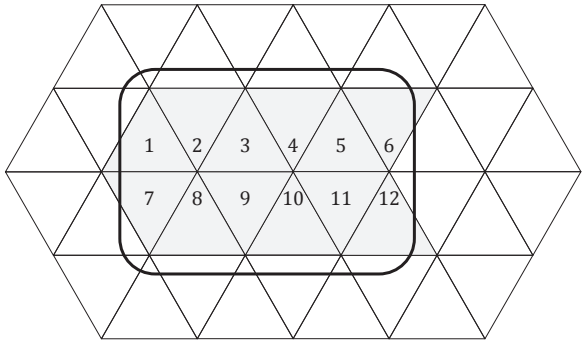

Figure C-1: Single Power Receiver covering multiple Primary Cells

C.2.2 Two Power Receivers covering two adjacent Primary Cells

Figure C-2 shows a situation in which the final set contains 12 Primary Cells—the same set as in the situation discussed in Annex C.2.1. In order to select the most appropriate Primary Cell from this set, the Power Transmitter compares all Basic Device Identifiers that is has obtained. In this case, the Power Transmitter determines that there are two subsets of identical Basic Device Identifiers. Accordingly, the Power Transmitter concludes that it is dealing with two distinct Power Receivers. Therefore, the Power Transmitter selects the most appropriate Primary Cell from each subset. In the specific example shown in Figure C-2, this could be Primary Cell 2, or 8 for the left-hand Power Receiver, and Primary Cell 5, or 11 for the right-hand Power Receiver. Note that due to interference, the Power Transmitter most likely cannot communicate reliably using Primary Cells 3, 4, 9, and 10.

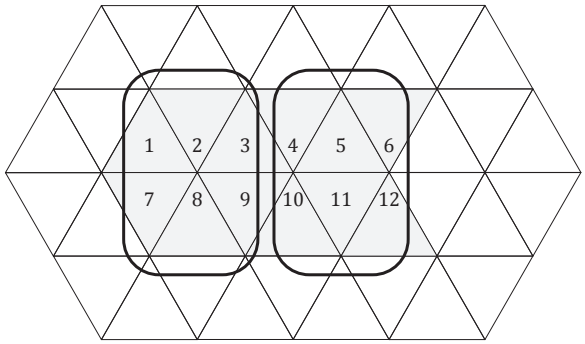

Figure C-2: Two Power Receivers covering two adjacent Primary Cells

C.2.3 Two Power Receivers covering a single Primary Cell

Figure C-3 shows a situation in which the final set contains 2 Primary Cells. Here, the underlying assumption is that the two Power Receivers have widely different response times (t_{wake}, see Section 5.3.1) to a Digital Ping. For example, the left-hand Power Receiver responds very fast (close to $t_{\text{wake}}^{(\text{early})}$), whereas the right-hand Power Receiver responds very slow (close to $t_{\text{wake}}^{(\text{late})}$). This enables the Power Transmitter to receive the Signal Strength Packet from the fast Power Receiver, but not from the slow one. However, the Power Transmitter cannot reliably receive any further communications—from either Power Receiver—due to collisions between transmissions from the two Power Receivers. Accordingly, the Power Transmitter cannot select a Primary Cell for power transfer.

 © Wireless Power Consortium, October 2010

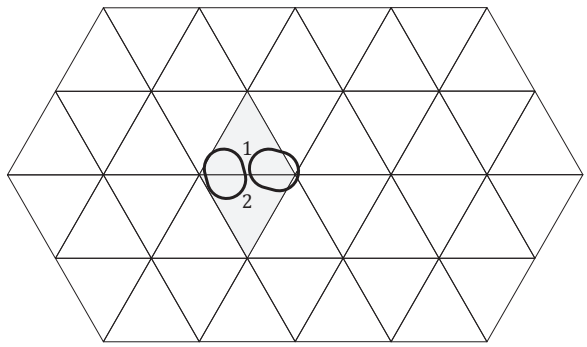

Figure C-3: Two Power Receivers covering a single Primary Cell

C.3 Moving Primary Coil based Free Positioning

In the case of moving Primary Coil based Free Positioning, typically a special Detection Unit provides discovery and localization of a Power Receiver. This Annex C.3 discusses an example of such a Detection Unit, which makes use of the resonance in the Power Receiver at the detection frequency f_d. In this example Detection Unit, detection coils are printed on the Interface Surface of the Base Station. The top right-hand part of Figure C-4 shows a single rectangular detection coil, which consists of two windings. The width of the detection coil is 22 mm, and its length depends on the size of the Interface Surface. As shown in the bottom part of Figure C-4, a first set of these detection coils is laid out in parallel to cover the entire Interface Surface, in such a way that that the areas of two adjacent detection coils overlap for 60%. A second set of these detection coils is laid out similarly, but orthogonal to the detection coils in the first set.

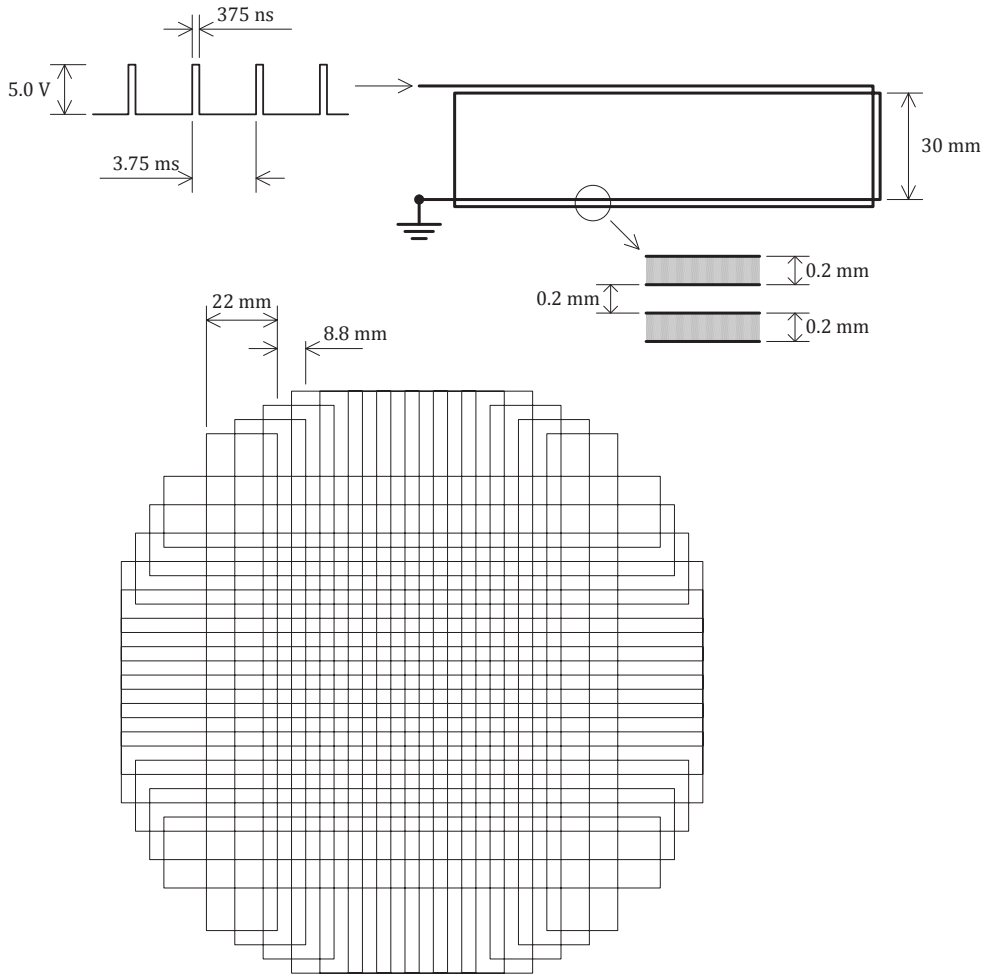

Figure C-4: Detection Coil

Detection of a Power Receiver proceeds as follows: In first instance, the Power Transmitter uses the detection coils as an electrostatic sensor to detect the placement or removal of objects on the Interface Surface; see Annex B.2. Once the Power Transmitter has detected an object, it uses the detection coils to determine the position of that object on the Interface Surface. For this purpose, the Power Transmitter applies a short pulse train to each of the detection coils—one by one. This pulse train consists of 8 pulses, and is shaped to trigger the resonance in the Power Receiver at the frequency f_d. See the top left-hand part of Figure C-4. As a result, a minute amount of energy is transferred to the resonant circuit in the Power Receiver. Immediately after the pulse train terminates, this energy is re-radiated, which the Power Transmitter can detect using the detection coils. By analyzing the responses from each of the detection coils, the Power Transmitter can determine the location of the Power Receiver on the Interface Surface. Subsequently, the Power Transmitter can move its coil underneath the Power Receiver, and can start to transfer power as defined in Section 5. During power transfer, the Power Transmitter can adjust the position of the Primary Coil in order to optimize its coupling to the Secondary Coil, e.g. by maximizing the system efficiency—the Power Transmitter can calculate the system efficiency from its input power and the Actual Power Value contained in the Actual Power Packets, which it receives from the Power Receiver.

An advantage of this detection method is that it is not sensitive to foreign object that do not exhibit a resonance near the detection frequency f_d. The reason is that such objects do not store and re-radiate energy picked up from the pulse train. As a result a Power Transmitter does not need to move the Primary Coil to attempt power transfer to such objects.

 © Wireless Power Consortium, October 2010

Annex D Metal Object Detection (Informative)

When metallic objects are exposed to an alternating magnetic field, eddy currents cause such objects to heat up. The amount of heating depends on the amplitude and frequency of the magnetic field, as well as on the characteristics of the object such, as its resistivity, size, and shape. In a wireless power transfer system, such heating is undesired as it manifests itself as a power loss, and therefore a reduced power tranfer efficiency. Moreover, if no appropriate measures are taken, such heating could lead to unsafe situations if the heated objects would reach high temperatures. This Annex D discusses the recommended mechanism for Power Transmitters and Power Receivers to deal with the power loss due to parasitic metals—i.e. metals that are neither part of the Power Transmitter, nor of the Power Receiver, but which are dissipating power from the magnetic field during power transfer. Examples of such parasitic metals are coins, keys, paperclips, etc.

It is recommended that a Power Receiver performs metal object detection by monitoring the temperature near its Interface Surface. If the measured temperature exceeds an internal safety threshold, the Power Receiver should terminate power transfer by communicating an End Power Transfer Packet—with End Power Transfer Code set to 0x03—to the Power Transmitter.

It is recommended that a Power Transmitter monitors the temperature near its Interface Surface. If the measured temperature exceeds an internal safety threshold, the Power Transmitter should terminate the power transfer. In addition, it is recommended that a Power Transmitter estimates the power that is transmitted through its Interface Surface, and monitors the Rectified Power Values that are communicated by the Power Receiver. If the combination of the estimate and these values indicate an unexpected power loss, the Power Transmitter should terminate the power transfer.

This page is intentionally left blank.

 © Wireless Power Consortium, October 2010

Annex E History of Changes

Table E-1: Changes from Version 1.0 to Version 1.01

Location	Old	New	Reason
Copyright page	CLASSIFICATION… confidential.	-	Part 1 is public
Figure 5-5(f)	Preceding Received Power	Preceding Rectified Power	Correction
Figures in Annexes		Numbering corrected	Correction

This page is intentionally left blank.

 © Wireless Power Consortium, October 2010