US009407327B2

(12) **United States Patent**
**Kirby et al.**

(10) **Patent No.: US 9,407,327 B2**
(45) **Date of Patent: Aug. 2, 2016**

(54) **WIRELESS POWER FOR CHARGEABLE AND CHARGING DEVICES**

(75) Inventors: **Miles A. Kirby**, San Diego, CA (US); **Matthew S. Grob**, La Jolla, CA (US)

(73) Assignee: **QUALCOMM Incorporated**, San Diego, CA (US)

( * ) Notice: Subject to any disclaimer, the term of this patent is extended or adjusted under 35 U.S.C. 154(b) by 325 days.

(21) Appl. No.: **12/695,911**

(22) Filed: **Jan. 28, 2010**

(65) **Prior Publication Data**

US 2010/0225272 A1 Sep. 9, 2010

**Related U.S. Application Data**

(60) Provisional application No. 61/152,359, filed on Feb. 13, 2009.

(51) **Int. Cl.**

| | |
|---|---|
| ***H02J 7/00*** | (2006.01) |
| ***H04B 5/00*** | (2006.01) |
| ***H02J 7/02*** | (2016.01) |

(52) **U.S. Cl.**

CPC . ***H04B 5/00*** (2013.01); ***H02J 7/025*** (2013.01); ***H02J 50/10*** (2016.02); ***H02J 50/12*** (2016.02); *H04B 5/0031* (2013.01); *H04B 5/0037* (2013.01)

(58) **Field of Classification Search**

CPC ..... H02J 7/025; H02J 50/10; H02J 50/12; H04B 5/00; H04B 5/0031; H04B 5/0037

USPC ..... 320/108

See application file for complete search history.

(56) **References Cited**

U.S. PATENT DOCUMENTS

| | | | | |
|---|---|---|---|---|
| 7,511,452 | B2 * | 3/2009 | Bersenev | 320/106 |
| 8,193,764 | B2 * | 6/2012 | Jakubowski | 320/108 |
| 2005/0127869 | A1 * | 6/2005 | Calhoon et al. | 320/108 |
| 2005/0181823 | A1 * | 8/2005 | Haartsen | 455/553.1 |
| 2006/0113955 | A1 * | 6/2006 | Nunally | 320/108 |
| 2007/0090790 | A1 * | 4/2007 | Hui | 320/108 |
| 2007/0274373 | A1 * | 11/2007 | Cornwall et al. | 375/141 |
| 2007/0278998 | A1 | 12/2007 | Koyama | |
| 2008/0054638 | A1 * | 3/2008 | Greene et al. | 290/1 R |
| 2008/0162029 | A1 | 7/2008 | Itoh | |
| 2009/0033280 | A1 * | 2/2009 | Choi et al. | 320/108 |
| 2009/0058361 | A1 * | 3/2009 | John | 320/128 |
| 2009/0072782 | A1 * | 3/2009 | Randall | G06F 1/1616 320/107 |

(Continued)

FOREIGN PATENT DOCUMENTS

| | | | |
|---|---|---|---|
| CN | 1918852 | A | 2/2007 |
| DE | WO2008125072 | * | 10/2008 |

(Continued)

OTHER PUBLICATIONS

English Machine Translation for WO/2008/125072 (13 Pages).*

(Continued)

*Primary Examiner* — Nathaniel Pelton

(74) *Attorney, Agent, or Firm* — Knobbe, Martens, Olson & Bear LLP

(57) **ABSTRACT**

Exemplary embodiments are directed to wireless power. A method may comprise detecting one or more transmit elements positioned within an associated charging region. The method may further comprise selecting at least one transmit element of the detected one or more transmit elements to receive wireless power therefrom to enable for optimal charging of a charging device.

**32 Claims, 13 Drawing Sheets**

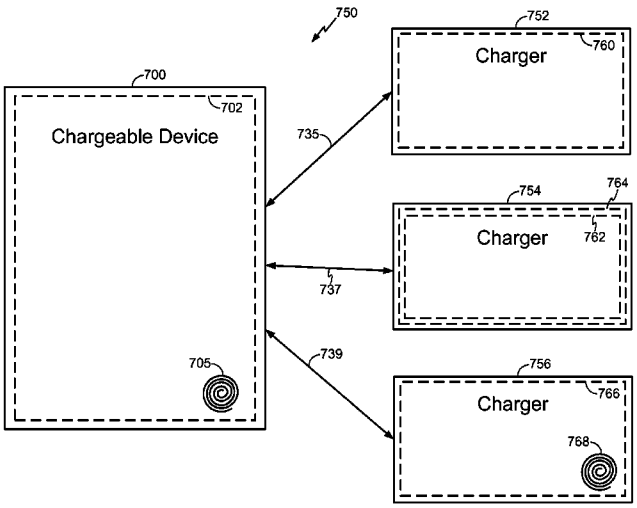




SAMSUNG EXHIBIT 1037

(56) **References Cited**

U.S. PATENT DOCUMENTS

| | | | | |
|---|---|---|---|---|
| 2009/0096413 | A1* | 4/2009 | Partovi et al. | 320/108 |
| 2009/0106567 | A1* | 4/2009 | Baarman | 713/300 |
| 2009/0127937 | A1* | 5/2009 | Widmer et al. | 307/149 |
| 2009/0153098 | A1* | 6/2009 | Toya | H02J 7/025 320/108 |
| 2009/0174364 | A1* | 7/2009 | Onishi et al. | 320/108 |
| 2009/0284369 | A1 | 11/2009 | Toncich et al. | |
| 2009/0286475 | A1 | 11/2009 | Toncich et al. | |
| 2009/0286476 | A1 | 11/2009 | Toncich et al. | |
| 2010/0219796 | A1* | 9/2010 | Kallmyer | H02J 7/025 320/153 |
| 2010/0328044 | A1* | 12/2010 | Waffenschmidt | H02J 7/025 340/10.4 |
| 2011/0133691 | A1* | 6/2011 | Hautanen | 320/108 |
| 2011/0285210 | A1* | 11/2011 | Lemmens et al. | 307/104 |

FOREIGN PATENT DOCUMENTS

| | | | |
|---|---|---|---|
| JP | 2000011105 | A | 1/2000 |
| JP | 2006517378 | A | 7/2006 |
| JP | 2008011696 | | 1/2008 |
| JP | 2010515425 | A | 5/2010 |
| TW | 329503 | | 4/1998 |
| WO | 2004068726 | A2 | 8/2004 |
| WO | WO-2008081405 | A1 | 7/2008 |
| WO | WO2008125072 | A1 | 10/2008 |

OTHER PUBLICATIONS

International Search Report and Written Opinion—PCT/US2010/024161, International Search Authority—European Patent Office—Sep. 17, 2010.

Taiwan Search Report—TW099104920—TIPO—Dec. 5, 2012.

* cited by examiner

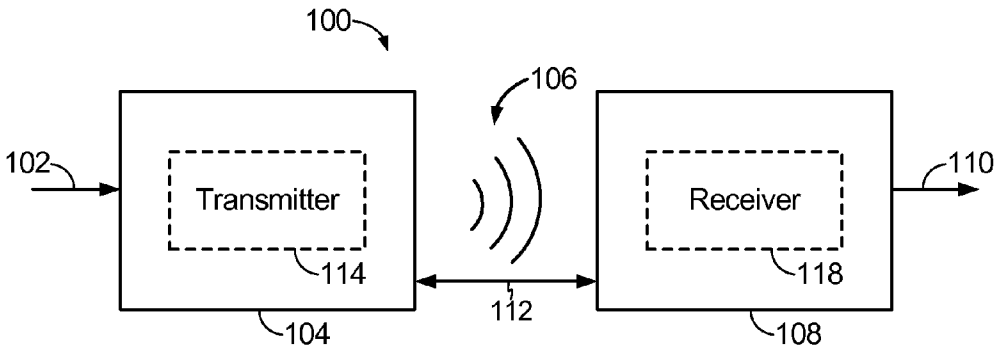


FIG. 1

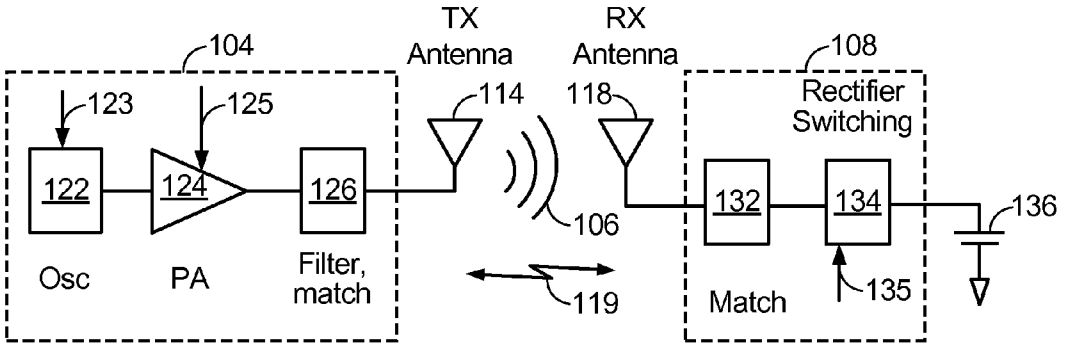


FIG. 2

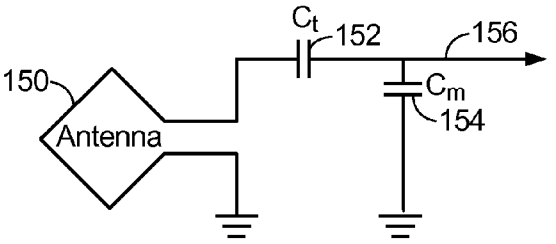


FIG. 3

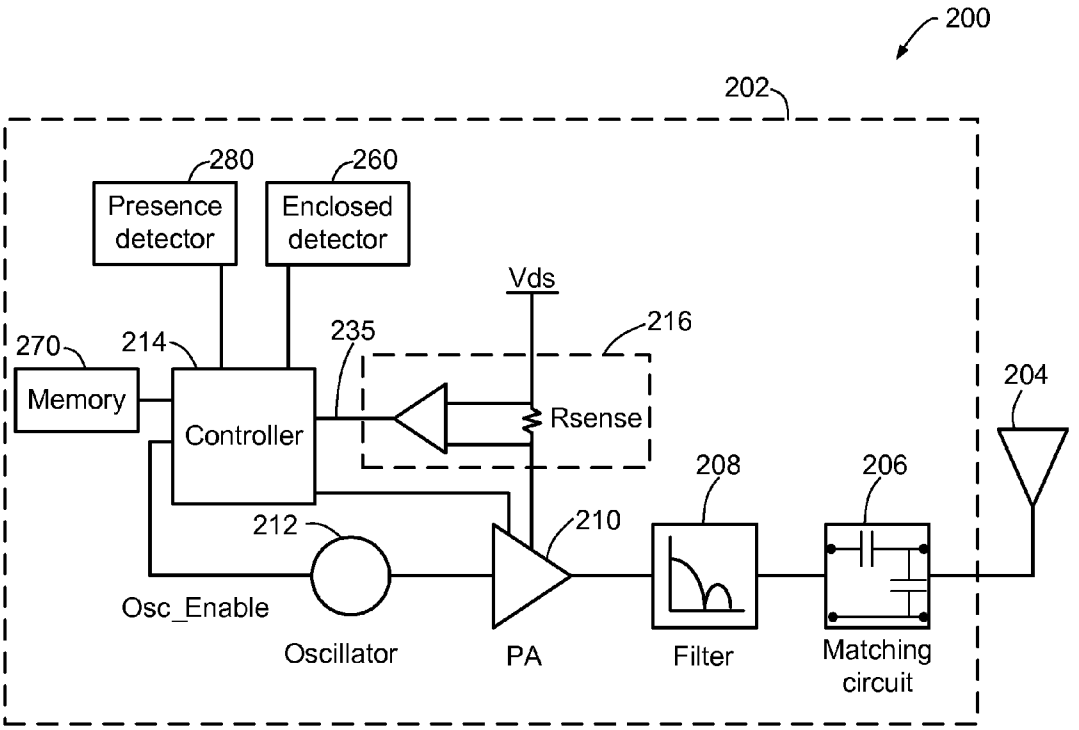
200
202
280
Presence detector
260
Enclosed detector
Vds
216
235
270
214
Memory
Controller
Rsense
204
208
206
212
210
Osc_Enable
Oscillator
PA
Filter
Matching circuit

FIG. 4

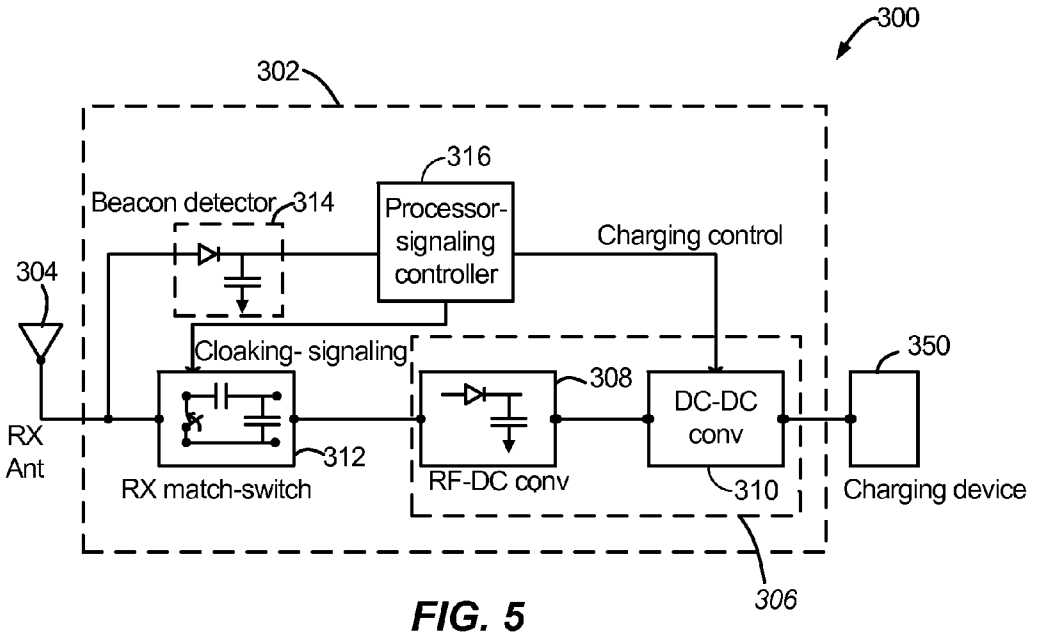
300
302
316
Beacon detector
314
Processor-signaling controller
Charging control
304
Cloaking- signaling
350
308
DC-DC conv
RX Ant
312
RX match-switch
RF-DC conv
310
Charging device
306

FIG. 5

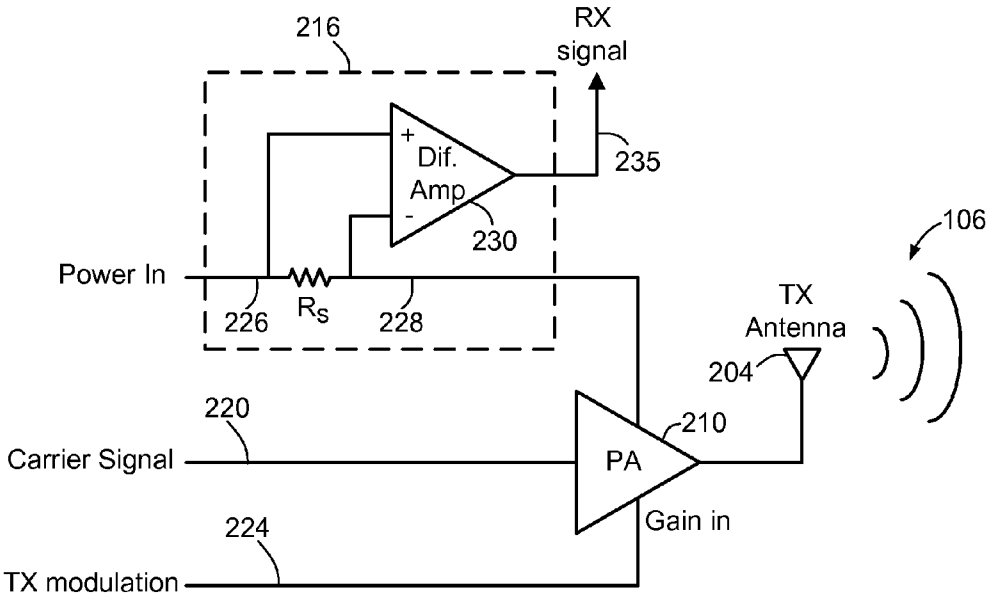
216
RX
signal
+
Dif.
Amp
-
235
230
106
Power In
226
Rs
228
TX
Antenna
204
220
210
Carrier Signal
PA
Gain in
224
TX modulation

*FIG. 6*

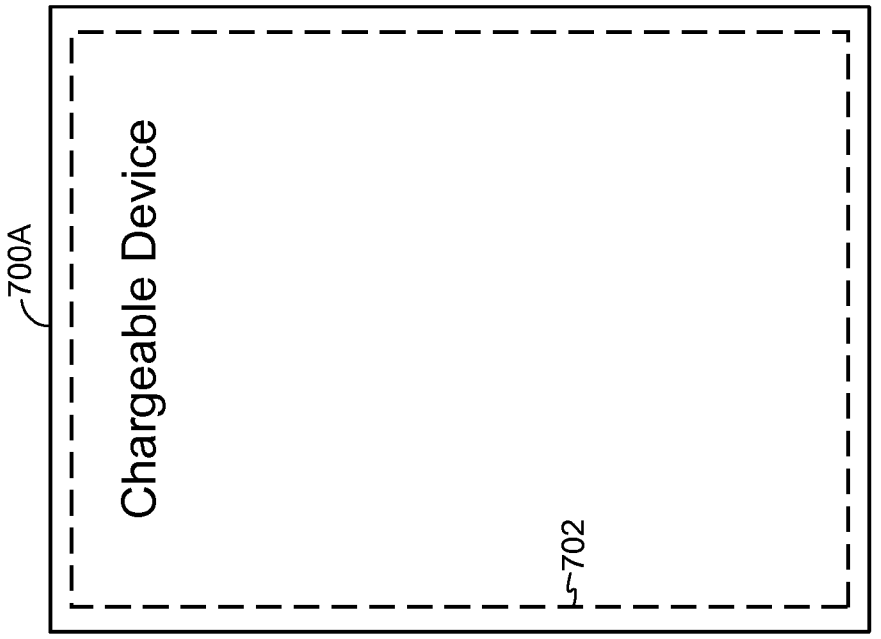
700A
Chargeable Device
702

FIG. 8

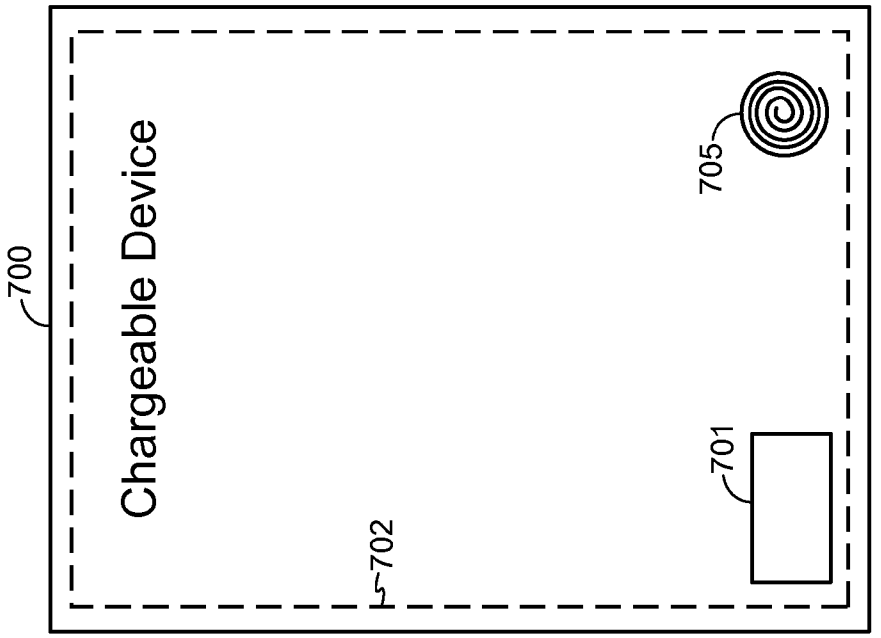
700
Chargeable Device
702
701
705

FIG. 7

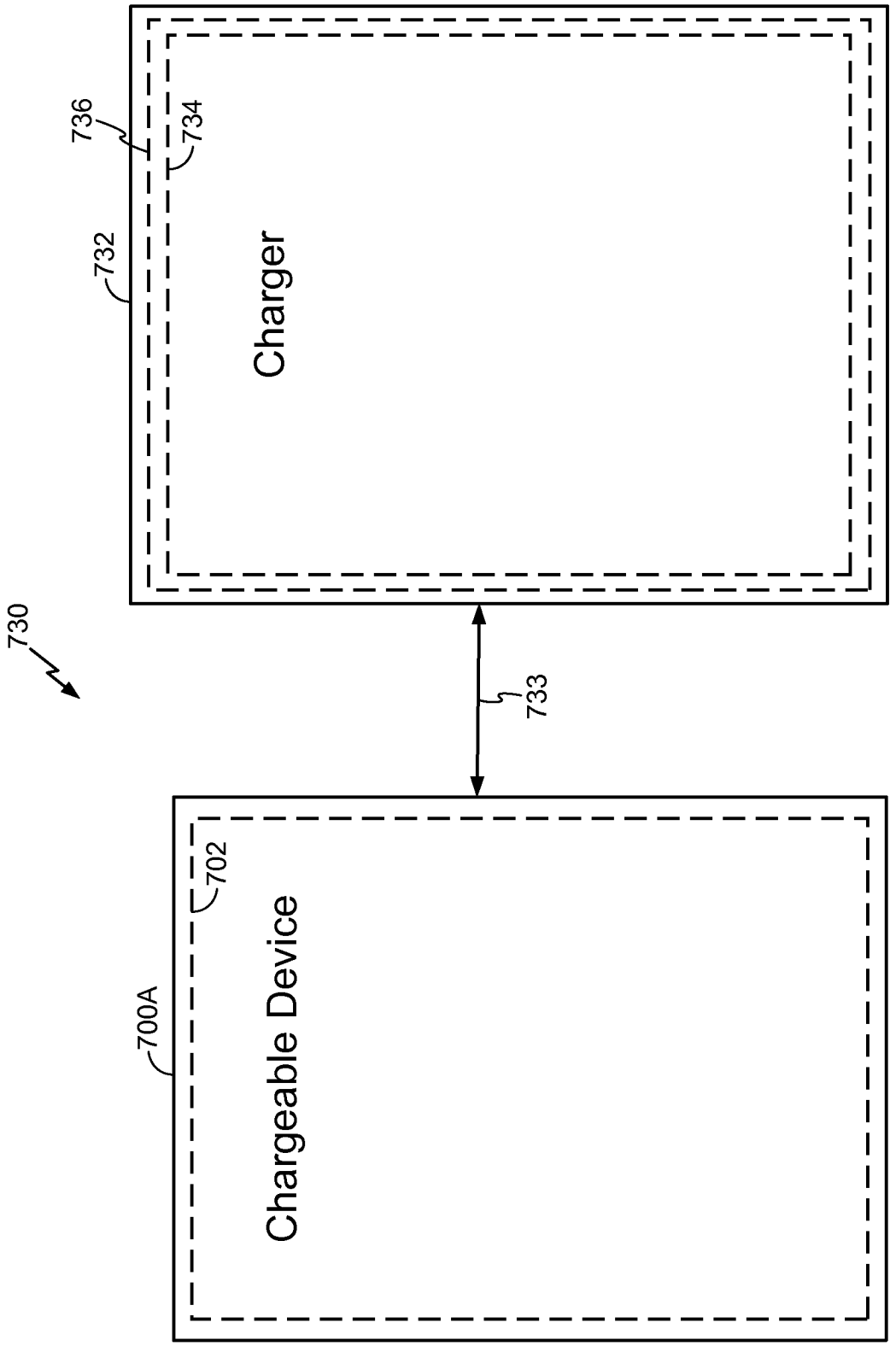


FIG. 9

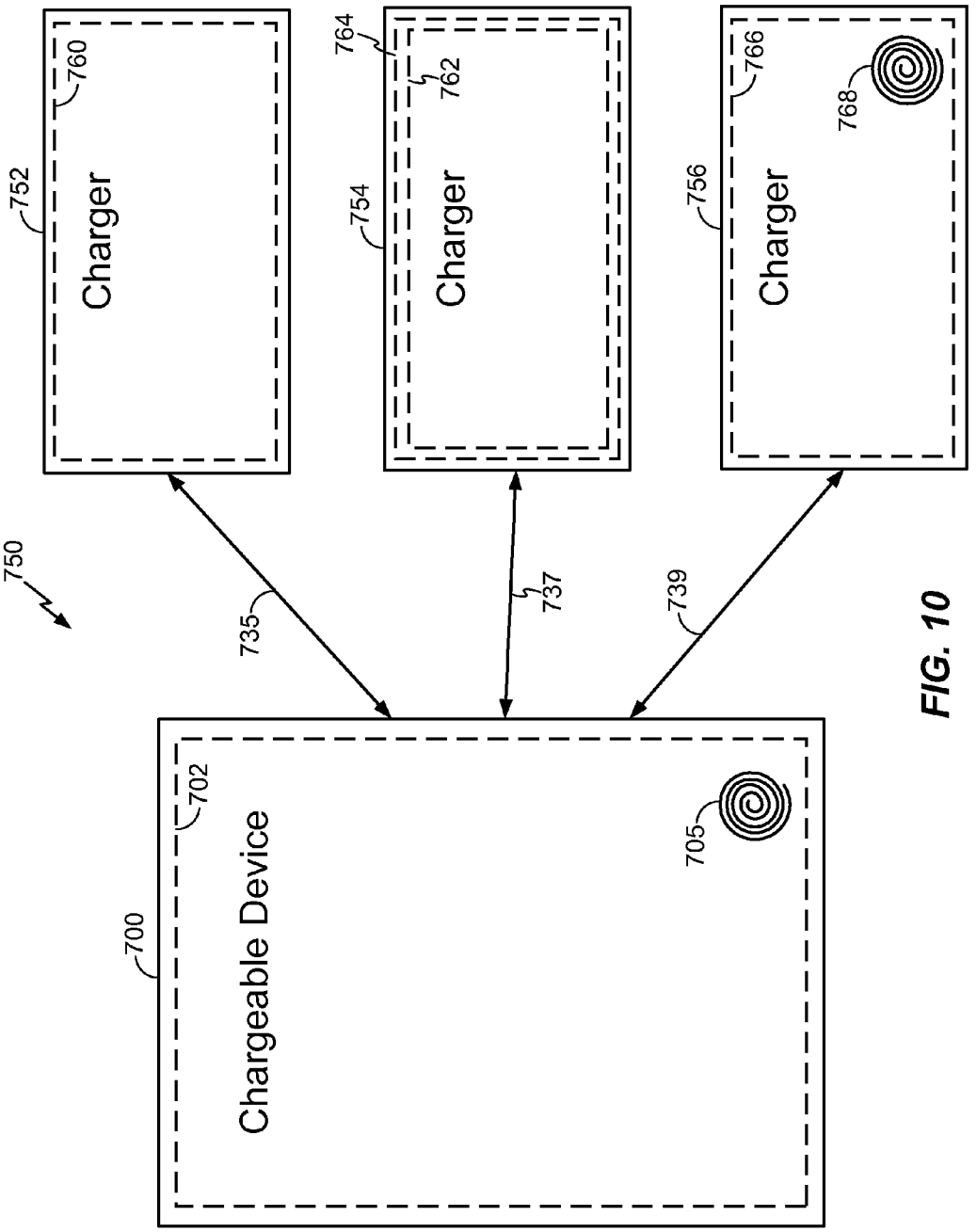
750
752
760
Charger
754
764
762
Charger
756
766
768
Charger
735
737
739
700
702
Chargeable Device
705

FIG. 10

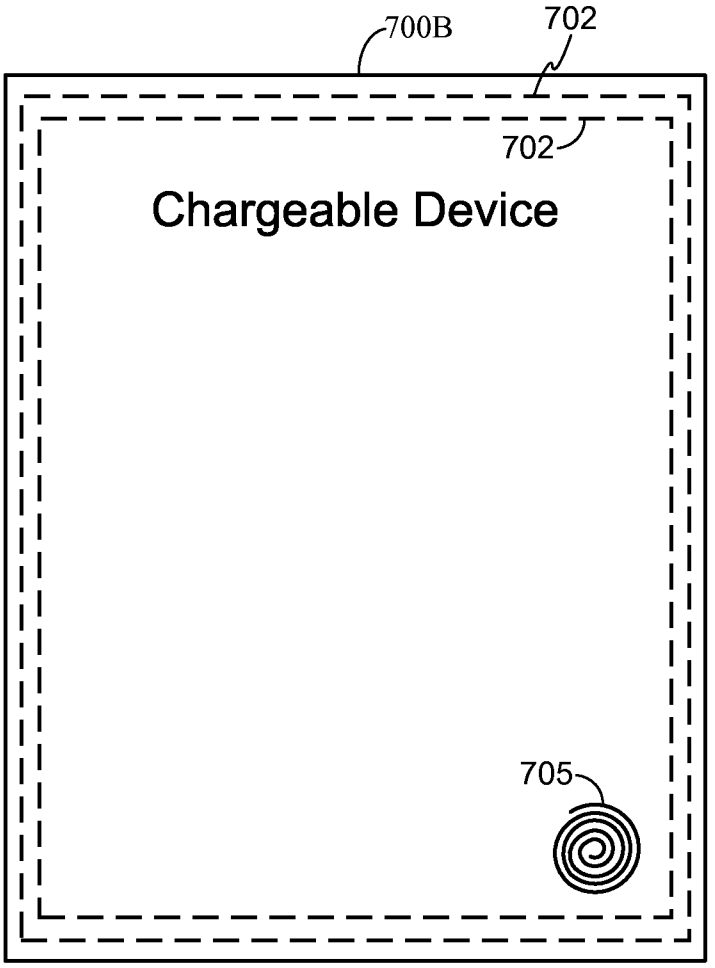


*FIG. 11*

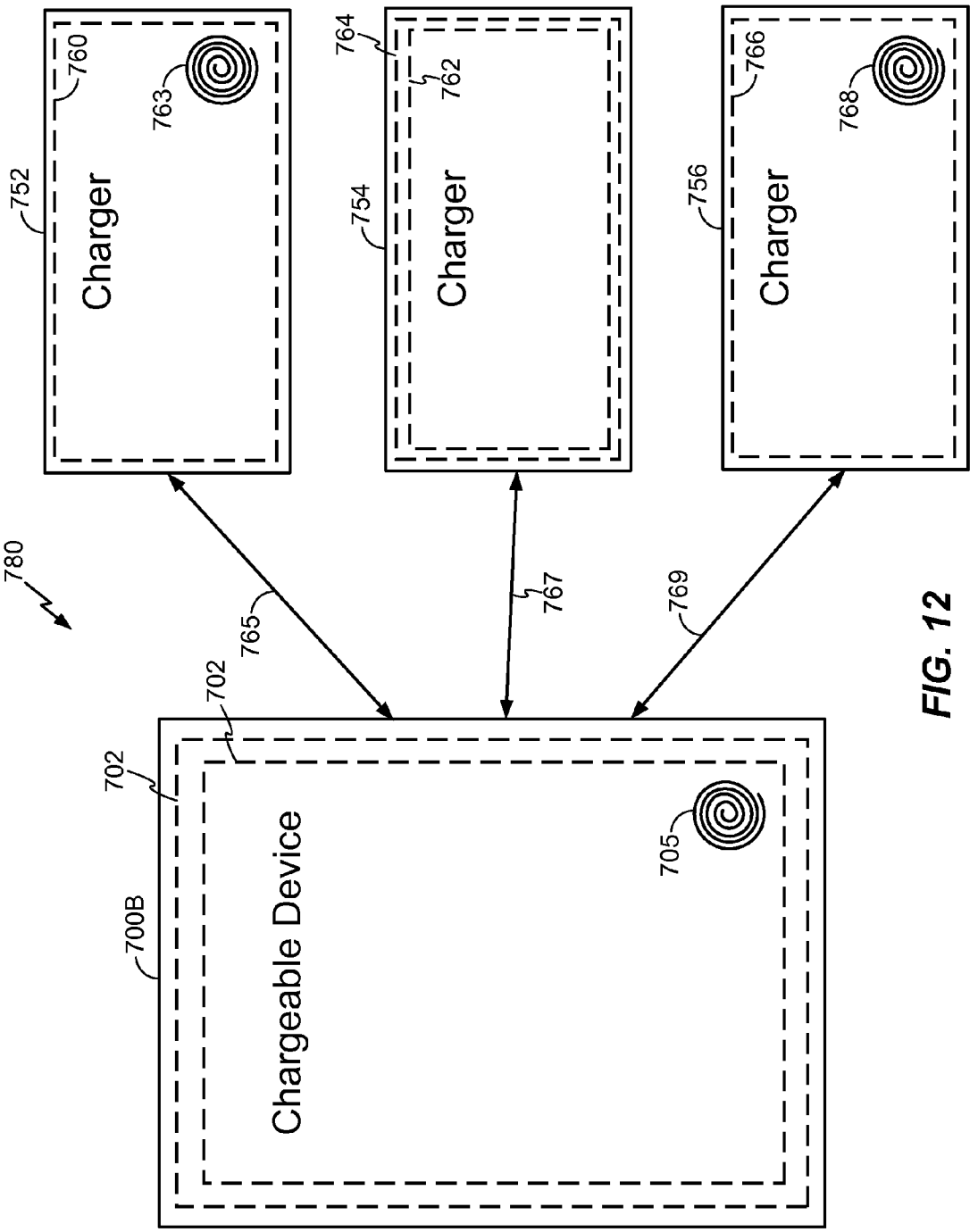
780
752
760
763
Charger
754
764
762
Charger
756
766
768
Charger
765
767
769
702
702
700B
Chargeable Device
705

FIG. 12

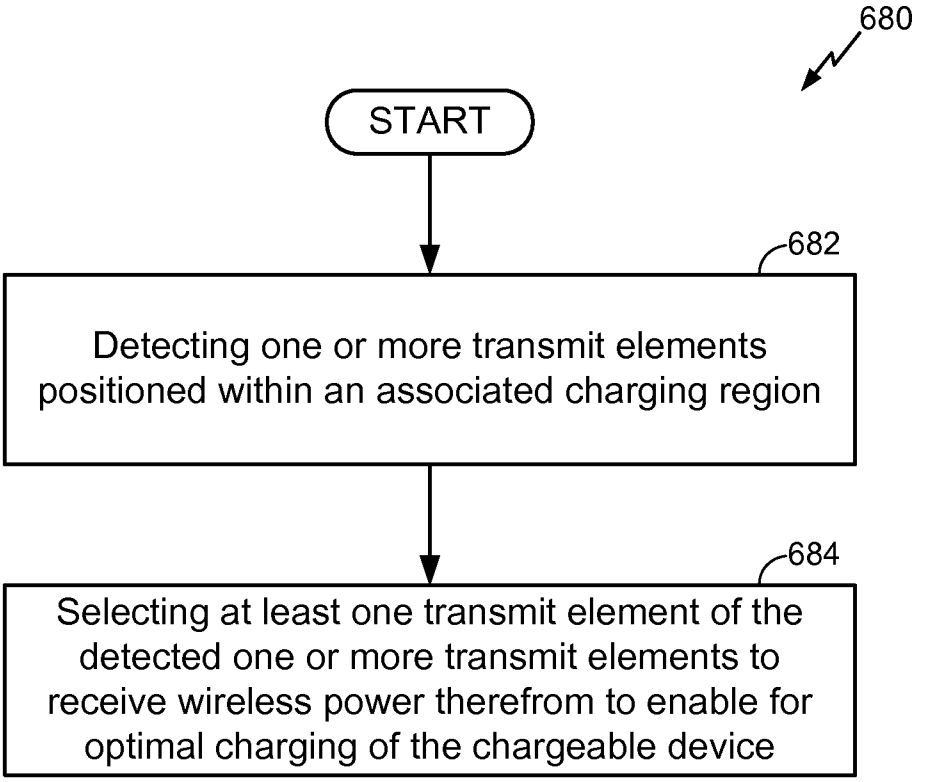
680
START
682
Detecting one or more transmit elements positioned within an associated charging region
684
Selecting at least one transmit element of the detected one or more transmit elements to receive wireless power therefrom to enable for optimal charging of the chargeable device

*FIG. 13*

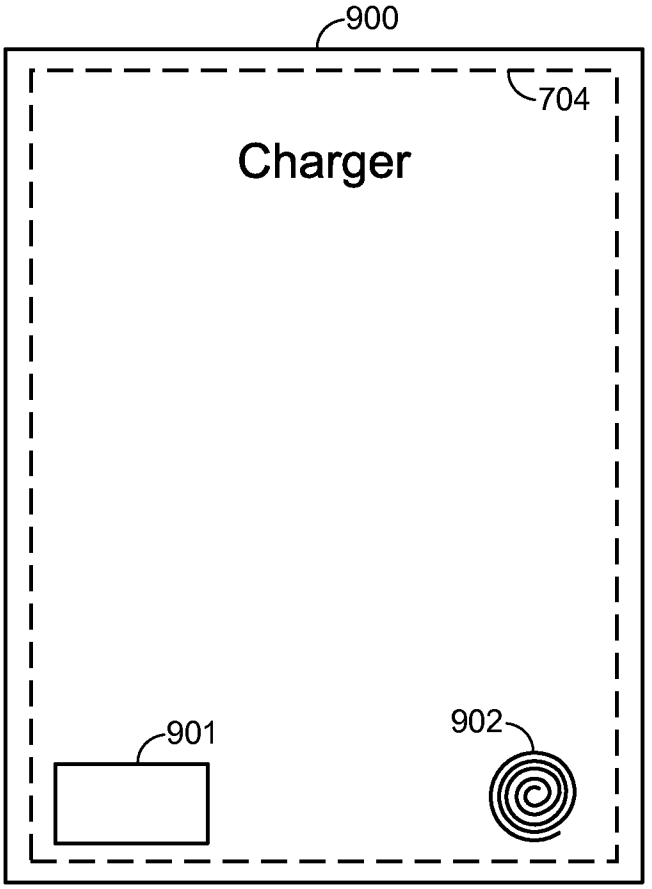


*FIG. 14*

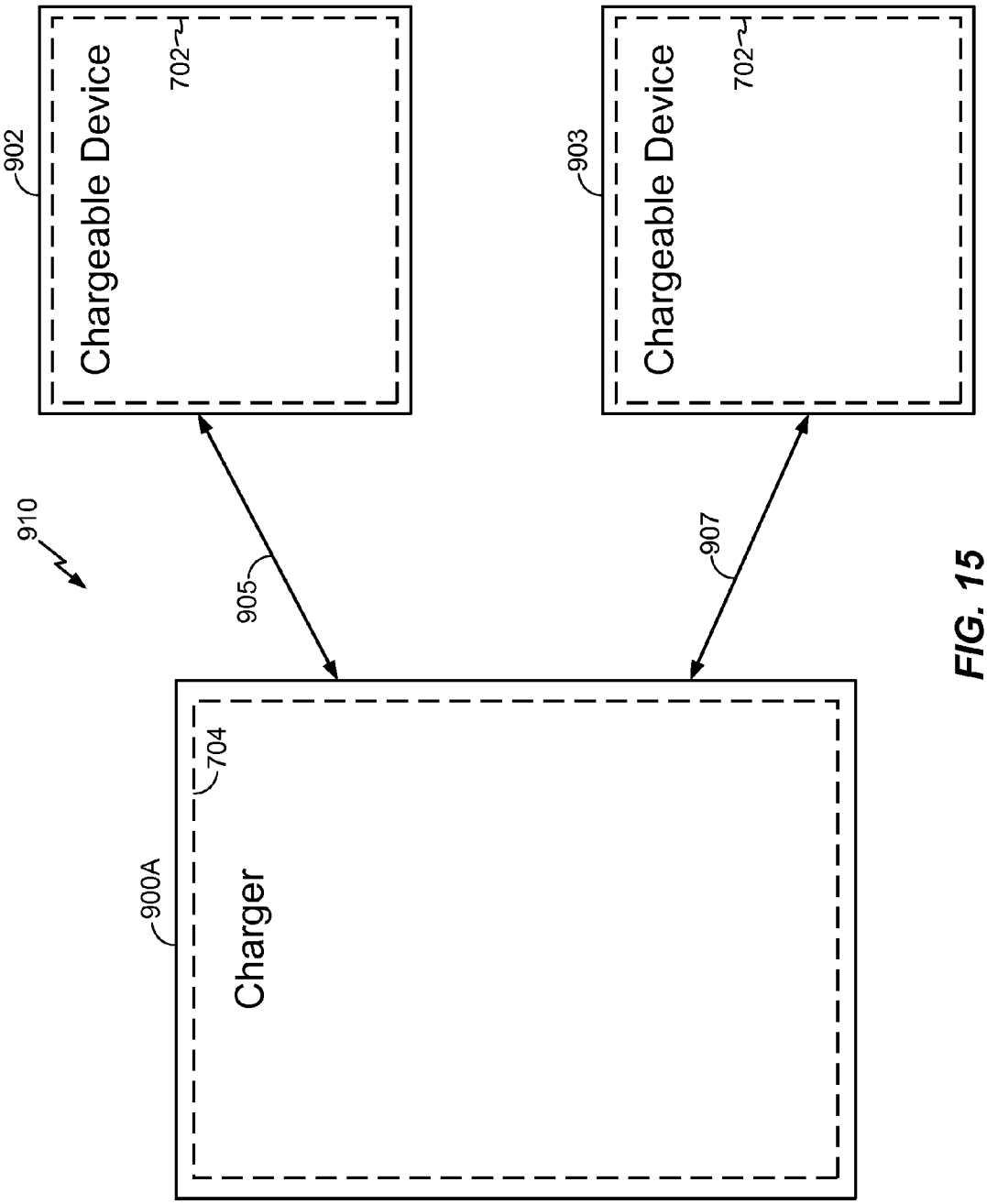
910
902
Chargeable Device
702
903
Chargeable Device
702
905
907
900A
Charger
704

FIG. 15

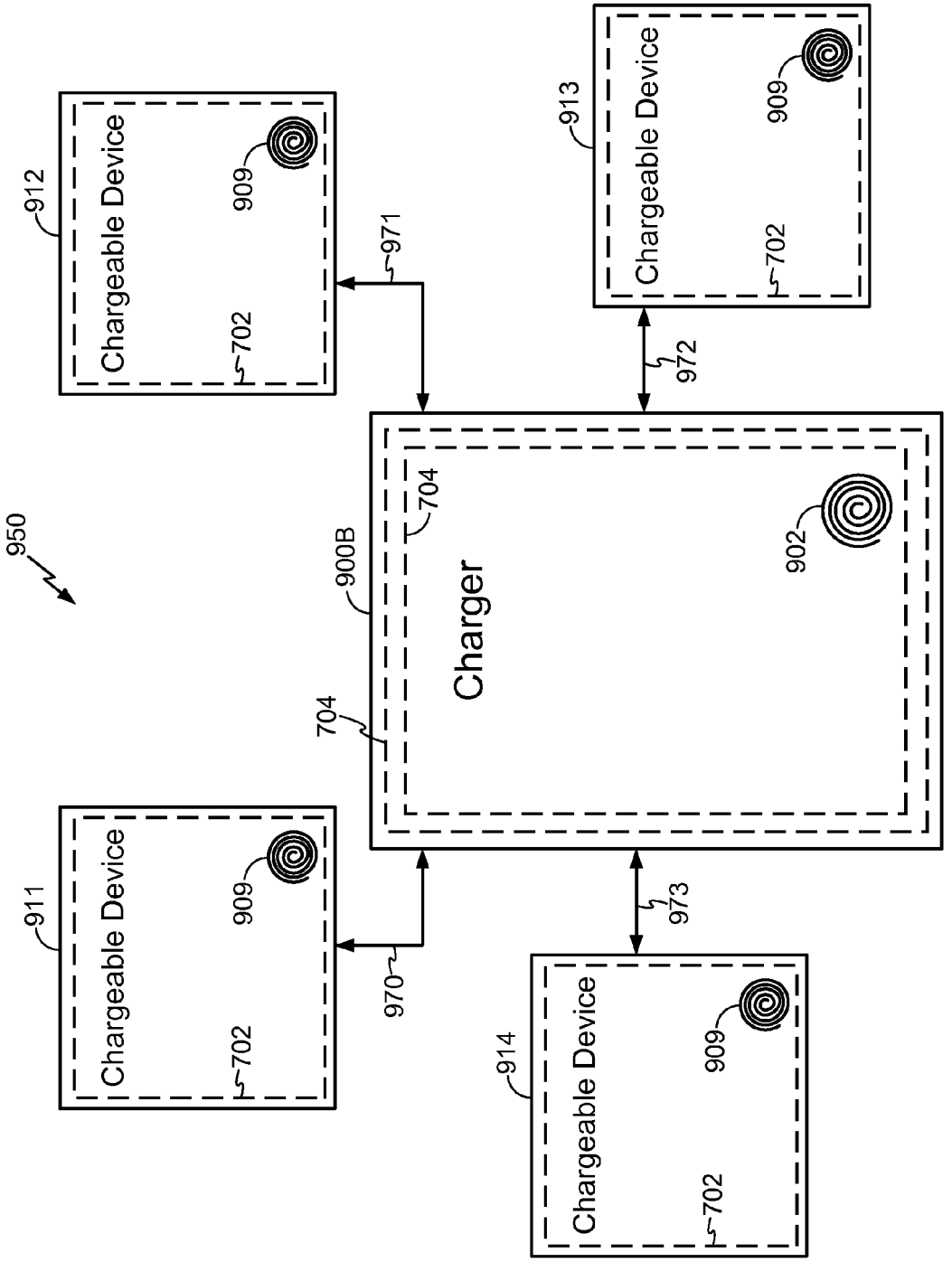
950
912
Chargeable Device
909
702
971
913
Chargeable Device
909
702
972
900B
704
Charger
902
704
911
Chargeable Device
909
702
970
973
914
Chargeable Device
909
702

FIG. 16

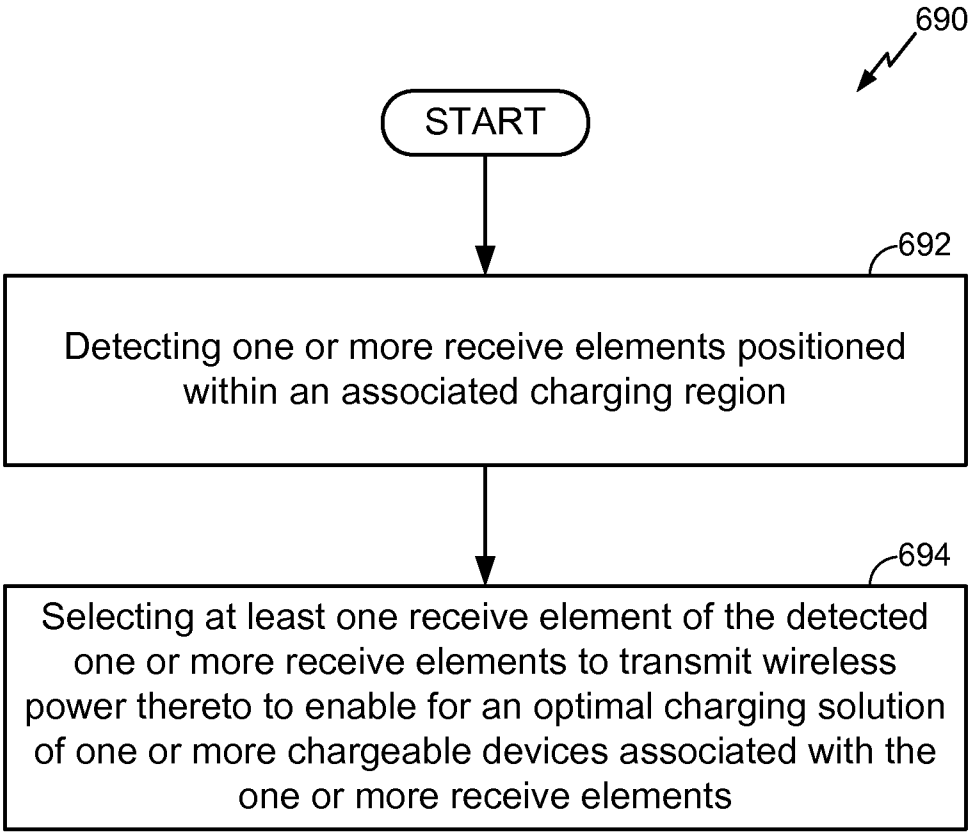
690
START
692
Detecting one or more receive elements positioned within an associated charging region
694
Selecting at least one receive element of the detected one or more receive elements to transmit wireless power thereto to enable for an optimal charging solution of one or more chargeable devices associated with the one or more receive elements

*FIG. 17*

# WIRELESS POWER FOR CHARGEABLE AND CHARGING DEVICES

## CLAIM OF PRIORITY UNDER 35 U.S.C. §119

This application claims priority under 35 U.S.C. §119(e) to:

U.S. Provisional Patent Application 61/152,359 entitled "UNIVERSAL WIRELESS AND WIRED CHARGER (MULTI-FREQUENCY, MULTI-VERSION AND MULTI-REVISION)" filed on Feb. 13, 2009, the disclosure of which is hereby incorporated by reference in its entirety.

## BACKGROUND

1. Field

The present invention relates generally to wireless electronic devices, and more specifically to electronic devices configured for wireless communication, wireless charging, and enabling for an optimal charging scenario.

2. Background

Typically, each battery powered device requires its own charger and power source, which is usually an AC power outlet. This becomes unwieldy when many devices need charging.

Approaches are being developed that use over the air power transmission between a transmitter and the device to be charged. These generally fall into two categories. One is based on the coupling of plane wave radiation (also called far-field radiation) between a transmit antenna and receive antenna on the device to be charged which collects the radiated power and rectifies it for charging the battery. Antennas may be of resonant length in order to improve the coupling efficiency. This approach suffers from the fact that the power coupling falls off quickly with distance between the antennas. So charging over reasonable distances (e.g., >1-2 m) becomes difficult. Additionally, since the system radiates plane waves, unintentional radiation can interfere with other systems if not properly controlled through filtering.

Other approaches are based on inductive coupling between a transmit antenna embedded, for example, in a "charging" mat or surface and a receive antenna plus rectifying circuit embedded in the host device to be charged. This approach has the disadvantage that the spacing between transmit and receive antennas must be very close (e.g. mms). Though this approach may have the capability to simultaneously charge multiple devices in the same area, this area is typically small, hence the user must locate the devices to a specific area.

A need exists for wireless power devices configured for detecting other wireless power devices and determining optimal charging solutions. More specifically, a need exists for a chargeable device configured to detect one or more wireless chargers and, thereafter, determine an optimal charging solution for receiving a charge. Further, a need exists for a wireless charger configured to detect one or more chargeable devices and, thereafter, determine an optimal charging solution for charging at least one of the one or more detected chargeable devices.

## BRIEF DESCRIPTION OF THE DRAWINGS

FIG. **1** shows a simplified block diagram of a wireless power transfer system.

FIG. **2** shows a simplified schematic diagram of a wireless power transfer system.

FIG. **3** shows a schematic diagram of a loop antenna for use in exemplary embodiments of the present invention.



FIG. **4** is a simplified block diagram of a transmitter, in accordance with an exemplary embodiment of the present invention.

FIG. **5** is a simplified block diagram of a receiver, in accordance with an exemplary embodiment of the present invention.

FIG. **6** shows a simplified schematic of a portion of transmit circuitry for carrying out messaging between a transmitter and a receiver.

FIG. **7** illustrates a chargeable device, in accordance with an exemplary embodiment of the present invention.

FIG. **8** illustrates another chargeable device, according to an exemplary embodiment of the present invention.

FIG. **9** illustrates a system including a wireless charger and a chargeable device, according to an exemplary embodiment of the present invention.

FIG. **10** illustrates a system including a plurality of wireless chargers and a chargeable device, in accordance with an exemplary embodiment of the present invention.

FIG. **11** illustrates a chargeable device having a plurality of receive antennas, according to an exemplary embodiment of the present invention.

FIG. **12** illustrates a system including a plurality of wireless chargers and a chargeable device having a plurality of receive antennas, according to an exemplary embodiment of the present invention.

FIG. **13** is a flowchart illustrating a method, according to an exemplary embodiment of the present invention.

FIG. **14** illustrates a wireless charger, according to an exemplary embodiment of the present invention.

FIG. **15** illustrates a system including a wireless charger and a plurality of chargeable devices, according to an exemplary embodiment of the present invention.

FIG. **16** illustrates another system including a wireless charger and a plurality of chargeable devices, in accordance with an exemplary embodiment of the present invention.

FIG. **17** is a flowchart illustrating another method, according to an exemplary embodiment of the present invention.

## DETAILED DESCRIPTION

The word "exemplary" is used herein to mean "serving as an example, instance, or illustration." Any embodiment described herein as "exemplary" is not necessarily to be construed as preferred or advantageous over other embodiments.

The detailed description set forth below in connection with the appended drawings is intended as a description of exemplary embodiments of the present invention and is not intended to represent the only embodiments in which the present invention can be practiced. The term "exemplary" used throughout this description means "serving as an example, instance, or illustration," and should not necessarily be construed as preferred or advantageous over other exemplary embodiments. The detailed description includes specific details for the purpose of providing a thorough understanding of the exemplary embodiments of the invention. It will be apparent to those skilled in the art that the exemplary embodiments of the invention may be practiced without these specific details. In some instances, well-known structures and devices are shown in block diagram form in order to avoid obscuring the novelty of the exemplary embodiments presented herein.

The words "wireless power" is used herein to mean any form of energy associated with electric fields, magnetic fields, electromagnetic fields, or otherwise that is transmitted between from a transmitter to a receiver without the use of physical electromagnetic conductors.

FIG. **1** illustrates a wireless transmission or charging system **100**, in accordance with various exemplary embodiments of the present invention. Input power **102** is provided to a transmitter **104** for generating a radiated field **106** for providing energy transfer. A receiver **108** couples to the radiated field **106** and generates an output power **110** for storing or consumption by a device (not shown) coupled to the output power **110**. Both the transmitter **104** and the receiver **108** are separated by a distance **112**. In one exemplary embodiment, transmitter **104** and receiver **108** are configured according to a mutual resonant relationship and when the resonant frequency of receiver **108** and the resonant frequency of transmitter **104** are very close, transmission losses between the transmitter **104** and the receiver **108** are minimal when the receiver **108** is located in the "near-field" of the radiated field **106**.

Transmitter **104** further includes a transmit antenna **114** for providing a means for energy transmission and receiver **108** further includes a receive antenna **118** for providing a means for energy reception. The transmit and receive antennas are sized according to applications and devices to be associated therewith. As stated, an efficient energy transfer occurs by coupling a large portion of the energy in the near-field of the transmitting antenna to a receiving antenna rather than propagating most of the energy in an electromagnetic wave to the far field. When in this near-field a coupling mode may be developed between the transmit antenna **114** and the receive antenna **118**. The area around the antennas **114** and **118** where this near-field coupling may occur is referred to herein as a coupling-mode region.

FIG. **2** shows a simplified schematic diagram of a wireless power transfer system. The transmitter **104** includes an oscillator **122**, a power amplifier **124** and a filter and matching circuit **126**. The oscillator is configured to generate a signal at a desired frequency, which may be adjusted in response to adjustment signal **123**. The oscillator signal may be amplified by the power amplifier **124** with an amplification amount responsive to control signal **125**. The filter and matching circuit **126** may be included to filter out harmonics or other unwanted frequencies and match the impedance of the transmitter **104** to the transmit antenna **114**.

The receiver **108** may include a matching circuit **132** and a rectifier and switching circuit **134** to generate a DC power output to charge a battery **136** as shown in FIG. **2** or power a device coupled to the receiver (not shown). The matching circuit **132** may be included to match the impedance of the receiver **108** to the receive antenna **118**. The receiver **108** and transmitter **104** may communicate on a separate communication channel **119** (e.g., Bluetooth, zigbee, cellular, etc).

As illustrated in FIG. **3**, antennas used in exemplary embodiments may be configured as a "loop" antenna **150**, which may also be referred to herein as a "magnetic" antenna. Loop antennas may be configured to include an air core or a physical core such as a ferrite core. Air core loop antennas may be more tolerable to extraneous physical devices placed in the vicinity of the core. Furthermore, an air core loop antenna allows the placement of other components within the core area. In addition, an air core loop may more readily enable placement of the receive antenna **118** (FIG. **2**) within a plane of the transmit antenna **114** (FIG. **2**) where the coupled-mode region of the transmit antenna **114** (FIG. **2**) may be more powerful.

As stated, efficient transfer of energy between the transmitter **104** and receiver **108** occurs during matched or nearly matched resonance between the transmitter **104** and the receiver **108**. However, even when resonance between the transmitter **104** and receiver **108** are not matched, energy may be transferred at a lower efficiency. Transfer of energy occurs by coupling energy from the near-field of the transmitting antenna to the receiving antenna residing in the neighborhood where this near-field is established rather than propagating the energy from the transmitting antenna into free space.

The resonant frequency of the loop or magnetic antennas is based on the inductance and capacitance. Inductance in a loop antenna is generally simply the inductance created by the loop, whereas, capacitance is generally added to the loop antenna's inductance to create a resonant structure at a desired resonant frequency. As a non-limiting example, capacitor **152** and capacitor **154** may be added to the antenna to create a resonant circuit that generates resonant signal **156**. Accordingly, for larger diameter loop antennas, the size of capacitance needed to induce resonance decreases as the diameter or inductance of the loop increases. Furthermore, as the diameter of the loop or magnetic antenna increases, the efficient energy transfer area of the near-field increases. Of course, other resonant circuits are possible. As another non-limiting example, a capacitor may be placed in parallel between the two terminals of the loop antenna. In addition, those of ordinary skill in the art will recognize that for transmit antennas the resonant signal **156** may be an input to the loop antenna **150**.

Exemplary embodiments of the invention include coupling power between two antennas that are in the near-fields of each other. As stated, the near-field is an area around the antenna in which electromagnetic fields exist but may not propagate or radiate away from the antenna. They are typically confined to a volume that is near the physical volume of the antenna. In the exemplary embodiments of the invention, magnetic type antennas such as single and multi-turn loop antennas are used for both transmit (Tx) and receive (Rx) antenna systems since magnetic near-field amplitudes tend to be higher for magnetic type antennas in comparison to the electric near-fields of an electric-type antenna (e.g., a small dipole). This allows for potentially higher coupling between the pair. Furthermore, "electric" antennas (e.g., dipoles and monopoles) or a combination of magnetic and electric antennas is also contemplated.

The Tx antenna can be operated at a frequency that is low enough and with an antenna size that is large enough to achieve good coupling (e.g., >−4 dB) to a small Rx antenna at significantly larger distances than allowed by far field and inductive approaches mentioned earlier. If the Tx antenna is sized correctly, high coupling levels (e.g., −2 to −4 dB) can be achieved when the Rx antenna on a host device is placed within a coupling-mode region (i.e., in the near-field) of the driven Tx loop antenna.

FIG. **4** is a simplified block diagram of a transmitter **200**, in accordance with an exemplary embodiment of the present invention. The transmitter **200** includes transmit circuitry **202** and a transmit antenna **204**. Generally, transmit circuitry **202** provides RF power to the transmit antenna **204** by providing an oscillating signal resulting in generation of near-field energy about the transmit antenna **204**. By way of example, transmitter **200** may operate at the 13.56 MHz ISM band.

Exemplary transmit circuitry **202** includes a fixed impedance matching circuit **206** for matching the impedance of the transmit circuitry **202** (e.g., **50** ohms) to the transmit antenna **204** and a low pass filter (LPF) **208** configured to reduce harmonic emissions to levels to prevent self-jamming of devices coupled to receivers **108** (FIG. **1**). Other exemplary embodiments may include different filter topologies, including but not limited to, notch filters that attenuate specific frequencies while passing others and may include an adaptive impedance match, that can be varied based on measurable

transmit metrics, such as output power to the antenna or DC current draw by the power amplifier. Transmit circuitry **202** further includes a power amplifier **210** configured to drive an RF signal as determined by an oscillator **212**. The transmit circuitry may be comprised of discrete devices or circuits, or alternately, may be comprised of an integrated assembly. An exemplary RF power output from transmit antenna **204** may be on the order of 2.5 Watts.

Transmit circuitry **202** further includes a controller **214** for enabling the oscillator **212** during transmit phases (or duty cycles) for specific receivers, for adjusting the frequency of the oscillator, and for adjusting the output power level for implementing a communication protocol for interacting with neighboring devices through their attached receivers.

The transmit circuitry **202** may further include a load sensing circuit **216** for detecting the presence or absence of active receivers in the vicinity of the near-field generated by transmit antenna **204**. By way of example, a load sensing circuit **216** monitors the current flowing to the power amplifier **210**, which is affected by the presence or absence of active receivers in the vicinity of the near-field generated by transmit antenna **204**. Detection of changes to the loading on the power amplifier **210** are monitored by controller **214** for use in determining whether to enable the oscillator **212** for transmitting energy to communicate with an active receiver.

Transmit antenna **204** may be implemented as an antenna strip with the thickness, width and metal type selected to keep resistive losses low. In a conventional implementation, the transmit antenna **204** can generally be configured for association with a larger structure such as a table, mat, lamp or other less portable configuration. Accordingly, the transmit antenna **204** generally will not need "turns" in order to be of a practical dimension. An exemplary implementation of a transmit antenna **204** may be "electrically small" (i.e., fraction of the wavelength) and tuned to resonate at lower usable frequencies by using capacitors to define the resonant frequency. In an exemplary application where the transmit antenna **204** may be larger in diameter, or length of side if a square loop, (e.g., **0.50** meters) relative to the receive antenna, the transmit antenna **204** will not necessarily need a large number of turns to obtain a reasonable capacitance.

The transmitter **200** may gather and track information about the whereabouts and status of receiver devices that may be associated with the transmitter **200**. Thus, the transmitter circuitry **202** may include a presence detector **280**, an enclosed detector **290**, or a combination thereof, connected to the controller **214** (also referred to as a processor herein). The controller **214** may adjust an amount of power delivered by the amplifier **210** in response to presence signals from the presence detector **280** and the enclosed detector **290**. The transmitter may receive power through a number of power sources, such as, for example, an AC-DC converter (not shown) to convert conventional AC power present in a building, a DC-DC converter (not shown) to convert a conventional DC power source to a voltage suitable for the transmitter **200**, or directly from a conventional DC power source (not shown).

As a non-limiting example, the presence detector **280** may be a motion detector utilized to sense the initial presence of a device to be charged that is inserted into the coverage area of the transmitter. After detection, the transmitter may be turned on and the RF power received by the device may be used to toggle a switch on the Rx device in a pre-determined manner, which in turn results in changes to the driving point impedance of the transmitter.

As another non-limiting example, the presence detector **280** may be a detector capable of detecting a human, for example, by infrared detection, motion detection, or other suitable means. In some exemplary embodiments, there may be regulations limiting the amount of power that a transmit antenna may transmit at a specific frequency. In some cases, these regulations are meant to protect humans from electromagnetic radiation. However, there may be environments where transmit antennas are placed in areas not occupied by humans, or occupied infrequently by humans, such as, for example, garages, factory floors, shops, and the like. If these environments are free from humans, it may be permissible to increase the power output of the transmit antennas above the normal power restrictions regulations. In other words, the controller **214** may adjust the power output of the transmit antenna **204** to a regulatory level or lower in response to human presence and adjust the power output of the transmit antenna **204** to a level above the regulatory level when a human is outside a regulatory distance from the electromagnetic field of the transmit antenna **204**.

As a non-limiting example, the enclosed detector **290** (may also be referred to herein as an enclosed compartment detector or an enclosed space detector) may be a device such as a sense switch for determining when an enclosure is in a closed or open state. When a transmitter is in an enclosure that is in an enclosed state, a power level of the transmitter may be increased.

In exemplary embodiments, a method by which the transmitter **200** does not remain on indefinitely may be used. In this case, the transmitter **200** may be programmed to shut off after a user-determined amount of time. This feature prevents the transmitter **200**, notably the power amplifier **210**, from running long after the wireless devices in its perimeter are fully charged. This event may be due to the failure of the circuit to detect the signal sent from either the repeater or the receive coil that a device is fully charged. To prevent the transmitter **200** from automatically shutting down if another device is placed in its perimeter, the transmitter **200** automatic shut off feature may be activated only after a set period of lack of motion detected in its perimeter. The user may be able to determine the inactivity time interval, and change it as desired. As a non-limiting example, the time interval may be longer than that needed to fully charge a specific type of wireless device under the assumption of the device being initially fully discharged.

FIG. **5** is a simplified block diagram of a receiver **300**, in accordance with an exemplary embodiment of the present invention. The receiver **300** includes receive circuitry **302** and a receive antenna **304**. Receiver **300** further couples to device **350** for providing received power thereto. It should be noted that receiver **300** is illustrated as being external to device **350** but may be integrated into device **350**. Generally, energy is propagated wirelessly to receive antenna **304** and then coupled through receive circuitry **302** to device **350**.

Receive antenna **304** is tuned to resonate at the same frequency, or near the same frequency, as transmit antenna **204** (FIG. **4**). Receive antenna **304** may be similarly dimensioned with transmit antenna **204** or may be differently sized based upon the dimensions of the associated device **350**. By way of example, device **350** may be a portable electronic device having diametric or length dimension smaller that the diameter of length of transmit antenna **204**. In such an example, receive antenna **304** may be implemented as a multi-turn antenna in order to reduce the capacitance value of a tuning capacitor (not shown) and increase the receive antenna's impedance. By way of example, receive antenna **304** may be placed around the substantial circumference of device **350** in order to maximize the antenna diameter and reduce the number of loop turns (i.e., windings) of the receive antenna and the inter-winding capacitance.

Receive circuitry **302** provides an impedance match to the receive antenna **304**. Receive circuitry **302** includes power conversion circuitry **306** for converting a received RF energy source into charging power for use by device **350**. Power conversion circuitry **306** includes an RF-to-DC converter **308** and may also in include a DC-to-DC converter **310**. RF-to-DC converter **308** rectifies the RF energy signal received at receive antenna **304** into a non-alternating power while DC-to-DC converter **310** converts the rectified RF energy signal into an energy potential (e.g., voltage) that is compatible with device **350**. Various RF-to-DC converters are contemplated, including partial and full rectifiers, regulators, bridges, doublers, as well as linear and switching converters.

Receive circuitry **302** may further include switching circuitry **312** for connecting receive antenna **304** to the power conversion circuitry **306** or alternatively for disconnecting the power conversion circuitry **306**. Disconnecting receive antenna **304** from power conversion circuitry **306** not only suspends charging of device **350**, but also changes the "load" as "seen" by the transmitter **200** (FIG. **2**).

As disclosed above, transmitter **200** includes load sensing circuit **216** which detects fluctuations in the bias current provided to transmitter power amplifier **210**. Accordingly, transmitter **200** has a mechanism for determining when receivers are present in the transmitter's near-field.

When multiple receivers **300** are present in a transmitter's near-field, it may be desirable to time-multiplex the loading and unloading of one or more receivers to enable other receivers to more efficiently couple to the transmitter. This "unloading" of a receiver is also known herein as a "cloaking" A receiver may also be cloaked in order to eliminate coupling to other nearby receivers or to reduce loading on nearby transmitters. Furthermore, this switching between unloading and loading as controlled by receiver **300** and detected by transmitter **200** provides a communication mechanism from receiver **300** to transmitter **200** as is explained more fully below. Additionally, a protocol can be associated with the switching which enables the sending of a message from receiver **300** to transmitter **200**. By way of example, a switching speed may be on the order of 100 μsec.

In an exemplary embodiment, communication between the transmitter and the receiver refers to a device sensing and charging control mechanism, rather than conventional two-way communication. In other words, the transmitter uses, for example, on/off keying of the transmitted signal to adjust whether energy is available in the near-filed. The receivers interpret these changes in energy as a message from the transmitter. From the receiver side, the receiver uses tuning and de-tuning of the receive antenna to adjust how much power is being accepted from the near-field. The transmitter can detect this difference in power used from the near-field and interpret these changes as signal forming a message from the receiver.

Receive circuitry **302** may further include signaling detector and beacon circuitry **314** used to identify received energy fluctuations, which may correspond to informational signaling from the transmitter to the receiver. Furthermore, signaling and beacon circuitry **314** may also be used to detect the transmission of a reduced RF signal energy (i.e., a beacon signal) and to rectify the reduced RF signal energy into a nominal power for awakening either un-powered or power-depleted circuits within receive circuitry **302** in order to configure receive circuitry **302** for wireless charging.

Receive circuitry **302** further includes processor **316** for coordinating the processes of receiver **300** described herein including the control of switching circuitry **312** described herein. Cloaking of receiver **300** may also occur upon the occurrence of other events including detection of an external wired charging source (e.g., wall/USB power) providing charging power to device **350**. Processor **316**, in addition to controlling the cloaking of the receiver, may also monitor beacon circuitry **314** to determine a beacon state and extract messages sent from the transmitter. Processor **316** may also adjust DC-to-DC converter **310** for improved performance.

FIG. **6** shows a simplified schematic of a portion of transmit circuitry for carrying out messaging between a transmitter and a receiver. In some exemplary embodiments of the present invention, a means for communication may be enabled between the transmitter and the receiver. In FIG. **6** a power amplifier **210** drives the transmit antenna **204** to generate the radiated field. The power amplifier is driven by a carrier signal **220** that is oscillating at a desired frequency for the transmit antenna **204**. A transmit modulation signal **224** is used to control the output of the power amplifier **210**.

The transmit circuitry can send signals to receivers by using an ON/OFF keying process on the power amplifier **210**. In other words, when the transmit modulation signal **224** is asserted, the power amplifier **210** will drive the frequency of the carrier signal **220** out on the transmit antenna **204**. When the transmit modulation signal **224** is deactivated, the power amplifier will not drive any signal on the transmit antenna **204**.

The transmit circuitry of FIG. **6** also includes a load sensing circuit **216** that supplies power to the power amplifier **210** and generates a receive signal **235**. In the load sensing circuit **216**, a voltage drop across resistor $R_s$ develops between the power in signal **226** and the power supply **228** to the power amplifier **210**. Any change in the power consumed by the power amplifier **210** will cause a change in the voltage drop that will be amplified by differential amplifier **230**. When the transmit antenna is in coupled mode with a receive antenna in a receiver (not shown in FIG. **6**) the amount of current drawn by the power amplifier **210** will change. In other words, if no coupled mode resonance exist for the transmit antenna **204**, the power required to drive the radiated field will be a first amount. If a coupled mode resonance exists, the amount of power consumed by the power amplifier **210** will go up because much of the power is being coupled into the receive antenna. Thus, the receive signal **235** can indicate the presence of a receive antenna coupled to the transmit antenna **235** and can also detect signals sent from the receive antenna. Additionally, a change in receiver current draw will be observable in the transmitter's power amplifier current draw, and this change can be used to detect signals from the receive antennas.

Details of some exemplary embodiments for cloaking signals, beacon signals, and circuits for generating these signals can be seen in U.S. Utility patent application Ser. No. 12/249,873, entitled "REVERSE LINK SIGNALING VIA RECEIVE ANTENNA IMPEDANCE MODULATION" filed on Oct. 10, 2008; and in U.S. Utility patent application Ser. No. 12/249,861, entitled "TRANSMIT POWER CONTROL FOR A WIRELESS CHARGING SYSTEM" filed on Oct. 10, 2008, both herein incorporated by reference in their entirety.

Details of exemplary communication mechanisms and protocols can be seen in U.S. Utility patent application Ser. No. 12/249,866 entitled "SIGNALING CHARGING IN WIRELESS POWER ENVIRONMENT" filed on Oct. 10, 2008, the contents of which is incorporated by reference herein in its entirety.

FIG. **7** depicts a chargeable device **700** that may comprise any known and suitable chargeable device. As non-limiting examples, chargeable device **700** may comprise a cellular

telephone, a portable media player, a camera, a gaming device, a navigation device, a headset (e.g., a Bluetooth headset), a tool, a toy, or any combination thereof. Chargeable device **700** may include at least one receive antenna **702**, at least one coil **705**, or any combination thereof. Each of receive antenna **702** and coil **705** may be configured to receive power wirelessly transmitted from a suitable wireless power source. More specifically, according to one exemplary embodiment, antenna **702** and an associated receiver, such as receiver **108** of FIG. **2**, may be configured to receive wireless power transmitted from a wireless power source within an associated near-field region. Further, according to another exemplary embodiment, coil **705** and an associated receiver, such as receiver **108** of FIG. **2**, may be configured to receive wireless power transmitted from a wireless power source via inductive coupling. Additionally, chargeable device **700** may be configured to store received power within a battery (e.g., battery **136** of FIG. **2**) of chargeable device **700**. It is noted that the terms "receive antenna" and "coil" may each be referred to herein as a "receive element."

Furthermore, in accordance with various exemplary embodiments, chargeable device **700** may be configured to detect one or more wireless chargers, which are positioned within a charging region of chargeable device **700** and include one or more wireless transmit elements (e.g., a wireless transmit antenna or a coil). More specifically, chargeable device **700** may be configured to detect one or more wireless chargers according to one or more specific protocols and/or one or more specific frequencies. For example only, chargeable device **700** may be configured to detect one or more wireless chargers by sampling for wireless chargers operating with one or more specific wireless charging protocols, sampling for wireless chargers resonating at one more specific frequencies, or both. As described more fully below, upon detection of a wireless charger, chargeable device **700** may be configured to determine an amount of power received from the detected wireless charger, including at each frequency and with each protocol that the detected wireless charger is configured to transmit.

According to one exemplary embodiment, chargeable device **700** may be configured to detect a wireless charger, which is positioned within a near-field region of chargeable device **700** and is configured to wirelessly transmit power at one or more suitable frequencies (e.g., unlicensed ISM bands) via a near-field resonance protocol. It is noted that various frequencies may be suitable for wireless power transmission in one location (e.g., a first country) but not suitable in another location (e.g., a second country). As such, according to one exemplary embodiment, chargeable device **700** may be configured to determine its location via a location device **701**, and, thereafter, determine which one or more frequencies are suitable for wireless power transmission. For example only, location device **701** may comprise a Global Positioning System (GPS) device. By way of example only, chargeable device **700** may be configured to detect a wireless charger positioned within an associated near-field region and configured to transmit wireless power, via near-field resonance, at one or more of 6.78 MHz, 13.56 MHz, 27.12, and 40.68 MHz. Further, according to one exemplary embodiment, chargeable device **700** may be configured to detect a wireless charger positioned within an associated charging region and configured to convey wireless power via an inductive coupling protocol.

Moreover, chargeable device **700** may be configured to establish a communication link with a detected wireless charger and, upon establishing the communication link, may wirelessly receive data (e.g., audio files, data files, or video files) from the detected wireless charger, wirelessly transmit data to the detected wireless charger, or both. It is noted that chargeable device **700** may be configured to detect and receive wireless power from multiple versions of wireless chargers. It is noted further that chargeable device **700** may be configured to identify a version of a detected wireless charger and, as a result, may receive wireless power from and communicate with the detected wireless charger accordingly. Additionally, upon establishing the communication link, chargeable device **700** may be configured to control an operation of a detected wireless charger (e.g., transmission of power, synchronization of data, displaying media, or any user-interface functionality).

Upon detection of one or more wireless chargers, chargeable device **700** may be further configured to select at least one of the detected one or more wireless charging to receive power therefrom for optimizing an amount of power received by chargeable device **700**. A method of optimizing an amount of power received by chargeable device **700** may be based on at least one of one or more charging protocols of each detected wireless charger, one or more charging frequencies of each detected wireless charger, a position of each detected wireless charger relative to chargeable device **700**, and a version of each detected wireless charger. It is noted that relatively small chargeable devices (e.g., a Bluetooth headset) may charge more efficiently at a higher frequency (e.g., 40.68 MHz) in comparison to a lower frequency (6.78 MHz). On the other hand, relatively large chargeable devices (e.g., a camera) may charge more efficiently at a lower frequency (e.g., 6.78 MHz) in comparison to a higher frequency (40.68 MHz).

FIG. **8** illustrates a chargeable device **700**A, which is similar to chargeable device **700** of FIG. **7** and, therefore, will not be explained again. However, in FIG. **8**, chargeable device **700**A does not include a coil and only includes one receive antenna **702**. It is noted that in an embodiment wherein chargeable device **700**A includes a single receive element (i.e., receive antenna **702**), chargeable device **700**A may be configured to receive wireless power from only one wireless transmit element at any one time. Accordingly, in this exemplary embodiment, chargeable device **700**A may be configured to determine which detected wireless charger may enable for optimal charging. Stated another way, chargeable device **700**A may be configured to determine which detected wireless charger and, more specifically, which transmit element of the one or more detected wireless chargers may enable for maximum efficiency, maximum charging rate, minimum interference, or any combination thereof. Further, according to another exemplary embodiment, chargeable device **700**A may be configured to determine which plurality of transmit elements of the one or more detected wireless chargers, utilizing a time domain multiplexing method based upon allocated activation time slots for each selected transmit element, may enable for maximum efficiency, maximum charging rate, minimum interference, or any combination thereof.

FIG. **9** illustrates a system **730** including chargeable device **700**A and a wireless charger **732**. Wireless charger **732** includes a first transmit antenna **734** configured to transmit wireless power at a frequency of, for example only, 13.56 MHz. Further, wireless charger **732** includes a second transmit antenna **736** configured to transmit wireless power at a frequency of, for example only, 6.78 MHz. According to one contemplated operation of system **730**, chargeable device **700** may detect wireless charger **732**, which is positioned within an associated charging region and operating with one or more specific protocols (e.g., near-field resonance) and/or resonating at one or more specific frequencies (e.g., 6.78 MHz and

13.56 MHz). Further, upon detection of wireless charger **732**, a communication link **733** between chargeable device **700**A and wireless charger **732** may be established. Moreover, after wireless charger **732** has been detected, an optimal scenario for charging chargeable device **700**A with wireless charger **732** may be determined.

According to one exemplary embodiment, determining an optimal charging scenario may include determining which single protocol (i.e., either near-field resonance via transmit antenna **734** or near-field resonance via transmit antenna **736**) enables for optimal charging (e.g., maximum efficiency, maximum charging rate, minimum interference, or any combination thereof) of chargeable device **700**A. As an example, chargeable device **700**A, wireless charger **732**, or a combination thereof, may determine that transmit antenna **736** enables for optimal charging of chargeable device **700**A. As a more specific example, chargeable device **700**A may receive wireless power from transmit antenna **734** at a first frequency (e.g., 13.56 MHz.), determine an amount of power received from transmit antenna **734** and, thereafter, provide this information to wireless charger **732**. Further, chargeable device **700**A may receive wireless power from transmit antenna **736** at a second frequency (e.g., 6.78 MHz.), determine an amount of power received from transmit antenna **736** and, thereafter, provide this information to wireless charger **732**. Wireless charger **732** may then inform chargeable device **700**A, via communication link **733**, which protocol (i.e., either near-field resonance via transmit antenna **734** or near-field resonance via transmit antenna **736**) facilitates optimal charging by wireless charger **732**. After determining which transmit element facilitates optimal charging, chargeable device **700**A, wireless charger **732**, or a combination thereof, may select the transmit element, and wireless power may be transmitted to chargeable device **700**A.

It is noted that upon receiving information from chargeable device **700**A relating to an amount of power received from a specific transmit element (e.g., transmit antenna **734** or transmit antenna **736**), wireless charger **732** may be configured to increase or decrease an amount of power transmitted from the specific transmit element. It is further noted that depending on the type of device (i.e., whether chargeable device **700**A is, for example only, a mobile telephone, a media player, or a Bluetooth headset) and/or a type of battery within chargeable device **700**A, wireless charger **732** may be configured to increase or decrease an amount of power transmitted from a specific transmit element.

According to another exemplary embodiment, determining an optimal charging scenario may include determining which plurality of transmit elements, utilizing a time domain multiplexing method, may provide for optimal charging. As an example, chargeable device **700**A, wireless charger **732**, or a combination thereof, may determine that transmit antenna **734** may be time multiplexed with transmit antenna **736** to enable for optimized charging of chargeable device **700**A.

FIG. **10** illustrates another system **750** including chargeable device **700**. System **750** further includes a first wireless charger **752**, a second wireless charger **754**, and a third wireless charger **756**, each of which is positioned within an associated charging region of chargeable device **700**. As illustrated in FIG. **10**, first wireless charger **752** includes a transmit antenna **760** and may be configured to transmit wireless power at a frequency of, for example only, 40.68 MHz. Further, second wireless charger **754** includes a first transmit antenna **762** configured to transmit wireless power at a frequency of, for example only, 27.12 MHz., and a second transmit antenna **764** configured to transmit wireless power at a frequency of, for example only, 6.78 MHz. Moreover, third wireless charger **756** includes a transmit antenna **766** configured to transmit wireless power at a frequency of, for example only, 13.56 MHz. Third wireless charger **756** further includes a coil **768** configured to transmit power, via inductive coupling, to a coil (e.g., coil **705**) adequately aligned therewith.

According to one contemplated operation of system **750**, chargeable device **700** may detect one or more wireless chargers positioned within an associated charging region and operating with one or more specific protocols (e.g., near-field resonance and/or inductive coupling) and/or resonating at one or more specific frequencies (e.g., unlicensed ISM bands). Accordingly, chargeable device **700** may detect each of first wireless charger **752**, second wireless charger **754**, and third wireless charger **756**. Moreover, upon detection, respective communication links **735**, **737**, and **739** may be established between chargeable device **700** and first wireless charger **752**, second wireless charger **754**, and third wireless charger **756**.

Furthermore, upon detection of first wireless charger **752**, second wireless charger **754**, and third wireless charger **756**, an optimal charging scenario for charging chargeable device **700** may be determined. Determining an optimal charging scenario may include, as noted above, determining an optimal charging scenario for one or more detected wireless chargers that may include one or more protocols and/or are configured to transmit wireless power at one or more frequencies. Furthermore, determining an optimal charging scenario may include determining which plurality of transmit elements within one or more detected wireless chargers, utilizing a time domain multiplexing method, may provide for optimal charging. For example, according to one exemplary embodiment, chargeable device **700** may be configured to sequentially receive wireless power from each individual transmit element within system **750**. Further, after receiving wireless power from each individual transmit element within system **750**, chargeable device **700** may be configured to determine which one or more transmit elements enable for optimal charging.

More specifically, for example, receive antenna **702** may be configured to receive wireless power from transmit antenna **760**, via near-field resonance, at a frequency (e.g., 40.68 MHz.), and an amount of power received from transmit antenna **760** may be determined by chargeable device **700**. In addition, receive antenna **702** may be configured to receive wireless power from transmit antenna **762**, via near-field resonance, at a frequency (e.g., 27.12 MHz.), and chargeable device **700** may determine an amount of power received from transmit antenna **762**. Further, receive antenna **702** may be configured to receive wireless from power transmit antenna **764**, via near-field resonance, at a frequency (e.g., 6.78 MHz.), and an amount of power received from transmit antenna **764** may be determined by chargeable device **700**. Moreover, transmit antenna **700** may be configured to receive wireless power from transmit antenna **766**, via near-field resonance, at a frequency (e.g., 6.78 MHz.), and an amount of power received from transmit antenna **766** may be determined by chargeable device **700**. Furthermore, coil **705** may be configured to receive wireless power, via inductive coupling, from coil **768** of wireless charger **756** and chargeable device **700** may determine an amount of received from coil **768**. Thereafter, chargeable device **700** may determine which one or more transmit elements enable for maximum efficiency, maximum charging rate, minimum interference, or any combination thereof. Accordingly, as an example, chargeable device **700** may determine that wireless charger transmit antenna **762** of wireless charger **754** and coil **768** of wireless charger **756** enable for optimal charging. After determining which one or more transmit elements enable for an

optimal charging scenario, chargeable device **700** may select the one or more transmit elements and wireless power may be transmitted to chargeable device **700**A accordingly.

Furthermore, as noted above, a time domain multiplexing method may be utilized to provide for optimal charging. As such, chargeable device **700** may be configured to determine an optimal charging scenario by utilizing a time domain multiplexing method based upon allocated activation time slots for two or more transmit elements. Accordingly, as an example, chargeable device **700** may determine that, in addition to receiving wireless power from coil **768**, transmit antenna **760** of wireless charger **752** may be time multiplexed with transmit antenna **766** of wireless charger **756** to enable for optimized charging.

FIG. **11** depicts a chargeable device **700**B, which is similar to chargeable device **700** of FIG. **7** and, therefore, will not be explained again. However, in FIG. **11**, chargeable device **700**B includes a plurality of receive antennas **702**. Although chargeable device **700**B is depicted as having only two receive antennas **702**, chargeable device **700**B may include any number of receive antennas **702**. Similarly to chargeable device **700**, chargeable device **700**B may be configured to detect one or more wireless chargers positioned within an associated charging region and including one or more transmit elements. Furthermore, upon detection of one or more wireless chargers, chargeable device **700**B may be configured to optimize an amount of power received from the one or more wireless chargers and, more specifically, the one or more transmit elements. It is noted that in an embodiment wherein chargeable device **700**B includes multiple receive antennas, chargeable device **700**B may be configured to receive wireless power from multiple transmit antennas associated with one or more wireless chargers at any one time.

Determining an optimal charging scenario may include determining an optimal charging scenario for one or more detected wireless chargers that may include one or more protocols and/or may be configured to transmit wireless power at one or more frequencies. More specifically, determining an optimal charging scenario may include determining which plurality of transmit elements associated with one or more detected wireless chargers enables for optimal charging of chargeable device **700**B. It is noted that in an embodiment wherein chargeable device **700**B includes multiple antennas, a time domain multiplexing method, as mentioned above, may still be used.

FIG. **12** illustrates a system **780** including chargeable device **700**B. System **780** further includes first wireless charger **752**, second wireless charger **754**, and third wireless charger **756**, each of which is positioned within an associated charging region of chargeable device **700**B. First wireless charger **752**, second wireless charger **754**, and third wireless charger **756** have been described above and, therefore, will not be explained again. However, it is noted that first wireless charger **752** includes a coil **763**. According to one contemplated operation of system **780**, chargeable device **700**B may detect one or more wireless chargers within an associated charging region and operating with one or more specific protocols (e.g., near-field resonance and/or inductive coupling) and/or resonating at one or more specific frequencies (i.e., unlicensed ISM bands). Accordingly, chargeable device **700**B may detect each of first wireless charger **752**, second wireless charger **754**, and third wireless charger **756**.

Moreover, upon detection thereof, respective communication links **765**, **767**, and **769** may be established between chargeable device **700**B and first wireless charger **752**, second wireless charger **754**, and third wireless charger **756**. As noted above with respect to chargeable device **700**, upon establishing a communication link with a detected wireless charger, chargeable device **700**B may be configured to control an operation of a detected wireless charger (e.g., transmission of power, synchronization of data, displaying media, or any user-interface functionality). Further, upon detection of first wireless charger **752**, second wireless charger **754**, and third wireless charger **756**, chargeable device **700**B may be configured to determine an optimal charging scenario.

For example, with reference to FIG. **12**, chargeable device **700**B may be configured to sequentially receive wireless power from each individual transmit element (i.e., transmit antenna **760**, transmit antenna **762**, transmit antenna **764**, transmit antenna **766**, coil **763**, and coil **768**). Furthermore, chargeable device **700**B may be configured to sequentially receive wireless power from every possible and suitable combination of two or more transmit elements. It is noted that chargeable device **700**B may only simultaneously receive power from a number of transmit antennas equal to a number of receive antennas **702**. For example, if chargeable device **700**B comprises two receive antennas **702**, chargeable device **700**B may be configured to simultaneously receive wireless power from every possible combination of two transmit antennas. However, it is noted that coil **705** may simultaneously receive wireless power from both coil **763** and **768**, so long as coil **763** and **768** are each in phase with coil **705**.

After determining an amount of power received from each suitable combination of transmit elements, and optionally each transmit element individually, chargeable device **700**B may be configured to identify one or more transmit elements for optimal charging. By way of example, in an embodiment wherein chargeable device **700**B includes two antennas **702**, charging device **700**B may identify transmit antenna **764**, transmit antenna **766**, and coil **763** as transmit elements for enabling an optimal charging scenario. As another example, charging device **700**B may identify transmit antenna **766**, transmit antenna **762**, and coil **768** as transmit elements for enabling an optimal charging scenario. Further, chargeable device **700**B may be configured to determine an optimal charging scenario by utilizing a time domain multiplexing method based upon allocated activation time slots for two or more transmit antennas.

FIG. **13** is a flowchart illustrating a method **680**, in accordance with one or more exemplary embodiments. Method **680** may include detecting one or more transmit elements positioned within an associated charging region (depicted by numeral **682**). Method **680** may further include selecting at least one transmit element of the detected one or more transmit elements to receive wireless power therefrom to enable optimal charging of the chargeable device (depicted by numeral **684**).

FIG. **14** depicts a charger **900** that may comprise any known and suitable charger configured to transmit wireless power. Charger **900** may include at least one transmit antenna **704** configured to wirelessly transmit power to at least one chargeable device (e.g., chargeable device **700**). More specifically, transmit antenna **704** and an associated transmitter, such as transmitter **104** of FIG. **2**, may be configured to transmit wireless power at a frequency (e.g., an unlicensed ISM band) to a receiver within an associated near-field region. Further, charger **900** may include at least one coil **902** configured to transmit wireless power to a chargeable device (e.g., chargeable device **700**) via inductive coupling.

Furthermore, in accordance with various exemplary embodiments of the present invention, charger **900** may be configured to detect one or more chargeable devices, which are positioned within a charging region of charger **900** and are configured to receive wireless power via a suitable protocol.

More specifically, charger **900** may be configured to detect one or more chargeable devices according to one or more specific protocols, one or more specific frequencies, or both. For example only, charger **900** may be configured to detect chargeable devices within a charging region by sampling for chargeable devices operating with specific wireless charging protocols, sampling for chargeable devices resonating at specific wireless charging frequencies, or both.

According to one exemplary embodiment, charger **900** may be configured to detect one or more chargeable devices positioned within an associated near-field region and configured to receive wireless power at one or more frequencies via near-field resonance. For example only, charger **900** may be configured to detect one or more chargeable devices positioned within an associated near-field region and configured to receive wireless power, via near-field resonance, at a suitable frequency, such as an unlicensed ISM band (e.g., 13.56 MHz). It is noted that various frequencies may be suitable for wireless power transmission in one location (e.g., a first country) but not suitable in another location (e.g., a second country). As such, according to one exemplary embodiment, charger **900** may be configured to determine its location via a location device **901** and, thereafter, determine which one or more frequencies are suitable for wireless power transmission. For example only, location device **901** may comprise a Global Positioning System (GPS) device. Further, according to one exemplary embodiment, charger **900** may be configured to detect one or more chargeable devices positioned within an associated charging region and configured to receive wireless power via an inductive coupling protocol.

Moreover, charger **900** may be configured to establish a communication link with a detected chargeable device and, upon establishing the communication link, may wirelessly receive data (e.g., audio files, data files, or video files) from the chargeable device, wirelessly transmit data to the chargeable device, or both. Additionally, it is noted that charger **900** may be configured to perform various operations (e.g., synchronizing data and/or displaying media) while transmitting power to one or more chargeable devices. Furthermore, charger **900** may be configured to detect and transmit wireless to multiple versions of chargeable devices. Accordingly, charger **900** may be configured to identify a version of a detected chargeable device and transmit power to and communicate with the detected chargeable device in a suitable manner. It is further noted that charger **900** may attempt to communicate with each detected chargeable device according to a common version protocol. However, in the event that a detected chargeable device is not compatible with the common version protocol, charger **900** may be configured to communicate with the chargeable device in a suitable manner using a suitable version protocol.

Additionally, upon detection of one or more chargeable devices, charger **900** may be configured to determine an optimal charging solution which may maximize efficiency, maximize charging rates, minimize interference, or any combination thereof, for charging the one or more detected chargeable devices. More specifically, for example, charger **900** may be configured to determine an optimal solution for providing wireless power to one or more of the detected chargeable devices for a given set of conditions (e.g., the number of available transmit elements within charger **900** compared to the number of detected chargeable devices, the charging levels of each of the detected chargeable devices, or the amount of power received by each detected chargeable devices (i.e., the charging efficiency between charger **900** and each of the detected chargeable devices)).

FIG. **15** illustrates a system **910** including a charger **900**A, a first chargeable device **902**, and a second chargeable device **903**. As illustrated, each of first chargeable device **902** and second chargeable device **903** include a receive antenna **702** and each are configured to receive wireless power transmitted at a specific frequency via near-filed resonance. It is noted that charger **900**A is similar to charger **900** of FIG. **13** and, therefore, will not be described in detail. However, it is noted that charger **900**A does not include a coil and only includes a single transmit antenna **704**.

According to one contemplated operation of system **910**, charger **900**A may detect each of first chargeable device **902** and second chargeable device **903** via any suitable manner. According to one contemplated operation of system **910**, charger **900**A may detect each of first chargeable device **902** and second chargeable device **903**, each of which being positioned within an associated charging region and operating with one or more wireless power protocols (e.g., near-field resonance) and/or resonating at one or more wireless power frequencies (e.g., unlicensed ISM bands). Moreover, upon detection thereof, respective communication links **905** and **907** may be established between charger **900**A and each of first chargeable device **902** and second chargeable device **903**. Furthermore, upon detection of first chargeable device **902** and second chargeable device **903**, charger **900**A may determine an optimal charging solution for system **910**. It is noted that in an embodiment wherein charger **900**A includes a single transmit element (i.e., transmit antenna **704**), charger **900**A may be configured to transmit wireless power to only one chargeable device at any one time.

As such, according to one exemplary embodiment, charger **900**A may be configured to determine which single detected chargeable device (i.e., either first chargeable device **902** or second chargeable device **903**) should be charged to enable for an optimal charging solution. As one example, charger **900**A may be configured to determine charging efficiencies between charger **900**A and each of first chargeable device **902** and second chargeable device **903**. Thereafter, to reduce power loss, charger **900**A may be configured to convey wireless power to the device that has the highest charging efficiency. More specifically, for example, charger **900**A may be configured to sequentially transmit wireless power to each of first chargeable device **902** and second chargeable device **903**. Further, charger **900**A may be configured to request and receive a signal from each of first chargeable device **902** and second chargeable device **903** identifying an amount of power received by each of first chargeable device **902** and second chargeable device **903**. Thereafter, charger **900**A may determine which chargeable device has a higher charging efficiency and, thereafter, convey power thereto. By way of example, charger **900**A may determine that a charging efficiency with first chargeable device **902** is greater than a charging efficiency with second chargeable device **903** and, therefore, charger **900**A may select first chargeable device **902** and convey power thereto.

As another example, charger **900**A may be configured to charge a device having the greatest need for a charge. More specifically, for example, charger **900**A may be configured to determine, via communication means, a charging level of each of first chargeable device **902** and second chargeable device **903** and, thereafter, select and convey wireless power to the device that has the least charged battery. By way of example, charger **900**A may determine that a battery of second chargeable device **903** has a lower charging level than a battery of first chargeable device **902** and, as a result, charger **900**A may select and convey wireless power to second chargeable device **903**. Furthermore, after a charging level of

the battery of second chargeable device **903** has reached an acceptable status, charger **900**A may convey wireless power to first chargeable device **902**. Further, according to another exemplary embodiment, charger **900**A may be configured to determine whether a time domain multiplexing method, based upon allocated activation time slots for each of first chargeable device **902** and second chargeable device **903**, may enable for an optimal charging solution.

FIG. **16** illustrates a system **950** including charger **900**B, a first chargeable device **911**, a second chargeable device **912**, a third chargeable device **913**, and a forth chargeable device **914**. As illustrated, each of first chargeable device **911**, second chargeable device **912**, third chargeable device **913**, and forth chargeable device **914** include an antenna **702** configured to receive wireless power transmitted at a specific frequency via near-filed resonance. Furthermore, each of first chargeable device **911**, second chargeable device **912**, third chargeable device **913**, and forth chargeable device **914** include a coil **909** configured to receive wireless power via inductive coupling. It is noted that charger **900**B is similar to charger **900** of FIG. **13** and, therefore, will not be described in detail. However, it is noted that charger **900**B includes two transmit antennas **704**. According to one contemplated operation of system **950**, charger **900**B may detect each of first chargeable device **911**, second chargeable device **912**, third chargeable device **913**, and forth chargeable device **914** via any suitable means. According to one contemplated operation of system **950**, charger **900**B may detect each of first chargeable device **911**, second chargeable device **912**, third chargeable device **913**, and forth chargeable device **914**, each of which being positioned within an associated charging region and operating with one or more wireless power protocols (e.g., near-field resonance) and/or resonating at one or more wireless power frequencies (e.g., unlicensed ISM bands).

Moreover, upon detection thereof, respective communication links **970**, **971**, **972**, and **973** may be established between charger **900** and each of first chargeable device **911**, second chargeable device **912**, third chargeable device **913**, and a forth chargeable device **914**. Furthermore, upon detection of first chargeable device **911**, second chargeable device **912**, third chargeable device **913**, and forth chargeable device **914**, charger **900**B may determine an optimal charging solution for system **950**.

It is noted that charger **900**B may simultaneously transmit power to a number of receive antennas (i.e., receive antenna **702**) equal to a number of transmit antennas (i.e., transmit antennas **704**). For example, in the embodiment illustrated in FIG. **15**, charger **900**B may be configured to simultaneously transmit wireless power to two transmit antennas **704**. Furthermore, it is noted that coil **902** may simultaneously transmit wireless power to multiple coils **909**, so long as the coils **909** are in phase with coil **902**

According to one exemplary embodiment, charger **900**B may be configured to determine which one or more detected chargeable devices should be charged to enable for an optimal charging solution. As one example, charger **900**B may be configured to determine a charging efficiency between charger **900**B and each of first chargeable device **911**, second chargeable device **912**, third chargeable device **913**, and forth chargeable device **914**. Thereafter, to reduce power loss, charger **900**B may be configured to convey wireless power to one or more chargeable devices that have the highest charging efficiency. More specifically, for example, charger **900**B may be configured to sequentially transmit wireless power to each of first chargeable device **911**, second chargeable device **912**, third chargeable device **913**, and forth chargeable device **914** according to various protocols and frequencies. Further, charger **900**B may be configured to request and receive a signal from each of first chargeable device **911**, second chargeable device **912**, third chargeable device **913**, and forth chargeable device **914** identifying an amount of power received by each of first chargeable device **911**, second chargeable device **912**, third chargeable device **913**, and forth chargeable device **914** according to each suitable protocol and frequency. Thereafter, charger **900**B may determine which one or more chargeable devices should be charged with which protocols and frequencies to enable for an optimal charging scenario of system **950**.

As another example, charger **900**B may be configured to convey power to one or more chargeable devices that have the greatest need for a charge. More specifically, for example, charger **900**B may be configured to determine, via communication means, a charging level of each of first chargeable device **911**, second chargeable device **912**, third chargeable device **913**, and forth chargeable device **914** and, thereafter, convey wireless power to the one or more chargeable devices having the least charged batteries. Further, according to another exemplary embodiment, charger **900**B may be configured to determine whether a time domain multiplexing method, based upon allocated activation time slots for two or more of first chargeable device **911**, second chargeable device **912**, third chargeable device **913**, and forth chargeable device **914**, may enable for an optimal charging solution.

It is noted that charger **900** and, more specifically, at least one antenna **704** of charger **900** may include additional functionality. As one example, antenna **704** may be configured to transmit radio frequencies. Furthermore, for example, antenna **704** may be configured to operate as a RF repeater, a femtocell, a WiFi access point (AP), or any combination thereof. Additionally, antenna **704** may positioned remotely from and connected to charger **900** via a coax, an RF conductor, an IP connection, or any other suitable connector. In this example, antenna **704** may configured to operate as a remote antenna for an RF repeater, a femtocell, a WiFi access point (AP), or any combination thereof.

FIG. **17** is a flowchart illustrating a method **690**, in accordance with one or more exemplary embodiments. Method **690** may include detecting one or more receive elements positioned within an associated charging region (depicted by numeral **692**). Method **690** may further include selecting at least one receive element of the detected one or more receive elements to transmit wireless power thereto to enable for an optimal charging solution of one or more chargeable devices associated with the one or more receive elements (depicted by numeral **694**).

Those of skill in the art would understand that information and signals may be represented using any of a variety of different technologies and techniques. For example, data, instructions, commands, information, signals, bits, symbols, and chips that may be referenced throughout the above description may be represented by voltages, currents, electromagnetic waves, magnetic fields or particles, optical fields or particles, or any combination thereof.

Those of skill would further appreciate that the various illustrative logical blocks, modules, circuits, and algorithm steps described in connection with the exemplary embodiments disclosed herein may be implemented as electronic hardware, computer software, or combinations of both. To clearly illustrate this interchangeability of hardware and software, various illustrative components, blocks, modules, circuits, and steps have been described above generally in terms of their functionality. Whether such functionality is implemented as hardware or software depends upon the particular application and design constraints imposed on the overall

system. Skilled artisans may implement the described functionality in varying ways for each particular application, but such implementation decisions should not be interpreted as causing a departure from the scope of the exemplary embodiments of the invention.

The various illustrative logical blocks, modules, and circuits described in connection with the exemplary embodiments disclosed herein may be implemented or performed with a general purpose processor, a Digital Signal Processor (DSP), an Application Specific Integrated Circuit (ASIC), a Field Programmable Gate Array (FPGA) or other programmable logic device, discrete gate or transistor logic, discrete hardware components, or any combination thereof designed to perform the functions described herein. A general purpose processor may be a microprocessor, but in the alternative, the processor may be any conventional processor, controller, microcontroller, or state machine. A processor may also be implemented as a combination of computing devices, e.g., a combination of a DSP and a microprocessor, a plurality of microprocessors, one or more microprocessors in conjunction with a DSP core, or any other such configuration.

The steps of a method or algorithm described in connection with the exemplary embodiments disclosed herein may be embodied directly in hardware, in a software module executed by a processor, or in a combination of the two. A software module may reside in Random Access Memory (RAM), flash memory, Read Only Memory (ROM), Electrically Programmable ROM (EPROM), Electrically Erasable Programmable ROM (EEPROM), registers, hard disk, a removable disk, a CD-ROM, or any other form of storage medium known in the art. An exemplary storage medium is coupled to the processor such that the processor can read information from, and write information to, the storage medium. In the alternative, the storage medium may be integral to the processor. The processor and the storage medium may reside in an ASIC. The ASIC may reside in a user terminal. In the alternative, the processor and the storage medium may reside as discrete components in a user terminal.

In one or more exemplary embodiments, the functions described may be implemented in hardware, software, firmware, or any combination thereof. If implemented in software, the functions may be stored on or transmitted over as one or more instructions or code on a computer-readable medium. Computer-readable media includes both computer storage media and communication media including any medium that facilitates transfer of a computer program from one place to another. A storage media may be any available media that can be accessed by a computer. By way of example, and not limitation, such computer-readable media can comprise RAM, ROM, EEPROM, CD-ROM or other optical disk storage, magnetic disk storage or other magnetic storage devices, or any other medium that can be used to carry or store desired program code in the form of instructions or data structures and that can be accessed by a computer. Also, any connection is properly termed a computer-readable medium. For example, if the software is transmitted from a website, server, or other remote source using a coaxial cable, fiber optic cable, twisted pair, digital subscriber line (DSL), or wireless technologies such as infrared, radio, and microwave, then the coaxial cable, fiber optic cable, twisted pair, DSL, or wireless technologies such as infrared, radio, and microwave are included in the definition of medium. Disk and disc, as used herein, includes compact disc (CD), laser disc, optical disc, digital versatile disc (DVD), floppy disk and blu-ray disc where disks usually reproduce data magnetically, while discs reproduce data optically with lasers. Combinations of the above should also be included within the scope of computer-readable media.

The previous description of the disclosed exemplary embodiments is provided to enable any person skilled in the art to make or use the present invention. Various modifications to these exemplary embodiments will be readily apparent to those skilled in the art, and the generic principles defined herein may be applied to other embodiments without departing from the spirit or scope of the invention. Thus, the present invention is not intended to be limited to the exemplary embodiments shown herein but is to be accorded the widest scope consistent with the principles and novel features disclosed herein.

What is claimed is:

**1**. A chargeable device, comprising:

at least one receive element configured to receive wireless power; and

a receive circuit configured to:

detect a plurality of wireless chargers according to one or more protocols, or one or more frequencies, or both, a first charger of the detected plurality of wireless chargers associated with a protocol or frequency different than a corresponding protocol or frequency for a second charger of the detected plurality of wireless chargers,

receive an amount of power from at least the first and second chargers of the detected plurality of wireless chargers,

determine the amount of power received from the first and second chargers,

select one of the first charger or the second charger from which to receive the wireless power based on (a) the associated protocol or frequency and (b) the amount of power received, and

receive the wireless power to charge or power a load.

**2**. The chargeable device of claim **1**, the receive circuit further configured to detect the plurality of wireless chargers by sampling for wireless chargers operating with at least one of the one or more protocols.

**3**. The chargeable device of claim **2**, the receive circuit further configured to detect the plurality of wireless chargers by sampling for wireless chargers operating with a near-field resonance protocol, or an inductive coupling protocol, or both.

**4**. The chargeable device of claim **1**, the receive circuit further configured to detect the plurality of wireless chargers by sampling for wireless chargers resonating at the one or more frequencies.

**5**. The chargeable device of claim **4**, the receive circuit further configured to detect the plurality of wireless chargers by sampling for wireless chargers resonating at one or more unlicensed ISM band frequencies.

**6**. The chargeable device of claim **1**, further comprising:

a processor configured to determine which one of the plurality of chargers provides most efficient transfer of wireless power to the load based on a position of the first and second chargers relative to the load; and

a location device configured for determining a location thereof.

**7**. The chargeable device of claim **1**, the at least one receive element comprising at least one of a receive antenna and a coil.

**8**. The chargeable device of claim **1**, the receive circuit further configured to wirelessly communicate with at least one charger of the detected plurality of wireless chargers.

9. The chargeable device of claim 1, the receive circuit further configured to control at least one operation of at least one charger of the detected plurality of wireless chargers.

10. A method of operating a: chargeable device, comprising:

detecting a plurality of wireless chargers according to one or more protocols, or one or more specific frequencies, or both, a first charger of the detected plurality of wireless chargers associated with a protocol or frequency different than a corresponding protocol or frequency for a second charger of the detected plurality of wireless chargers;

receiving an amount of power from at least the first and second chargers of the detected plurality of wireless chargers;

determining the amount of power received from the first and second chargers; and

selecting one of the first charger or the second charger from which to receive the wireless power based on (a) the associated protocol or frequency and (b) the amount of power received to enable charging of the chargeable device.

11. The method of claim 10, wherein detecting the plurality of wireless chargers comprises detecting a plurality of wireless chargers according to a near-field resonance protocol, or an inductive coupling protocol, or both.

12. The method of claim 10, wherein the plurality of wireless chargers comprises detecting a plurality of wireless chargers resonating at least one unlicensed ISM band frequency.

13. The method of claim 10, wherein selecting comprises:

sequentially receiving wireless power from each charger of the detected plurality of wireless chargers sufficient to power or charge the chargeable device.

14. The method of claim 10, wherein selecting comprises selecting chargers from among the detected plurality of wireless chargers to receive wireless power therefrom in a time-domain multiplexing method.

15. The method of claim 10, further comprising detecting a version of one or more chargers of the detected plurality of wireless chargers.

16. A chargeable device, comprising:

means for detecting a plurality of wireless chargers according to one or more protocols, or one or more frequencies, or both, a first charger of the detected plurality of wireless chargers associated with a protocol or frequency different than a corresponding protocol or frequency for a second charger of the detected plurality of wireless chargers;

means for receiving an amount of power from at least the first and second chargers of the detected plurality of wireless chargers;

means for determining the amount of power received from the first and second chargers; and

means for selecting one of the first charger or the second charger from which to receive the wireless power based (a) on the associated protocol or frequency and (b) the amount of power received to enable charging of the chargeable device.

17. A charger for transmitting wireless power, comprising:

at least one transmit element configured to wirelessly transmit the wireless power; and

a transmit circuit configured to:

detect a plurality of chargeable devices positioned within an associated charging region according to one or more protocols, or one or more frequencies, or both, a first chargeable device of the detected chargeable devices associated with a protocol or frequency different than a corresponding protocol or frequency for a second chargeable device of the detected chargeable devices,

transmit an amount of power to at least the first and second chargeable devices of the detected plurality of chargeable devices,

determine the amount of power received by the first and second chargeable devices,

select one of the first chargeable device or the second chargeable device to transmit the wireless power to based on (a) the associated protocol or frequency, and (b) the amount of power received, and

transmit the wireless power to at least one of the detected chargeable devices.

18. The charger of claim 17, the transmit circuit further configured to detect the plurality of chargeable devices by sampling for chargeable devices operating with at least one of the one or more protocols.

19. The charger of claim 18, the transmit circuit further configured to detect the plurality of chargeable devices by sampling for chargeable devices operating with a near-field resonance protocol, or an inductive coupling protocol, or both.

20. The charger of claim 17, the transmit circuit further configured to detect the plurality of chargeable devices by sampling for chargeable devices resonating at least one of the one or more frequencies.

21. The charger of claim 17, the transmit circuit further configured to detect the plurality of chargeable devices by sampling for chargeable devices resonating at least one unlicensed ISM band.

22. The Charger of claim 17, further comprising a location device configured for determining a location thereof.

23. The charger of claim 17, the at least one transmit element comprising at least one of a transmit antenna and a coil.

24. A method of operating a wireless charger, comprising:

detecting a plurality of chargeable devices positioned within an associated charging region according to one or more protocols, or one or more frequencies, or both, a first chargeable device of the detected chargeable devices associated with a protocol or frequency different than a corresponding protocol or frequency for a second chargeable device of the detected chargeable devices;

transmitting an amount of power to at least the first and second chargeable devices of the detected plurality of chargeable devices;

determining the amount of power received by the first and second chargeable devices; and

selecting one of the first chargeable device or the second chargeable device to transmit the wireless power to based on (a) the associated protocol or frequency and (b) the amount of power received to enable a charging solution of at least one of the detected chargeable devices.

25. The method of claim 24, wherein detecting the plurality of chargeable devices comprises detecting the plurality of chargeable devices according to a near-filed resonance protocol, or an inductive coupling protocol, or both.

26. The method of claim 24, wherein detecting the plurality of chargeable devices comprises detecting one or more receive elements resonating at least one unlicensed ISM band frequency.

27. The method of claim 24, wherein selecting comprises selecting at least one chargeable devices of the detected plurality of chargeable devices to transmit wireless power thereto in a time-domain multiplexing method.

**28**. The method of claim **24**, further comprising detecting a version of at least one of the chargeable devices.

**29**. The method of claim **24**, wherein selecting comprises selecting the at least one chargeable device of the detected plurality of chargeable devices having a highest charging efficiency with the wireless charger from among the detected plurality of chargeable devices.

**30**. The method of claim **24**, wherein selecting comprises selecting the at least one chargeable device having a lowest charging level from among the detected plurality of chargeable devices.

**31**. The method of claim **24**, further comprising receiving a signal indicative of an amount of power received at each chargeable device.

**32**. A wireless charger, comprising:

means for detecting a plurality of chargeable devices positioned within an associated charging region according to one or more protocols, or one or more frequencies, or both, a first chargeable device of the detected chargeable devices associated with a protocol or frequency different than a corresponding protocol or frequency for a second chargeable device of the detected chargeable devices;

means for transmitting an amount of power to at least the first and second chargeable devices of the detected plurality of chargeable devices;

means for determining the amount of power received by the first and second chargeable devices; and

means for selecting one of the first chargeable device or the second chargeable device to transmit the wireless power to based on (a) the associated protocol or frequency and (b) the amount of power received to enable a charging solution of at least one of the detected chargeable devices.

* * * * *