US008884468B2

(12) **United States Patent**
Lemmens et al.

(10) **Patent No.: US 8,884,468 B2**
(45) **Date of Patent: Nov. 11, 2014**

(54) **CIRCUITRY FOR INDUCTIVE POWER TRANSFER**

(75) Inventors: **Willy Henri Lemmens**, Heverlee (BE); **David Martin Pooley**, Cambridgeshire (GB); **John De Clercq**, Evergem (BE)

(73) Assignee: **Access Business Group International LLC**, Ada, MI (US)

(*) Notice: Subject to any disclaimer, the term of this patent is extended or adjusted under 35 U.S.C. 154(b) by 1148 days.

(21) Appl. No.: **12/808,490**

(22) PCT Filed: **Dec. 18, 2008** (Under 37 CFR 1.47)

(86) PCT No.: **PCT/GB2008/004206**

§ 371 (c)(1), (2), (4) Date: **Dec. 13, 2010**

(87) PCT Pub. No.: **WO2009/081126**

PCT Pub. Date: **Jul. 2, 2009**

(65) **Prior Publication Data**

US 2011/0285210 A1 Nov. 24, 2011

(30) **Foreign Application Priority Data**

Dec. 21, 2007 (GB) 0724981.6
Dec. 21, 2007 (GB) 0724982.4

(51) **Int. Cl.**

H01F 27/42	(2006.01)
H01F 37/00	(2006.01)
H01F 38/00	(2006.01)
H02J 7/02	(2006.01)
H02J 5/00	(2006.01)
H02J 7/04	(2006.01)

(52) **U.S. Cl.**

CPC ***H02J 5/005*** (2013.01); ***H02J 7/025*** (2013.01); *H02J 7/045* (2013.01)

USPC **307/104**

(58) **Field of Classification Search**

USPC 307/104

See application file for complete search history.

(56) **References Cited**

U.S. PATENT DOCUMENTS

5,202,664	A	4/1993	Poulsen
6,515,878	B1	2/2003	Meins et al.

(Continued)

FOREIGN PATENT DOCUMENTS

EP	0298707	1/1989
EP	0903830	3/1999

(Continued)

OTHER PUBLICATIONS

Merritt, Purcell, Stroink; "Uniform Magnetic Field Produced by Three, Four, and Five Square Coils;" Rev. Sci. Instrum.; Jul. 1983; pp. 879-882; vol. 54 No. 7.

(Continued)

Primary Examiner — Carlos Amaya

(74) *Attorney, Agent, or Firm* — Warner Norcross & Judd LLP

(57) **ABSTRACT**

Circuitry for use in a primary unit of an inductive power transfer system to generate an electromagnetic field so as to transfer power wirelessly by electromagnetic induction to one or more secondary units of the system, the or each secondary unit being separable from the primary unit, the circuitry comprising: a plurality of drivable portions, each portion comprising a primary coil or a dummy coil; driving means operable to supply both or at least two of said portions with drive signals so as to cause those driven portions that have a said primary coil to generate said electromagnetic field; and control means operable, in dependence upon a feedback signal indicative of a characteristic of the primary or dummy coil of one or more of the driven portions, to control the circuitry so as to tend to regulate said feedback signal, wherein the circuitry is configured so that; those portions that are driven are connected together in parallel and have a tuned resonant response; and said control tends to regulate such a characteristic of each of said driven coils.

35 Claims, 24 Drawing Sheets

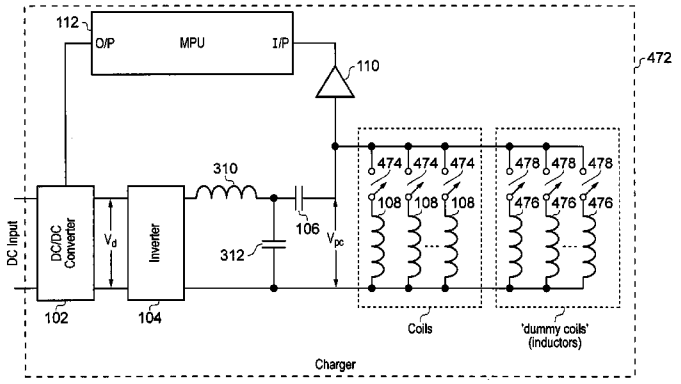

SAMSUNG EXHIBIT 1054

(56) **References Cited**

U.S. PATENT DOCUMENTS

6,548,985	B1	4/2003	Hayes et al.	
6,650,213	B1	11/2003	Sakurai et al.	
6,803,744	B1	10/2004	Sabo	
6,906,495	B2	6/2005	Cheng et al.	
7,164,255	B2	1/2007	Hui	
7,432,622	B2	10/2008	Griepentrog et al.	
7,518,337	B2	4/2009	Beart et al.	
7,576,514	B2	8/2009	Hui	
7,868,482	B2	1/2011	Greene et al.	
2004/0000974	A1	1/2004	Odenaal et al.	
2004/0130916	A1 *	7/2004	Baarman	363/21.02
2005/0212634	A1	9/2005	Baldwin et al.	
2007/0287508	A1	12/2007	Telefus	
2008/0278112	A1	11/2008	Hui et al.	
2009/0015197	A1	1/2009	Sogabe et al.	
2009/0108805	A1	4/2009	Liu et al.	
2009/0230777	A1	9/2009	Baarman et al.	
2010/0109443	A1	5/2010	Cook et al.	
2010/0190435	A1	7/2010	Cook et al.	
2010/0328044	A1 *	12/2010	Waffenschmidt et al.	340/10.4
2012/0007437	A1 *	1/2012	Fells et al.	307/104

FOREIGN PATENT DOCUMENTS

EP	1022840	7/2000
EP	2211438	7/2010
GB	2117579	10/1983
GB	2388716	11/2003
GB	2389720	12/2003
JP	10-285087	10/1998
JP	11095922	4/1999
JP	11-298368	10/1999
JP	2000-148932	5/2000
JP	2000-228637	8/2000
WO	9511544	4/1995
WO	9511545	4/1995
WO	0116995	3/2001
WO	03105308	12/2003
WO	2005109597	11/2005
WO	2006/022365	3/2006
WO	2007042953	4/2007
WO	2007146223	12/2007
WO	2008035248	3/2008
WO	2008137996	11/2008
WO	2009027674	3/2009
WO	2009040807	4/2009
WO	2009047768	4/2009
WO	2009081115	7/2009
WO	2009081126	7/2009
WO	2009116025	9/2009
WO	2009147664	12/2009
WO	2005109598	11/2010

OTHER PUBLICATIONS

Achterberg, Lomonova, De Boeij; "Coil Array Structures Compared for Contactless Battery Charging Platform;" IEEE Transactions on Magnetics; May 2008; pp. 617-622; vol. 44, No. 5.

Hui, Ho; "A New Generation of Universal Contactless Battery Charging Platform for Portable Consumer Electronic Equipment;" 35th Annual IEEE Power Electronics Specialists Conference; 2004; pp. 638-644.

Sasada; "Three-Coil System for Producing Uniform Magnetic Fields;" Journal of the Magnetics Socitey of Japan; 2002; Abstract; vol. 27 No. 4.

Hatanaka, Sato, Matsuki, Kikuchi, Murakami, Kawase, Satoh; "Excited Composition of Primary Side in a Position-Free Contactless Power Station System;" 2002; pp. 580-584; vol. 26 No. 4.

Matsuki, Kikuchi, Murakami, Satoh, Hatanaka, Sato; "Power Transmission of a Desk With a Cord-Free Power Supply;" IEEE Transactions on Magnetics; Sep. 2002; pp. 3329-3331; vol. 38 No. 5.

Marder; "The Physics of Seraphim;" Sandia National Laboratories; Oct. 2001.

Hatanaka, Sato, Matsuki, Kikuchi, Murakami, Satoh; "Coil Shape in a Desk-Type Contactless Power Station System;" Jan. 24, 2001; pp. 1015-1018; vol. 25 No. 4-2.

Sato, Adachi, Matsuki, Kikuchi;"Tthe Optimum Design of Open Magnetic Circuit Meander Coil for Contactless Power Station System;" Digest of Intermag 99; May 1999; pp. GR09-GR09.

Tang, Hui, Chung; "Characterization of Coreless Printed Circuit Board (PCB) Transformers;" 1999; pp. 746-752.

Pedder, Brown, Skinner; "A Contactless Electrical Energy Transmission System;" IEEE Transactions on Industrial Electronics; Feb. 1999; pp. 23-30; vol. 46 No. 1.

Sato, Murakami, Suzuki, Matsuki, Kikuchi, Harakawa, Osada, Seki; "Contactless Energy Transmission to Mobile Loads by CLPS-Test Driving of an EV with Starter Batteries;" Sep. 1997; pp. 4203-4205; vol. 33 No. 5.

Murakami, Sato, Watanabe, Matsuki, Kikuchi, Harakawa, Satoh; "Consideration on Cordless Power Station-Contactless Power Transmission System;" IEEE Transactions on Magnetics; Sep. 1996; pp. 5037-5039; vol. 32 No. 5.

Sato, Murakami, Matsuki, Kikuchi, Harakawa, Satoh; "Stable Energy Transmission to Moving Loads Utilizing New CLPS;" IEEE Transactions on Magnetics; Sep. 1996; pp. 5034-5036; vol. 32 No. 5.

Donig, Melbert, Scheckel, Schon; "An Interface Circuit for Contactless Power and Data Transmission for Chipcard and Identification Systems;" Solid-State Circuits Conference, 1991; Sep. 1991; pp. 61-64; vol. 1.

Abel, Third; "Contactless Power Transfer—An Exercise in Topology;" IEEE Transactions on Magnetics; Sep. 1984; pp. 1813-1815; vol. 20 Issue 5.

Carter; "Coil-System Design for Production of Uniform Magnetic Fields;" Proceedings of the Institution of Electrical Engineers; Nov. 1976; pp. 1279-1283; vol. 123 No. 11.

Written Opinion of the International Searching Authority, International Application No. PCT/GB2008/04206, International Filing Date Dec. 18, 2008.

Joep Jacobs, Andreas Averberg and Rik De Doncker, Multi-Phase Series Resonant DC-to-DC Converters: Stationary Investigations, Power Electronics Specialists Conference, 2005, Jan. 1, 2005, pp. 660-666.

International Search Report, International Application No. PCT/GB2008/004189, International Filing Date Dec. 18, 2008.

* cited by examiner

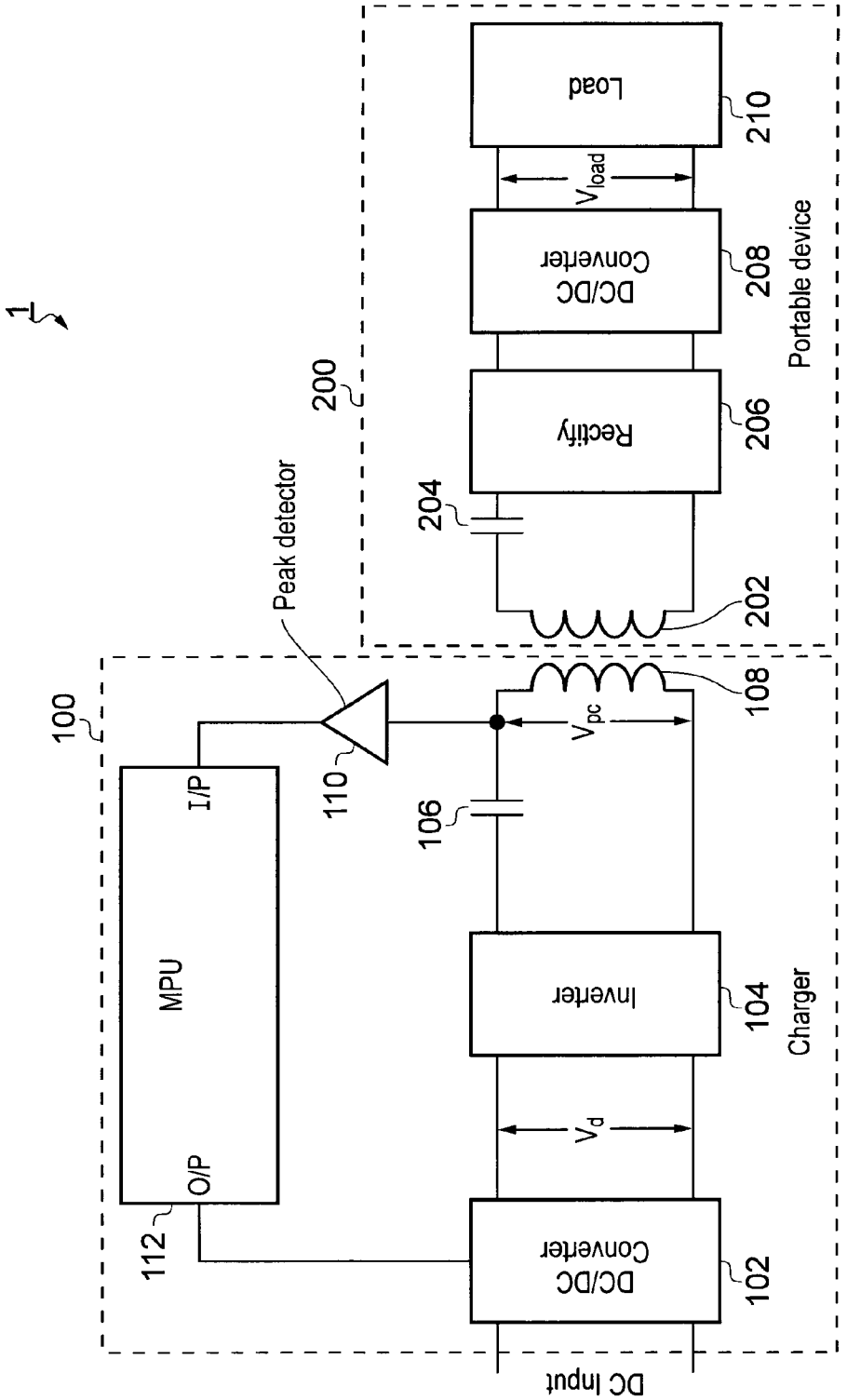
1
100
200
Peak detector
MPU
I/P
O/P
112
110
106
108
V_{pc}
Inverter
104
Charger
V_d
DC/DC Converter
102
DC Input
204
Rectify
206
DC/DC Converter
208
V_{load}
Load
210
202
Portable device

FIG. 1

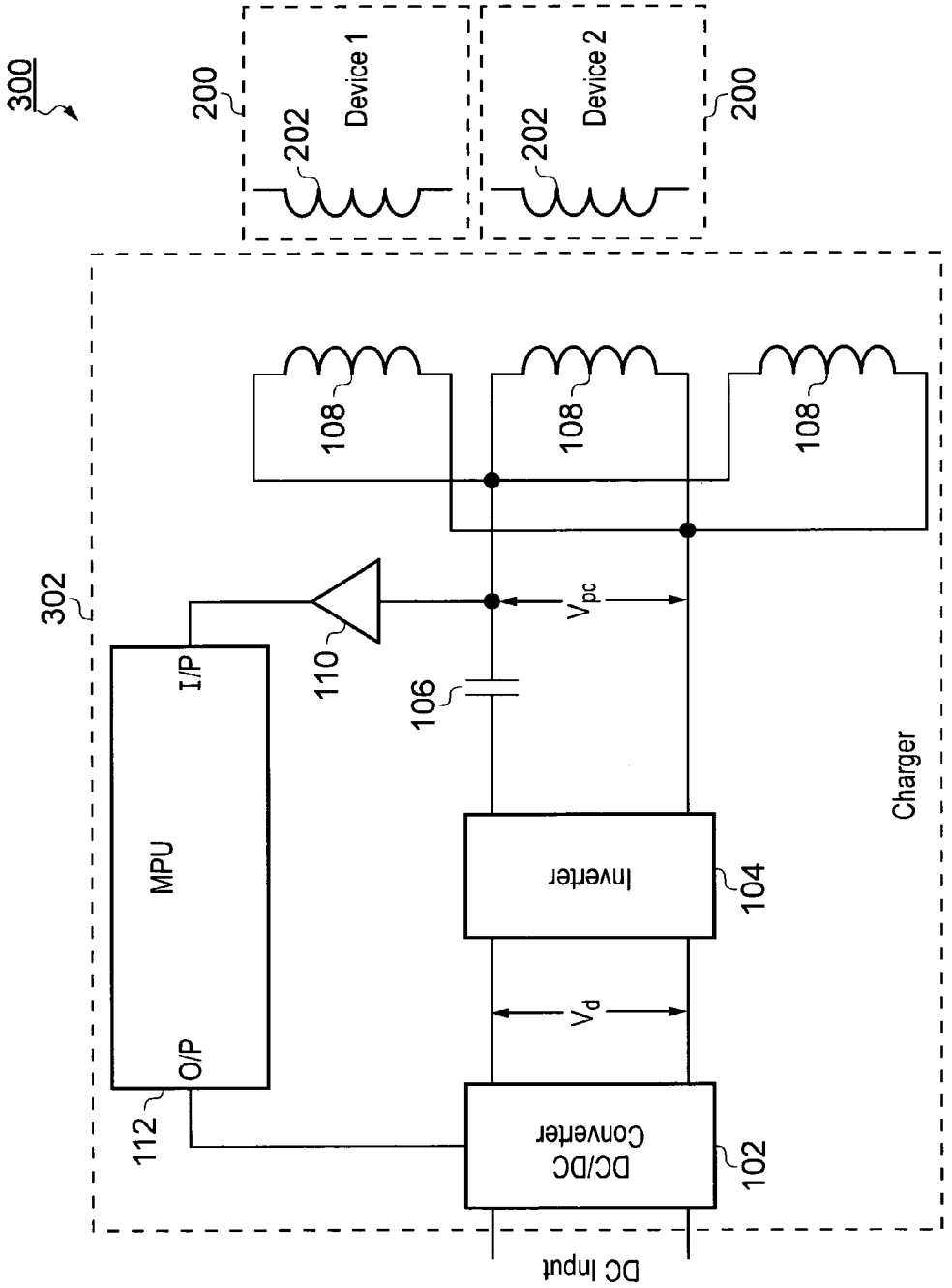
300
200
Device 1
202
Device 2
202
200
302
108
108
108
110
106
V_{pc}
I/P
MPU
O/P
112
Inverter
104
V_d
DC/DC Converter
102
Charger
DC Input

FIG. 2

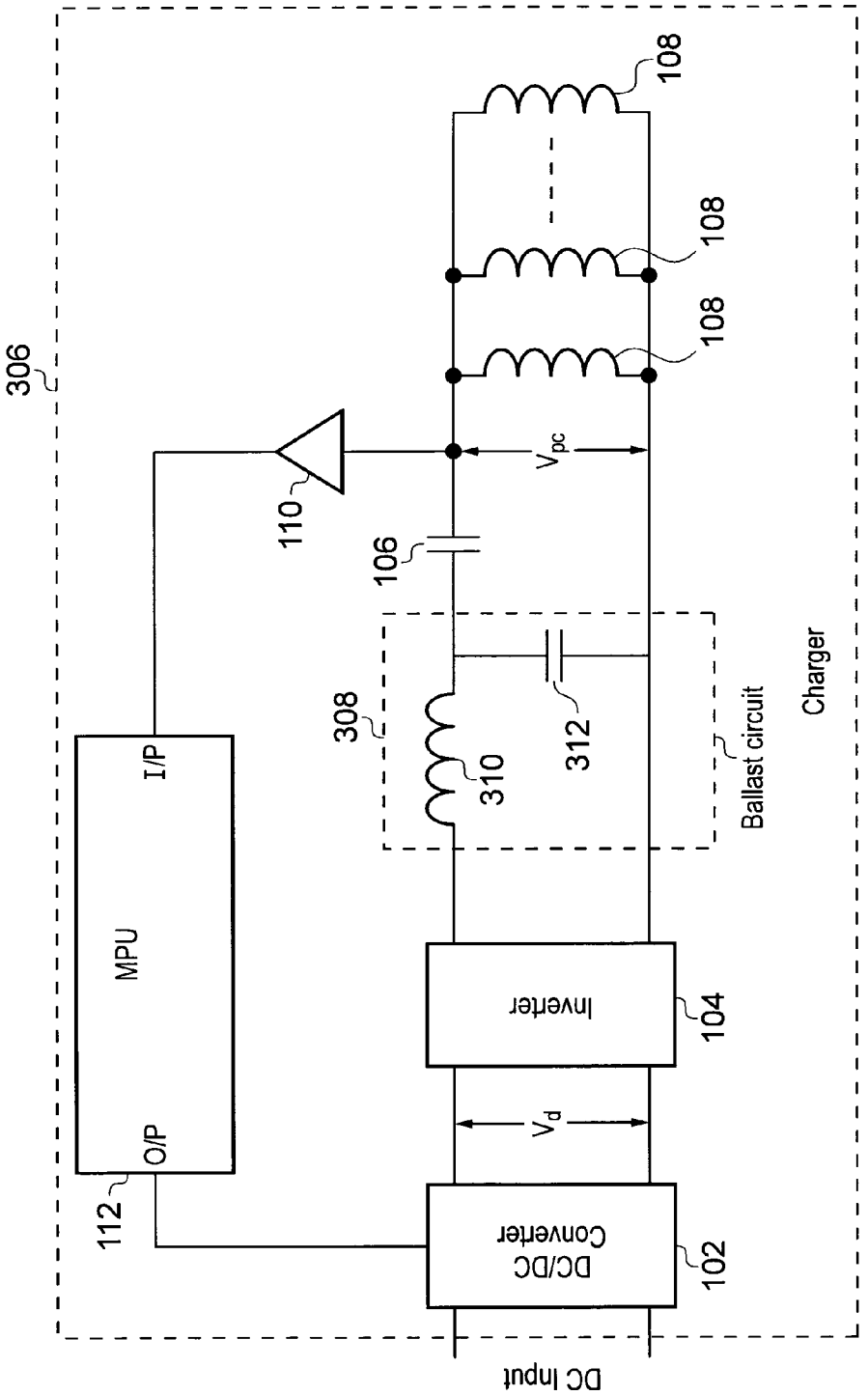
306
108
108
108
110
106
V_{pc}
308
310
312
Ballast circuit
Charger
MPU
I/P
O/P
112
Inverter
104
V_d
DC/DC Converter
102
DC Input

FIG. 3

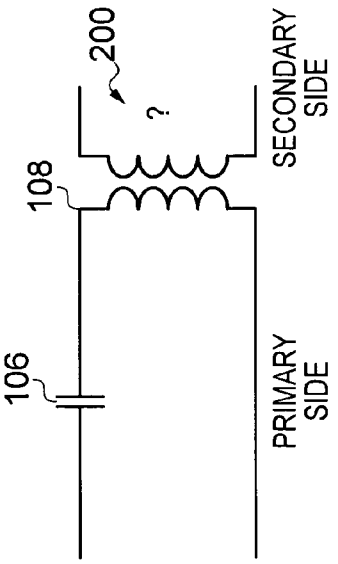

FIG. 4A

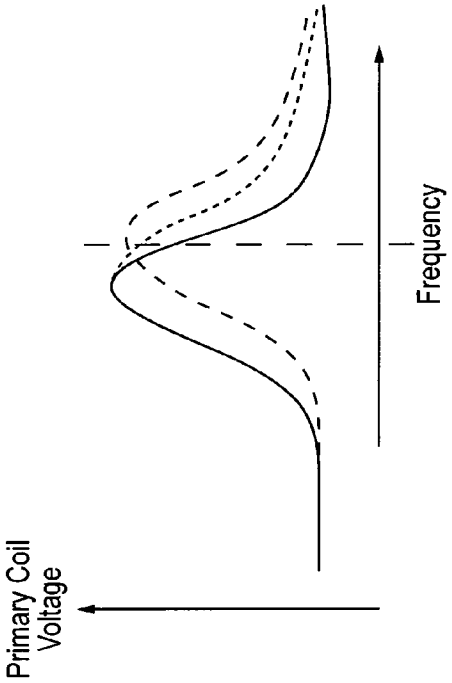

FIG. 4B

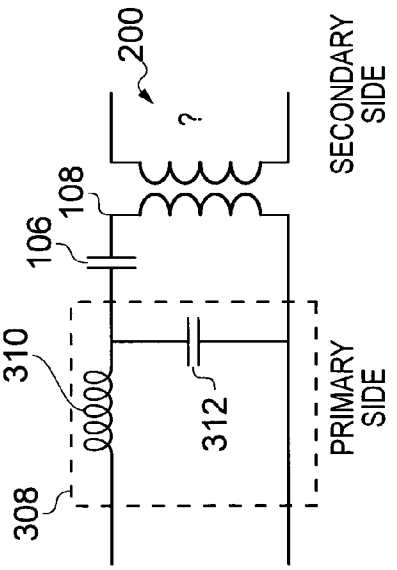

FIG. 4C

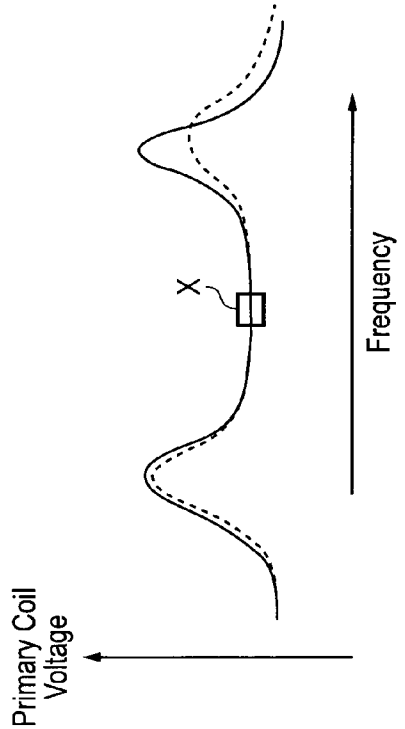

FIG. 4D

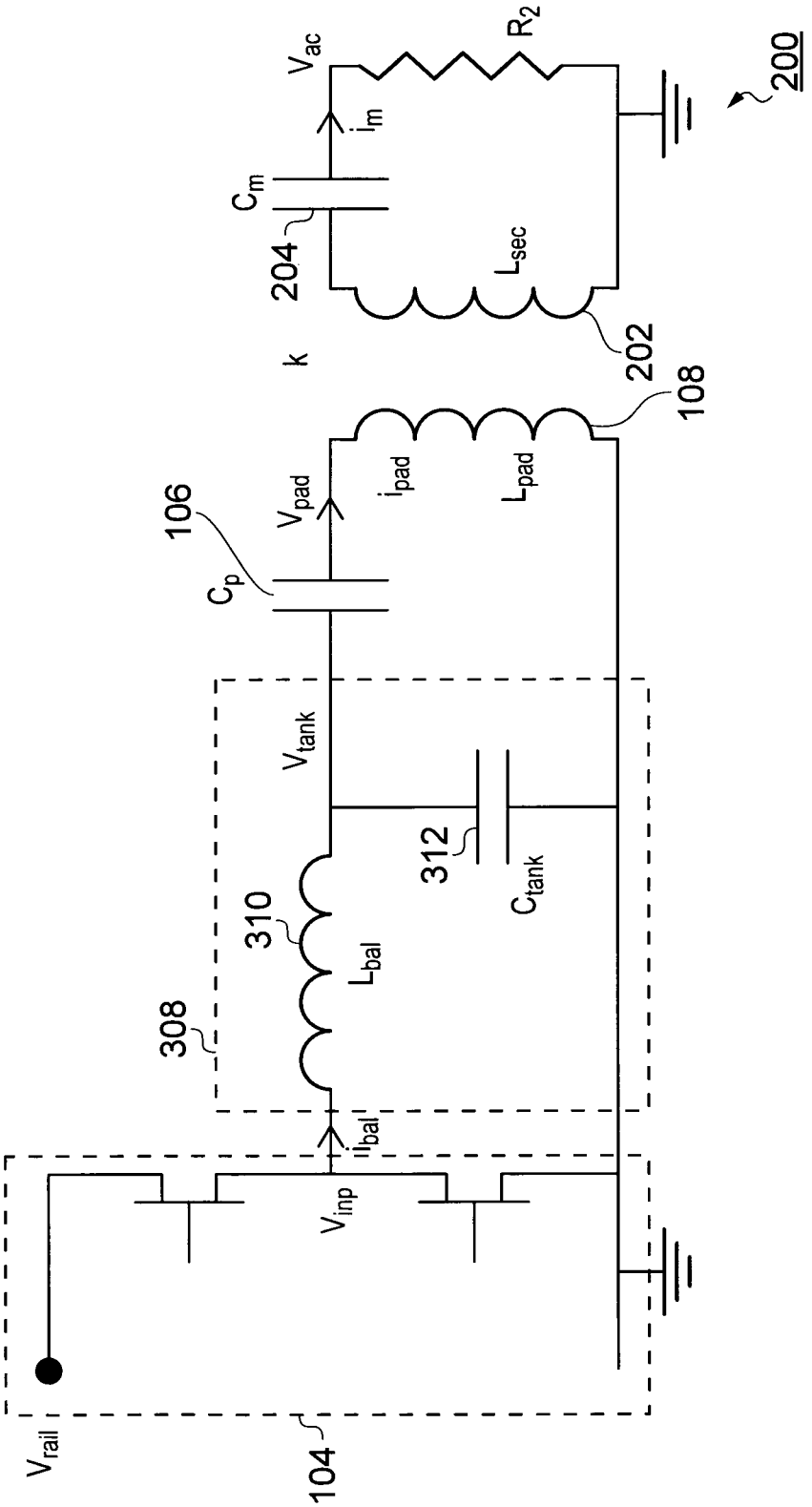
200
V_{ac}
R_2
i_m
C_m
204
L_{sec}
202
k
108
i_{pad}
L_{pad}
106
V_{pad}
C_p
V_{tank}
312
C_{tank}
310
L_{bal}
308
i_{bal}
V_{inp}
V_{rail}
104

FIG. 5

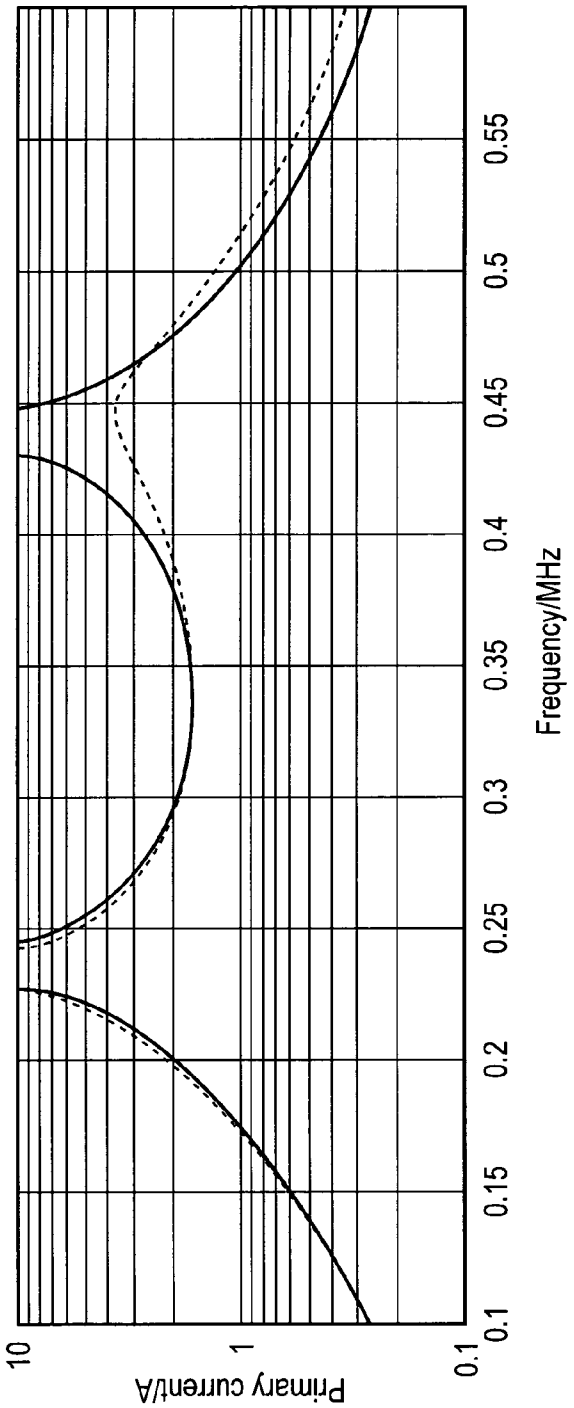

—— no secondary

- - - - - secondary - full power

Tank+ballast:	Lbal = 10μH	Ctank = 24.353nF	Vinp = 34V	f_tb = 0.323MHz
Primary circuit:	Lp = 25μH	Cp = 9.741nF		f_p = 0.323MHz
Seconday circuit:	Lm = 9μH	Cm = 27.059nF	R2 = 22Ω	f_m = 0.323MHz

FIG. 6

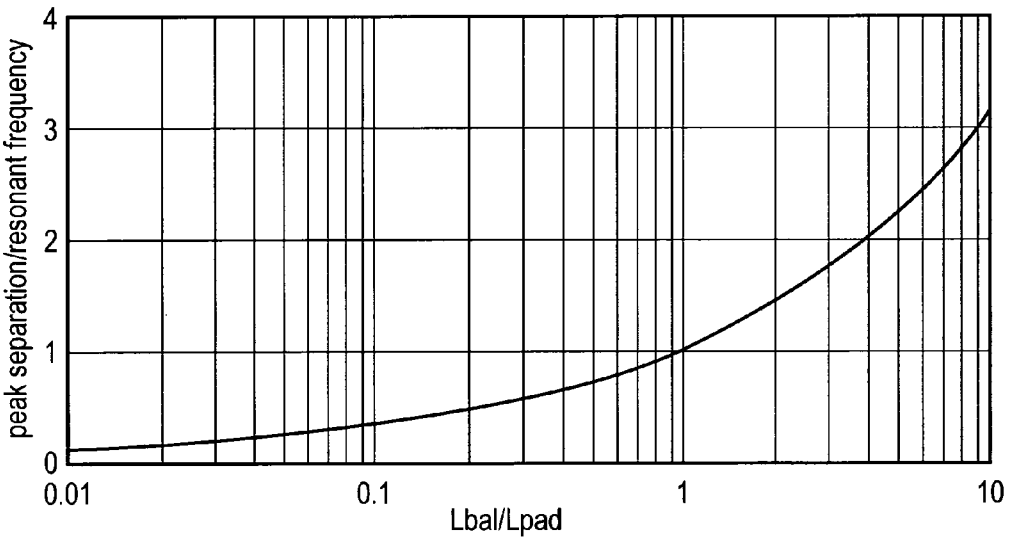
peak separation/resonant frequency
4
3
2
1
0
0.01
0.1
1
10
Lbal/Lpad

FIG. 7

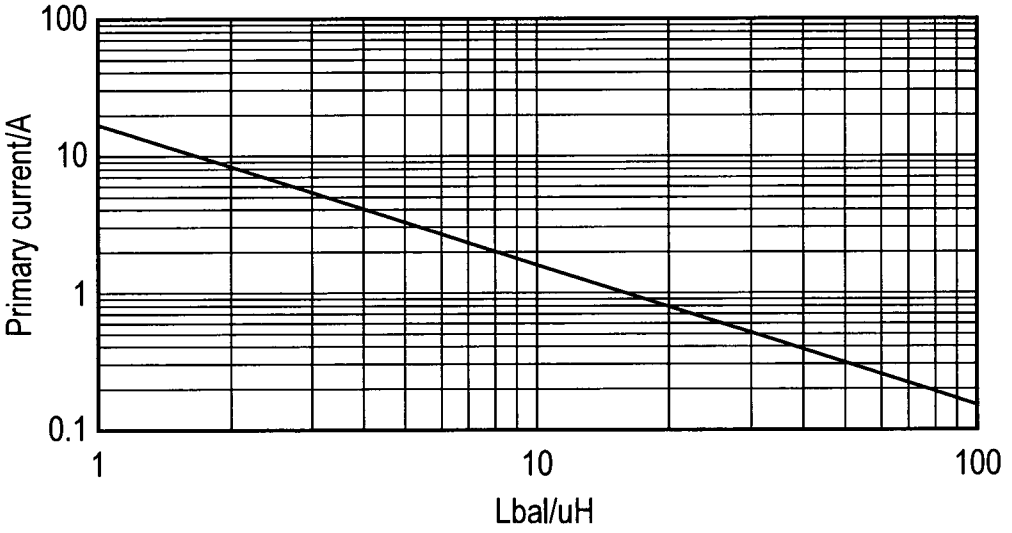

FIG. 8

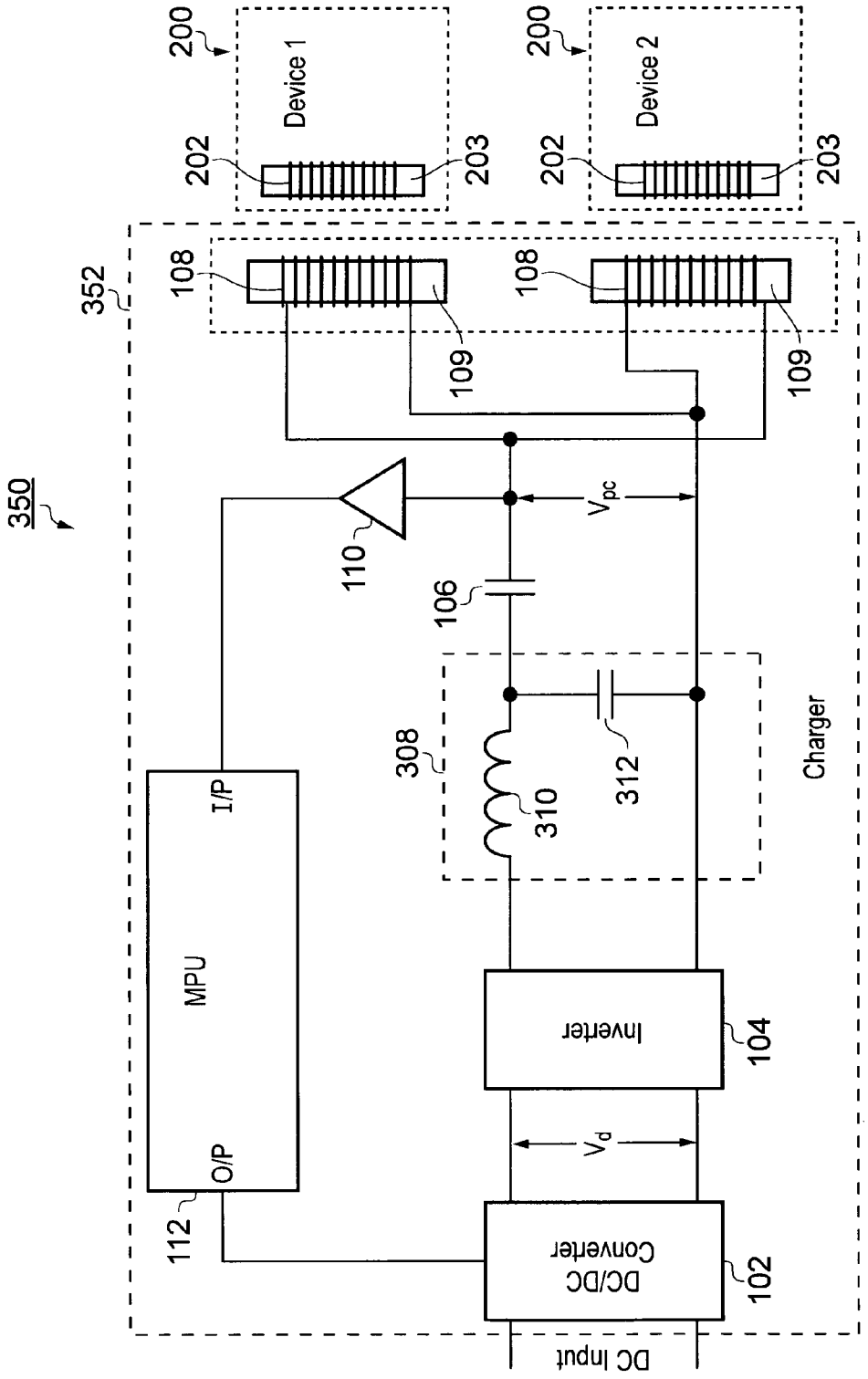
350
352
200
Device 1
202
203
200
Device 2
202
203
108
109
108
109
110
V_{pc}
106
308
310
312
Charger
MPU
I/P
O/P
112
Inverter
104
V_d
DC/DC Converter
102
DC Input

FIG. 9

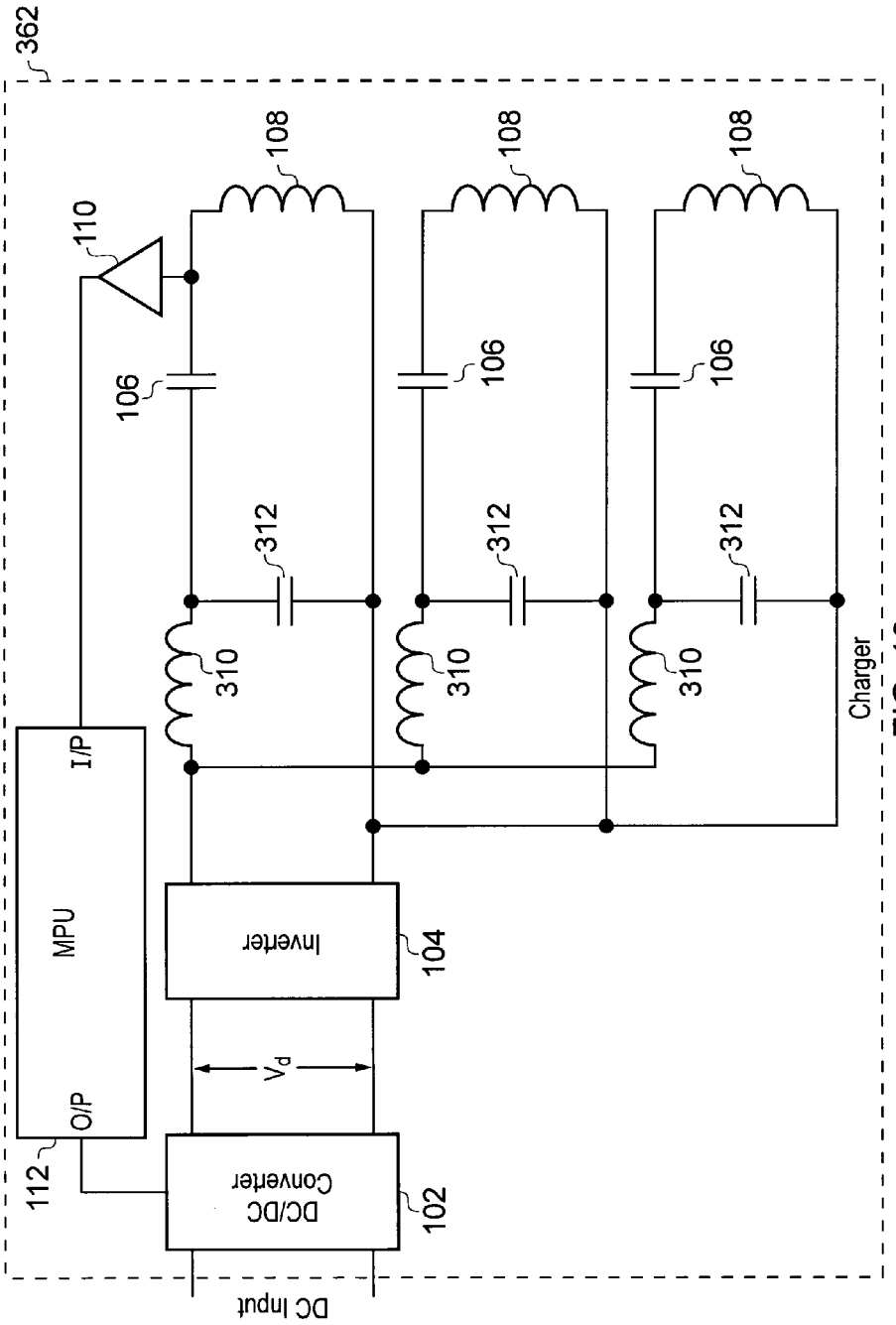
362
110
108
108
108
106
106
106
312
312
312
310
310
310
I/P
MPU
O/P
112
Inverter
104
V_d
DC/DC
Converter
102
DC Input
Charger

FIG. 10

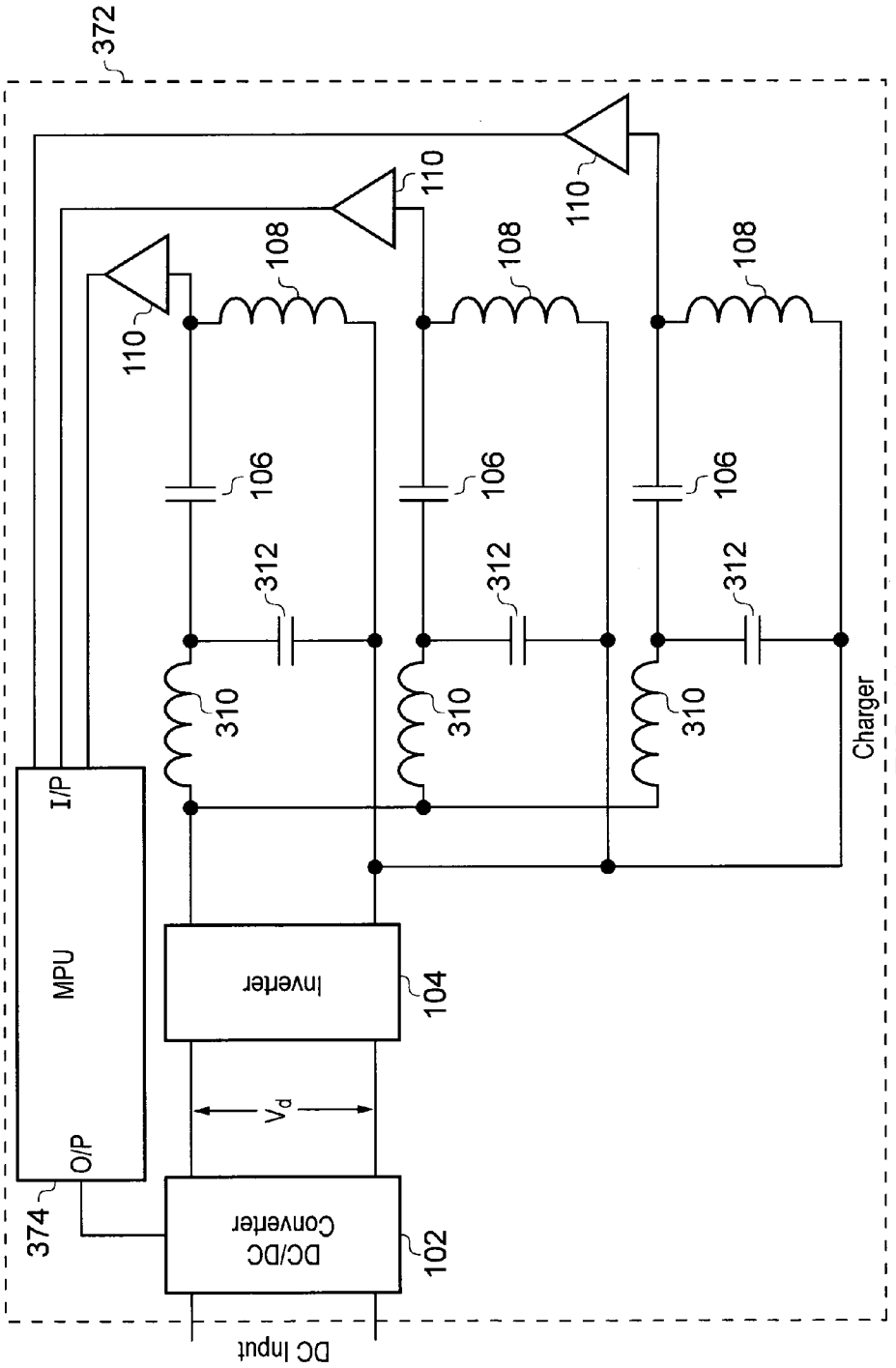
372
110
110
110
108
108
108
106
106
106
312
312
312
310
310
310
I/P
MPU
O/P
374
Inverter
104
V_d
DC/DC
Converter
102
DC Input
Charger

FIG. 11

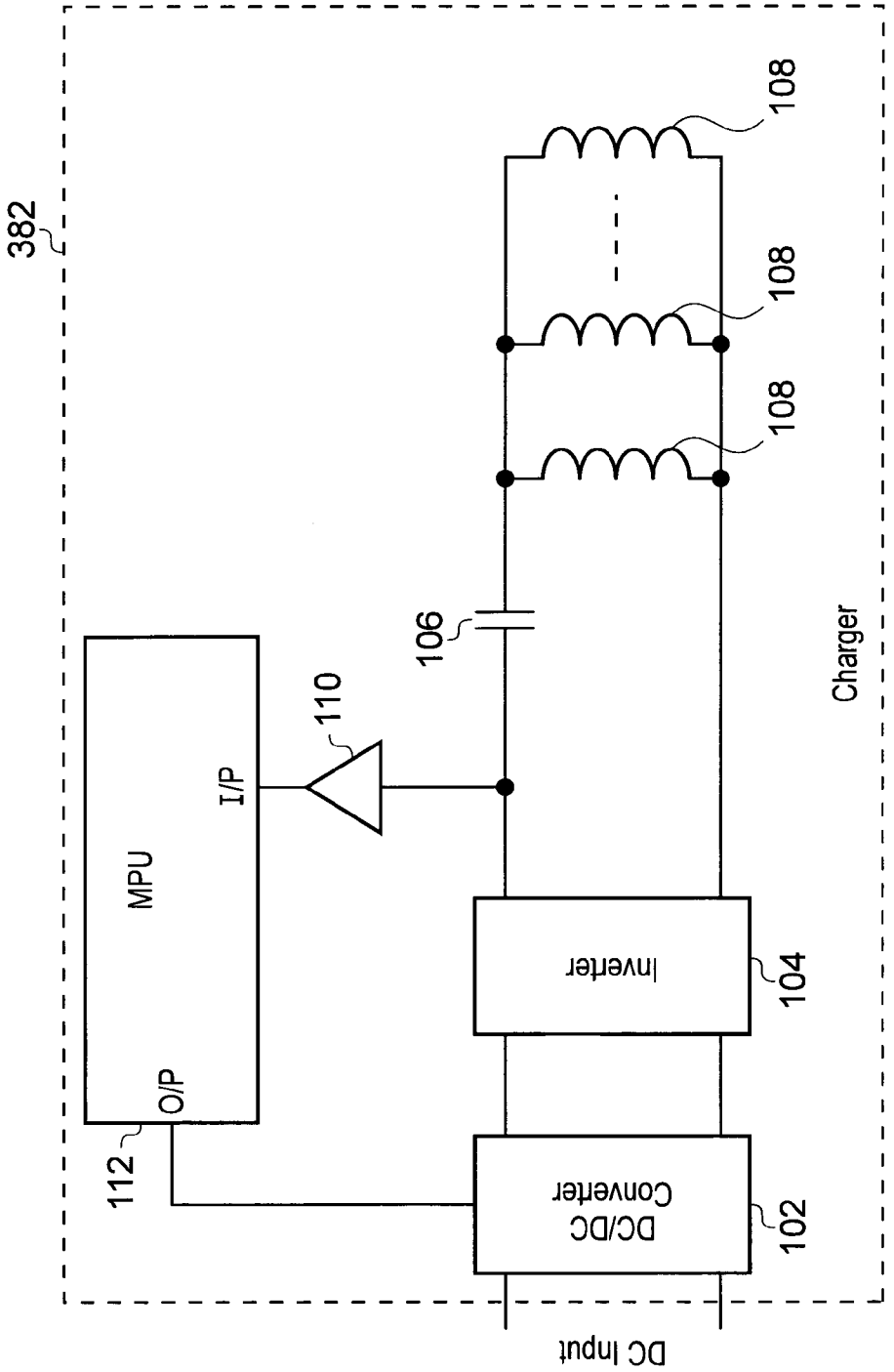
382
MPU
I/P
O/P
112
110
106
108
108
108
Inverter
104
DC/DC
Converter
102
DC Input
Charger

FIG. 12

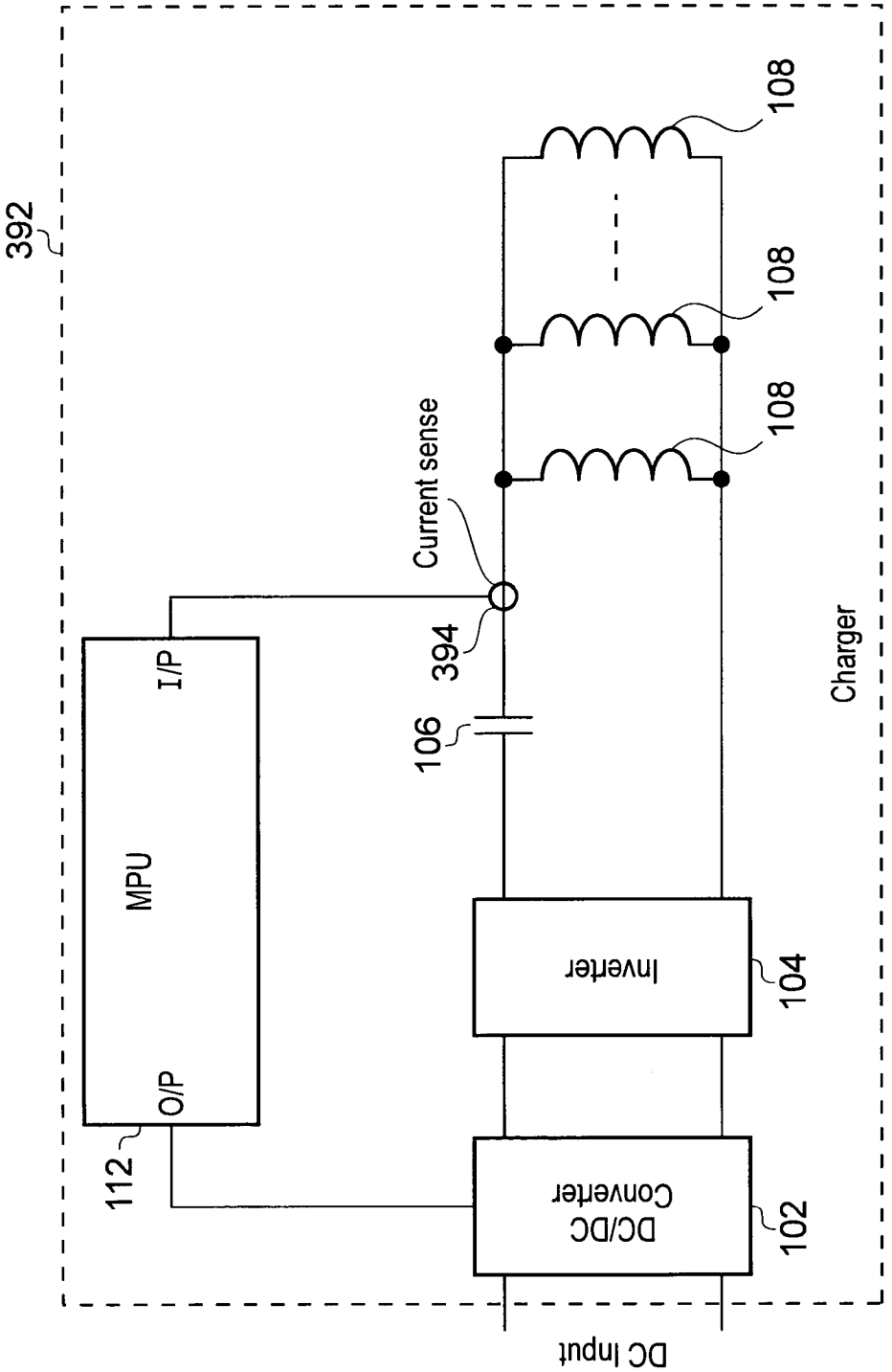
392
MPU
I/P
O/P
112
Current sense
394
106
Inverter
104
DC/DC
Converter
102
108
108
108
Charger
DC Input

FIG. 13

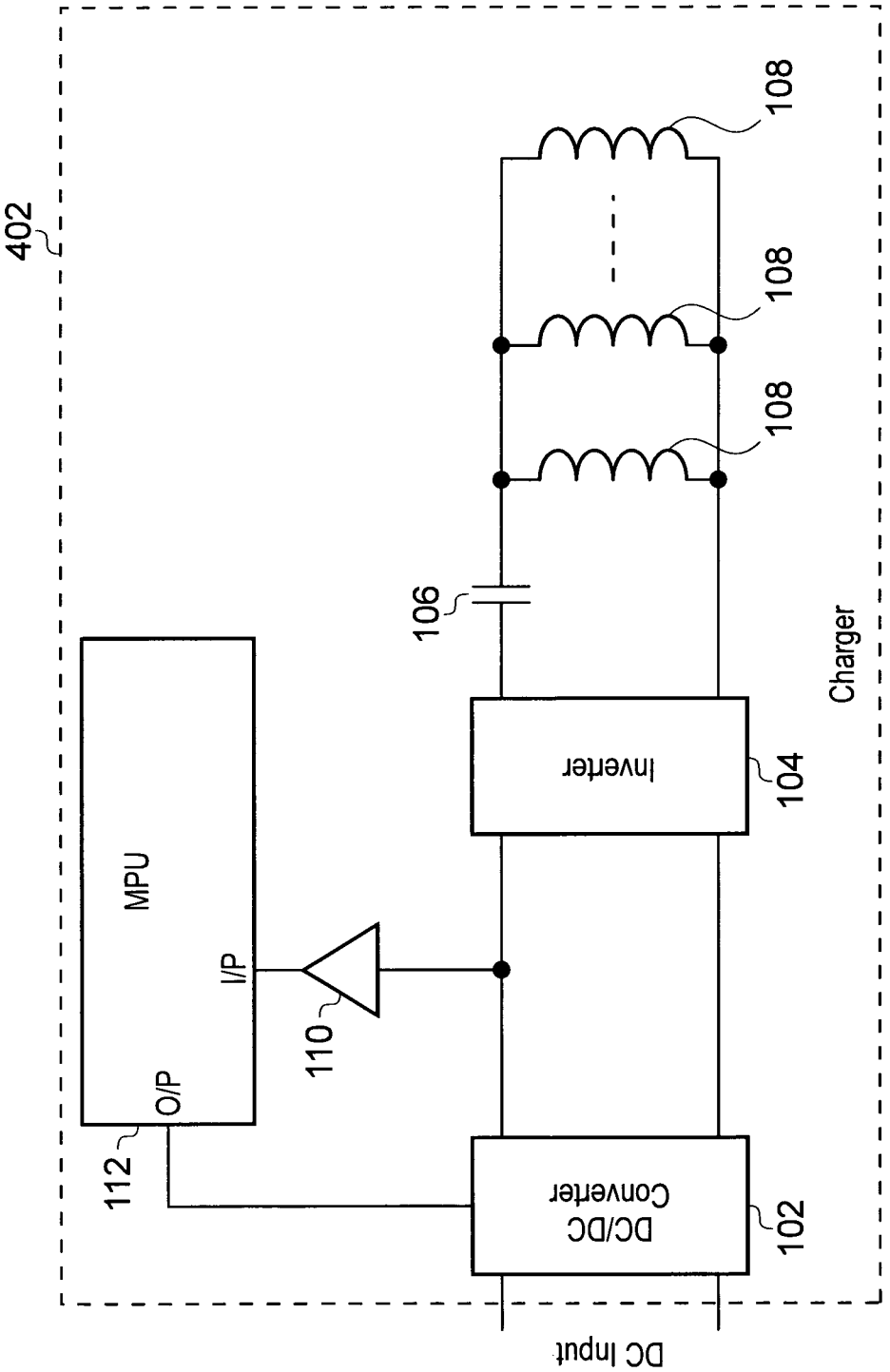
402
MPU
O/P
I/P
112
110
106
108
108
108
Inverter
104
DC/DC
Converter
102
DC Input
Charger

FIG. 14

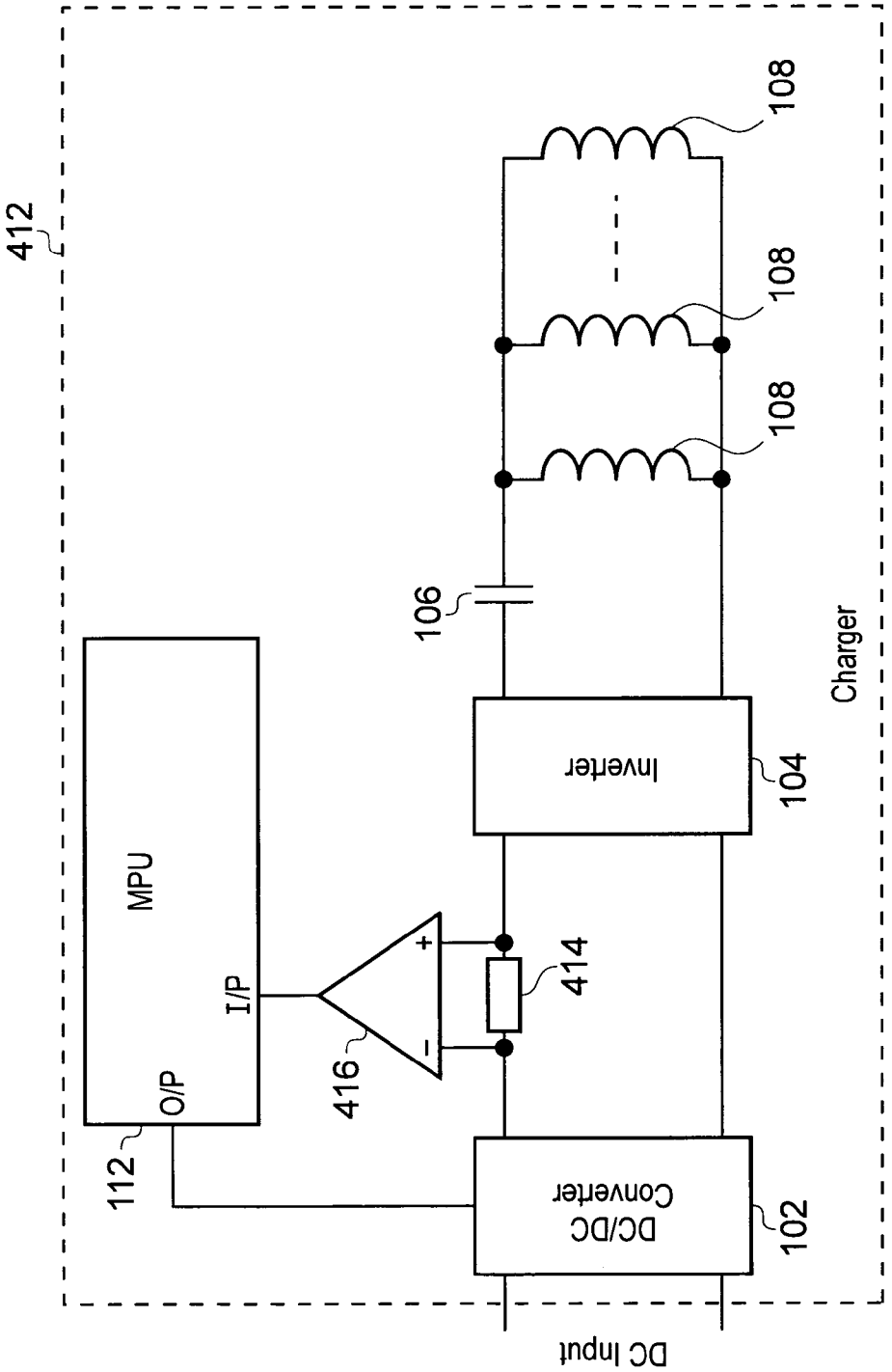
412
MPU
O/P
I/P
112
416
+
−
414
106
108
108
108
Inverter
104
DC/DC
Converter
102
DC Input
Charger

FIG. 15

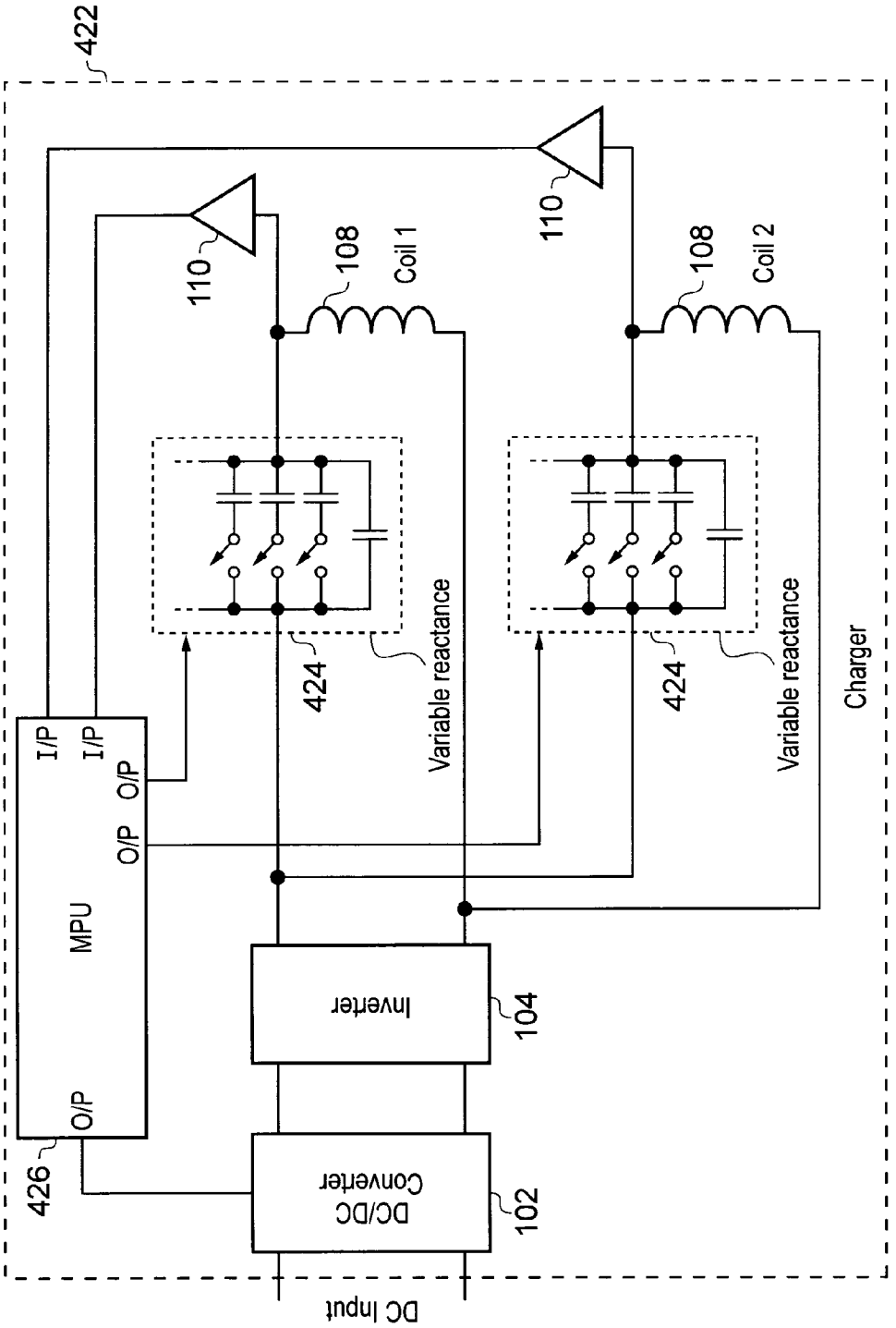
422
110
110
108
Coil 1
108
Coil 2
424
Variable reactance
424
Variable reactance
Charger
I/P
I/P
O/P
O/P
MPU
O/P
426
Inverter
104
DC/DC
Converter
102
DC Input

FIG. 16

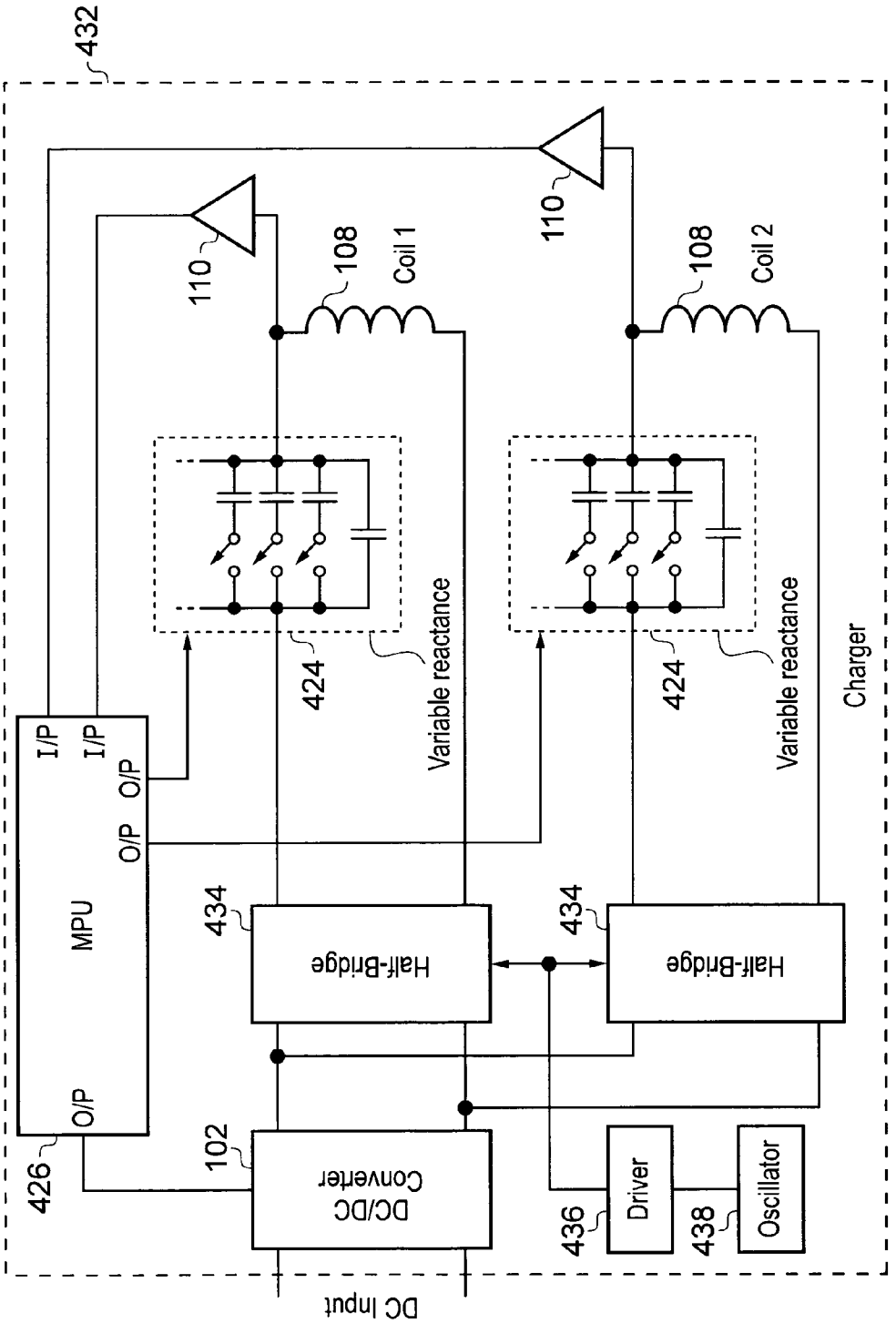
432
110
110
108
Coil 1
108
Coil 2
424
Variable reactance
424
Variable reactance
Charger
I/P
I/P
O/P
O/P
O/P
MPU
426
434
Half-Bridge
434
Half-Bridge
102
DC/DC
Converter
436
Driver
438
Oscillator
DC Input

FIG. 17

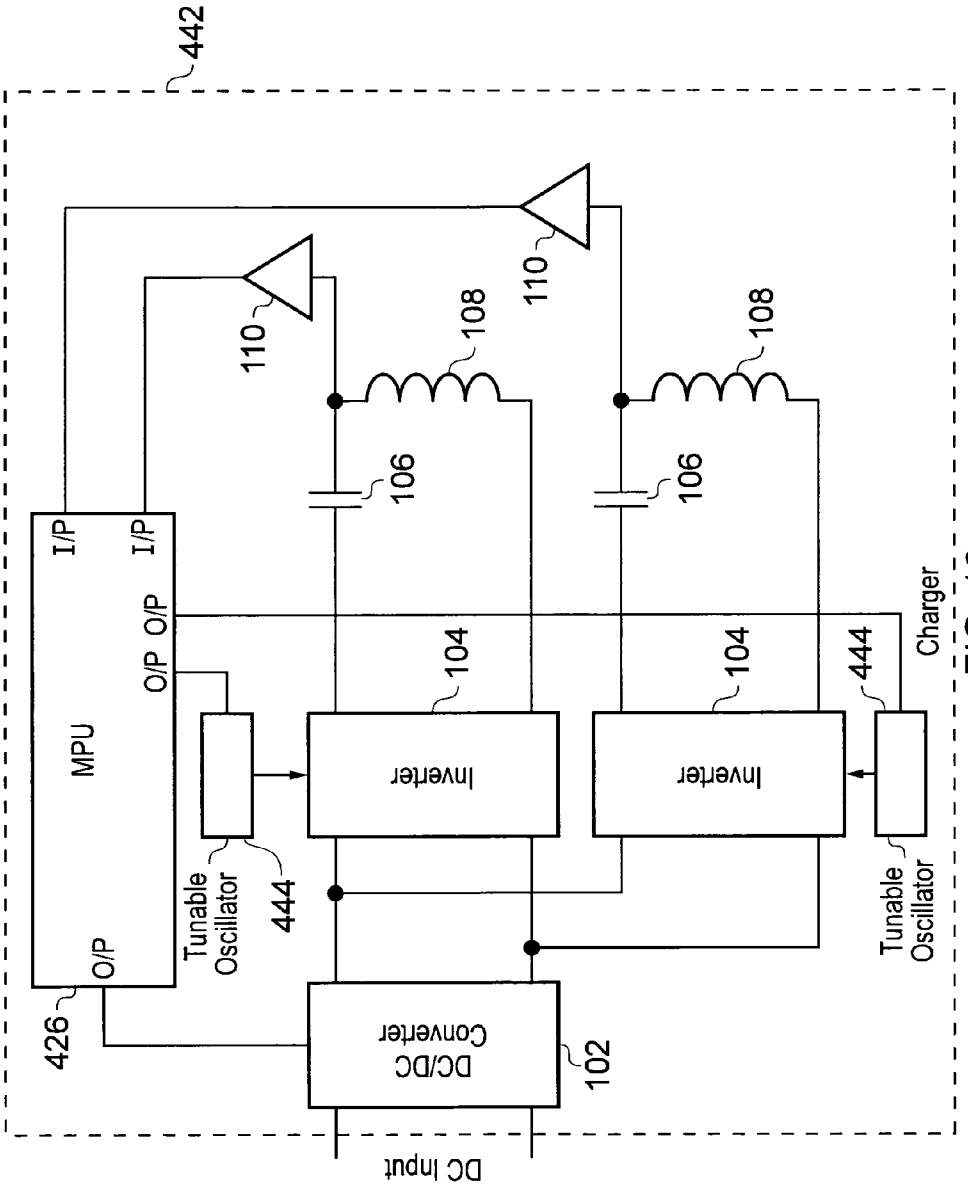
442
MPU
I/P
I/P
O/P
O/P
O/P
426
Tunable Oscillator
444
110
110
108
108
106
106
104
104
Inverter
Inverter
DC/DC Converter
102
DC Input
Tunable Oscillator
444
Charger

FIG. 18

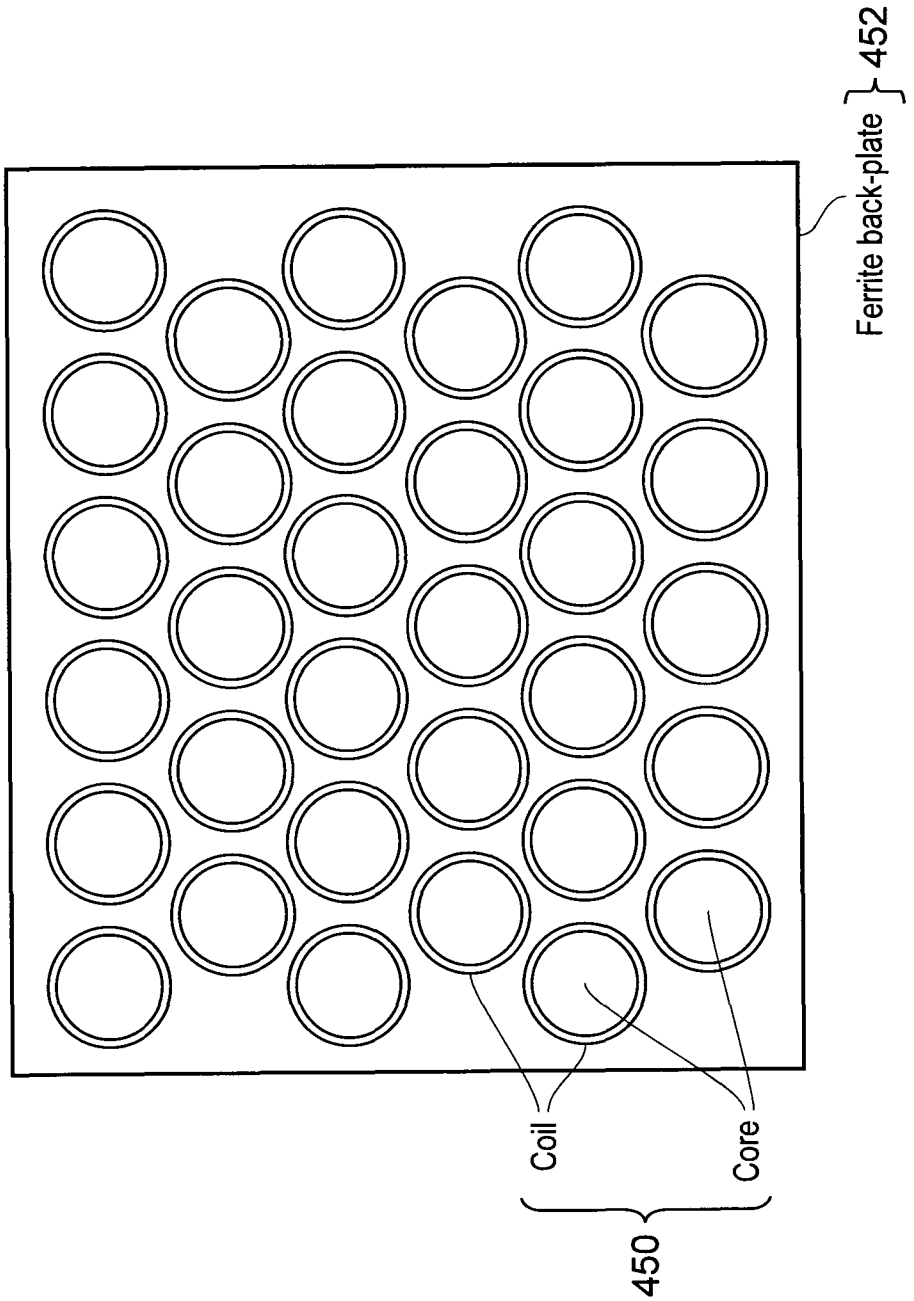

FIG. 19

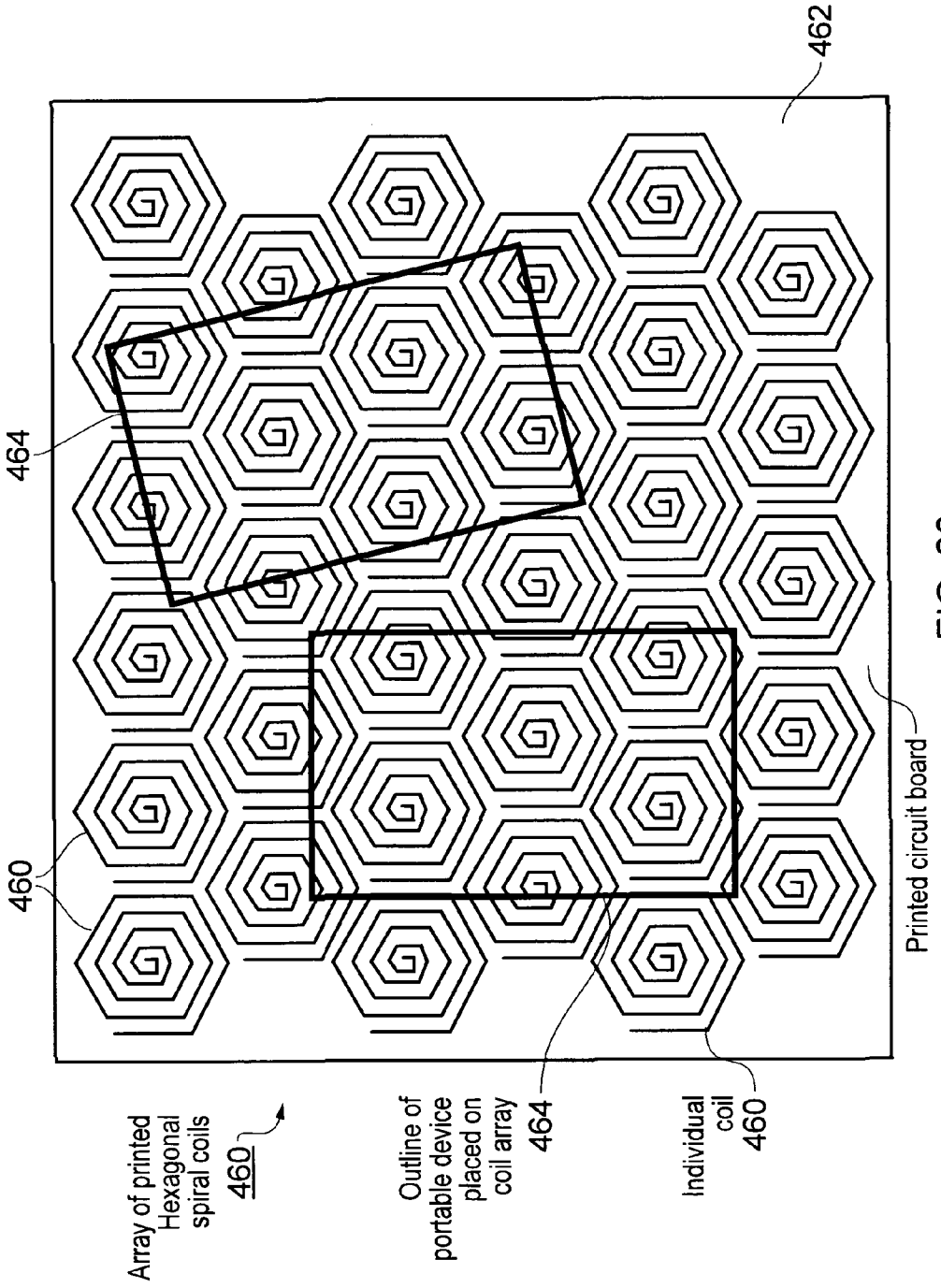
462
464
460
Array of printed Hexagonal spiral coils 460
Outline of portable device placed on coil array 464
Individual coil 460
Printed circuit board

FIG. 20

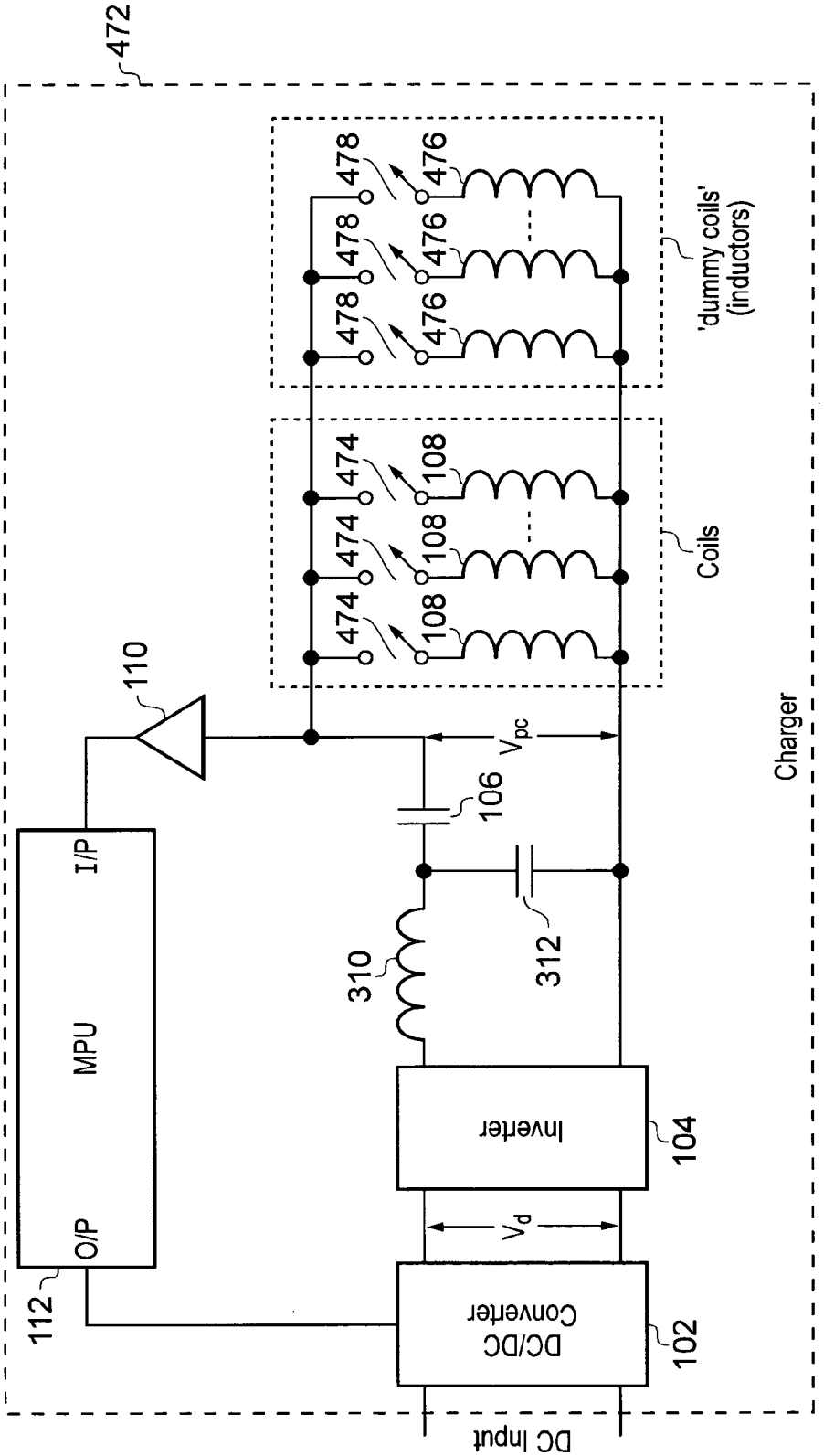
472
478
476
'dummy coils'
(inductors)
474
108
Coils
110
V_{pc}
106
I/P
MPU
O/P
310
312
Inverter
104
V_d
112
DC/DC
Converter
102
DC Input
Charger

FIG. 21

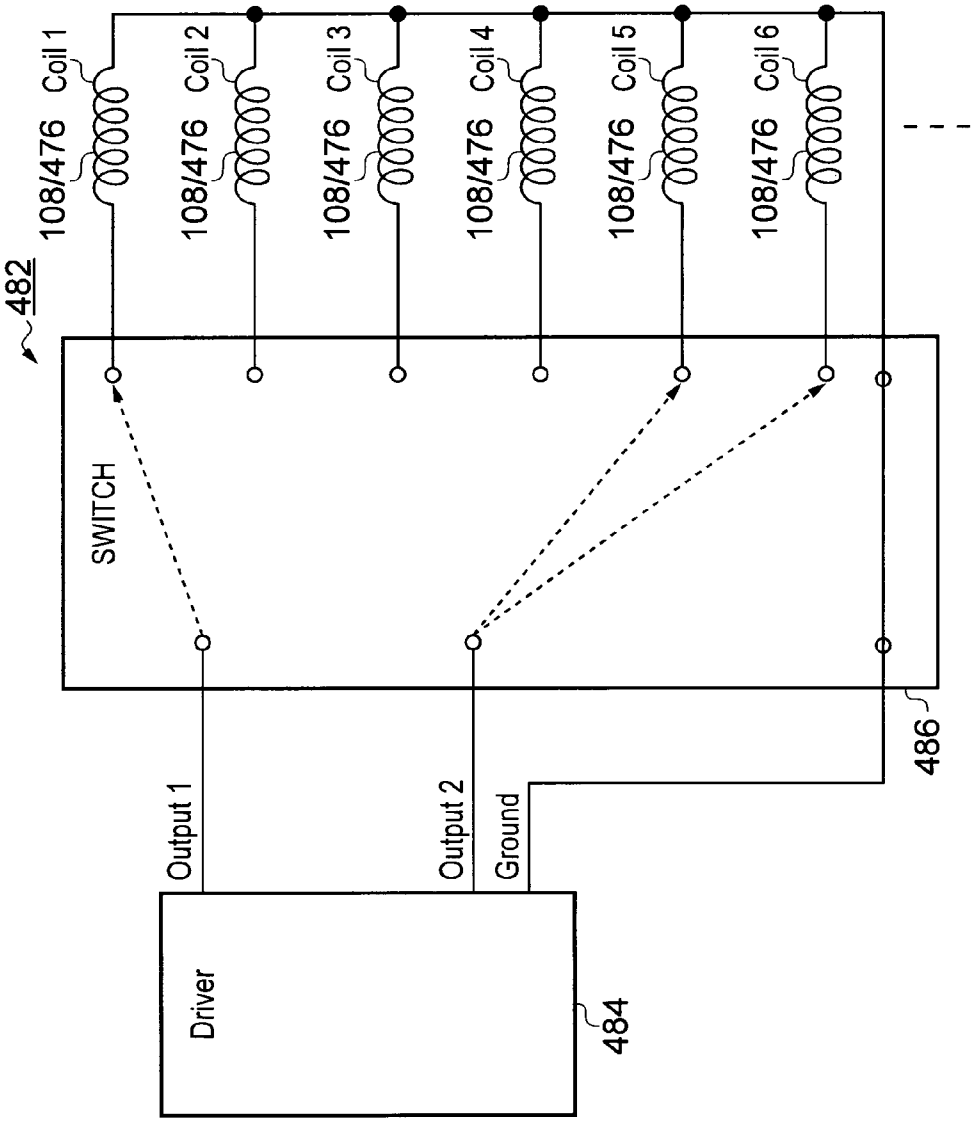
482
108/476
Coil 1
108/476
Coil 2
108/476
Coil 3
108/476
Coil 4
108/476
Coil 5
108/476
Coil 6
SWITCH
Output 1
Output 2
Ground
486
Driver
484

FIG. 22

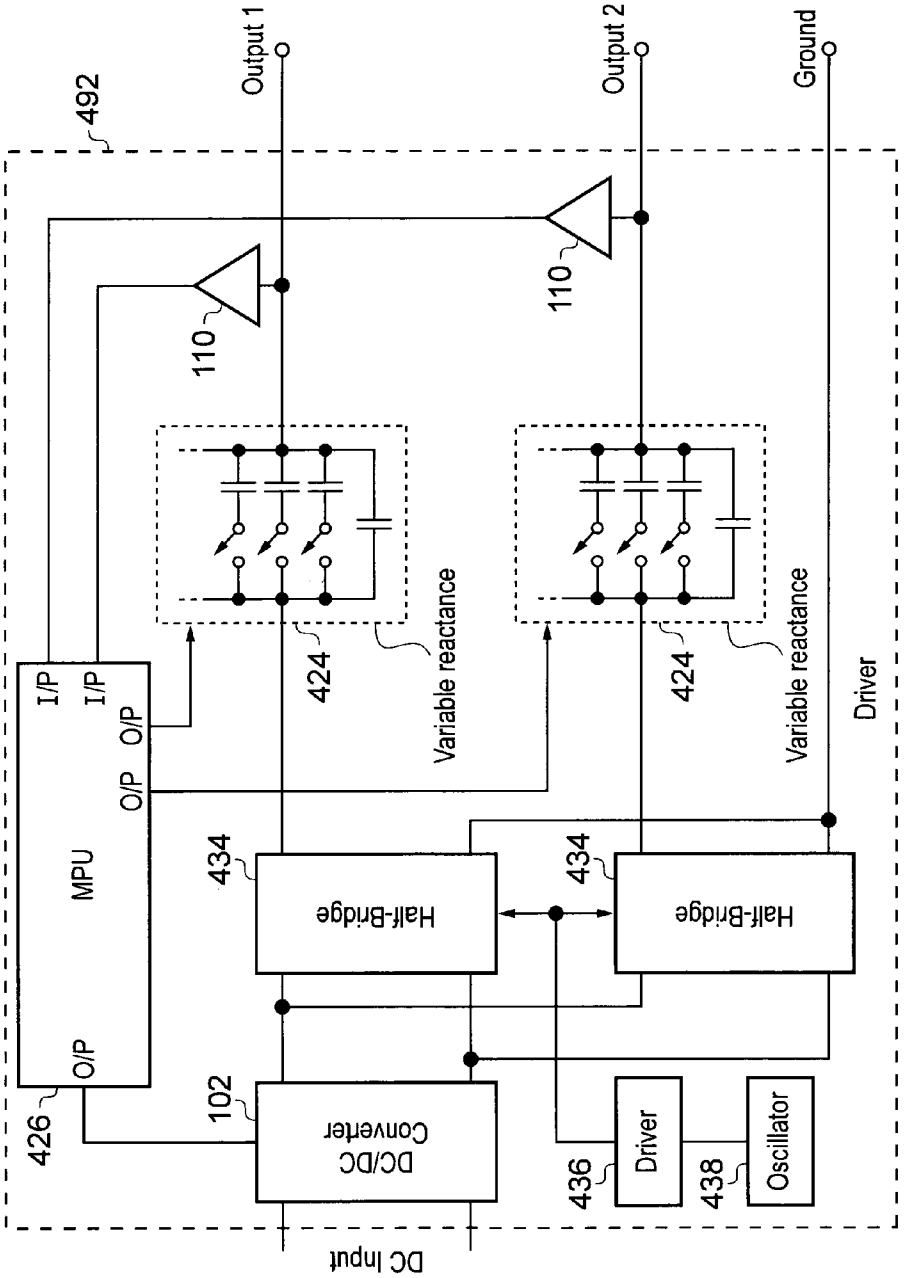
492
Output 1
Output 2
Ground
110
110
424
Variable reactance
424
Variable reactance
Driver
I/P
I/P
O/P
O/P
MPU
O/P
426
434
Half-Bridge
434
Half-Bridge
102
DC/DC Converter
436
Driver
438
Oscillator
DC Input

FIG. 23

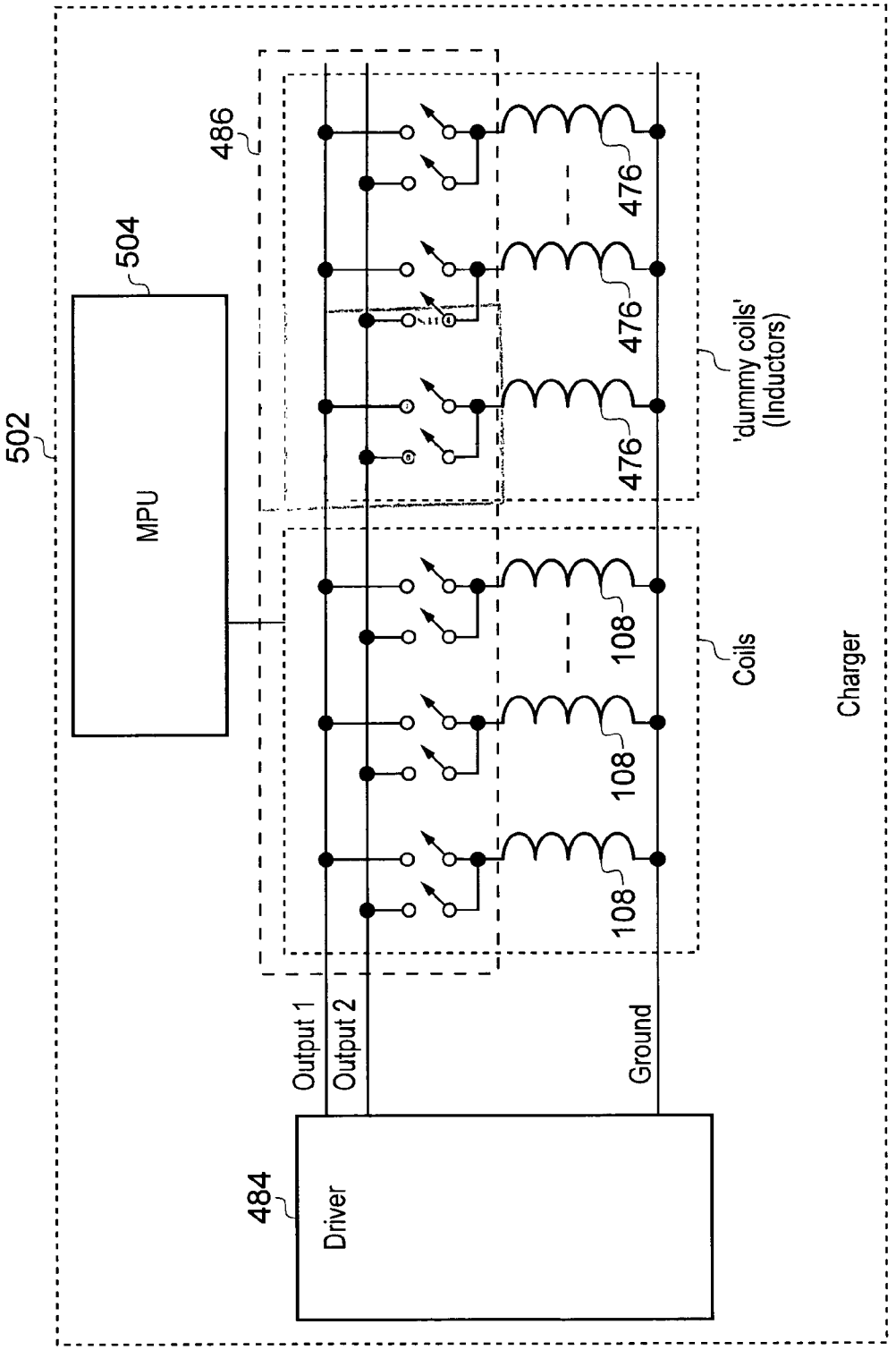
502
MPU
504
486
476
476
476
'dummy coils'
(Inductors)
108
108
108
Coils
Charger
Output 1
Output 2
Ground
484
Driver

FIG. 24

CIRCUITRY FOR INDUCTIVE POWER TRANSFER

The present invention relates to circuitry for use in inductive power transfer systems, for example, to power portable electrical or electronic devices.

Inductive power transfer systems suitable for powering portable devices may consist of two parts:

A primary unit having at least one primary coil, through which it drives an alternating current, creating a time-varying magnetic flux.

A secondary unit, separable from the primary unit, having a secondary coil.

When the secondary coil is placed in proximity to the time-varying flux created by the primary coil, the varying flux induces an alternating current in the secondary coil, and thus power may be transferred inductively from the primary unit to the secondary unit.

Generally, the secondary unit supplies the transferred power to an external load, and the secondary unit may be carried in or by a host object (a secondary device) which includes the load. For example, the host object may be a portable, electrical or electronic device having a rechargeable battery or cell. In this case, the load may be a battery charger circuit for charging the battery or cell. As another option, the secondary unit may be incorporated in such a rechargeable cell or battery (secondary device), together with a suitable battery charger circuit.

It is desirable for a primary unit in such systems to have a plurality of primary coils, for example to transfer power to a plurality of secondary units simultaneously or to provide such secondary units with positional freedom of placement relative to the primary unit. That is, it is desirable to transfer power to two or more secondary units simultaneously with a single primary unit. A 1:1 relationship between primary coil and secondary unit is not essential, and the present invention extends to the use of more than one primary coil to transfer power to a secondary unit.

It is known to provide a primary unit in an inductive power transfer system with a plurality of primary coils. However, a number of cost-, performance- and complexity-related disadvantages have been identified in relation to circuitry in such known primary units, and indeed with primary units having a single primary coil. It is accordingly desirable to provide circuitry for use in primary units which does not suffer from one or more of the identified disadvantages, and primary units and inductive power transfer systems including such circuitry. It is also desirable to provide a primary unit in which multiple primary coils can be driven and controlled efficiently without having to significantly reproduce copies of the circuitry required to drive and control a single primary coil. It is also desirable to provide a primary unit whose circuitry is desensitised to changes in its relationship with a secondary unit, or, for example, to differences between one secondary unit and the next.

According to an embodiment of a first aspect of the present invention, there is provided circuitry for use in a primary unit of an inductive power transfer system to generate an electromagnetic field so as to transfer power wirelessly by electromagnetic induction to one or more secondary units of the system, the or each secondary unit being separable from the primary unit, the circuitry including: a plurality of drivable portions, each portion including a primary coil or a dummy coil; driving means (e.g. driving circuitry) operable to supply both or at least two of said portions with drive signals so as to cause those driven portions that have a said primary coil to generate said electromagnetic field; and control means (e.g. control circuitry) operable, in dependence upon a feedback signal indicative of a characteristic of the primary or dummy coil of one or more of the driven portions, to control the circuitry so as to tend to regulate said feedback signal, wherein the circuitry is configured so that: those portions that are driven are connected together in parallel and have a tuned resonant response; and said control tends to regulate such a characteristic of each of said driven coils.

The characteristic (e.g. an electrical characteristic) of such a coil may be a magnitude of a coil signed over that coil, or a characteristic which varies as a function of a magnitude of a coil signal over that coil.

The portions may be permanently connected together in parallel, or may be connectable together in parallel temporarily for driving, for example with switches. The feedback-based control may be, for example, carried out by means of a microprocessor unit, which may also carry out control of such switches.

In one embodiment, each drivable portion includes substantially only its said primary coil or dummy coil. Such an embodiment may be advantageous in terms of needing minimum replication of circuitry to increase the number of primary or dummy coils. Minimising replication may be beneficial in cost terms, and may enable elegant control as compared to replicating drive and control circuitry.

The feedback signal may be indicative of a magnitude of a voltage or power signal commonly over the coils of the driven portions.

The circuitry may include a capacitance configured to be commonly connected in series with those portions that are driven. Such a capacitance may effectively tune the portions to have a resonant response.

The circuitry may be configured such that, during a driving period: the drive signals have a particular fundamental frequency; the capacitance has a particular capacitance value; and the portions that are driven have a combined particular (self) inductance value. The circuitry may be configured such that, during the driving period, the portions that are driven always have substantially the combined particular (self) inductance value. Such circuitry may be considered elegant in its design, and such embodiments may be considered beneficial in cost terms.

Those portions that are driven during one interval of the driving period in one embodiment are not the same portions that are driven during another such interval of the driving period. In such an embodiment, it may be possible to selectively drive different portions at different times. For example, if such portions are provided in an array, portions in a part of the array corresponding to the location of a secondary unit to be supplied power to may be selectively driven.

The particular capacitance value may be such that the portions that are driven are resonant at the particular fundamental frequency. That is, in one embodiment the particular capacitance value may be chosen such that the circuitry is resonant at the particular fundamental frequency when a particular number of portions are driven simultaneously. The capacitance may have a fixed capacitance value and the drive signals may have a fixed fundamental frequency.

The portions may be configured to have substantially the same inductance as one another, and the circuitry may be configured such that the number of portions driven during one interval of the driving period is the same as the number of portions driven during another interval of the driving period. In this scenario, the number of primary coils driven may differ over time, with the number of dummy coils driven varying over time in a corresponding manner. For example, it may be desirable to vary which primary coils are driven (and even the

number of them that are driven) at a particular time in dependence upon the position/orientation of one or more secondary units relative to an array of such primary coils in the primary unit. When it is desirable to drive fewer primary coils, it may be desirable to drive more dummy coils to compensate for the drop in number of driven primary coils.

In one embodiment, the circuitry may be configured such that those portions that are driven have in common a frequency response having two main resonant peaks and a substantially flat portion therebetween, or some other response with a substantially flat portion, which portion does not vary significantly with changing effective inductance in the circuitry due to coupling between a primary coil and a secondary unit. In such an embodiment, the drive signals may have a fundamental frequency positioned in that flat portion.

Those portions that are driven may be configured such that they are connected in common with a series capacitance and a ballast circuit (for example, an LC ballast circuit), and the series capacitance and ballast circuit may be configured such that those portions that are driven have in common such a frequency response.

The circuitry may be configured such that those portions that are driven have a combined inductance L_1, and such that the series capacitance has a capacitance C_1, and such that the values of L_1 and C_1 are configured so that $f_0=1/(2\pi\sqrt{L_1C_1})$, where f_0 is the fundamental frequency.

The ballast circuit may have an inductance L_2 in series with the capacitance C_1 and a capacitance C_2 in parallel with the series-connected capacitance C_1 and inductance L_1, and the values of L_2 and C_2 may be configured such that $f_0=1/(2\pi\sqrt{L_2C_2})$, where f_0 is the fundamental frequency.

The values L_1 and L_2 may be configured such that two main resonant peaks are sufficiently far apart in frequency such that an effect of changes of effective inductance experienced due to coupling between a said primary coil and a said secondary unit on operation of the circuitry is substantially small. This may render such circuitry effectively stable given changes on the secondary side, and able to operate stably despite component tolerances. The values L_1 and L_2 may be configured such that $L_1/L_2=4$, approximately.

In one embodiment, each drivable portion may be configured such that, when driven, it has a frequency response having two main resonant peaks and a substantially flat portion therebetween, or some other response with a substantially flat portion, which portion does not vary significantly with changing effective inductance in the circuitry due to coupling between a primary coil and a secondary unit. In such an embodiment, the drive signals may have a fundamental frequency positioned in that flat portion.

The drivable portions may be configured to have substantially the same such frequency responses as one another, when driven. This may lead to simplicity in design and control, and thus to a low-cost embodiment. The drivable portions may, for example, have substantially the same configuration as one another. Each drivable portion may include a capacitance in series with its coil, and a ballast circuit (such as an LC ballast circuit), and, for each such drivable portion, its coil, its series capacitance and its ballast circuit may be configured such that that drivable portion has such a frequency response when driven. For example, the inductance of a primary coil (or each primary coil) may be substantially the same as the inductance of a dummy coil (or each dummy coil), the series capacitances in the drivable portions may be substantially the same as one another, the ballast circuits in the drivable portions may be substantially the same as one another, and the coils, the series capacitances and the ballast circuits may be configured in substantially the same way in each of the drivable portions.

For each driveable portion, the coil may have an inductance L_1 and the series capacitance may have a capacitance C**1**, and the values of L_1 and C_1 may be configured such that $f_0=1/(2\pi\sqrt{L_1C_1})$, where f_0 is said fundamental frequency. For each drivable portion, the ballast circuit may have an inductance L_2 in series with the capacitance C_1 and a capacitance C_2 in parallel with the series-connected capacitance C_1 and coil, and the values of L_2 and C_2 may be configured such that $f_0=1/(2\pi\sqrt{L_2C_2})$, where f_0 is the fundamental frequency.

For each said drivable portion, the values L_1 and L_2 may be configured such that the two main resonant peaks are sufficiently far apart in frequency such that an effect of changes of effective inductance experienced due to coupling between its coil and a secondary unit on operation of that portion is substantially small. This may render the portions effectively stable given changes on the secondary side, and able to operate stably despite component tolerances. The values L_1 and L_2 may be configured such that $L_1/L_2=4$, approximately.

The circuitry may be configured such that the feedback signal is obtained from only one of the portions that are driven. The feedback signal may be indicative of a voltage or current or power signal over the primary coil or dummy coil of that portion. It is advantageous to only need a feedback signal from one of the portions, in terms of simplicity of control circuitry, and thus minimisation of cost.

The circuitry may be configured such that a separate such feedback signal is obtained from each of the portions that are driven, and the control means may be operable to carry out its control in dependence on one or more of the feedback signals. The control means may be operable to carry out its control in dependence upon all of the feedback signals, or any subset of those signals, optionally in dependence upon the number and/or position/orientation of secondary units receiving power from the circuitry.

In one embodiment, the circuitry may be configured such that a separate such feedback signal is obtained from each of the portions that are driven and/or from the or each secondary unit receiving power inductively from the circuitry, each or each but one of the drivable portions may include a controllable element, and the control means may be operable in response to the feedback signals to carry out its control by controlling the controllable elements.

Separate control per portion, or control of the portions relative to one another, may be provided by such an embodiment. For example, the control means may be operable to employ the controllable elements to regulate the characteristics of (e.g. the coil signals over) the driven coils relative to one another.

The or each controllable element may be a variable reactance. The or each controllable element may be a variable capacitance. The or each controllable element may be operable under such control to vary a fundamental frequency of the drive signal in its portion. The or each controllable element may be a tuneable inverter or half-bridge circuit.

Each drivable portion may have a capacitance in series with its coil, which may be such a controllable element.

The or each dummy coil may be an inductor which, when driven, does not generate an electromagnetic field. Such an inductor may be shielded or designed not to radiate when driven. The inductance of a dummy coil (or each dummy coil) may be substantially the same as the inductance of a primary coil (or each primary coil).

The coils when driven may have the same polarity as one another, or one or more of them may have a different polarity from one or more others of them.

According to an embodiment of a second aspect of the present invention, there is provided circuitry for use in a primary unit of an inductive power transfer system to generate a time-varying electromagnetic field so as to transfer power wirelessly by electromagnetic induction to a secondary unit of the system, the secondary unit being separable from the primary unit, the circuitry including: a drivable portion including a primary coil; and driving means (e.g. driving circuitry) operable to supply the drivable portion with a drive signal having a predetermined fundamental frequency so as to cause the primary coil to generate said electromagnetic field, wherein: the drivable portion is configured such that, when driven it has a frequency response having two main resonant peaks and a substantially flat portion therebetween, or some other response with a substantially flat portion, which portion does not vary significantly with changing effective inductance in the circuitry due to coupling between the primary coil and a said secondary unit; and the driving means is configured such that said fundamental frequency is positioned in frequency between said main resonant peaks and in said flat portion.

The portion, when driven, may be configured such that its primary coil is connected in series with a capacitance and to a ballast circuit (for example, an LC ballast circuit), and the primary coil, series capacitance and ballast circuit may be configured to have such a frequency response when driven.

The primary coil may have an inductance (self-inductance) L_1 and the series capacitance may have a series capacitance C_1, and the values of L_1 and C_1 may be configured such that $f_0=1/(2\pi\sqrt{L_1C_1})$, where f_0 is the fundamental frequency. The ballast circuit may have an inductance L_2 in series with the capacitance C_1 and a capacitance C_2 in parallel with the series-connected capacitance C_1 and the primary coil, when the drivable portion is driven, and the values of L_2 and C_2 may be configured such that $f_0=1/(2\pi\sqrt{L_2C_2})$, where f_0 is the fundamental frequency.

The values L_1 and L_2 may be configured such that the two main resonant peaks are sufficiently far apart in frequency such that an effect of changes of effective inductance experienced due to coupling between the primary coil and a said secondary unit on operation of the circuitry is substantially small. This may render such circuitry effectively stable given changes on the secondary side, and able to operate stably despite component tolerances. The values L_1 and L_2 may be configured such that $L_1/L_2=4$, approximately.

According to an embodiment of a third aspect of the present invention, there is provided a primary unit for use in an inductive power transfer system, including circuitry according to the aforementioned first or second aspect of the present invention.

According to an embodiment of a fourth aspect of the present invention, there is provided an inductive power transfer system, including: a primary unit operable to generate an electromagnetic field; and at least one secondary unit, separable from the primary unit, configured to receive power wirelessly by electromagnetic induction from the primary unit when in proximity thereto, wherein the primary unit includes circuitry according to the aforementioned first or second aspect of the present invention.

It is envisaged that circuitry embodying the present invention may be configured in a form not having said coils, such that said coils may be added at a later time in time for use. The present invention therefore extends to aspects of the present invention corresponding respectively to the aforementioned aspects, not having such coils but being configured to be connected thereto.

The present invention may be extended to method aspects corresponding in scope to the aforementioned circuitry, primary unit and inductive power transfer system aspects.

According to a further aspect of the invention there is provided a primary unit for charging a secondary device, separable from the primary unit by electromagnetic induction, the primary unit including: at least two primary coils; an alternating voltage or current source, coupled to the at least two primary coils; a voltage or current or power sensor; wherein the primary unit measures the voltage, current, or power in at least one coil and adjusts the magnitude of the alternating voltage or current source, so as to maintain the at least two coils at substantially the same voltage, current or power.

According to a further aspect of the invention there is provided a method for charging a secondary device, separable from the primary unit, by electromagnetic induction, the method including the steps of: providing at least two primary coils; sensing the voltage, current or power at the primary coils; adjusting the voltage or current source, such that the two primary coils are maintained at substantially the same voltage, current or power.

According to a further aspect of the invention there is provided a primary unit for charging a secondary device, separable from the primary unit by electromagnetic induction, the primary unit including: at least two primary coils; an alternating voltage or current source coupled to the at least two primary coils; at least one variable impedance coupled to at least one primary coil; a voltage or current or power sensor; wherein the primary unit measures the voltage, current, or power in at least one coil and adjusts the variable impedance to vary the voltage, current, or power in the coil independently of the other coil.

According to a further aspect of the invention there is provided a method for charging a secondary device, separable from the primary unit, by electromagnetic induction, the primary unit including the steps of: providing at least two primary coils, supplying voltage, current or power to the at least two primary coils, and varying the impedance coupled to one of the coils such that the voltage, current or power delivered to said coil is varied independently of the other coil.

Reference will now be made, by way of example, to the accompanying drawings, of which:

FIG. **1** is a schematic diagram of a previously-considered inductive power transfer system;

FIG. **2** is a schematic diagram of a system according to one embodiment of the present invention;

FIG. **3** is a schematic diagram of a primary unit according to one embodiment of the present invention;

FIG. **4** presents a set of schematic diagrams useful for understanding the benefit of a ballast circuit in a primary unit according to one or more embodiments of the present invention;

FIG. **5** is a schematic diagram of a system according to one embodiment of the present invention, useful for performing simulations;

FIG. **6** is a graph of simulation results based on the FIG. **5** circuitry;

FIG. **7** is a graph of simulation results showing the effect of an inductor ratio on the separation between the resonant peaks;

FIG. **8** is a graph of simulation results showing the effect of the inductance value of a ballast inductor in the FIG. **5** circuitry on the current in the primary coil of the FIG. **5** circuitry;

FIG. **9** is a schematic diagram of a system according to one embodiment of the present invention;

FIG. **10** is a schematic diagram of a primary unit according to one embodiment of the present invention;

FIG. **11** is a schematic diagram of a primary unit according to one embodiment of the present invention;

FIGS. **12** to **15** are schematic diagrams of primary units respectively forming different embodiments of the present invention;

FIG. **16** is a schematic diagram of a primary unit according to one embodiment of the present invention;

FIG. **17** is a schematic diagram of a primary unit according to one embodiment of the present invention;

FIG. **18** is a schematic diagram of a primary unit according to one embodiment of the present invention;

FIGS. **19** and **20** are schematic diagrams of possible primary-coil layouts on charging surfaces of primary units according to some embodiments of the present invention;

FIG. **21** is a schematic diagram of a primary unit according to one embodiment of the present invention;

FIG. **22** is a schematic diagram of a primary unit representing a number of embodiments of the present invention;

FIG. **23** is a schematic diagram of a driver for use in one embodiment of the present invention; and

FIG. **24** is a schematic diagram of a primary unit according to one embodiment of the present invention.

For a better understanding of embodiments of the present invention, reference will first be made to an example inductive power transfer system **1** not directly embodying the present invention, but useful for understanding embodiments thereof.

FIG. **1** is a schematic diagram of system **1**. System **1** includes a primary unit (charger) **100** and a secondary unit (portable device, in this case) **200**.

Primary unit **100** includes a DC/DC converter **102**, an inverter **104**, a capacitor (or capacitance) **106**, a primary coil **108**, a buffer **110**, and a microprocessor unit (MPU) **112**. Secondary unit **200** includes a secondary coil **202**, a capacitor (or capacitance) **204**, a rectifier **206**, a DC/DC converter **208** and a load **210**. Buffer **110** may be considered to be a peak detector, and may be employed to measure the peak voltage over the primary coil **108**.

The primary unit **100** is configured to generate an electromagnetic field, and this field may be induced (as a horizontal or a vertical field, relative to a charging surface or power transfer surface of the primary unit) in proximity to the primary coil **108**. It will be appreciated that the configuration of the field is dependent on the configuration (i.e. physical layout) of the primary coil **108**. The electromagnetic field may be employed in the system **1** to transfer power to a secondary unit **200** requiring power located in proximity to the primary unit **100**.

The primary unit **100** may have any suitable form, for example having a flat platform forming a power transfer surface on or in proximity to which the or each secondary unit **200** can be placed. In one case, the electromagnetic field may be distributed over a power transfer area of the surface, as described in GB-A-2388716, the entire contents of which are incorporated herein by reference. It will be appreciated that this form of primary unit may allow one or more secondary units **200** to be simultaneously located in proximity to the primary unit to receive power therefrom. It may be appreciated that many other forms of primary unit **100** may allow one or more secondary units **200** to be simultaneously located in proximity to the primary unit to receive power therefrom. Another possible form for primary unit **100** is a shelf, on which the secondary unit **200** can be placed to receive power. Such a form can be advantageous for allowing parts of the secondary device to sit outside the magnetic field.

The secondary unit **200** in FIG. **1** is separable from the primary unit **100** and includes the secondary coil **202** which couples with the electromagnetic field generated by the primary unit **100** when the secondary unit **200** is in proximity to the primary unit **100**. In this way, power can be transferred inductively from the primary unit **100** to the secondary unit **200** without requiring direct electrically-conductive connections therebetween.

In order to transfer power inductively, the magnetic field/flux generated by the primary coil **108** should be time-varying. Accordingly, the primary unit **100** is configured to provide the primary coil **108** with time-varying electrical signals, such as alternating signals.

The primary coil **108** and the secondary coil **202** may have any suitable forms, but may for example be formed of copper wire wound around a high-permeability former, such as ferrite or amorphous metal. Litz wire is a particular type of wire which may be used in these circumstances. Litz wire has many strands of wire twisted together and can help reduce skin and proximity effects. The primary and secondary coils **108**, **202** may be different from one another, for example in size, number of turns, type of core, and physical layout etc. Multiple primary and secondary coils may be employed, and the number of primary and secondary coils may be different from one another.

It will be appreciated from FIG. **1** that the secondary unit **200** is shown as a portable device, being an object requiring power. For simplicity, the portable device is shown as being the same as the secondary unit **200**, however the secondary unit **200** may be a component (for example, removable) part of the portable device. Load **210** may therefore be considered to be the actual load of the secondary unit **200**, although it could be separate or separable from the secondary unit **200**. The primary unit **100** of system **1** is shown as being a charger, operable to charge the portable device **200** by electromagnetic induction. The primary unit may more broadly be considered to be a wireless power supply. That is, the charging of a battery (or other energy storage cell) is merely one example application of such primary units.

Accordingly, the secondary unit **200** may be considered to be only part of the device in FIG. **1**, for example only the secondary coil **202**, or the combination of the secondary coil **202**, capacitor **204**, rectifier **206** and DC/DC converter **208**. The secondary unit **200** may thus be connected to an external load (load **210**), and may be configured to supply inductively-received power to the external load. The secondary unit **200** may be carried in or by an object requiring power (secondary device), such as a portable electrical or electronic device or a rechargeable battery or cell. Further information regarding possible designs of secondary unit **200** and the objects (secondary devices) that can be powered by the secondary unit **200** can be found in GB-A-2388716 (referred to above). In GB-A-2388716, such secondary units may be referred to as secondary devices. The secondary unit **200** is merely shown as a portable device to improve an understanding of the present invention.

In the context of the present invention, secondary units (and/or secondary devices including such units) may be considered to be any electrical or electronic devices which require power, and may be portable such devices, for example (i.e. not exclusively) mobile phones, PDAs (Personal Digital Assistants), laptop computers, personal stereo equipment, MP3 players and the like, wireless headsets, vehicle charging

units, home appliances such as kitchen appliances, personal cards such as credit cards, and wireless tags useful for tracking merchandise.

Within the primary unit **100** of the system **1**, the DC/DC converter **102** is connected to receive an external DC input, and is operable to down-convert the received DC input to a lower DC voltage V_d. The DC/DC converter **102** may be a switch-mode Buck converter for high efficiency. The DC/DC converter **102** is connected to drive the inverter **104**, which generates an AC voltage at its output. The inverter **104** may be a MOSFET half-bridge, driven from a reference oscillator (not shown).

The AC voltage output by the inverter **104** is used to drive the primary inductive coil **108**. The capacitor **106** is connected in series with the primary coil, and the coil/capacitor combination is configured such that it is resonant at the operating frequency (the fundamental frequency) of the inverter **104**. The primary unit **100** may in some cases not have series resonant capacitor **106**. In order to reduce the harmonics present in the electrical drive signals driving the primary coil (i.e. the output of the inverter **104**), it may be desirable to provide an LC ballast circuit (not shown) between the inverter **104** and the primary coil **108**. The peak coil voltage in the primary coil **108**, V_{pc}, is typically much larger than the DC voltage V_d because the circuitry following the inverter (i.e. including primary coil **108** and capacitor **106**) is configured to be resonant.

The operating frequency may be considered constant or could be variable (i.e. tunable) for efficiency reasons. Indeed, the frequency could be tuned as a way of regulating the coil voltage (i.e. the magnitude of the electrical drive signals in the coil). For example, if the primary coil **108** is configured to be resonant, then it is possible to vary the magnitude of the drive signals by varying the frequency.

In the secondary unit **200** (portable device) of system **1**, the secondary coil **202** is connected to the input of the rectifier **206** in series with capacitor **204**, again such that the coil/capacitor combination is resonant. The secondary unit **200** may in some cases not have series resonant capacitor **204**. In use, the secondary coil **202** presents the rectifier **206** with an AC voltage received via electromagnetic induction from the primary coil **108**. The rectifier **206** rectifies this AC voltage to output a DC voltage to the DC/DC converter **208**. The DC/DC converter **208** down-converts the rectified voltage from the coil to match the input voltage required by the load **210**.

DC/DC converter **208** is, in some situations, preferably a switch-mode converter (similarly to converter **102**) rather than a linear converter. A switch-mode converter is typically able to convert from one DC voltage to another DC voltage far more efficiently than a linear converter. Furthermore, there is typically less variation in efficiency with input voltage for a switch-mode converter than for a linear converter. A linear converter generally drops any excess voltage across a resistance. Therefore, the larger the difference between the input and output voltages, the lower the efficiency. This variation in efficiency with input voltage can render the power drawn by the secondary unit **200** of the system **1** not independent of input voltage, which can be undesirable.

The DC/DC converter **208** of the secondary unit **200** is, optionally, configured to deliver a constant voltage to the load **122**. This constant voltage may be maintained by means of a feedback loop (not shown). For example, the output voltage of the DC/DC converter **208** may be used to control the duty cycle of the DC/DC converter **208** in order to maintain the required input voltage, V_{load}, of the load **210** irrespective of changes to the input voltage of the DC/DC converter **210**.

Over time, voltage requirements of the load for **210** may change, e.g. if the load **210** is a battery having a charging cycle. Such batteries may have constant-current and constant-voltage portions of such a charging cycle, and thus it will be appreciated that at different times focus may be placed on current rather than voltage. The DC/DC converter **208** may be configured to maintain the required load voltage V_{load} at different levels for the different parts of such a charging cycle. However, the required load voltage V_{load} typically changes on a relatively slow timescale (minutes), such that over a short period of time (seconds) it appears to be relatively constant. There may however be "transients" occurring on a fast timescale (milliseconds), generally infrequently. Movement of the secondary unit, or some particular capability of the secondary unit (e.g. if it has RF functionality, such as in a mobile telephone), may cause such transients.

The primary unit **100** of system **1** regulates the primary coil voltage V_{pc} at a predetermined voltage level. This is achieved by means of a feedback loop including the buffer (peak detector) **110** and the microprocessor unit **112**. As shown in FIG. **1**, the primary coil voltage is essentially buffered by buffer **110** and input to the microprocessor unit (MPU) **112**. Based upon the primary coil voltage, the microprocessor unit **112** may control the duty cycle of the DC/DC converter **102** in order to maintain the predetermined level of primary coil voltage V_{pc} irrespective of the load presented by the secondary unit **200** (and/or any other such presented load).

The primary unit **100** of the system **1** may be configured to determine the amount of power drawn via the primary coil **108**, or the amount of current passing through the primary coil **108**, in addition to or instead of measuring the primary coil voltage V_{pc}. That is, the regulation could be based on voltage, current or power measurements. For example, if power is considered, the primary unit **100** could be considered to measure both the voltage V_d and the current drawn from the DC/DC converter **102**, I_d. Measuring the voltage and current at this point has the advantage that the signals are DC. Within the microprocessor unit **112**, the signals concerned could be sampled using analogue-to-digital converters (ADCs) and low-pass filtered to reduce noise. Averaging may be used as part of this filtering. The values of the voltage V_d and the current I_d could then be, for example, determined within the microprocessor unit **116** and multiplied together to determine the power drawn.

The following description details a number of example embodiments of the present invention. It will be appreciated that other embodiments are possible within the scope of the appended claims. In embodiments detailed herein, like elements are denoted with like reference numerals, and duplicate description is therefore omitted. It will therefore be understood, for example, that features of system **1** and related description may apply to embodiments of the present invention by analogy.

FIG. **2** is a schematic diagram of a system **300** according to one embodiment of the present invention. System **300** includes a primary unit **302** and a plurality of secondary units **200**. System **300** may therefore be useful for supplying power inductively to two or more secondary units **200** simultaneously (or one after the other, for example without having to swap one device for the other).

It will be appreciated that FIG. **2** is presented at a circuitry level, and in this regard embodiments of the present invention focus on circuitry features. However, as well as relating to circuitry, the present invention extends to the primary unit itself (which may include features beyond the circuitry features shown, for example its physical structure) and to the overall power transfer system including such a primary unit.

In FIG. **2**, the secondary units **200** are shown as each including a secondary coil **202** but as representative of corresponding circuitry devices. This demonstrates that secondary units **200** may be only components of such secondary devices, and also enables a simplification of the schematic diagram. Thus, in one embodiment of the present invention, secondary units **200** may be the same as that in FIG. **1**. In another embodiment of the present invention, secondary units **200** in FIG. **2** (and in other Figures) may be different from that in FIG. **1**, and may be different from one another.

Primary unit **302** differs from primary unit **100** in FIG. **1**, in that it includes a plurality of primary coils **108**. Primary coils **108** are connected together in parallel. Although three such primary coils are shown in FIG. **2**, it will be appreciated that two or more such coils could be provided and that the number of coils could be large, for example up to 10 or up to 50, or more.

In the FIG. **2** embodiment, two of the primary coils **108** are shown as having a secondary unit **200** in proximity thereto, and the third primary coil **108** is shown as having no secondary unit **200** in proximity thereto. This is only by way of example, and it will be appreciated that any number of the primary coils **108** (or none of them) may have one or more secondary units **200** in proximity thereto, depending on the configuration of the primary coils **108** and the number of secondary units **200** requiring power. A primary coil (depending on its configuration) may simultaneously transfer power to more than one secondary unit. Similarly, a secondary unit may receive power simultaneously from more than one primary coil in the same primary unit.

The FIG. **2** embodiment is advantageous for the following reasons, at least. Compared to the example system in FIG. **1**, the primary unit **302** is provided with the capability of transferring power via a plurality of primary coils **108** without requiring a large replication in circuitry. In particular, in primary unit **302** the extra capability (as compared to the FIG. **1** system) is provided by adding extra primary coils **108** in parallel. In this way, minimum additional cost and complexity is incurred.

In general, embodiments providing the extra capability with low replication in the circuitry may require higher-rated (higher-power capability) components than embodiments in which lower-rated parts are replicated. In general, it may be less cost intensive to employ higher-rated components than to increase component count.

Further, the voltage over each of the primary coils **108** can be regulated without needing to provide additional circuitry, because the primary coil voltage V_{pc} is the same for all of the parallel-connected primary coils **108**. Thus, it is the peak voltage across the parallel combination that is sensed and fed back via the microprocessor unit **112**, and accordingly the control system is arranged such that it maintains all of the primary coils **108** at the same, regulated, voltage level. The FIG. **2** system is configured to operate when there are loads (secondary units/devices) in proximity to all of the primary coils **108** or only in proximity to some of the primary coils **108**. The FIG. **2** system is able to operate when there are different loads on different primary coils **108**. The regulation based on sensing the primary coil voltage V_{pc} at a single point is satisfactory since the primary coils **108** are mutually parallel. The series capacitor **106** is provided in common to all of the primary coils **108**. Thus, the primary coils **108** are configured to be resonant at an intended frequency (i.e. tuned). The intended frequency may be the frequency at which the inverter **104** generates its alternating current (i.e. at the fundamental frequency of the alternating current).

FIG. **3** is a schematic diagram of a primary unit **306** according to one embodiment of the present invention. Primary unit **306** may, for example, be used interchangeably with primary unit **302** in the FIG. **2** embodiment.

Primary unit **306** differs from primary unit **302**, in that a ballast circuit **308** is provided. In addition, it is more clearly apparent from FIG. **3** that any number of primary coils **108** may be provided in parallel with one another.

Ballast circuit **308** is provided between the inverter **104**, and the capacitor **106** and coil **108** combination. Ballast circuit **308** includes an inductor **310** and capacitor **312**. Accordingly, ballast circuit **308** may be referred to as an LC ballast circuit. Inductor **308** is connected in series between the inverter **104** and the capacitor **106**. Capacitor **312** is connected in parallel with the capacitor **106** and coil **108** combination.

In the present embodiment, the ballast circuit **308** is advantageous as it acts as a low-pass filter and reduces the magnitude of harmonics present in signals on the primary coils **108**. This may help to reduce or avoid the generation by the primary unit **306** of unwanted radio-frequency interference and electromagnetic interference.

The presence of the ballast circuit **308** in the primary unit **306** can also be advantageous from the point of view of stability of operation of the primary unit and in terms of regulating operation of the primary unit. This can be true both when the primary unit has a single primary coil **108** and when the primary unit has a plurality of primary coils. Such a ballast circuit may be configured advantageously to improve system stability by appropriate selection of component values. Advantages relating to the ballast circuit **308** will now be considered further.

FIG. **4** presents a set of schematic diagrams useful for understanding the benefit of a ballast circuit in a primary unit of an inductive power transfer system.

FIG. **4**A is a schematic diagram representative of parts of the system of FIG. **2**. It is assumed that the primary side is supplied with a fixed alternating current such that the primary coil **108** generates an electromagnetic field to transfer power inductively to the secondary side. It is also assumed that characteristics of the secondary side are unknown, for example the load in the secondary unit, the number of secondary units present, etc. It is also assumed that no regulation of the signals in the primary coil **108** is provided. Importantly, no ballast circuit is present in the FIG. **4**A circuitry.

FIG. **4**B is a schematic representation of the frequency response of the circuitry in the primary side of FIG. **4**A. The solid curve indicates that the FIG. **4**A circuitry may have a resonant response with a single main peak. The curves shown with dashed lines are to represent ways in which the resonant response could change with the changing secondary side (e.g. changing load, number of secondary units, etc). As shown, the slope of the curve could change either side of the resonant peak or the peak frequency could change, or indeed a combination of those changes could occur.

It will be appreciated that if the signals in the primary side are at a particular frequency (e.g. as indicated by the vertical dashed line in FIG. **4**B), then the changing frequency response adds a significant burden in the primary side if it is desired to regulate, for example, the voltage over the primary coil. This problem is present with a single primary coil **108** as in FIG. **4**A, and is exacerbated with multiple mutually-parallel primary coils **108** as in FIG. **2**.

FIG. **4**C is a schematic diagram representative of parts of the system of FIG. **3**. Again, it is assumed that the primary side is supplied with a fixed alternating current such that the primary coil **108** generates an electromagnetic field to trans-

fer power inductively to the secondary side. It is also assumed that characteristics of the secondary side are unknown, for example the load in the secondary unit, the number of secondary units present, etc. It is also assumed that no regulation of the signals in the primary coil **108** is provided. However, in this case, ballast circuit **308** is present in the circuitry.

FIG. **4**D is a schematic representation of the frequency response of the circuitry in the primary side of FIG. **4**C. The solid curve indicates that the FIG. **4**C circuitry may be configured to have a resonant response with two main peaks, joined by a relatively flat portion. The curve shown with a dashed line is to represent a way in which the resonant response could change with the changing secondary side (e.g. changing load, number of secondary units, etc). As shown, although the form of the peaks may vary, and although the slopes on either side of the peaks may vary, the substantially flat central portion (marked with the box labelled "X" in FIG. **4**D) experiences little, if any, change.

Thus, if the signals in the primary side are at a particular fundamental frequency chosen to be comfortably within box X, i.e. in the relatively stable central portion, then the changing frequency response with changing secondary side adds little or no substantial burden in the primary side if it is desired to regulate, for example, the voltage over the primary coil. Effectively, the primary side is desensitized to changes on the secondary side. This benefit, over the FIG. **4**A circuitry, is provided on a single primary coil **108** as present, and possibly more so if a plurality of primary coils are present. Thus, the FIG. **3** circuitry is considered to embody the present invention even when only one primary coil **108** is provided.

FIG. **5** is a schematic diagram akin to that in FIG. **4**C, i.e. of a system according to one embodiment of the present invention in which the primary side has a ballast circuit. The schematic diagram has been used to simulate operation of the system, to demonstrate the benefits of the ballast circuitry.

To ease understanding of the circuitry in FIG. **5**, the relevant elements have been denoted with the same reference numerals as corresponding elements in FIGS. **1** to **4**. Briefly, the primary-side circuitry is driven by inverter **104**, and includes inductor **310** (ballast, L_{bal}) and capacitor **312** (tank, C_{tank}) whose values are chosen such that it is tuned to frequency $f_0=1/(2\pi\sqrt{LC})$. The circuitry further includes the primary coil **108** (pad inductor, L_{pad} or L_p) and capacitor **106** (series resonant cap, C_p), which are also tuned to f_0. Frequency f_0 is chosen as the switching frequency of the inverter **104** for the present simulations, which frequency is typically in the range 100-500 kHz for wireless power transfer applications. For consistency with the FIG. **3** embodiment, primary core **108** (pad inductor, L_{pad}) may be a single primary coil **108** or a plurality of mutually-parallel (or even series-connected) coils. The additional labels in FIG. **5** are designators for the simulations.

For the simulation, the inductor **310** (ballast) and capacitor **312** (tank) are driven by a constant AC voltage (provided from inverter **104**) and can effectively act as a constant current source or be used to provide a constant coil voltage. This is effectively independent of small component tolerances, since (as mentioned above) operation is carried out in the flat region of the frequency-response curve, between the two main resonant peaks.

FIG. **6** is a graph of simulation results based on the FIG. **5** circuitry. In particular, FIG. **6** is a frequency response curve obtained using the parameter values set out below it. The labelling of the parameters corresponds to the labelling in FIG. **5**. The frequency of operation was chosen to be 323 kHz (0.323 MHz).

As can be seen, from the solid-line curve in FIG. **6**, the frequency response was found to be much as shown in FIG. **4**D, i.e. with two main resonant peaks with a substantially flat portion therebetween. The frequency of operation, 323 kHz, was chosen to be in the centre of the curve between the two main peaks, where the curve is substantially flat. The solid-line curve shows the response when no secondary unit is present, and the dashed-line curve shows the response when the secondary-side is present and operating at full power. As can be seen, the operating point in the curve (in the flat portion) does not noticeably change between these two situations.

In one embodiment of the present invention, it is advantageous to keep each pair of components, i.e. the inductor **310** and capacitor **312** as one pair and the capacitor **106** and primary coil **108** as another pair, tuned to the same frequency f_0 (by suitable selection of their inductance and capacitance values), as this maintains the same basic resonant curve shapes. Within this constraint, increasing the ratio ("the inductor ratio") of the inductance of the ballast inductor **308** to the inductance of the primary core **108** (i.e. L_{bal}/L_{pad}) moves the resonant peaks further apart in frequency, and lowering the inductance of the ballast inductor **308** increases the current in the primary coil (the pad current). The following equations are useful in understanding these relationships.

The resonant peaks are located as follows:

$$\frac{\omega_{peak}}{\omega_0} = \sqrt{\frac{\beta + \sqrt{\beta^2 - 4}}{2}}, \sqrt{\frac{\beta - \sqrt{\beta^2 - 4}}{2}}$$

$$\beta = \frac{Lbal}{Lpad} + 2$$

where ω_{peak} is the peak angular frequency (in radians), ω_0 is the operating angular frequency (in radians), i.e. the centre-frequency of the response curve, L_{bal} is the inductance of ballast inductor **310** and L_{pad} is the inductance of the primary coil **108**.

The current in the primary coil **108** is approximately given by:

$$Ipad = \frac{Vinp}{\omega_0 \cdot Lbal}$$

where V_{inp} is the peak magnitude of the input alternating voltage as shown in FIG. **5**.

The peak voltage over the primary coil is approximately given by:

$$Vpad = Vinp \cdot \frac{Lpad}{Lbal}$$

V_{inp} is the magnitude of the fundamental frequency (sinusoidal component at f_0) generated by inverter **104**. This may be considered to be equal to the inverter rail voltage multiplied by $2/\pi$.

FIG. **7** is a graph of simulation results showing the effect of the inductor ratio on the separation between the resonant peaks. The y-axis represents the separation between the peaks in frequency, divided by the centre frequency. The centre frequency is at the centre of the x-axis in FIG. **6**. FIG. **8** is a graph of simulation results showing the effect of the induc-

tance value of the ballast inductor **310** on the current (the primary current) in the primary coil **108**.

Based on the above, an example design process for designing circuitry as in FIG. **5** might be, in one embodiment of the present invention, as follows:

Step 1: select the inductance value L_{bal} of the ballast inductor **310** and the capacitance value C_{tank} of the tank capacitance **312** so that the pair is tuned to frequency $f_0=1/(2\pi\sqrt{LC})$. Also, select the inductance value L_{pad} of the primary coil **108** and the capacitance value C_p of the series resonant capacitor **106** so that the pair is tuned to frequency f_0. Then, select frequency f_0 as the switching frequency of the inverter **104**.

Step 2: select a value for the inductor ratio L_{bal}/L_{pad} so that the resonant peaks are sufficiently far apart that the effect of component tolerances is substantially small. It is found that $L_{bal}/L_{pad}=1/4$ approximately is a reasonable starting point.

Step 3: the expected voltage over the primary coil(s) **108** is thus approximately:

$$Vpad = Vinp \cdot \frac{Lpad}{Lbal}$$

The number of turns in the primary coil may be selected to work with practical inverter voltages, primary-coil voltages and primary-coil currents. Selection of inverter and coil voltages is typically affected by available FETs, efficiency requirements, cost and EMC (electromagnetic compatability) considerations. Design trade-offs may mean that the ratio selected in step 2 is adjusted accordingly.

Step 4: if appropriate, carry out fine-tuning of the overall design. For example, the resonant frequency of the ballast inductor **310** and tank capacitor **312** pair may be adjusted slightly to allow zero-voltage switching to be used by the inverter FETs under all tolerance conditions. The use of zero-voltage switching (ZVS) leads to low switching noise and reduced losses.

The above steps may need to be carried out somewhat together in practice, or partly iteratively. In practical implementations, there may be restrictions on the component values so that there may not be complete freedom of choice of component value.

Looking back over FIGS. **4** to **8**, it may be appreciated that the primary coil has a self-inductance, L_{pad} or L_p, which is the reactance of the coil in isolation (neglecting parasitics such as inter-winding capacitance). However, when this coil couples to a secondary coil in a secondary unit, the effective inductance may appear different and may be modified depending on the inductance of the secondary coil, L_s, the degree of coupling between the two coils and the impedance of the load imposed by the secondary unit. Thus the effective inductance seen may be different to the measured inductance in isolation. The effective inductance may vary depending on how strong the coupling is and may therefore be dependent on how closely aligned the primary and secondary coils are. It may also depend on the secondary load and may therefore vary over time. It is this effective inductance which generally determines the resonant frequency of the system. Thus, as in FIG. **4**B, it may be that the frequency of operation is sometimes, or even often or always, different from the resonant frequency at that time, such that the system runs generally slightly "off resonance". A benefit of the circuitry in FIG. **4**D may thus be that the system is deliberately run at a frequency between the two resonant peaks, i.e. it is designed to run off resonance. The system may thus be considered somewhat immune or desensitised to changes in the effective inductance seen (i.e. substantially stable).

FIG. **9** is a schematic diagram of a system **350** according to one embodiment of the present invention. System **350**, similarly to system **300**, includes a primary unit **352** and a plurality of secondary units **200**.

Primary unit **352** is generally the same as primary unit **306**, except that only two primary coils **108** are shown, and except that a specific example implementation of primary coil **108** is shown. Each primary coil **108** in primary unit **352** includes a bar-shaped piece of ferrite acting as a primary core **109** with turns of the corresponding primary coil **108** wound around it and distributed along its length. The secondary coils **302** in the secondary units **200** of system **350** also have a similar configuration. That is, the secondary coil **202** in each secondary unit **200** of FIG. **9** includes a bar-shaped piece of ferrite acting as a secondary core **203** with turns of the corresponding secondary coil **202** wound around it and distributed along its length.

In the present embodiment, the secondary coils **202** (and cores **203**) are of slightly smaller dimensions than the primary coils **108** (and cores **109**), giving some freedom of placement in the positioning of the device. In another embodiment of the present invention, the primary coils **108** could be the same size as (or slightly smaller than) the secondary coils.

In the present embodiment, the primary coils **108** are physically arranged such that they share a common coil axis, however they are arranged so that adjacent such primary coils have opposite polarities to each other. This is exemplified in FIG. **9** by the coil ends of the two shown primary coils **108** that are adjacent to one another being connected together in common and similarly the furthest-apart ends being connected together in common. An advantage of this layout is that the far-field electromagnetic field generated by the primary coils **108** may be cancelled to some extent, which can reduce interference caused by the primary unit **352**. In this fashion, a larger number of primary coils **108** can be provided in a line with alternate polarities. In another embodiment of the present invention, the primary coils **108** could be arranged in a different manner, for example side-by-side. In other embodiments the primary coils may all have the same polarity, or the opposing polarities may be provided from separate out-of-phase driving systems.

The arrangement of the primary coils **108** in the present embodiment lends itself to the shelf format of the primary unit mentioned above. The line of primary coils **108** could sit under the shelf, rendering the shelf itself as a power transfer surface. Secondary units **200** could then be arranged on the shelf to receive power inductively therefrom.

FIG. **10** is a schematic diagram of a primary unit **362** according to one embodiment of the present invention. As mentioned before, the number of primary coils **108** provided in primary units presented herein may vary from embodiment to embodiment. With this in mind, primary unit **362** may, for example, be used interchangeably with primary units **302**, **306** and **352**.

Primary unit **362** differs from primary unit **306**, as follows. Firstly, the circuitry portion including ballast circuit **308**, capacitor **106** and one of the primary coils **108** is repeated per primary coil **108**, and those portions are connected together in parallel. Secondly, the buffer **110** (peak detector) is only connected to one of the primary coils **108**.

Accordingly, in primary unit **362**, the ballast circuits are all connected to the inverter **104**, such that inverter **104** drives them all simultaneously. This configuration of the primary unit **362** takes advantage of the benefits of the ballast circuit **308** discussed in detail above. That is, the inverter **104** is

configured such that its fundamental output frequency is in the substantially flat portion of the frequency response curve for each of the parallel-connected portions. By configuring the parallel-connected portions such that they are mutually-similar to one another, it can be arranged that the substantially flat portion of the frequency response curve for each of the parallel-connected portions lies in approximately the same place in frequency. Therefore, the overall combination of the parallel-connected portions (and each such portion individually) is desensitized to changes on the secondary side (e.g. to the presence/absence of secondary unit **200**, or the type of secondary unit **200**). This is one reason why it is possible to regulate the voltage over each of the primary coils **108** whilst only sensing that voltage for one of those coils **108** (in this case, the uppermost coil **108**). That is, by regulating operation of one of the primary coils **108**, the operation of all of the primary coils **108** is regulated. It is advantageous, cost-wise and complexity-wise, to not need separate regulation circuitry per primary coil **108** (e.g. requiring a separate buffer **110** per coil **108** and a more complex MPU **112**).

FIG. **11** is a schematic diagram of a primary unit **372** according to one embodiment of the present invention. Primary unit **372** may, for example, be used interchangeably with primary units **302**, **306**, **352**, and **362**.

Primary unit **372** is generally the same as primary unit **362** except that each primary coil **108** is provided with a feedback path via a buffer **110** (peak detector). Further, an MPU **374** with multiple inputs is provided instead of MPU **112**.

Primary unit **372** is operable to sense the voltage over each of the primary coils **108** and to regulate its operation, in this case by controlling operation of DC/DC converter **102**, in dependence upon any one or more of those sensed voltages. In certain circumstances, for example when only one secondary unit **200** is present, it can be advantageous to control regulation based upon the sensed voltage from a particular primary coil **108**, for accuracy of control of that particular coil. In other circumstances, it may be advantageous to base regulation on the voltages over a different coil **108** at different times. Overall, a high capability in control is afforded in primary unit **372**.

FIGS. **12** to **15** present schematic diagrams of primary units **382**, **392**, **402** and **412**, respectively, each forming a different embodiment of the present invention. Each of these primary units may, for example, may be used interchangeably with any of the primary units **302**, **306**, **352**, **362** and **372**.

Each of the primary units **382**, **392**, **402** and **412** is generally the same as primary unit **302**, except for the following differences. It will be appreciated that these embodiments are intended to demonstrate that the feedback signal (sensing operation of the circuitry) may be obtained at any of several different points in the primary-unit circuitry.

In primary unit **382** of FIG. **12**, an AC voltage sense is provided as in primary unit **302** but from between the capacitor **106** and the inverter **104**. In the primary unit **392** of FIG. **13**, an AC current sensor **394** is provided at the primary coils (represented as a current transformer). In primary unit **402** of FIG. **14**, a DC voltage sense is provided between the DC/DC converter **102** and the inverter **104**. In primary unit **412** of FIG. **15**, a DC current sense (formed by a series resistor **414** and an operational amplifier **416**) is provided between the DC/DC converter **102** and the inverter **104**.

FIG. **16** is a schematic diagram of a primary unit **422** according to one embodiment of the present invention. Primary unit **422** may, for example, be used interchangeably with any of primary units **302**, **306**, **352**, **362**, **372**, **382**, **392**, **402** and **412**.

Primary unit **422** is generally similar to primary unit **372**, except that the parallel portions do not have ballast circuits (but another embodiment could include such ballast circuits), and that the capacitors **106** in each parallel portion are replaced with variable reactances (variable capacitors) **424**. Further, primary unit **422** has an MPU **426** (instead of MPU **112**) which has an input per voltage sense (via buffers **110**) and an output per variable reactance **424** so as to control the value of those reactances.

Accordingly, in primary unit **422**, each parallel portion has a primary coil **108** and variable reactance **424** connected together in series. Each variable reactance **424** is implemented in this embodiment as a variable capacitor, formed by an array of capacitors which may be switched in or out under control of the MPU **426**. The variable capacitors may be fabricated using MOSFETs or MEMs by way of example. The value of the variable capacitors is controllable by the MPU **426**.

As the capacitance value in the variable reactances **424** is varied, the LC combination (of the primary coil **108** and variable reactance **424**) is tuned such that the combination may be brought in or out of resonance. In this way, the peak coil voltage concerned may be controllably varied, based upon tuning the resonant frequency of the LC combination towards or away from the fundamental frequency of the inverter **104**.

Thus, in primary unit **422**, the peak voltage in each primary coil **108** is sensed, and these feedback signals may be used by MPU **426** to control both the DC/DC converter **102** and the variable reactances **424**. Each primary coil **108** may be regulated at a different voltage level. It will be understood that although embodiments disclosed herein focus on voltage sensing and regulation, other embodiments of the present invention may regulate current or power in the primary coils **108**.

In primary unit **422**, it is not essential for each of the primary coils **108** to have a variable reactance **424**. For example, one of the primary coils **108** could have a fixed capacitor, such as capacitor **106**, and the others could have variable reactances. The primary coils **108** could be regulated together by controlling the DC/DC converter **102**, and the primary coils **108** could be regulated relative to one another (and the coil **108** with the fixed capacitor **106**) by controlling the variable reactances **424**. More generally, a variable impedance could be employed (incorporating a resistance), however the losses associated with the resistances (manifested as heat dissipation) may be undesirable in some embodiments.

FIG. **17** is a schematic diagram of a primary unit **432** according to one embodiment of the present invention. As before, primary unit **432** may be used interchangeably with previously-described primary units embodying the present invention.

Primary unit **432** is the same as primary unit **422**, except that instead of the parallel portions being driven by common inverter **104**, each such portion is driven by a half-bridge **434**, with the half-bridges **434** being driven by a common driver **436** and oscillator **438**.

Focusing on the LC combination in primary units **422** and **432**, it will be appreciated that there are several ways of forming the variable capacitor (e.g. using varactors or various series and parallel combinations of capacitor). Alternatively, a fixed capacitor in series with a variable inductance could be used, since varying L or C will vary the overall LC combination. This could be realised with a switched array of individual conductors, or, for instance, by providing a coil wound

around a ferrite rod, with taps in the coil, such that different sets of turns can be shorted or selected to alter the overall inductance.

FIG. **18** is a schematic diagram of a primary unit **442** according to one embodiment of the present invention. As before, primary unit **442** may be used interchangeably with previously-described primary units embodying the present invention.

Primary unit **442** is closely similar to primary unit **432**, except that each parallel portion is provided with its own inverter **104** instead of the half-bridges **434** (and driver **436** and oscillator **438**). Further, each of the variable reactances **424** is replaced with a fixed capacitor **106**.

In order to provide controllability of each parallel portion, akin to that in FIG. **17**, each inverter is provided with its own tunable oscillator **444** controllable by the MPU **426**. Thus, the driving frequency (i.e. the fundamental output frequency of the inverter **104** concerned) provided to each primary coil **108** can be adjusted to bring it towards or away from resonance, thereby adjusting the AC voltage (peak voltage or, for example RMS voltage) across it. As in FIG. **17**, the signal on each primary coil is sensed via a buffer (peak detector) **110**, and the MPU **426** is operable to dynamically control the signals on its outputs to perform system control/regulation. Thus, the MPU **426** may selectively control operation of the DC/DC converter **102** and/or the operation of one or more of the tunable oscillators **444**. The MPU **426** is operable to dynamically regulate the voltage (or current or power, in other embodiments) in each of the primary coils **108**, either all to the same level or to different levels, as desired.

As before, it is not necessary for each of the inverters **104** to be provided with its own tunable oscillator **444**. For example, one of the inverters **104** could be provided with a fixed-frequency oscillator, and the others could have tunable oscillators **444**. The primary coils **108** could be regulated together by controlling the DC/DC converter **102**, and the primary coils **108** could be regulated relative to one another (and to the coil **108** with the fixed-frequency oscillator) by controlling the tunable oscillators **444**.

FIGS. **19** and **20** are schematic diagrams of possible primary coil **108** layouts on the charging surfaces of primary units according to some embodiments of the present invention. In such embodiments, it is intended that a secondary unit **200** could be placed anywhere, or substantially anywhere, on such charging surfaces of primary units to be charged. In such cases, the primary unit concerned may include a plurality of primary coils.

In FIG. **19**, the charging surface has an array of wound ferrite coils **450**, i.e. an array of wound coils **450** on a ferrite back-plate **452**. In FIG. **20**, the charging surface has an array of printed hexagonal spiral coils **460** etched on to a PCB (printed circuit board) **462**, which may have a ferrite and/or metal shield underneath. In FIG. **20**, each hexagonal arrangement **460** may be considered to be an individual coil. Rectangles **464** represent the possible footprints of a secondary unit **200**, or a secondary device incorporating such a secondary unit, placed on the charging surface of the primary unit concerned to be charged (i.e. to receive power inductively therefrom).

It will be appreciated that in some embodiments the footprint of the secondary unit **200** may be smaller than the charging area on the charging surface, such that multiple secondary units may be charged at the same time. In arrays such as those shown in FIGS. **19** and **20**, it may be possible to switch primary coils **108** in and out, so that only certain coils are active at a particular time. When one primary coil **108** is switched out, it may be desirable to switch in an inductor (a dummy coil) instead, to retain the same overall inductance and keep the system on resonance. This concept could be applied by analogy to any of the previously described embodiments to form new embodiments of the present invention, and this concept is explored in more detail later herein. This concept may also be advantageous even if only a single secondary unit is receiving power, as different primary coils and even different numbers of primary coils may need to be active depending on the position and/or orientation of the secondary unit with respect to the charging surface. Therefore, depending on such position/orientation, different dummy coils or different numbers of dummy coils may need to be active at different times to maintain system resonance.

The "dummy coils" may be standard inductors, which may be smaller and lighter than primary coils. Further, they may be shielded or designed not to radiate so as not to affect the electromagnetic field generated by the primary coils. The dummy coils may be located in the primary unit away from the power transfer area so as to minimise any effect from them (heat, radiation, or otherwise). Thus, it may be possible to maintain the inductance seen from the driving circuitry using dummy coils, without those dummy coils affecting the electromagnetic field generated.

FIG. **21** is a schematic diagram of a primary unit **472** according to one embodiment of the present invention. As before, primary unit **472** may be used interchangeably with any of the previously-described primary units embodying the present invention.

As mentioned above, the "dummy coil" concept could be applied to any of the previously-described embodiments, and primary unit **472** is one example of this concept as applied to primary unit **306** of FIG. **3**.

As can be seen from FIG. **21**, each of the primary coils **108** is provided in series with a switch **474**, so that it may be switched (for example under control of the MPU **112**) in or out. In parallel with the primary coils **108** (and switches **474**) there are provided corresponding inductors **476** (acting as dummy coils) connected in series with switches **478**. Thus, as one primary coil **108** is switched out, an inductor (dummy coil) **476** may be switched in, in order to maintain the same overall inductance of the parallel arrangement of primary coils **108** and inductors **476**.

The above explanation assumes a 1:1 relationship between the inductance of the primary coils **108** and the inductors (dummy coils) **476**, such that one can be connected in to replace the other in the circuitry. A further assumption when considering primary unit **472** is that the same number of primary coils **108** and inductors (dummy coils) **476** are provided. Although this is true of one embodiment of the present invention, it is not true for other embodiments. For example, in one embodiment of the present invention it may be known that at any one time only up to a particular number of primary coils **108** will be switched out. In that case, it may be possible to only provide that particular number of inductors **476** (which number may be smaller than the number of primary coils **108**). Also, for example, in another embodiment of the present invention it may be known that when primary coils **108** are switched out there will always be at least a particular number of them switched out. In that case, it may be possible to configure one of the inductors (dummy coils) **476** such that it has the same inductance as that particular number of primary coils **108** (which number may be greater than 1). It will be appreciated that other arrangements of primary coils **108** and inductors (dummy coils) **476** are possible, forming further embodiments of the present invention.

FIG. **22** is a schematic diagram of a primary unit **482** representing a number of embodiments of the present invention.

Primary unit **482** is intended to generically demonstrate how the concept of switching in and out primary coils **108** and inductors (dummy coils) **476** can be applied to embodiments of the present invention. Primary unit **482** includes an array of primary coils **108** and inductors **476**, a driver **484** and a switch unit **486**. The primary coils **108** and inductors **476** are commonly connected at one end via the switch unit **486** to a ground terminal in the driver **484**. The other end of each of the primary coils **108** and inductors **476** is selectively connectable under control of the switch unit **486** to either output **1** or output **2** of the driver **484**. As will become apparent, the driver **484** could have any number of outputs, and only two are shown for convenience.

The configuration of primary unit **482** is generally applicable to primary-unit embodiments disclosed herein. For example, the primary coils **108** could be the array in FIG. **19** or **20**. Also, for example, considering driver **484** with only one output (or with other outputs unconnected), the primary coils **108** and inductors **476** could be those in FIG. **21**, the switch unit **486** could be the combination of switches of **474** and **478** in FIG. **21**, and the driver **484** could be the remaining parts of the circuitry in FIG. **21**, with the driver output being between the capacitor **106** and buffer **110** in FIG. **21**.

The benefit of providing more than one output in the driver **484** is that the primary coils **108** and inductors **476** can be controlled in sets, one set per output, such that (for example) one set could be regulated at a different voltage to another. As exemplified in FIG. **22**, any number of the primary coils **108** and inductors **476** could be connected to any of the driver outputs.

FIG. **23** is a schematic diagram of a driver **492** which may be interchanged with driver **484** to form an embodiment of the present invention. It will be appreciated that driver **492** is the same as primary unit **492** of FIG. **23**, except that the primary coils **108** have been removed leaving outputs **1** and **2**, and that the remaining lower outputs of the half-bridges **434** are connected together in common for compatibility with the common ground in FIG. **22**. Accordingly, it is understood that one set of primary coils **108** (or inductors **476**) may be regulated at one voltage (via output **1**), and another set of primary coils **108** (or inductors **476**) may be regulated at another voltage (via output **2**). Again, as before, regulation could be voltage, current or power regulation.

Having different primary coils **108** regulated to different primary-coil voltages can be useful for supplying different levels of power to different loads (e.g. different types of secondary unit **200** or secondary device) which are on the same charging surface, or, at least, receiving power inductively from the same primary unit. This can also be useful because the coupling between primary unit and secondary unit can vary widely depending on the position and/or orientation of the secondary unit relative to the primary unit. Moreover, tolerances in practical capacitors and inductors can result in differences from one secondary unit or device to the next.

This variation in coupling can result in secondary units/devices having to cope with a large voltage input range, and it is generally desirable to restrict the voltage range that a secondary unit/device has to cope with such that it may include lower voltage-rated components, thereby reducing cost and improving efficiency. With this in mind, in one embodiment of the present invention, the primary and secondary units could be configured to communicate with one another. For example, a secondary device in one embodiment of the present invention could be configured to communicate to the primary unit information indicative of its power of requirement. In response, the primary unit could be configured to regulate the relevant primary coils accordingly. It will be recognised that in some embodiments such communication may only need to be one-way communication, for example from secondary unit to primary unit, although more robust communication may take advantage of two-way communication.

FIG. **24** is a schematic diagram of a primary unit **502** according to one embodiment of the present invention. Primary unit **502** is an example implementation of primary unit **582**, in which banks of primary coils **108** and inductors (dummy coils) **476** are shown separately (as in FIG. **21**) and in which an example implementation of switch unit **486** is explicitly shown. Further, it is shown that control of the switch unit **486** could be handled by an MPU **504**, which may be part of or separate from the MPUs shown in the other embodiments of the present invention disclosed herein.

In one embodiment of the present invention, akin to that in FIG. **18**, it may be advantageous to controllably vary the driving frequency on the primary unit. This may be useful, for example, if secondary units do not include DC/DC converters and instead communicate feedback information to the primary unit. For example, in one embodiment a primary unit could potentially drive a primary coil or coils for one secondary unit at one frequency and a different primary coil or coils for a different secondary unit at a different frequency in dependence upon feedback signals from those secondary units. In this regard at least, some embodiments may obtain feedback signals from the secondary side (as well as, or instead as, feedback signals from the primary side).

It will be appreciated that other embodiments of the present invention are possible within the scope of the appended claims.

The invention claimed is:

1. Circuitry for use in a primary unit of an inductive power transfer system to generate an electromagnetic field so as to transfer power wirelessly by electromagnetic induction to one or more secondary units of the system, the or each secondary unit being separable from the primary unit, the circuitry comprising:

a plurality of drivable portions, at least one of said plurality of drivable portions comprising a primary coil and at least one of said plurality of drivable portions comprising a dummy coil;

driving circuit operable to supply both or at least two of said portions with drive signals so as to cause those driven portions that have a said primary coil to generate said electromagnetic field; and

control circuit operable, in dependence upon a feedback signal indicative of a characteristic of the primary coil or dummy coil of one or more of the driven portions, to control the circuitry so as to tend to regulate said feedback signal,

wherein the circuitry is configured so that:

those portions that are driven are connected together in parallel and have a tuned resonant response; and

said control tends to regulate a characteristic of each of said driven coils.

2. Circuitry as claimed in claim **1**, wherein the characteristic of a said coil is a magnitude of a coil signal over that coil.

3. Circuitry as claimed in claim **1**, wherein each said drivable portion comprises substantially only its said primary coil or dummy coil.

4. Circuitry as claimed in claim 3, configured such that said feedback signal is indicative of a magnitude of a voltage signal commonly over the coils of the driven portions.

5. Circuitry as claimed in claim 3, comprising a capacitance configured to be commonly connected in series with those portions that are driven.

6. Circuitry as claimed in claim 5, configured such that, during a driving period:

the drive signals have a particular fundamental frequency;

the capacitance has a particular capacitance value; and

the portions that are driven have a combined particular inductance value.

7. Circuitry as claimed in claim 6, configured such that, during the driving period, the portions that are driven always have substantially the combined particular inductance value.

8. Circuitry as claimed in claim 6, configured such that those portions that are driven during one interval of the driving period are not the same portions that are driven during another such interval of the driving period.

9. Circuitry as claimed in claim 6, wherein the particular capacitance value is such that the portions that are driven are resonant at the particular fundamental frequency.

10. Circuitry as claimed claim 6, wherein the capacitance has a fixed capacitance value and wherein the drive signals have a fixed fundamental frequency.

11. Circuitry as claimed in claim 6, wherein:

the circuitry is configured such that the number of portions driven during one interval of the driving period is the same as the number of portions driven during another interval of the driving period.

12. Circuitry as claimed in claim 3, wherein:

the circuitry is configured such that those portions that are driven have in common a frequency response having two main resonant peaks and a substantially flat portion there between; and

the drive signals have a fundamental frequency positioned in frequency between said main resonant peaks and in said flat portion.

13. Circuitry as claimed in claim 12, wherein:

those portions that are driven are configured such that they are connected in common with a series capacitance and a ballast circuit; and

the series capacitance and ballast circuit are configured such that those portions that are driven have in common such a frequency response.

14. Circuitry as claimed in claim 1, wherein:

each said drivable portion is configured such that, when driven, it has a frequency response having two main resonant peaks and a substantially flat portion therebetween; and

the drive signals have a fundamental frequency positioned in frequency between said main resonant peaks and in said flat portion.

15. Circuitry as claimed in claim 14, wherein said drivable portions are configured to have substantially the same such frequency responses as one another, when driven.

16. Circuitry as claimed in claim 14, wherein the drivable portions have substantially the same configuration as one another.

17. Circuitry as claimed in claim 14, wherein:

each said drivable portion comprises a capacitance in series with its coil, and a ballast circuit; and

for each said drivable portion, its coil, its series capacitance and its ballast circuit are configured such that that drivable portion has such a frequency response when driven.

18. Circuitry as claimed in claim 17, wherein:

the series capacitances in said drivable portions are substantially the same as one another;

the ballast circuits in said drivable portions are substantially the same as one another; and

the coils, the series capacitances and the ballast circuits are configured in substantially the same way in each of the drivable portions.

19. Circuitry as claimed in claim 14, wherein the circuitry is configured such that said feedback signal is obtained from only one of the portions that are driven.

20. Circuitry as claimed in claim 19, wherein the circuitry is configured such that the feedback signal is indicative of a voltage or current or power signal over the primary coil of that portion.

21. Circuitry as claimed in claim 14, wherein:

the circuitry is configured such that a separate such feedback signal is obtained from each of the portions that are driven; and

the control means is operable to carry out said control in dependence upon one or more of said feedback signals.

22. Circuitry as claimed in claim 1, wherein:

the circuitry is configured such that a separate such feedback signal is obtained from each of the portions that are driven and/or from the or each secondary unit receiving power inductively from the circuitry;

each or each but one of the drivable portions comprises a controllable element; and

the control circuit is operable in response to said feedback signals to carry out said control by controlling the controllable elements.

23. Circuitry as claimed in claim 22, wherein the control circuit is operable to employ said controllable elements to regulate the characteristics of the driven coils relative to one another.

24. Circuitry as claimed in claim 22, wherein the or each said controllable element is a variable reactance.

25. Circuitry as claimed in claim 22, wherein the or each said controllable element is a variable capacitance.

26. Circuitry as claimed in claim 22, wherein the or each said controllable element is operable under such control to vary a fundamental frequency of a said drive signal in its said portion.

27. Circuitry as claimed in claim 26, wherein the or each said controllable element is a tuneable inverter or half-bridge circuit.

28. Circuitry as claimed in claim 22, wherein each said drivable portion has a capacitance in series with its coil.

29. Circuitry as claimed in claim 1, wherein the or each said dummy coil is an inductor which is shielded or located away from a power transfer area of the circuitry such that, when driven, does not generate an electromagnetic field that affects the electromagnetic field generated by primary coil or coils.

30. Circuitry as claimed in claim 29, wherein the inductance of a said dummy coil is substantially the same as the inductance of a said primary coil.

31. Circuitry as claimed in claim 1, configured such that said primary coils when driven have the same polarity as one another.

32. Circuitry as claimed in claim 1, configured such that, when driven, one or more of said coils have a different polarity from one or more other said coils.

33. An inductive power transfer system, comprising:

a primary unit operable to generate an electromagnetic field; and

as least one secondary unit, separable from the primary unit, configured to receive power wirelessly by electromagnetic induction from the primary unit when in proximity thereto,

wherein the primary unit comprises circuitry as claimed in claim **1**.

34. Circuitry for use in a primary unit of an inductive power transfer system to generate a time-varying electromagnetic field so as to transfer power wirelessly by electromagnetic induction to a secondary unit of the system, the secondary unit being separable from the primary unit, the circuitry comprising:

a drivable portion comprising a primary coil; and

driving circuit operable to supply the drivable portion with a drive signal having a predetermined fundamental frequency so as to cause the primary coil to generate said electromagnetic field,

wherein:

the drivable portion is configured such that, when driven it has a frequency response having two main resonant peaks and a substantially flat portion therebetween; and

the driving circuit is configured such that said fundamental frequency is positioned in frequency between said main resonant peaks and in said flat portion.

35. Circuitry as claimed in claim **34**, wherein:

when driven, the primary coil of the drivable portion is connected in series with a capacitance, and to a ballast circuit; and

the primary coil, series capacitance and ballast circuit are configured to have a frequency response when the driveable portion is driven.

* * * * *