UNITED STATES PATENT AND TRADEMARK OFFICE

BEFORE THE PATENT TRIAL AND APPEAL BOARD

SAMSUNG ELECTRONICS CO., LTD.
Petitioner

v.

MOJO MOBILITY INC.
Patent Owner

Patent No. 11,342,777

PETITION FOR *INTER PARTES* REVIEW
OF U.S. PATENT NO. 11,342,777

TABLE OF CONTENTS

I. INTRODUCTION 1

II. MANDATORY NOTICES 1

III. PAYMENT OF FEES 2

IV. GROUNDS FOR STANDING 2

V. PRECISE RELIEF REQUESTED AND GROUNDS 2

VI. LEVEL OF ORDINARY SKILL 4

VII. THE '777 PATENT 4

VIII. CLAIM CONSTRUCTION 5

IX. DETAILED EXPLANATION OF GROUNDS 6

A. Ground 1: Claims 1-3, 5, 6, 9-11, 13, 14, and 24 are obvious over *Sogabe* in view of *Azancot* 6

1. Claims 1 and 24 6

2. Claim 2 47

3. Claim 3 48

4. Claim 5 48

5. Claim 6 49

6. Claim 9 50

7. Claim 10 56

8. Claim 11 58

9. Claim 13 58

10. Claim 14 59

B. Ground 2: Claim 6 is obvious over *Sogabe* in view of *Azancot* and *Walley* 60

1. Claim 6 60

C. Ground 3: Claim 7 is obvious over *Sogabe* in view of *Azancot* and *Baarman* 62

1. Claim 7 62

D. Ground 4: Claim 8 is obvious over *Sogabe* in view of *Azancot* and *Muratov* 68

1. Claim 8 68

X. DISCRETIONARY DENIAL IS NOT APPROPRIATE 72

XI. CONCLUSION 77

LIST OF EXHIBITS

Ex. 1001	U.S. Patent No. 11,342,777
Ex. 1002	Declaration of R. Jacob Baker, Ph.D., P.E.
Ex. 1003	Curriculum Vitae of R. Jacob Baker, Ph.D., P.E.
Ex. 1004	Prosecution History of U.S. Patent No. 11,342,777
Ex. 1005	U.S. Patent No. 8,369,905 ("*Sogabe*")
Ex. 1006	U.S. Patent No. 8,090,550 ("*Azancot*")
Ex. 1007	U.S. Patent No. 8,390,249 ("*Walley*")
Ex. 1008	U.S. Patent Application Publication No. 2010/0007307 ("*Baarman*")
Ex. 1009	U.S. Patent No. 9,294,153 ("*Muratov*")
Ex. 1010	Wireless Power Consortium, System Description: Wireless Power Transfer, Volume 1: Low Power, Version 1.0.1 (October 2010)
Ex. 1011	D. van Wageningen, The Qi Wireless Power Standard, IEEE (October 2010)
Ex. 1012	U.S. Patent Application Publication No. 2011/0018360 ("*Baarman II*")
Ex. 1013	U.S. Patent Application Publication No. 2011/0163713 ("*Wang*")
Ex. 1014	U.S. Patent Application Publication No. 2009/0096413 ("*Partovi*")
Ex. 1015	Leon Adams, Choosing the Right Architecture for Real-Time Signal Processing Designs, Texas Instruments (November 2002), accessed at https://www.ti.com/lit/wp/spra879/spra879.pdf.

Ex. 1016	Prosecution History of U.S. Patent No. 9,178,369
Ex. 1017	Prosecution History of U.S. Patent No. 10,141,770
Ex. 1018	RESERVED
Ex. 1019	U.S. Provisional Patent Application No. 61/478,020 filed April 21, 2011
Ex. 1020	U.S. Provisional Patent Application No. 61/433,833 filed January 18, 2011
Ex. 1021	Mojo Mobility's Infringement Contentions in *Mojo Mobility Inc. v. Samsung Elecs. Co., Ltd.*, No. 2:22-cv-00398 (E.D. Tex.) (February 28, 2023)
Ex. 1022	Memorandum from Director Vidal (June 21, 2022)
Ex. 1023	Federal Court Management Statistics (December 2022)
Ex. 1024	Docket Control Order of March 28, 2023, *Mojo Mobility Inc. v. Samsung Elecs. Co., Ltd.*, No. 2:22-cv-00398 (E.D. Tex.)
Ex. 1025	Mojo Mobility's Infringement Chart for U.S. Patent No. (Ex. 7) accompanying Mojo Mobility's Infringement Contentions in *Mojo Mobility Inc. v. Samsung Elecs. Co., Ltd.*, No. 2:22-cv-00398 (E.D. Tex.) (February 28, 2023)
Ex. 1026	Microcontrollers, Pushpinder Singh, Massachusetts Institute of Technology, Sept. 25, 2009, accessed at https://web.archive.org/web/20090925183946/https://web.mit.edu/rec/www/workshop/microcontrollers.html.
Ex. 1027	U.S. Patent Application Publication No. 2008/0214211 ("*Lipovski*")
Ex. 1028	U.S. Patent No. 5,798,828 ("*Thomas*")
Ex. 1029	U.S. Patent No. 8,193,764 ("*Jakubowski*")
Ex. 1030-1034	RESERVED

Ex. 1035	U.S. Patent No. 8,234,509 ("*Gioscia*")
Ex. 1036	RESERVED
Ex. 1037	U.S. Patent No. 9,407,327 ("*Kirby*")
Ex. 1038	Watson, J., Mastering Electronics, Third Ed., McGraw-Hill, Inc. (1990) ("*Watson*")
Ex. 1039	Sedra, A., *et al.*, Microelectronic Circuits, Fourth Ed., Oxford University Press (1998) ("*Sedra*")
Ex. 1040	Physics, Henry Semat et al., Rinehart & Co., Inc., 1958, Chapters 29-32 ("*Semat*")
Ex. 1041	GB Patent Application Publication No. 2202414 ("*Logan*")
Ex. 1042	U.S. Patent No. 7,226,442 ("*Sheppard*")
Ex. 1043	U.S. Patent No. 6,489,745 ("*Koreis*")
Ex. 1044	U.S. Patent No. 6,960,968 ("*Odendaal*")
Ex. 1045	International Patent Application Publication No. WO1996040367 ("*WangII*")
Ex. 1046	International Patent Application Publication No. WO2003/096361 ("*Cheng*")
Ex. 1047	U.S. Patent No. 6,366,817 ("*Kung*")
Ex. 1048	AN710 Antenna Circuit Design for RFID Applications
Ex. 1049	U.S. Patent Application Publication No. 2006/0145660A1 ("*Black*")
Ex. 1050	U.S. Patent No. 5,780,992 ("*Beard*")
Ex. 1051	U.S. Patent Application Publication No. 2005/0068019 ("*Nakamura*")
Ex. 1052	U.S. Patent No. 6,912,137 ("*Berghegger*")

Ex. 1053	U.S. Patent No. 8,618,770 ("*BaarmanIII*")
Ex. 1054	U.S. Patent No. 8,884,468 ("*Lemmens*")

I. INTRODUCTION

Samsung Electronics Co., Ltd. ("Petitioner") requests *inter partes* review of claims 1-3, 5-11, 13-14, and 24 ("challenged claims") of U.S. Patent No. 11,342,777 ("the '777 patent") (Ex. 1001) assigned to Mojo Mobility Inc. ("PO"). For the reasons below, each challenged claim should be found unpatentable and canceled.

II. MANDATORY NOTICES

Real Parties-in-Interest: Petitioner identifies the following as the real parties-in-interest: Samsung Electronics Co., Ltd., and Samsung Electronics America, Inc.

Related Matters: The '777 patent is at issue in the following matter(s):

- *Mojo Mobility Inc. v. Samsung Electronics Co., Ltd.*, No. 1-22-cv-00398 (E.D. Tex.) (asserting the '777 patent and also U.S Patent Nos. 7,948,208, 9,577,440, 11,292,349, 11,316,371, 11,201,500, and 11,462,942) ("Texas Litigation").
- Petitioner is filing concurrently herewith a petition for *inter partes* review challenging other claims of the '777 patent.

The '777 patent issued from Application No. 16/199,904, which was filed as a continuation-in-part of Application No. 14/929,315 (now U.S. Patent No. 10,141,770), which was filed as a continuation-in-part of Application No. 13/352,096 (now U.S. Patent No. 9,178,369 ("the '369 patent")), and claims priority

to U.S. Provisional Application No. 61/546,316 (filed Oct. 12, 2011), U.S. Provisional Application No. 61/478,020 (filed Apr. 21, 2011) ("'020 provisional"), and U.S. Provisional Application No. 61/433,883 (filed Jan. 18, 2011) ("'883 provisional"). (Ex. 1001, Cover.)

Counsel and Service Information: Lead counsel: Joseph E. Palys (Reg. No. 46,508), and Backup counsel are (1) Naveen Modi (Reg. No. 46,224) and (2) Kevin Stewart (Reg. No. 78,581). Service information is Paul Hastings LLP, 2050 M St., Washington, D.C., 20036, Tel.: 202.551.1700, Fax: 202.551.1705, email: PH-Samsung-MojoMobility-IPR@paulhastings.com. Petitioner consents to electronic service.

III. PAYMENT OF FEES

The PTO is authorized to charge any fees due during this proceeding to Deposit Account No. 50-2613.

IV. GROUNDS FOR STANDING

Petitioner certifies that the '777 patent is available for review and Petitioner is not barred or estopped from requesting review on the grounds identified herein.

V. PRECISE RELIEF REQUESTED AND GROUNDS

The challenged claims should be canceled as unpatentable based on the following grounds:

Ground 1: Claims 1-3, 5, 6, 9-11, 13-14, and 24 are unpatentable under pre-AIA[1] 35 U.S.C. § 103 as being obvious over *Sogabe* in view of *Azancot*;

Ground 2: Claim 6 is unpatentable under 35 U.S.C. § 103 as being obvious over *Sogabe* in view of *Azancot* and *Walley*;

Ground 3: Claim 7 is unpatentable under 35 U.S.C. § 103 as being obvious over *Sogabe* in view of *Azancot* and *Baarman*; and

Ground 4: Claim 8 is unpatentable under 35 U.S.C. § 103 as being obvious over *Sogabe* in view of *Azancot* and *Muratov*.

The '777 patent claims priority via provisional applications dating back to January 18, 2011 and October 12, 2011. (§II.) PO has stated in the Texas Litigation the following priority dates (and possibly three months earlier): 1/18/2011: claims 1, 2, 6-7, 9, 10-11, 13-14, and 24;[2] and 10/12/2011: claims 5 and 8. (Ex. 1021, 7-8.) Petitioner assumes such dates for purposes of this proceeding without conceding that the '777 patent is entitled to them.[3]

---

[1] Petitioner does not concede that pre-AIA law governs the '777 patent.

[2] Petitioner assumes claim 3 has same effective date.

[3] Petitioner reserves right to challenge priority as necessary given the '020 and '833 provisionals do not provide written description support for at least the as-claimed features of claims 5 and 8. (*See* Exs. 1019-1020.)

Sogabe was filed 7/15/2009, *Azancot* was filed 9/21/2009, *Walley* was filed 6/3/2010, *Muratov* was filed 2/22/2011 (relevant to claims 5, 8), and *Baarman* was filed 7/9/2009, and thus each qualifies as prior art at least under 35 U.S.C. § 102(e) based on the above-identified effective dates for relevant challenged claims.

None of the above prior art references were substantively considered during prosecution of the '777 patent. (Ex. 1004; Exs. 1016- 1017; *infra* §X.) *Baarman* and a patent application publication relating to *Azancot* were submitted in IDSs during prosecution of the '369 patent (*supra* §II). (Ex. 1016, 587-616, 1079-1097.)

VI. LEVEL OF ORDINARY SKILL

A person of ordinary skill in the art as of the claimed priority date of the '777 patent ("POSITA") at least a master's degree in electrical engineering, or a similar discipline, and two or more years of experience with wireless charging systems, including, for example, inductive power transfer systems. (Ex. 1002, ¶¶21-22.)[4] More education can supplement practical experience and vice versa. (*Id.*)

VII. THE '777 PATENT

The '777 patent generally relates to wireless charging/powering systems using inductive charging protocols, such as *e.g.*, uni-directional messaging and bi-

[4] Petitioner submits the declaration of R. Jacob Baker, Ph.D., P.E. (Ex. 1002), an expert in the field of the '777 patent. (Ex. 1002, ¶¶1-13; Ex. 1003.)

directional messaging protocols. (Ex. 1001, Abstract, 1:45-2:3, 2:41-52, 13:52-58.) During prosecution, in response to multiple rejections, the applicant substantially rewrote the claims in the current form (with correction) (Ex. 1004, 18, 91-244, 412-414), which led to allowance of the claims (*id.*, 75-77). However, as demonstrated below, the claimed features are a compilation of known technologies/techniques taught/suggested by the prior art identified here. (*Infra* §IX; Ex. 1002, ¶¶87-209; Exs. 1005-1015, 1027-1054.)

VIII. CLAIM CONSTRUCTION

The Board only construes the claims when necessary to resolve the underlying controversy. *Toyota Motor Corp. v. Cellport Systems, Inc.*, IPR2015-00633, Paper No. 11 at 16 (Aug. 14, 2015). For purposes of this proceeding, Petitioner believes that no special constructions of the claim terms are necessary to assess whether the challenged claims are unpatentable over the asserted prior art.[5] (Ex. 1002, ¶68.)

---

[5] Petitioner reserves all rights to raise claim construction and other arguments (*e.g.*, §112, etc.) in district court as relevant to those proceedings. *See, e.g.*, *Target Corp. v. Proxicom Wireless, LLC*, IPR2020-00904, Paper 11 at 11–13 (Nov. 10, 2020). A comparison of the claims to any accused products in litigation may raise controversies that are not presented here given the similarities between the art and the patent.

IX. DETAILED EXPLANATION OF GROUNDS[6]

A. Ground 1: Claims 1-3, 5, 6, 9-11, 13, 14, and 24 are obvious over *Sogabe* in view of *Azancot*

1. Claims 1 and 24[7]

a) 1(a)/24(a): A [base] system for inductive charging of an electronic device comprising an inductive charging receiver and a battery electrically coupled to the inductive charging receiver, the [base] system comprising:

To the extent limiting, *Sogabe* discloses these limitations. (Ex. 1002, ¶¶70-75, 87-91.)

For instance, *Sogabe* discloses examples of a system including a charging electronic apparatus, such as a charger/cradle 500, that inductively powers/charges an electronic apparatus, such as a phone 510 (or other type of electronic apparatus with a load/battery), as exemplified regarding FIGS. 1A-1C (below). (Ex. 1005, 1:43-5:7, 5:59-6:38, FIGS. 1A-1C; Ex. 1002, ¶88.)

---

[6] References to prior art exhibits other than the asserted prior art identified in each of the grounds are to demonstrate/support Dr. Baker's opinions regarding a POSITA's state-of-art knowledge at the time, as applicable.

[7] Claim 24 substantively tracks claim 1. The differences between the claim language is represented/identified by blue highlighting. Limitations 1(m)-1(n) and 24(m)-24(n) are addressed separately. (§§IX.A.1(m)-(p).)

FIG. 1A

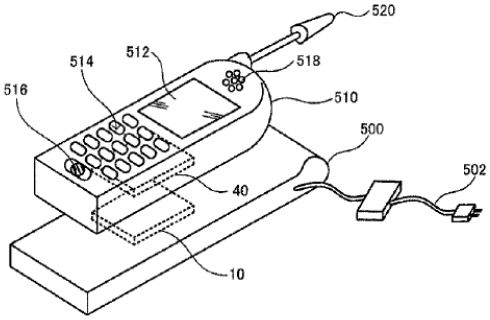

FIG. 1B

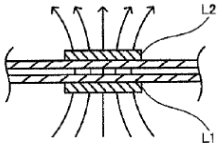

FIG. 1C

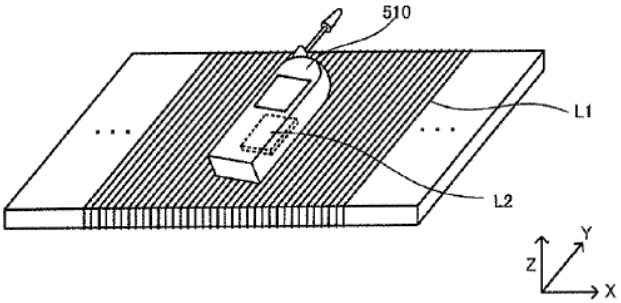

The charger/cradle includes a power transmission device 10 ("PTD10") and the cell phone (or other device) ("electronic device") includes a power receiving device 40 ("PRD40") coupled to a load/battery 90/94 ("battery"). (*Id.*, 5:16-19, 5:60-65, 6:39-55; FIG. 2 (annotated below); Ex. 1002, ¶89.)

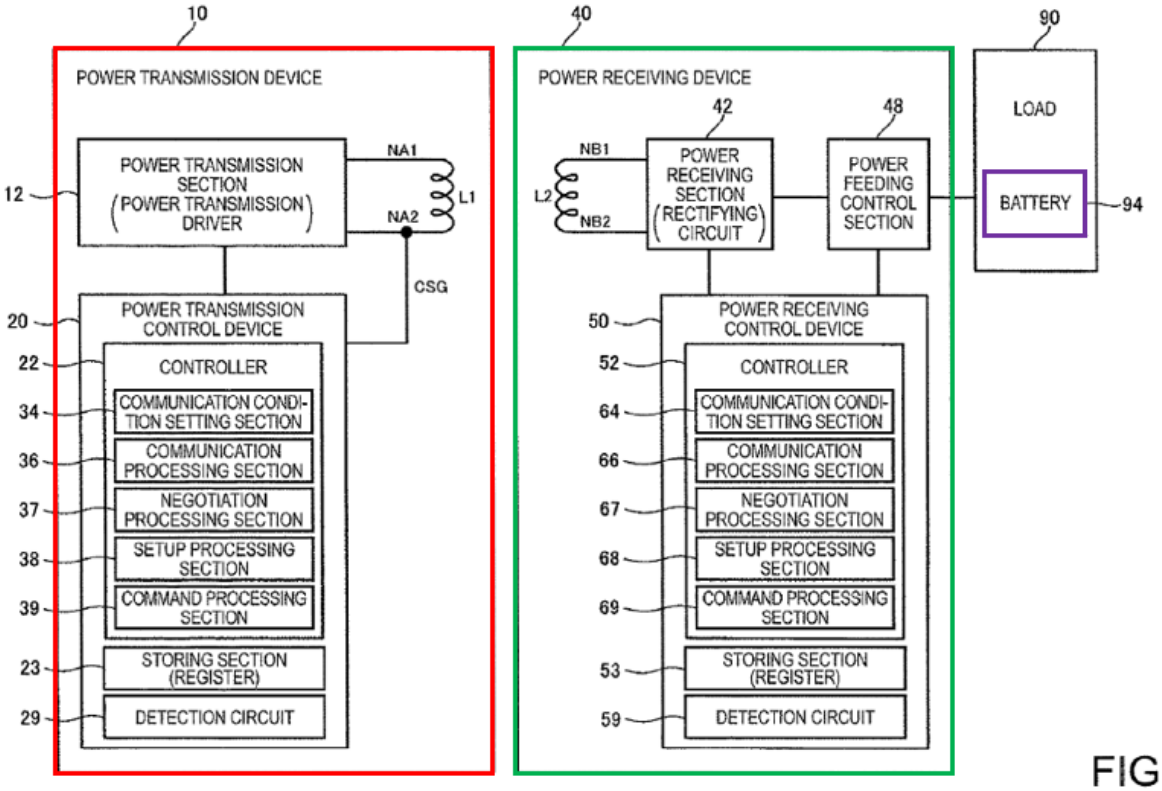

FIG. 2

(*See also id.*, FIG. 9 (annotated below), 5:33-35, 22:7-24:17 (describing additional component details of an exemplary system including PTD10 and PRD40).)

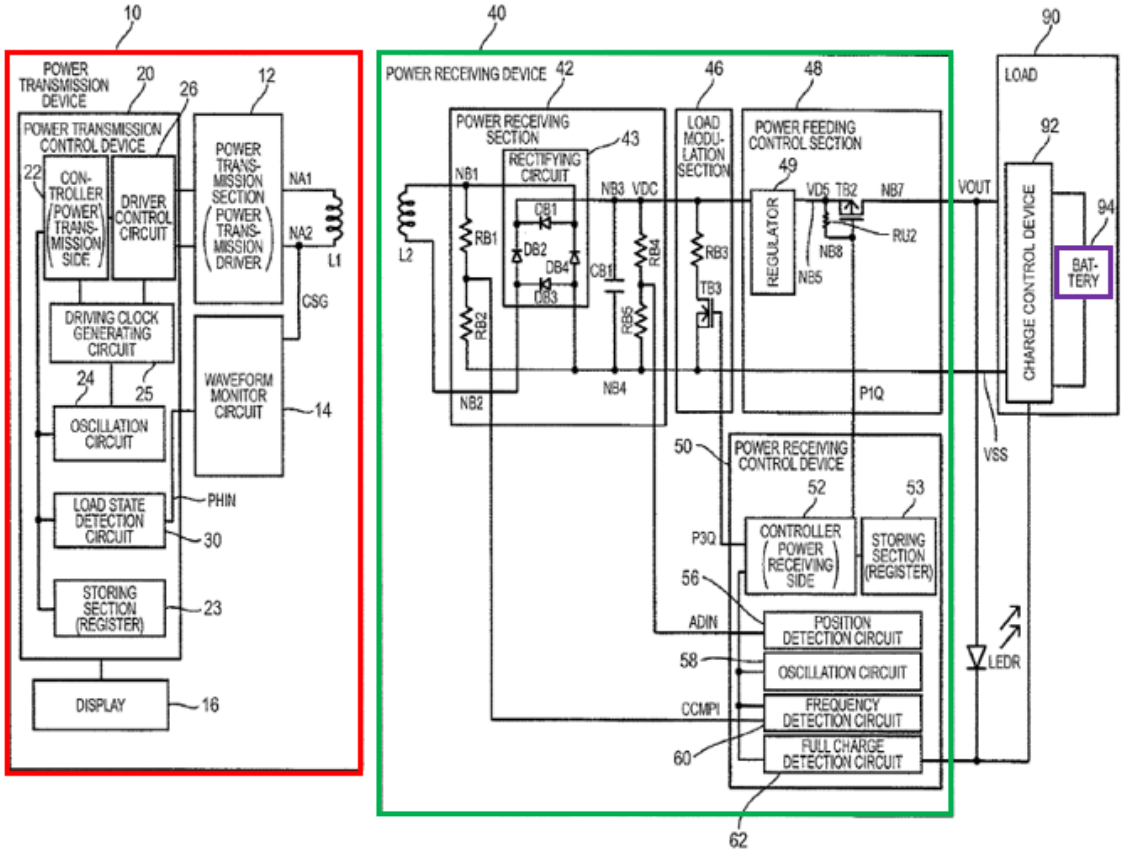

FIG. 9

As discussed further below, *Sogabe* describes how the components within PTD10 and PRD40 operate to provide/control inductive powering/charging of battery 94 of the "electronic device" (*e.g.*, cell phone), via electromagnetically coupled primary coil L1 and secondary coil L2. (§§IX.A.1(b)-(p), Ex. 1005, 6:56-14:32; *e.g.*, *id.*, 8:13-22 (PRD40 includes power receiving section 42 ("PRS42"), power feeding control section 48 ("PFCS48"), and power receiving control device 50 ("PRCD50"), although the "structures" of PRD40 and PRCD50 "are not limited to those shown in FIG. 2, and various modification, such as omitting a part of components (e.g., the secondary coil), adding another component (e.g., a load

modulation section), and changing connections can be made"), 8:23-36; *see also id.*, FIGS. 3A-5C, 14:33-18:9; Ex. 1002, ¶90.)

Accordingly, the apparatus (*e.g.*, charger/cradle) including PTD10, or PTD10 itself, is both a "base system" (1(a)) and a "system" (24(a)) as claimed. (Ex. 1005, 5:60-63, FIGS. 1A.) The apparatus including PRD40 (*e.g.*, cell phone 510 or other exemplary device (*id.*, 6:9-14)) and battery 94 ("battery") is an "electronic device," wherein the battery is "electrically coupled to" an "inductive charging receiver" (*e.g.*, PRD40 or PRS42, PFCS48, and PRCD50). (Ex. 1002, ¶91.) Also, the charger apparatus with PTD10, cell phone apparatus PRD40 and its load/battery 90/94, collectively is also a "system" (24(a)). (Ex. 1002, ¶91; *infra* §§IX.A.1(b)-(p).)

b) 1(b)/24(b): an inductive charging coil;

Sogabe discloses this limitation. (Ex. 1002, ¶92.) For instance, *Sogabe* discloses that the "base system"/"system" (§IX.A.1(a)) includes a "primary coil L1" ("inductive charging coil") that is used to inductively transmit power in a contactless manner. (Ex. 1005, 1:20-23 ("The contactless power transmission makes it possible to perform transmission of electric power by utilizing electromagnetic induction without using metal contact."), 6:15-22, 6:50-57, FIGs. 2, 9.)

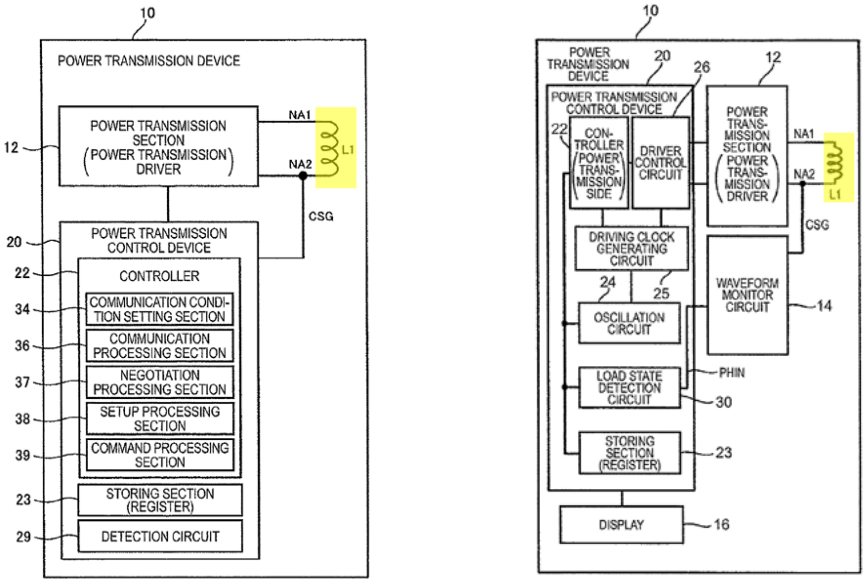

(*Id.*, FIGs. 2, 9 (annotated and excerpted).)

c) <u>1(c)/24(c)</u>: a coil drive circuit electrically coupled to the inductive charging coil, wherein the coil drive circuit provides power to the inductive charging coil by switching a voltage input to the inductive charging coil at an operating frequency;

Sogabe discloses this limitation. (Ex. 1002, ¶¶93-97.) For instance, *Sogabe* discloses that the "base system"/"system" (§IX.A.1(a)) includes power transmission section 12 ("PTS12") ("coil drive circuit") that includes a power transmission driver to supply an "AC voltage having a predetermined frequency at transmitting power" to the primary coil L1 ("electrically coupled to the inductive charging coil"). (Ex. 1005, 6:56-7:14, FIGs. 2, 9.)

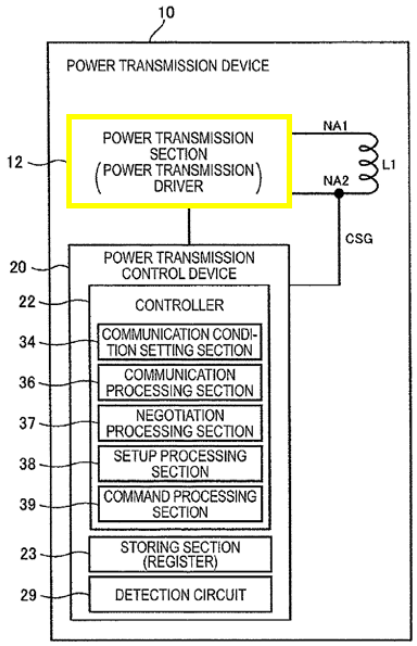

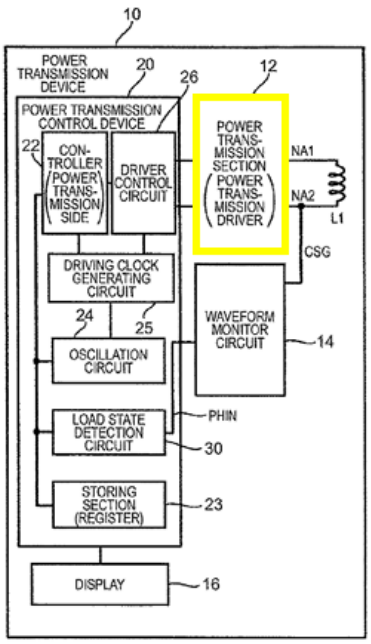

(*Id.*, FIGs. 2, 9 (annotated and excerpted).)

For example, *Sogabe* discloses that PTS12 includes a power transmission driver for driving each of the two ends of the primary coil, where the power transmission drivers are inverter circuits. (*Id.*, 7:4-14.) The drivers receive a "control signal" that is driven at a desired driving frequency to control the driver. (Ex. 1005, 7:4-14, 22:28-37.) This control signal causes the drivers in the PTS12 to output an AC voltage to drive the primary coil L1 ("inductive charging coil"), such that the "coil drive circuit provides power to the inductive charging coil by switching a voltage input to the inductive charging coil at an operating frequency," as claimed. (*Id.*, 6:65-7:14, 22:28-37; Ex. 1002, ¶¶94-95.) *Sogabe* further discloses that PTS12 may provide power to the primary coil by switching the voltage input at a frequency

"f1" during normal power transmission and a frequency "f01" during a setup phase. (Ex. 1005, 14:41-46, 15:34-50, 16:14-29, 17:41-47; Ex. 1002, ¶¶94-95.)

A POSITA would have appreciated *Sogabe*'s use of inverters to drive the coil at a desired frequency would have been consistent with conventional wireless power transmission circuits of the time. (Ex. 1002, ¶96; Ex. 1006 (confirming POSITA's state-of-art knowledge), 10:55-60 ("[A] direct current voltage source 2242 is intermittently connected to a primary coil L1 by a switch 2244. This produces a varying voltage signal V1(t) in the primary coil L1 which induces a secondary voltage V2 in a secondary coil L2."), 10:63-67 ("The switch 2244 is controlled by a driver 2248 which receives a pulsing signal Fd from a clock 2246. The pulsing signal Fd determines the frequency with which the direct current voltage source 2242 is connected to the primary coil L1."), FIG. 2A; Ex. 1008, ¶0033 (describing a similar driver switching to generate a "desired operating frequency"), FIG. 2C; Ex. 1010, pp. 12-14.)

d) 1(d)/24(d): a current detection circuit electrically coupled to the inductive charging coil; and

Sogabe discloses this limitation. (Ex. 1002, ¶¶98-101.) For instance, *Sogabe* discloses that the "base system"/"system" (§IX.A.1(a)) includes a power transmission control device 20 (PTCD20) that includes a detection circuit 29, which in the specific structural example shown in figure 9 corresponds to load state

detection circuit 30. (Ex. 1005, 7:26-30, 7:50-55, 22:8-11, 22:23-24, 22:53-57, FIGs. 2, 9.)

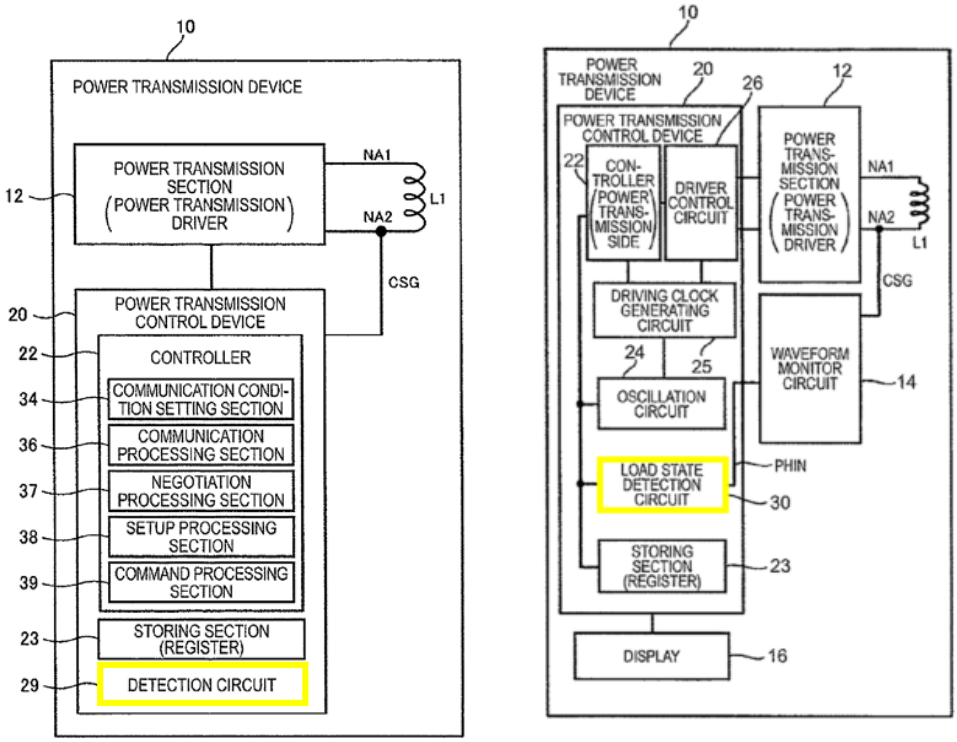

(*Id.*, FIGs. 2, 9 (annotated and excerpted).)

As shown in figure 14A below, *Sogabe* discloses that detection circuit 30 is coupled to the coil L1 and "detects current flowing at the coil terminal" ("current detection circuit electrically coupled to the inductive charging coil"), where *Sogabe* further discloses that such current detection can be used as a communication method to receive data from the power receiving side. (*Id.*, 7:50-63, 20:41-46, 20:53-57, 28:17-19 ("As for the communication method, various methods can be assumed.

FIG. 14A shows an example of a third communication method **detecting a load state by current detection**.")[8], 17-19-26; Ex. 1002, ¶99.)

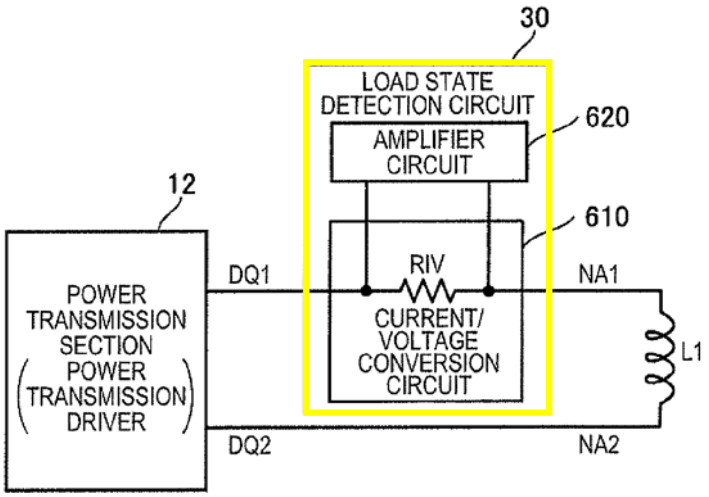

FIG.14A

(*Id.*, FIG. 14A (annotated).)

Sogabe's disclosure is consistent with that of the '777 patent, which discloses using a current detection circuit to detect data transmissions from a receiver device. (Ex. 1001, 12:47-57; Ex. 1002, ¶¶100-101.)

e) 1(e)/24(e): a microcontroller, wherein the microcontroller is configured for:

Sogabe in view of *Azancot* discloses and/or suggests this limitation. (Ex. 1002, ¶¶102-112.) *Sogabe* discloses PTD10 includes a controller 22 that may be

[8] All emphasis is added unless noted otherwise.

"realized by an ASIC circuit such as a gate array, a micro computer with a program operating on the micro computer, or the like." (Ex. 1005, 7:36-38, 7:28-30, 7:34-35.) Controller 22 controls PTD 10 of charger 500 (or a similar wireless power charger apparatus). (*Id.*, 7:34-38 ("The controller 22 (on the power transmission side) controls the power transmission device 10 and the power transmission control device 20."), 22:8-11, FIGS. 2, 9.)

Sogabe does not explicitly state that its wireless power transmitter controller can be implemented using a "microcontroller." (*See generally* Ex. 1005.) However, a POSITA would have been motivated, and found it obvious, to configure *Sogabe*'s system with such a microcontroller. (Ex. 1002, ¶103.)

As an initial matter, a POSITA would have understood that the "ASIC circuit" and "micro computer" disclosed by *Sogabe* as the controller 22 would correspond to, or could be implemented as, a "microcontroller" as recited in the claims of the '777 patent. Indeed, the '777 patent does not provide detailed implementation details regarding the claimed "microcontroller" and instead presents the microcontroller in a functional sense, thereby evidencing that a POSITA would have been aware of using microcontrollers and would have understood how to implement such microcontrollers to perform certain tasks associated with wireless power transfer. (*See, e.g.*, Ex. 1001, 12:58-13:8, 14:4-9; Ex. 1002, ¶104.)

Moreover, before the alleged time of invention, it was well-known to use a microcontroller to control wireless power devices. (Ex. 1002, ¶105.) For instance, *Walley* confirms a POSITA's state-of-art knowledge of using a "micro-controller" to control a wireless power transmitter or receiver that is capable of operating using different protocols. (Ex. 1007, 3:47-55 ("The processing modules … of the WP [wireless power] TX unit 10 and in each of the devices 12-14 may each be a….micro-controller."), 4:14-21 ("The WP TX unit 10 communicates with the WP transceivers 24, 30 of the devices 12-14 via….one or more standardized protocols 40, 44 and/or one or more proprietary protocols 42, 46."), FIG. 1.) Such microcontroller use was well-understood before the alleged time of invention. (Ex. 1002, ¶105; *see, e.g.*, Ex. 1012, ¶¶0059, 0061; Ex. 1013, ¶¶0023-0024; Ex. 1014, FIGs. 10-11.)

As one such example, *Azancot* discloses using a microcontroller to control a wireless power system. (Ex. 1002, ¶106.) Similar to *Sogabe*, *Azancot* relates to a contactless, inductive power system. (Ex. 1006, 1:17-19 ("The present invention relates to…controlling power transfer across an inductive power coupling."), 1:38-53, 8:44-47 ("regulating power transfer across a contactless inductive coupling"), FIGs. 1, 2A.) For example, figure 2a of *Azancot* shows such an inductive power transfer system, which includes a primary coil L_1 that is driven to wirelessly power a load 2280 through secondary coil L_2. (*Id.*, 8:60-9:30; *see also id.*, 1:38-53.)

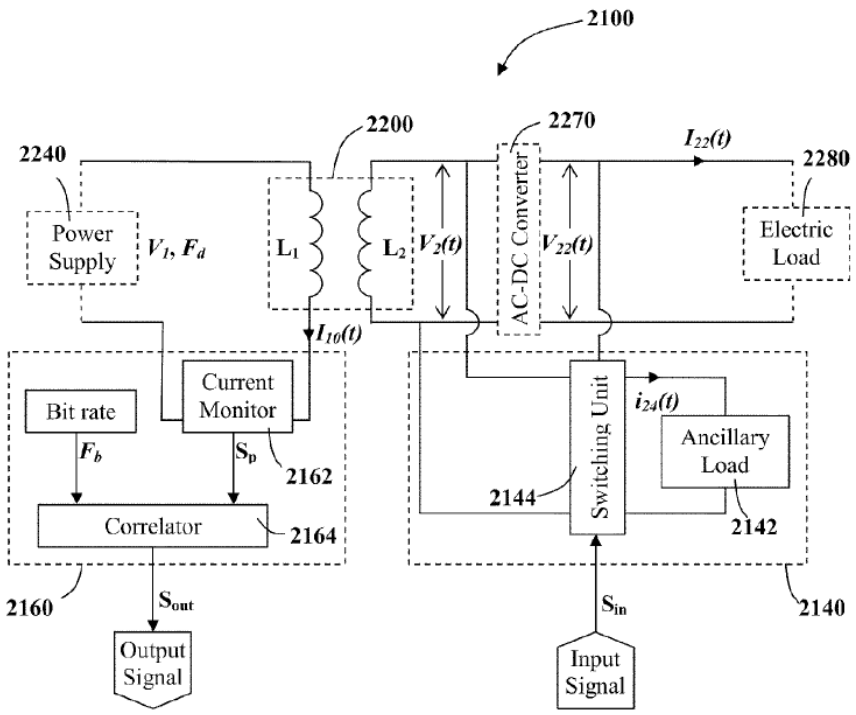

Fig. 2a

(*Id*., FIG. 2a.)

Azancot also discloses that the circuitry on the device driving the primary coil L_1 also includes a flyback power source 2240F comprising a driver 2248, and a current monitor 2162 (*id.*, 8:9-11, 10:38-11:3, FIGs. 2A, 2D), similar to the system disclosed by *Sogabe* (§§IX.A.1.a-d). *Azancot* further discloses that circuitry controlling the primary coil L_1 includes a microcontroller 2168, which is used to control the power that is wirelessly transmitted to the load 2280 in the device receiving the power. (Ex. 1006, 8:9-11, 10:38-11:14, FIGs. 2c-d; Ex. 1002, ¶107.)

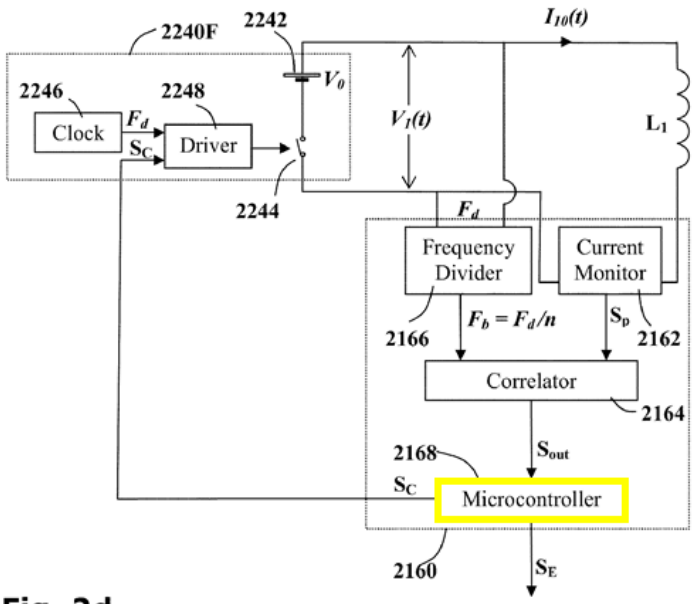

Fig. 2d

(*Id.*, FIG. 2d (annotated).)

Microcontroller 2168 of the power transmission side can process feedback signals from the device receiving power, such that the device can control the wireless output power. (*Id.*, 8:9-11, 8:60-65, 10:11-37, 10:38-52, 11:4-14, FIGs. 2a, 2d.) For instance, *Azancot* discloses that transmission circuit 2140 of the power receiving side can digitally encode information relating to load parameters or other external data. (*Id.*, 9:58-63, 10:20-37, FIG. 2B.) The information sent from the power receiving circuit to the power transmitting circuit can then be used by the microcontroller to control power output. (*Id.*, 10:38-11:14, FIGs. 2C, 2D; Ex. 1002, ¶108.)

It would have been obvious to configure *Sogabe*'s system to include a microcontroller for controlling *Sogabe*'s power transmission device, which was a

common way to control circuits/operations in inductive power transfer systems, as demonstrated by *Azancot* and the state of the art. (Ex. 1002, ¶109.) Indeed, a POSITA would have been motivated to do so for several reasons, including, *e.g.*, to save cost, reduce implementation complexity, and/or achieve other understood benefits associated with such well-known microcontroller use. (Ex. 1002, ¶109; Ex. 1028, 4:3-6 ("Numerous advantages are realized by using a microcontroller unit, including greatly increased cost savings, significant design simplification and size reduction of the overall system."); Ex. 1027, ¶0032 (noting that microcontrollers may be "inexpensive" and "low-power"); Ex. 1014, ¶0192 ("another inexpensive microcontroller"), ¶0295 ("10F220 Programmable IC by Microchip Inc. or another inexpensive microcontroller").) Indeed, microcontroller-based implementations were advantageous because such implementations could be taken to market easily, were inexpensive, streamlined development, and supported robust feature flexibility. (Ex. 1015, 3, 6; *see also* Ex. 1026 (noting that microcontrollers are "cheap and very easy to interface to real world devices").) Moreover, a POSITA would have appreciated that implementing *Sogabe*'s controller with a microcontroller would have been nothing more than an obvious and simple substitution to obtain a predictable microcontroller-based implementation. *KSR Int'l Co. v. Teleflex Inc.*, 550 U.S. 398, 417 (2007).

A POSITA would have had a reasonable expectation of success in implementing the *Sogabe* system with a microcontroller. (Ex. 1002, ¶¶110-111.) For instance, *Sogabe* describes using a variety of standard hardware types to implement the controller (Ex. 1005, 7:36-38), and *Azancot* and the state of the art disclose using microcontrollers to control similar wireless power systems as previously discussed. Nothing was particularly complicated about using a microcontroller to control such a wireless power system. (Ex. 1002, ¶110; Ex. 1007, 3:47-55, 4:14-21, FIG. 1; Ex. 1012, ¶¶0059, 0061; Ex. 1013, ¶¶0023-0024; Ex. 1014, FIGs. 10-11.) Thus, the resulting base system would have been a predictable combination of known components according to known methods (*e.g.*, using a microcontroller to control a wireless power system), and would have produced the predictable result of a base system/system comprising a microcontroller for controlling the base system/system. (Ex. 1002, ¶¶110-111.) *See KSR*, 550 U.S. at 416.

Such reasons, motivations, and expectation of success relating to implementing such a "microcontroller" in the modified *Sogabe* system are applicable to the first mode of operation (addressed below for claim elements (f)-(h) and (m)-(n)) and the second mode of operation (addressed below for claim elements (i)-(l) and (m)-(n)). Thus, for the same reasons explained here, and those respectively below for each claim element, a POSITA would have been motivated

to configure such "microcontroller" to operate in the "first mode of operation" and "second mode of operation" as claimed in claims 1 and 24. (*See* §§IX.A.1.f-n; Ex. 1002, ¶112.)

f) 1(f)/24(f): operating in a first mode of operation using a first protocol, wherein the first protocol is an inductive charging communication-and-control protocol that comprises uni-directional messaging, wherein the first mode of operation comprises:

Sogabe in view of *Azancot* discloses and/or suggests this limitation. (Ex. 1002, ¶¶113-134.) *Sogabe* discloses a two-stage charging operation that allows different power receiving devices to be supported by the charger. The first stage corresponds to a setup stage, whereas the second stage corresponds to normal power transmission, where information sent by the receiving device during the setup stage is used to control power transmission and communication with the receiving device during the normal stage. (Ex. 1005, 3:54-4:65, 9:7-15, 10:38-54, 11:56-12:13; Ex. 1002, ¶113.)

During the setup stage, information—which *Sogabe* refers to as a "communication condition"—is sent from the receiving device to the transmission side via "communication processing using the initial communication condition before the start of normal power transmission, thereby setting the communication condition used in a communication processing after the start of normal power transmission," where the information can be included in a setup frame. (*Id*., 11:33-

55.) *Sogabe* also discloses that the power receiving device 40 transmits a "start frame" during the setup stage. (*Id.*, 16:14-16, 25:64-26:2, FIG. 12, S31.) Transfer of communication condition and start frame information from the receiving device to the transmitting device is performed "under the initial communication condition before the start of normal power operation," whereas "communication after the start of normal power transmission can be performed by using the communication condition." (*Id*., 11:56-61.) (Ex. 1002, ¶¶114-116.)

During setup processing, a communication condition setting section 34 and a communication processing section 36 included in the controller 22 set the communication condition in the transmitter. The communication condition can include information regarding the communication method to use after normal power transmission begins (*e.g.*, load modulation or frequency modulation) as well as information regarding desirable power transmission levels for the receiver device (*e.g.*, 0.5 watts or 15 watts), that is later used during normal power transmission mode. (*Id*., 10:45-11:16, 12:14-37; Ex. 1002, ¶117.)

Such setup processing exemplifies a "first mode of operation," where the "first protocol" corresponds to *Sogabe*'s setup stage communication method that uses the initial communication condition before the start of normal power transmission. (Ex. 1002, ¶118.) As discussed above and below, *Sogabe*'s setup communication method is an "inductive charging communication-and-control

protocol" as it is a communication protocol that controls the inductive charging operations in *Sogabe*'s system.[9] (*See infra* §§IX.A.1.g-h.) As explained, the *Sogabe-Azancot* system comprises a microcontroller that controls the operation of power transmission device 10. (*See supra* §IX.A.1.e; Ex. 1005, 7:34-45, FIGs. 2, 9.) Given that a microcontroller of the *Sogabe-Azancot* system controls and operates the power transmission device, the *Sogabe-Azancot* combination discloses and/or suggests the microcontroller "operating in a first mode of operation using a first protocol" as claimed in claim element 1/24(f) and the other claim elements (for reasons explained here and below). (§§IX.A.1.g-h.) For similar reasons, and those respectively below, the "microcontroller" in the modified *Sogabe* device/system would have been configured to operate in such a first mode of operation that includes processes like those recited in claim elements 1/24(g)-(h) and (m)-(n). (§§IX.A.1.g-h, m-n.) (Ex. 1002, ¶¶118-119.)

[9] In a parent application, PO explained that a charging protocol may be a specific "frequency of operation" point or include a specific "communication method, message structure, etc." (Ex. 1017, 88-89.) Whether under their plain meaning or this interpretation, the *Sogabe-Azancot* combination discloses/suggests the claimed features here.

Sogabe's setup stage communication method "comprises uni-directional messaging" as claimed, given it includes sending information from the receiving device to the transmission device ("uni-directional messaging"), including the above-discussed communication condition and start frame information. (Ex. 1002, ¶¶120-121; Ex. 1005, 11:33-55, 16:14-16, 25:64-26:2.)

FIG. 4A

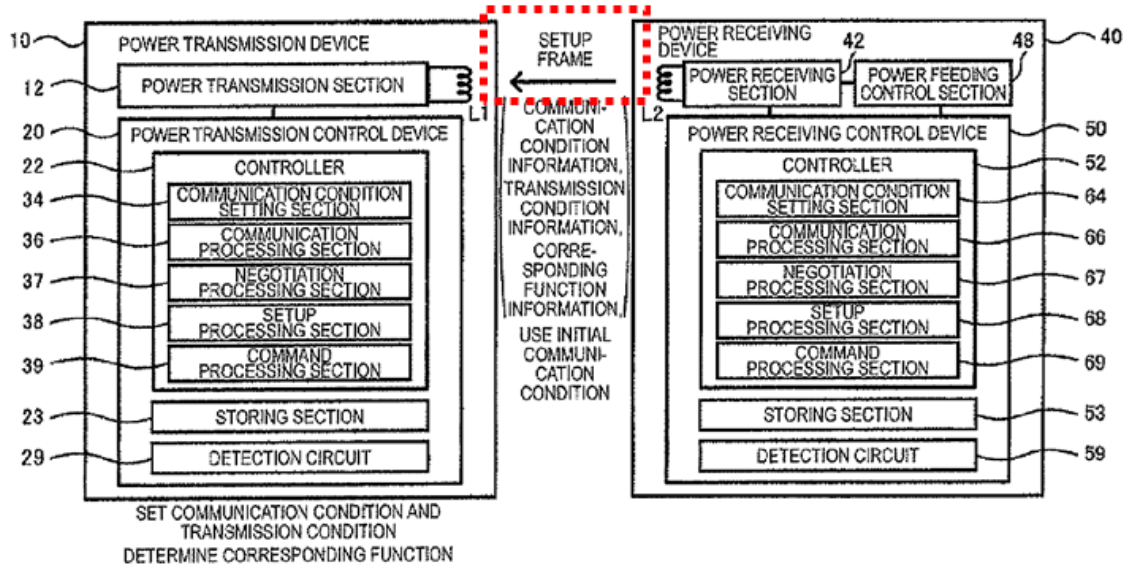

(Ex. 1005, FIG. 4A (illustrating uni-directional messaging during setup operation).)

Even if *Sogabe* is found (or it is argued to) perform bi-directional messaging during the setup stage, *Sogabe* makes clear that uni-directional messaging supports the transfer of the information during the setup phase, as the information is provided from the power receiver to the power transmission device. (Ex. 1005, 9:31-37 ("The embodiment is not limited to the case where communication condition information (transmission condition information) is transmitted to the power transmission device

10 from the power receiving device 40, and is also applicable to a case where communication condition information is transmitted to the power receiving device 40 from the power transmission device 10.”).) (Ex. 1002, ¶121.)

While *Sogabe* discloses that in the embodiment shown in figures 4A and 4B setup frames are sent both from the power receiving device to the power transmission device, as explained by *Sogabe*, the setup frame associated with figure 4B includes functions that are not required for operation; the information included in the setup frame of figure 4A differs from the information that is included in the setup frame of figure 4B. (*Id.*, 21:16-20, 21:55-22:6, FIGS. 4A-B; Ex. 1002, ¶¶122-123.) Additionally, the power receiving device 40 sends the “start frame,” which is never sent by the power transmission device. (Ex. 1005, 16:14-16, 25:64-26:2, FIG. 12, S31.) And neither of the communication condition and start frame information necessitates responsive signaling, such that the first mode comprises uni-directional messaging. (*Id.*, 11:33-55, 16:14-16, 25:64-26:2, FIGS. 11-12.) (Ex. 1002, ¶¶122-123.)

Moreover, even if *Sogabe* were to only disclose bi-directional messaging during the setup phase, claim 1 of the ’777 patent simply requires that the protocol “***comprises*** uni-directional messaging,” where bi-directional (two-way) messaging clearly ***includes*** uni-directional (one-way) messaging. Such an understanding is supported by claim element 1(i), which recites a “second protocol” that “***defines*** bi-

directional messaging." (Ex. 1002, ¶124.) Such an understanding is also consistent with the disclosure of the '777 patent. (Ex. 1001, 14:52-58 ("In the above description, **a uni-directional communication** (from the receiver to the charger) **is described**. However, **this communication can also be bi-directional**….").) (Ex. 1002, ¶125.)

Even if claim elements 1(f)/24(f) are interpreted such that only uni-directional messaging can be used in the first protocol, to the extent not already disclosed by *Sogabe*, such a protocol would have been obvious in view of *Sogabe*'s teachings in view of *Azancot*. As explained, the information regarding what communication method and the charging parameters to be used after the start of normal charging are provided by the receiver to the transmitter and therefore such communications only require uni-directional communication from the receiver to the transmitter. A POSITA would have understood that bi-directional communication is not required to support such functionality and would have found it obvious to use uni-directional communication in order to simplify the setup process. In this way, the modified *Sogabe* system suggests such features. (Ex. 1002, ¶126.)

Moreover, to the extent using only uni-directional messaging is not disclosed or suggested by *Sogabe* alone, it would have been obvious in view of *Azancot*. As discussed above in Section IX.A.1(e), *Azancot* discloses uni-directional messaging from the power receiving device to the power transmitting device to control the

power transmission. (*Supra* §IX.A1(e); Ex. 1006, 8:60-65, 9:58-63, 10:11-11:14, FIGs. 2a-2d.) Therefore, similar to *Sogabe*, *Azancot* discloses sending power transmission control information from the power receiving device to the power transmitting device. Such information in *Azancot* is sent using uni-directional messaging, and, in view of *Azancot*'s teachings in context of the state of the art, a POSITA would have found it obvious to use uni-directional messaging for the setup communications in *Sogabe*. (Ex. 1002, ¶127.)

A POSITA would have had good reason for having *Sogabe*'s first protocol "comprise[] uni-directional messaging." (Ex. 1002, ¶¶128-133.) For instance, having the first protocol comprise uni-directional messages, like those disclosed by *Azancot*, would have allowed the *Sogabe* system to dynamically meet the power needs of the power receiving device to better address changing load conditions, voltage and current needs, temperature conditions, etc. (Ex. 1002, ¶¶128-129; Ex. 1006, 10:20-37, 3:4-22, 7:21-37.) Indeed, having the first protocol comprise such uni-directional control messages would have increased responsiveness by preventing a lengthy power negotiation process that *Sogabe* discloses and prevented improper powering conditions. (Ex. 1002, ¶130; Ex. 1005, FIG. 6; Ex. 1006, 10:20-37, 3:4-22, 7:21-37.)

A POSITA would have recognized that allowing the power transmission device to process such uni-directional control messages would have increased the

interoperability and compatibility of the *Sogabe* wireless power transmission device with uni-directional messaging systems (similar to that disclosed by *Azancot*), which was a desired feature known in the art. (Ex. 1002, ¶131; Ex. 1005, 1:33-41, 1:66-2:9, 9:24-37, 11:12-16; Ex. 1007, 1:63-67; Ex. 1029, 1:52-58; Ex. 1008 (disclosing a similar wireless power system comprising uni-directional messaging); Ex. 1010 (same).) A POSITA would have also appreciated that using uni-directional power control messages in the first mode of operation would have reduced communication complexity while still allowing the remote device to take full control of power transfer, consistent with that known in the art. (Ex. 1002, ¶¶131-132; Ex. 1006, 10:20-37, 3:4-22, 7:21-37; Ex. 1010 (noting that a wireless power protocol comprising uni-directional messaging was "simple" but still enabled a "Mobile Device to take full control of the power transfer").)

A POSITA would have had a reasonable expectation of success in having the first protocol "comprise[] uni-directional messaging." (Ex. 1002, ¶¶133-134.) For instance, *Sogabe* discloses/suggests that a variety of conventional controller hardware types would have been appropriate to realize controller 22 and process various signals in a first mode of operation. (Ex. 1005, 7:36-38, FIGs. 3A-5C). And *Azancot* discloses using a microcontroller to control similar wireless power systems with uni-directional messaging as previously discussed. Thus, the resulting base system would have been a predictable combination of known components according

to known methods (*e.g.*, using a microcontroller processing signals to control wireless power output), and would have produced the predictable result of a base system/system comprising a microcontroller operating in a first mode with a first protocol that "comprises uni-directional messaging." (Ex. 1002, ¶¶133-134.) *See KSR*, 550 U.S. at 416.

g) 1(g)/24(g): receiving, using the current detection circuit, a first communication from the inductive charging receiver of the electronic device, wherein the first communication is based on the first protocol; and

Sogabe in view of *Azancot* discloses and/or suggests this limitation. (Ex. 1002, ¶¶135-136.) *Sogabe* discloses "receiving" communications from a power receiving device 40 "using the current detection circuit" because, as explained previously, detection circuit 29/30 ("current detection circuit") detects data that is transmitted from a power receiving device 40 by "detecting a load state by current detection." (*See supra* §IX.A.1.d; Ex. 1005, 7:50-8:5, 28:18-29.) Such communications include "communication condition information" or the "start frame" sent during the setup stage, where *Sogabe* discloses that either communication ("first communication") from the power receiver to the transmitter can utilize such current detection-based data transfers during the setup stage. (*See supra* §IX.A.1.f; Ex. 1005, 14:61-67, 28:11-29.) These communications are also received by the microcontroller of the *Sogabe-Azancot* system through the detection circuit 29/30 ("using the current detection circuit") in order for the microcontroller

to regulate power output, etc. based on the messages ("[microcontroller configured for] receiving, using the current detection circuit,…"). (§IX.A.1.e-f; Ex. 1005, 7:34-45, 7:50-8:6, 22:58-23:5, 28:17-29, FIGs. 2, 9, 14A; Ex. 1006, FIGs. 2B, 2D; Ex. 1002, ¶135.) Because the communication is sent during the setup stage, it is "based on the first protocol," which, as discussed above in Section IX.A.1(f), uses the initial communication conditions.

A POSITA would have had the skills and rationale in light of the teachings/suggestions of *Sogabe* and *Azancot*, and considering such a skilled person's state of art knowledge, to implement such features while considering design tradeoffs and techniques/technologies with a reasonable expectation of success, especially given such modification would have involved known technologies/techniques as explained, foreseeably resulting in a system having a microcontroller operating in a first mode of operation like that claimed in this claim element (and below), consistent with the teachings and suggestions of *Sogabe* and *Azancot.* (*See* §§IX.A.1.a-f; §§IX.1.h-p; Ex. 1002, ¶136.)

h) 1(h)/24(h): regulating power delivered to the battery of the electronic device in response to the received first communication; and

Sogabe in view of *Azancot* discloses and/or suggests this limitation. (Ex. 1002, ¶¶137-138.) As discussed above, the received first communication includes the "communication condition information" that includes information regarding

how power transfer is to be performed once normal power transfer begins. (§IX.A.1.e-g; Ex. 1005, 10:45-11:16.) In response to the received information, the controller (*e.g.*, microcontroller of the *Sogabe-Azancot* system) regulates power delivered to battery 94 of the power receiving device 40 because the power transmission device 10 begins to output power with a VF driving-voltage at an f1 driving frequency that charges battery 94 based on the communication condition information (*e.g.*, suitable for 0.5 watts or 15 watts). (*Id*., 8:28-36, 10:45-11:16, 15:34-50, 16:24-27, FIGs. 2, 9; *see supra* §IX.A.1.e-f.) In addition, power transmission device 10 begins the output power based on "[i]f the start frame is transmitted," such that the controller similarly regulates power delivered to battery 94 of the power receiving device in response to the start frame message. (Ex. 1005, 8:28-36, 10:45-11:16, 15:34-50, 16:24-27, 26:3-25; *see supra* §IX.A.1.e-f.) The microcontroller of the *Sogabe-Azancot* system facilitates the power regulation. (Ex. 1005, 7:34-45; Ex. 1002, ¶137; *supra* §IX.A.1.e-f.)

For similar reasons, the power receiving device 40 also regulates power delivered to its battery 94 in response to the first communications discussed above because power receiving device 40 "regulate[s] so as to generate a power supply voltage…to charge…battery 94" when the communication condition information or start frame adjusts the power that is output by the power transmission device. (Ex. 1005, 8:28-36, FIGs. 2, 9, 11, 12; Ex. 1002, ¶138.)

i) **1(i): operating in a second mode of operation using a second protocol, wherein the second protocol is an inductive charging communication-and-control protocol that defines bi-directional messaging, wherein the second mode of operation comprises:**

24(i): operating in a second mode of operation using a second protocol, wherein the second protocol is an inductive charging communication-and-control protocol that comprises bi-directional messaging, wherein the second mode of operation comprises:

Sogabe in view of *Azancot* discloses and/or suggests this limitation. (Ex. 1002, ¶¶139-145.) Section IX.A.1(f) demonstrates how *Sogabe* discloses a two-stage charging operation. The first stage corresponding to the setup stage and the second stage corresponding to normal power transmission, where the information sent by the receiving device during the setup stage is used to control power transmission and communication during the normal power transmission stage. (*Supra* §IX.A.1.f; Ex. 1005, 3:54-4:65, 9:7-15, 10:38-54; Ex. 1002, ¶139.)

Accordingly, *Sogabe* discloses operating in a normal power transmission mode ("second mode of operation") that includes either (1) the normal power operation mode by itself, or (2) the normal operation mode and the setup stage that constitutes the "first mode of operation." (Ex. 1002, ¶140.) The second operation mode including the first operation mode is consistent with claim 5 of the '777 patent, which states that "the first mode of operation ***is a subset*** of the second mode of operation." (Ex. 1001, 71:11-12 (claim 5).)

A POSITA would have had similar reasons, motivations, and expectation of success explained above for claim element 1/24(e) regarding implementing and configuring a "microcontroller" in the modified *Sogabe* system for configuring the features discussed here and below regarding the second mode of operation (*see infra* claim elements (i)-(n)). Thus, for the same reasons explained, and those respectively here, and below for associated "second mode" claim elements, a POSITA would have been motivated to configure the "microcontroller" in the modified *Sogabe* system/device to operate in the "second mode of operation" as claimed in claims 1/24. (Ex. 1002, ¶141.)

The communication method used in the normal power transmission mode is determined based on the communication condition received during the setup stage. (Ex. 1005, 9:16-64, 11:33-55, 12:14-37.) *Sogabe* discloses that the transfer of information from the receiving device to the transmitting device is performed "under the initial communication condition before the start of normal power operation" ("first protocol") whereas "communication after the start of normal power transmission can be performed by using the communication condition" ("second protocol"). (*Id.*, 11:56-12:13.) For example, as *Sogabe* explains, the communication condition defines how the power transmission device 10 communicates with the PRD40 during normal power transmission. (*Id.*, 9:38-61, 10:6-17, 16:30-36.) (Ex. 1002, ¶142.)

Sogabe also discloses that communication during the normal power transmission "comprises" and "defines" "bi-directional messaging." (Ex. 1002, ¶143.) Namely, in the normal power mode "[t]he communication processing sections 36 and 66" of the power transmission device 10 and power receiving device 40 "perform….a processing transmitting data to the power receiving device 40 from the power transmission device 10, and another processing transmitting data to the power transmission device 10 from the power receiving device 40." (Ex. 1005, 10:6-17, FIG. 5.) These bi-directional data messages are transmitted in accordance with the normal communication condition and such messages are illustrated below in figure 5B. (*Id.*, 10:6-17, 11:56-61, 16:30-36, 21:6-12, 24:17-23.)

FIG. 5B

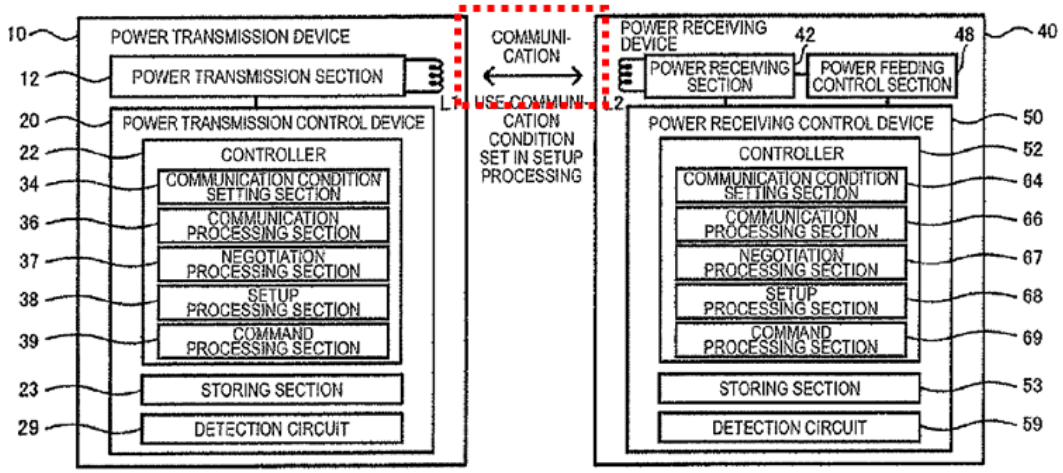

(*Id.*, FIG. 5B (illustrating bi-directional messaging during normal operation).)

As explained, the *Sogabe-Azancot* system includes a microcontroller that controls the operation of the power transmission device 10. (*See supra* §IX.A.1.e;

Ex. 1005, 7:34-45, FIGs. 2, 9.) Given that a microcontroller of the *Sogabe-Azancot* system controls and operates the power transmission device, *Sogabe* in view of *Azancot* discloses and/or further suggests the microcontroller "operating in a second mode of operation using a second protocol" as claimed for the reasons discussed immediately above. (Ex. 1002, ¶144.)

Moreover, a POSITA would have had the skills and rationale in light of the teachings/suggestions of *Sogabe* and *Azancot*, and considering the context of a POSITA's state of art knowledge, to implement such features while considering design tradeoffs and techniques/technologies with a reasonable expectation of success, especially given such modification would have involved known technologies/techniques as explained, foreseeably resulting in a system having a microcontroller operating in a second mode of operation like that claimed in this claim element (and below), consistent with the teachings and suggestions of *Sogabe* and *Azancot.* (Ex. 1002, ¶145.)

j) 1(j)/24(j): receiving, using the current detection circuit, a second communication from the inductive charging receiver of the electronic device, wherein the second communication is based on the second protocol;

Sogabe in view of *Azancot* discloses and/or suggests this limitation. (Ex. 1002, ¶¶146-153.) *Sogabe* discloses "receiving" communications from the power receiving device 40 (*e.g.*, "inductive charging receiver of the electronic device")

"using the current detection circuit" because, as explained previously, detection circuit 29/30 ("current detection circuit") detects data that is transmitted from a power receiving device 40 by "detecting a load state by current detection." (*See supra* §IX.A.1.d; Ex. 1005, 7:50-8:5, 28:18-29.)

Such communications ("second communication") include, for example, a "full charge detection" command, an "interrupt request" sent from the power receiving device to the power transmission device, and a "periodic authentication" performed by the power receiving device as disclosed by *Sogabe*. (Ex. 1005, 3:4-16, 9:62-10:5, 26:23-43, 13:52-58, 17:3-47; 19:55-59, 19:60-20:4.) *Sogabe* further discloses that these communications from the power receiver to the transmitter during the normal communication/transmission condition can be performed using current detection-based data transfers. (*See supra* §IX.A.1.i; Ex. 1005, 2:59-3:3, 16:30-36, 19:20-32, 23:55-59, 28:11-29; Ex. 1002, ¶147.)

In addition, a POSITA would have found it obvious, in view of *Azancot* and the state of the art, to include further communications during normal charging that are provided from the power receiving device to the power transmission device that inform the power transmission device as to the power requirements of the power receiving device so that the power transmission device can adapt the characteristics of the power transfer to meet the needs of the receiving device. (Ex. 1002, ¶148.) For example, *Azancot* discloses sending such data regarding the power requirements

of the receiving device (load/battery), where such data includes operating voltage, operating current, and operating temperature, where this data "may be pertinent to regulating efficient power transmission." (Ex. 1006, 7:21-29, 8:44-57.) *Azancot* further discloses that such data that is sent from the power receiving device to the power transmission device during active power transfer (during operation of the load) can be used to regulate the power supply that provides the power to the primary coil L_1 of the power transmission device. (*Id*., 10:20-25.)

A POSITA would have been motivated to include such power requirement data in communications from the power receiving device to the power transmission device in a system like that of *Sogabe* in order to provide efficient power transfer as disclosed by *Azancot*. (*Id*., 2:29-35, 7:21-29; Ex. 1002, ¶149.) Such a POSITA would also have been motivated to send communications regarding temperature to, for example, prevent overheating of the receiving device during charging. (Ex. 1006, 11:48-51; Ex. 1002, ¶149.) The communication of such data in the *Sogabe-Azancot* combination would have been according to the second protocol since it is done during normal power transmission corresponding to when the battery is being charged. Moreover, a POSITA would have found it obvious to use the established load state current detection signaling method of *Sogabe*, which is consistent with that of *Azancot*, in order to deliver this information from the receiver device to the transmission device. (Ex. 1002, ¶150.) Indeed, such a combination is nothing more

than the application of a known technique (sending data regarding power receiving device charging state/requirements) in a similar system (*Sogabe*'s power transfer system) to achieve a predictable result (power transfer system with improved efficiency and lower risk of overheating). Based on *Azancot's* disclosure of sending such information and the teachings of both *Azancot* and *Sogabe* regarding how to transfer such information in a power transfer system, a POSITA would have had a reasonable expectation of success. (Ex. 1002, ¶150.)

Per the combination, such communications are received by the microcontroller of the *Sogabe-Azancot* system through the detection circuit 29/30 ("current detection circuit") in order for the microcontroller to regulate power output, etc. based on the messages. (§IX.A.1.e-f; Ex. 1005, 7:34-45, 7:50-8:6, 22:58-23:5, 28:17-29, FIGs. 2, 9, 14A; Ex. 1002, ¶151.)

The *Sogabe-Azancot* combination further discloses and/or suggests "wherein the second communication is based on the second protocol." (Ex. 1002, ¶¶152-153.) Because the communication is sent during the normal power transfer stage, it is "based on the second protocol," which, as discussed above in Section IX.A.1(i), is the communication method used for normal power transmission that is determined based on the communication condition received during the setup stage. (*See supra* §IX.A.1.i; Ex. 1005, 17:25-30.)

A POSITA would have had the skills and rationale in light of the teachings/suggestions of *Sogabe-Azancot* (and state-of-art knowledge) to implement such modifications while considering design tradeoffs/techniques/technologies with a reasonable expectation of success for reasons explains. (*See* Ex.1002, ¶153; §§IX.A.1.a-f; §§IX.1.h-p.)

k) 1(k)/24(l): transmitting, by modulating the operating frequency with the coil drive circuit, a frequency-modulated third communication to the inductive charging receiver of the electronic device, wherein the frequency-modulated third communication is based on the second protocol; [and][10]

Sogabe in view of *Azancot* discloses and/or suggests this limitation. (Ex. 1002, ¶¶154-158.) *Sogabe* in view of *Azancot* discloses "transmitting…a frequency-modulated third communication to the inductive charging receiver of the electronic device." (Ex. 1002, ¶154.) For instance, *Sogabe* discloses that "data communication from the power transmission side to the power receiving side is realized by a frequency modulation." (Ex. 1005, 23:55-59; *see also id.*, 8:59-64, 9:47-56, 10:18-27, 12:20-25; Ex. 1002, ¶154.) The frequency modulation occurs by the power transmission device changing the frequency of the output power to communicate data. (Ex. 1005, 9:51-56, 10:18-27, 23:60-24:3, FIG. 10A.) Moreover, frequency

[10] Limitations 1(k)-1(l) are swapped in claim 24 (*i.e.*, 24(l) tracks 1(k); 24(k) tracks 1(l)).

modulation is used to transmit signals in the normal power transmission mode in accordance with communication conditions specifying frequency modulation communication that can be set during the setup stage. (*Id.*, 8:58-62, 9:38-56, 10:6-27, 23:60-24:3, 24:18-23; Ex. 1002, ¶154.)

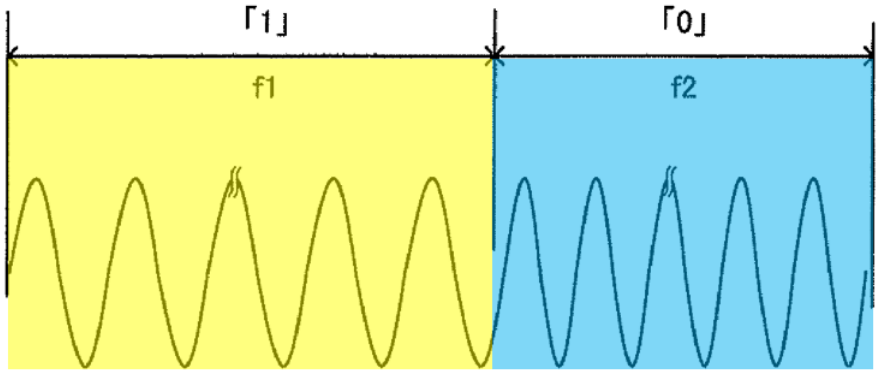

FIG.10A

(Ex. 1005, FIG. 10A (annotated) (illustrating an example of a frequency-modulated signal that is sent to power receiving device 40).)

Given that a detection circuit 59 of the power receiving control device 50 of the inductive charging receiver (or another component thereof) "detects data transmitted from the power transmission device 10" (Ex. 1005, 8:58-62, 23:60-24:3, FIGs. 2, 9; *supra* §IX.A.1.i; Ex. 1002, ¶155), any of the frequency-modulated signals that are sent to the power receiving device 40 from the power transmission device 10 (data, interruption requests, etc.) during the normal power transfer stage are a

"third communication to the inductive charging receiver of the electronic device." (Ex. 1005, 10:6-17, 17:3-5, FIG. 5B).

The *Sogabe-Azancot* combination discloses or suggests that, in the second mode of operation, the third communication is transmitted "by modulating the operating frequency with the coil drive circuit." (Ex. 1002, ¶156.) For instance, *Sogabe* further discloses that the controller 22 "performs…frequency modulation" of the output power and sets frequencies to transmit the communications (Ex. 1005, 7:38-45, 22:8-11, 22:28-37, 23:60-24:3, FIG. 10A), wherein the controller 22 is implemented with a microcontroller per the combination (*see supra* §IX.A.1.e). The power transmission section 12 ("coil drive circuit"), being controlled by the microcontroller of the *Sogabe-Azancot* system, outputs the data and interruption requests, etc. ("third communication") via a frequency-modulated AC voltage. (Ex. 1005, 6:65-7:14, 7:38-45, 22:8-11, 22:28-37, 23:60-24:3, FIG. 10A; *see supra* §IX.A.1.c; Ex. 1002, ¶156.)

Because the third communication is sent during the normal power transfer stage, it is "based on the second protocol," which, as discussed above in Section IX.A.1(i), is the communication method used for normal power transmission that is determined based on the communication condition received during the setup stage, which may include the frequencies used to encode the data sent from the power

transmitter to the power receiver. (*See supra* §IX.A.1.i; Ex. 1005, 8:58-62, 10:6-27, 11:56-61, 16:30-36, 24:17-23, FIG. 10A; Ex. 1002, ¶157.)

A POSITA would have had the skills and rationale in light of the teachings/suggestions of *Sogabe* and *Azancot*, especially in the context of such a skilled person's state of art knowledge, to implement the above-modification while considering design tradeoffs and techniques/technologies with a reasonable expectation of success. Such a modification would have involved known technologies/techniques foreseeably resulting in the system having a microcontroller configured to operate in a "second mode of operation" (§IX.A.1.i) to transmit, using the coil drive circuit (IX.A.1.c), a frequency-modulated third communication based on the second protocol, consistent with the teachings and suggestions of *Sogabe* and *Azancot.* (Ex. 1002, ¶158.)

l) 1(l)/24(k): regulating power delivered to the battery of the electronic device in response to the received second communication; [and]

Sogabe in view of *Azancot* discloses and/or suggests this limitation. (Ex. 1002, ¶¶159-163.) As discussed above in §IX.A.1.j, the "received second communication" includes, for example, a "full charge detection" command, an "interrupt request" sent from the power receiving device to the power transmission device, a "periodic authentication" performed by the power receiving device, and a communication during normal charging that informs the power transmission device

as to the power requirements of the power receiving device. (*Supra* §IX.A.1.j, Ex. 1005, 3:4-16, 9:62-10:5, 26:23-43, 13:52-58, 17:3-47; 19:55-59, 19:60-20:4.)

Sogabe discloses that in response to an "full charge detection command," the microcontroller of the *Sogabe-Azancot* system regulates power delivered to battery 94 of the power receiving device 40 by stopping power transmission by the power transmission device 10 such that battery 94 is no longer charged. (Ex. 1005, 19:55-59, 26:54-57, FIG. 12, S70, S52, FIGs. 2, 9; Ex. 1002, ¶160.)

In response to the "interrupt request" sent by the power receiver device, the microcontroller of the *Sogabe-Azancot* system regulates power delivered to battery 94 by shifting to a communication mode that uses a temporary power transmission level where the driving frequency and driving voltage applied to the coil are set to a lower level such that priority is given to the reliability of communication during the interrupt as opposed to the transmission efficiency of the power transmission. (*Id*., 17:3-47; Ex. 1002, ¶161.)

In response to the "periodic authentication" performed by the power receiving device, the microcontroller of the *Sogabe-Azancot* system regulates power delivered to battery 94 maintaining the transmission of power when the periodic authentication is received, whereas absent receipt of the authentication, power transmission is stopped. (*Id*., 26:23-43, FIG. 12, S66, S47 (stop power transmission when periodic authentication is not OK); Ex. 1002, ¶162.)

In response to the communication of data regarding receiving device power requirements (load voltage, load current, temperature, etc.), the microcontroller of the *Sogabe-Azancot* system regulates power delivered to battery 94 by having the microcontroller adapt the frequency/voltage applied to the coils to meet these requirements or avoid overheating. (*Supra* §IX.A.1.j; Ex. 1006, 2:29-35, 10:20-25, 11:48-51; Ex. 1002, ¶163.)

m) <u>1(m)</u>: wherein the first mode of operation is associated with a first power level and the second mode of operation is associated with a second power level, and

n) <u>1(n)</u>: wherein the first power level and the second power level are different.

The *Sogabe-Azancot* combination discloses and/or suggests these limitations. (Ex. 1002, ¶¶164-165.) As discussed above for claim elements 1(f) and 1(i), the first mode of operation corresponds to the setup stage, whereas the second mode of operation is the normal transmission mode or a combination of the setup stage and the normal transmission mode. (*See supra* §§IX.A.1.f, IX.A.1.i.) The setup stage ("first mode of operation") is associated with a "low power" level, whereas during normal power transmission, power is transmitted at the level corresponding to the power receiving device. (Ex. 1005, 11:56-12:13, 14:36-51, 16:14-29, 17:18-47, FIGs. 3A, 5A; Ex. 1002, ¶¶164-165.) Therefore, the first mode of operation is associated with the "low power" level ("first power level) corresponding to setup, whereas the second mode of operation is associated at least with the power level for

normal power transmission appropriate for the power receiving device ("second power level").

The *Sogabe-Azancot* combination discloses and/or suggests limitation 1(n) for the reasons discussed above, where the "low power" level and the power level during normal power transmission are different. (Ex. 1002, ¶¶164-165.)

o) **24(m): wherein the operating frequency for the first mode of operation is associated with a first frequency range and the operating frequency for the second mode of operation is associated with a second frequency range, and**

p) **24(n): wherein the first frequency range and the second frequency range are different.**

The *Sogabe-Azancot* combination discloses and/or suggests these limitations. (Ex. 1002, ¶¶166-167.) As explained for claim elements 24(f) and 24(i), the first mode of operation corresponds to the setup stage, whereas the second mode of operation is the normal transmission mode or a combination of the setup stage and the normal transmission mode. (*See supra* §§IX.A.1.f, IX.A.1.i.) The setup stage ("first mode of operation") uses an initial "f01" or "f02" operating frequency for the output power, whereas during normal power transmission, the operating frequency is an "f1" or "f2" frequency. (Ex. 1005, 10:18-27, 14:41-67, 15:34-50, 21:7-12, 23:60-24:3, FIG. 10A; Ex. 1002, ¶¶166-167.) Accordingly, the first mode of operation is associated with a first frequency range corresponding to f01 and f02 used during setup, where the second mode of operation is associated at least with the

second frequency range corresponding to f1 and f2 used during normal power transfer.

The *Sogabe-Azancot* combination discloses and/or suggests limitation 24(n) for the reasons discussed above, where first frequency range corresponding to f01 and f02 and the second frequency range corresponding to f1 and f2 are different. (Ex. 1002, ¶¶166-167.)

2. Claim 2

a) The base system of claim 1, wherein the base system is configured to communicate with different types of inductive charging receivers using different inductive charging protocols.

The *Sogabe-Azancot* combination discloses and/or suggests this limitation. (Ex. 1002, ¶¶168-169.) For instance, *Sogabe* discloses that the apparatus including PTD10, or PTD10 itself ("base system") (*see supra* §IX.A.1.a; Ex. 1005, FIGs. 2, 9) can communicate with "various types of power receiving devices" ("different types of inductive charging receivers") using different "communication condition[s]" to charge the devices via contactless power transmission. (Ex. 1005, 9:15-31; *see also id.*, 10:39-11:16 (PTD can communicate with and charge different "kinds of power receiving devices"), FIGs. 1, 2, 9.) The communication condition may specify a modulating power output frequency (*e.g.*, f1, f2) used for communication using frequency modulation or may specify thresholds used for communication using load modulation when the power transmission device of the PTD10 communicates with

a power receiving device, where the configurability of these parameters corresponds to the base system being configured to communicate with different types of inductive charging receivers using different inductive charging protocols. (*Id.*, 9:38-61, 13:41-51, 15:32-50, 16:14-29; *see also id.*, 10:39-11:16, FIGs. 1, 2, 9, 12; Ex. 1002, ¶¶168-169.)

3. Claim 3

a) The base system of claim 1, wherein the electronic device is a mobile device, watch, headset, robot, vehicle, appliance, light or battery.

The *Sogabe-Azancot* combination discloses and/or suggests this limitation, as *Sogabe* discloses that the electronic device may be a cell phone, etc. (*See* §IX.A.1(a); Ex. 1005, 5:60-65, FIGs. 1, 2, 9; Ex. 1002, ¶170.)

4. Claim 5

a) The base system of claim 1, wherein the first mode of operation is a subset of the second mode of operation.

The *Sogabe-Azancot* combination discloses and/or suggests this limitation. (Ex. 1002, ¶171.) As discussed above in §IX.A.1.i, *Sogabe* discloses operating in a normal power transmission mode, where the claimed "second mode of operation" includes either (1) the normal power operation mode either by itself, or (2) the normal operation mode and the setup stage that constitutes the "first mode of operation." (*See supra* §§IX.A.1.i.) When the "second mode of operation" includes the normal operation mode and the "first mode of operation," "the first mode of

operation is a subset of the second mode of operation" as claimed. (*Id*.; Ex. 1002, ¶171.)

5. Claim 6

a) The base system of claim 1, wherein one of the first mode of operation and the second mode of operation is a proprietary mode of operation.

Sogabe in view of *Azancot* discloses and/or suggests this limitation for at least two reasons. (Ex. 1002, ¶¶172-175.) First, *Sogabe*'s setup power transmission mode and normal power transmission mode, which may be the first or second modes of operation, are uniquely provided to increase compatibility with other contactless power systems as proprietary power modes. (*See supra* §§IX.A.1.f, IX.A.1.i; Ex. 1005, 30:5-32:57, FIGs. 3A-5C, 11-12; Ex. 1002, ¶173.) Second, *Sogabe*'s first and/or second modes of operation did not comprise then-standard modes of operation and therefore correspond to proprietary modes of operation in a manner consistent with the disclosure of the '777 patent. (*See supra* §§IX.A.1.f, IX.A.1.i; Ex. 1005, FIGs. 3A-5C, 11-12; Ex. 1002, ¶¶174-175.) *Sogabe*'s modes of operation being "proprietary" is consistent with proprietary modes of operation in the '777 patent and the state-of-the-art, which disclose that a "proprietary" mode of operation may include a mode that did not use then-standard modes of operation. (Ex. 1001, 56:55-60 (distinguishing Bluetooth and other standard protocols from "proprietary" protocols); *see, e.g.*, Ex. 1007, 4:18-25 (distinguishing "proprietary" protocols from

then-standard protocols such as Bluetooth).) As such, for similar reasons here and above, the *Sogabe-Azancot* device/system would have provided similar features. (Ex. 1002, ¶175; §IX.A.1.)

6. Claim 9

a) The base system of claim 1, wherein the microcontroller is further configured for detecting the presence of a foreign object between the inductive charger of the base system and the inductive charging receiver of the electronic device, wherein the determination is made based on a difference between a measured input power to the inductive charger and a received output power at the inductive charging receiver of the electronic device.

Sogabe in view of *Azancot* discloses and/or suggests this limitation. (Ex. 1002, ¶¶176-185.)

Sogabe in view of *Azancot* discloses and/or suggests "wherein the microcontroller is further configured for detecting the presence of a foreign object between the inductive charger of the base system and the inductive charging receiver of the electronic device." (Ex. 1002, ¶¶177.) Per the *Sogabe-Azancot* combination discussed for claim 1, the *Sogabe* system would have been modified such that controller 22 is implemented using a microcontroller like that disclosed by *Azancot.* (*See supra* §IX.A.1.e.) The microcontroller of the *Sogabe-Azancot* system would have thus been configured to control PTD10, including power output. (*Id.*; Ex. 1005, 7:34-45 ("The controller 22 controls power transmission."), 6:41-44.) *Sogabe*

further discloses that PTD10 is configured to "detect[] whether or not a foreign object is inserted between the primary coil L1 and the secondary coil L2" and cut off power if a foreign object is detected. (Ex. 1005, 15:11-18, 7:34-45; §IX.A.1.e; Ex. 1002, ¶177.) That is, the microcontroller of the modified system (which controls power output) would have been configured to stop power transmission when a foreign object is detected between the PTD10 ("base system") and the secondary coil L2 of the inductive charging receiver of PRD40. (Ex. 1005, 15:11-18, 7:34-35, 25:26-29, 26:34-43; §IX.A.1.e; Ex. 1002, ¶178.)

Although *Sogabe* does not explicitly disclose "wherein the determination is made based on a difference between a measured input power to the inductive charger and a received output power at the inductive charging receiver of the electronic device," it would have been obvious to implement such features in view of *Azancot*. (Ex. 1002, ¶179.)

Similar to *Sogabe*, *Azancot* discloses "detecting the presence of a foreign object between the inductive charger of the base system and the inductive charging receiver of the electronic device." (Ex. 1002, ¶180.) For instance, *Azancot* discloses detecting when a "conductive sheet of metallic foil 5800" ("foreign object") hazard "is introduced between [a] primary coil 5220" of a wireless power base system "and the secondary coil 5260" of an inductive charging receiver of an electronic device 5290. (Ex. 1006, 13:38-58, 14:58-15:3, 13:54-58, FIG. 6b; *see supra* §IX.A.1.e.)

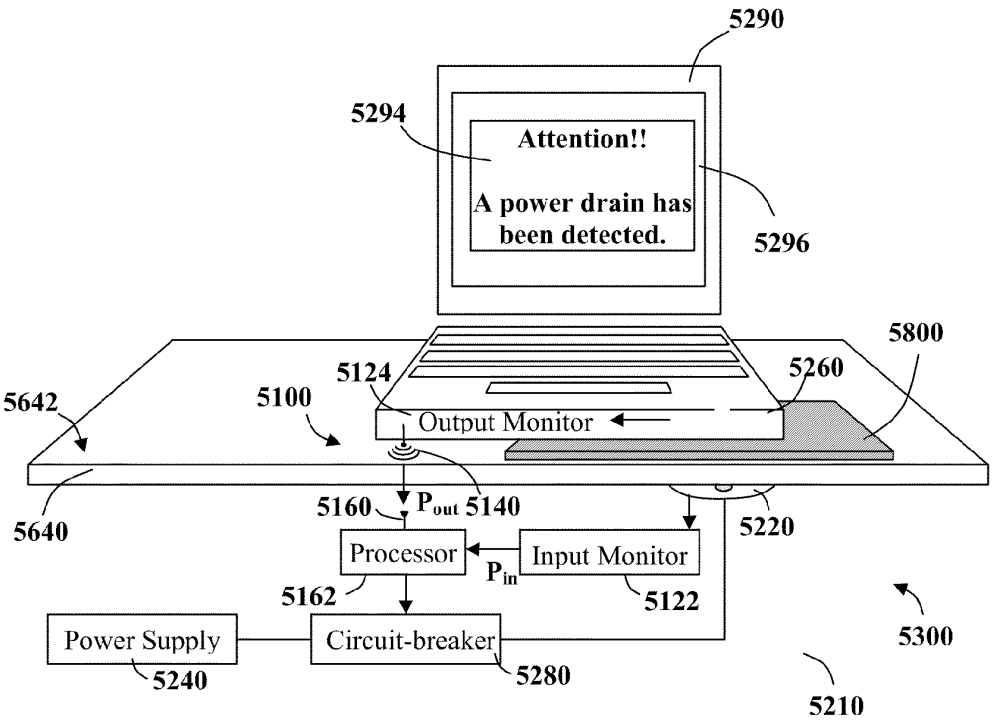

Fig. 6b

(*Id.*, FIG. 6b.)

Azancot further discloses "wherein the determination is made based on a difference between a measured input power to the inductive charger and a received output power at the inductive charging receiver of the electronic device." (Ex. 1002, ¶181.) For instance, *Azancot* discloses that a processor of the wireless power base system receives a P_{OUT} value from an output monitor 5124 of electronic device 5290 and a measured input power P_{IN} from input monitor 5122. (Ex. 1006, 13:65-14:3, 14:48-57, 15:6-11, 15:44-60, FIG. 6b; §IX.A.1.e.) When the efficiency differential Δ (which is "the difference between P_{OUT} and P_{IN}") is above a threshold, the system

detects that the conductive sheet 5800 hazard is between the wireless power base system and the electronic device 5290 and disconnects the primary coil from the power supply to prevent power leakage. (Ex. 1006, 13:27-29, 13:65-14:3, 14:48-57, 15:6-11, 15:44-60, FIGs. 6b, 7.)

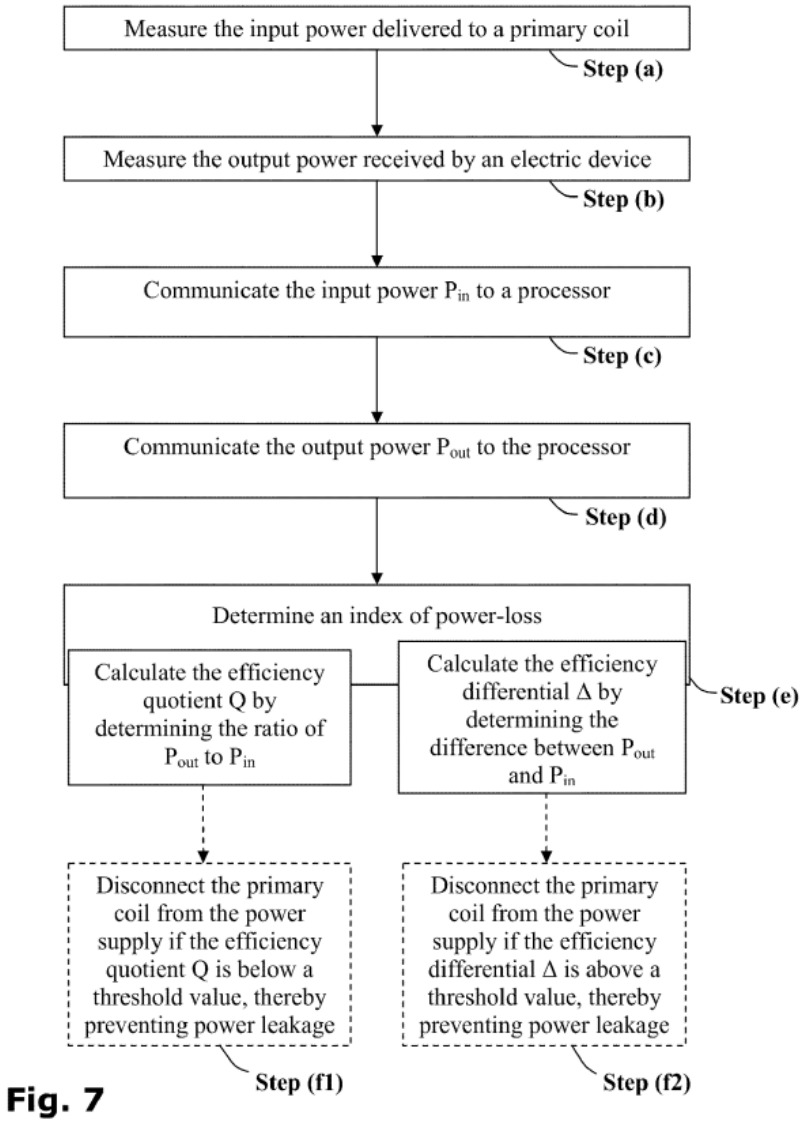

Fig. 7

(*Id.*, FIG. 7.)

In light of such teachings/suggestions, and further to the reasons explained for claim 1 (§IX.A.1), a POSITA would have been motivated and found it obvious to configure the "microcontroller" in the *Sogabe-Azancot* device/system to provide similar functionalities, such that *Sogabe*'s foreign object "determination" features were "based on a difference between a measured input power to the inductive charger and a received output power at the inductive charging receiver of the electronic device," similar to that disclosed by *Azancot*. (Ex. 1002, ¶182.) A POSITA would have recognized that there was a known problem with foreign objects interfering with wireless power systems, that *Azancot*'s teachings address such issues, and that combining the teachings of *Sogabe* and *Azancot* was within the skill/capability of an ordinary artisan, and thus obvious. *See Intel Corp. v. PACT XPP Schweiz AG*, 61 F.4th 1373, 1381 (Fed. Cir. 2023). Per the combination, the microcontroller of the modified *Sogabe* system would perform the detection and power control, as discussed. (§IX.A.1.e; Ex. 1005, 7:34-45; Ex. 1006, 15:34-43 (power monitoring features are applicable to the FIG. 2 embodiment); Ex. 1002, ¶182.)

A POSITA would have been motivated to modify the *Sogabe* system in view of *Azancot*'s teachings regarding power difference control to prevent power leakage in the system efficiently. (Ex. 1006, 2:53-58, 15:44-61; Ex. 1002, ¶¶182-184.) A POSITA also would have appreciated that configuring the modified system with

features similar to *Azancot*'s hazard detection system would have improved the modified *Sogabe* system by minimizing/eliminating a need to vary the load on the power receiving side during a periodic authentication state to detect a foreign object. (Ex. 1006, 2:53-58, 15:44-61; Ex. 1005, 29:14-30; Ex. 1002, ¶¶182-184.) Moreover, a POSITA would have also appreciated that configuring the microcontroller to provide features similar to *Azancot*'s efficiency differential threshold functionalities would have increased the efficiency and usability of the *Sogabe* system by enabling the system to recognize that not all improper or low load conditions would necessitate turning off power flow. (Ex. 1006, 2:53-58, 15:44-61; Ex. 1002, ¶184.)

A POSITA would have had a reasonable expectation of success in implementing such a differential foreign object detection system in the modified *Sogabe* system (§IX.A.1). (Ex. 1002, ¶185.) For instance, *Sogabe* describes detecting foreign objects between the base system and the electronic device (Ex. 1005, 15:11-18, 7:34-45), and *Azancot* discloses a beneficial system for detecting hazards based on a difference between a measured input power and a received output power as previously discussed. (*Id.*) The modification would have been a predictable combination of known components according to known methods (*e.g.*, input and output power based hazard detection), and would have produced the predictable result of the microcontroller in the modified system being further configured for detecting the presence of a foreign object between the inductive

charger of the base system and the inductive charging receiver of the electronic device. (*Id.*) *See KSR*, 550 U.S. at 416.

7. Claim 10

a) The base system of claim 1, wherein the base system operates in one of the first mode of operation and the second mode of operation depending on the power output level of the inductive charging receiver.

Sogabe in view of *Azancot* discloses and/or suggests this limitation. (Ex. 1002, ¶¶186-188.) As discussed previously, *Sogabe* discloses an apparatus including PTD10, or PTD10 itself ("base system") (*see supra* §IX.A.1.a; Ex. 1005, FIGs. 2, 9) that operates "in one of the first mode of operation and the second mode of operation" (*see supra* §IX.A.1.f, i (discussing *Sogabe*'s setup power transmission mode and normal power transmission mode as the first and second modes of operation)).

Sogabe discloses that the base system operates in at least one of the first and second modes of operation "depending on the power output level of the inductive charging receiver." (Ex. 1002, ¶187.) For instance, *Sogabe* discloses that the PRD40 or PRS42, PFCS48, and PRCD50 ("inductive charging receiver") of the electronic device (*see* §IX.A.1.a) is "designed for contactless power transmission with 0.5 watts," "15 watts," etc. ("the power output level of the inductive charging receiver") depending on the type of device PRD40 is. (Ex. 1005, 10:38-11:16; *see also id.*, 17:50-60, 21:55-62.) During the setup mode, communication condition

information is exchanged such that the output power of the transmitter for the normal mode is controlled depending on the specific power output level of the inductive charging receiver (*e.g.*, 15W, 0.5W, etc.). (Ex. 1005, 10:38-11:16, 9:25-31, 15:34-50; Ex. 1002, ¶187.) Accordingly, the apparatus including PTD10, or PTD10 itself ("base system") operates in the normal power transmission mode (in at least one of the first and second modes of operation) "depending on the power output level of the inductive charging receiver," as claimed. (*Id.*) This feature is consistent with PO's infringement contentions, which allege that a device that uses "different power levels…for different modes of operation and correspondingly different devices," like that disclosed by *Sogabe* (as explained above and in §§IX.A.1.f, IX.A.1.i), meets this limitation. (Ex. 1025, 77-78.)

Alternatively, *Sogabe* in view of *Azancot* discloses and/or suggests that the base system operates in at least one of the first and second modes of operation "depending on the power output level of the inductive charging receiver" for reasons similar to those explained with respect to claim 9. (§IX.A.6 (discussing how a "P_{OUT}" value from a wireless power receiving electronic device controls whether wireless power is transmitted from a charger); Ex. 1002, ¶188.) In such a configuration, the P_{OUT} value would similarly control power in the setup power transmission mode or the normal power transmission mode. (§§IX.A.1, 6; Ex. 1002, ¶188.)

8. Claim 11

a) The base system of claim 1, wherein the operating frequency for the first mode of operation is within a first frequency range and the operating frequency for the second mode of operation is within a second frequency range, and wherein the first frequency range and the second frequency range are different.

Sogabe in view of *Azancot* discloses and/or suggests this limitation for the reasons discussed *supra* in §§IX.A.1.o-p. (Ex. 1002, ¶189.)

9. Claim 13

a) The base system of claim 1, wherein the received first communication for the first mode of operation and the received second communication for the second mode of operation are different.[11]

Sogabe in view of *Azancot* discloses and/or suggests this limitation. (Ex. 1002, ¶190.) As discussed previously, the first communication is the communication that includes "communication condition information" or a "start frame" sent during the setup stage. (*See supra* §IX.A.1.g.) As also discussed, the second communication may be a "full charge detection" command, an "interrupt request" sent from the power receiving device to the power transmission device, a "periodic authentication" performed by the power receiving device, or a communication during normal charging that informs the power transmission device as to the power

[11] *See supra* n.5.

requirements of the power receiving device. (*See supra* §§IX.A.1.j.) These distinct communications are different in signal structure, function, composition, binary value, encoding, name, etc. (Ex. 1005, 9:7-37, 15:34-56, 17:3-7, 19:55-59, 23:60-24:17; Ex. 1002, ¶190.)

10. Claim 14

a) The base system of claim 1, wherein the frequency range of the power delivered to the battery for the first mode of operation is based on the first protocol and the frequency range of the power delivered to the battery for the second mode of operation is based on the second protocol.

Sogabe in view of *Azancot* discloses and/or suggests this limitation. (Ex. 1002, ¶¶191-192.) As explained, PTD10 outputs power at one or more of the "f01" and "f02" frequencies (frequency range of power delivered) in the setup mode (first mode of operation and first protocol) (§IX.A.1.f) and one or more of the "f1" and "f2" frequencies (frequency range of power delivered) in the normal power transmission mode (second mode of operation and second protocol) (§IX.A.1.i). (*See also* §IX.A.1.c ("coil drive circuit provides [*the*] power"); Ex. 1005, 10:18-27, 14:41-67, 15:34-50, 21:7-12, 23:60-24:3, FIG. 10A; Ex. 1002, ¶¶166-167, 192.) The power transferred by PTD10 to PRD40 is used to charge the battery (*e.g.*, delivered to the battery). (Ex. 1005, 8:13-36; §§IX.A.1.h, IX.A.1.l.) Thus, the *Sogabe-Azancot* combination discloses/suggests the features of claim 14.

Such teachings are consistent with PO's contentions in district court, that allege a charger that "uses different frequency ranges for its different modes of operation" reads on "this dependent claim." (Ex. 1025, 88.) *See Amazon.com, Inc. v. Barnesandnoble.com, Inc.*, 239 F.3d 1343, 1351 (Fed. Cir. 2001) (citation omitted) ("A patent may not, like a 'nose of wax,' be twisted one way to avoid anticipation and another to find infringement."); *See 10X Genomics, Inc. v. Bio-Rad Labs., Inc.*, IPR2020-00086, Paper 8 at 21-22 (PTAB Apr. 27, 2020).

B. Ground 2: Claim 6 is obvious over *Sogabe* in view of *Azancot* and *Walley*

1. Claim 6

a) The base system of claim 1, wherein one of the first mode of operation and the second mode of operation is a proprietary mode of operation.

To the extent the *Sogabe-Azancot* combination does not disclose and/or suggest claim 6 (it does (*see supra* §IX.A.5)), it would have been obvious to configure the *Sogabe-Azancot* system to implement such features in view of *Walley.* (Ex. 1002, ¶¶193-194.) *Walley*, similar to *Sogabe-Azancot*, discloses using a "microprocessor" or "micro-controller" to control a wireless power transmitter (WP TX unit 10) or receiver device that is capable of operating using different protocols, including "standardized protocols" or "proprietary protocols." (§IX.A.1.6; Ex. 1007, 3:47-55, 4:15-55, FIG. 1.)

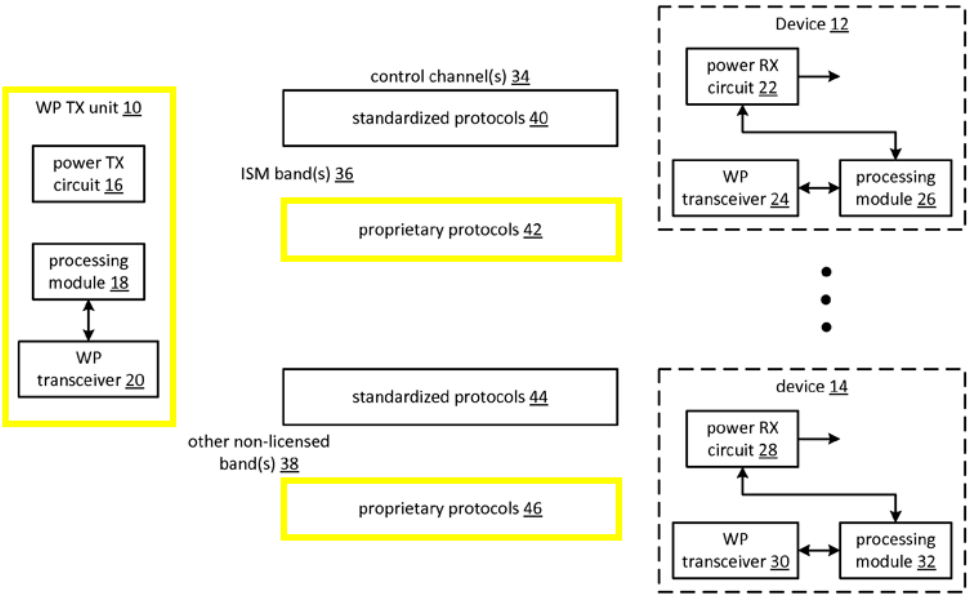

FIG. 1

(Ex. 1007, FIG. 1 (annotated); Ex. 1002, ¶193.)

In view of *Walley*, a POSITA would have been motivated and found obvious to configure the *Sogabe-Azancot* device/system such that the second mode of operation (§IX.A.1.i) comprises one proprietary protocol in order to increase the interoperability and universal features of the *Sogabe-Azancot* system to better work with other known wireless charging systems and receivers using understood proprietary protocols. (Ex. 1007, 1:56-2:15, 3:47-55, 4:15-25, FIG. 1; Ex. 1002, ¶194.) A POSITA would have recognized such modification as a predictable combination of known components/techniques (*e.g.*, wireless power transmitters that are compatible with various proprietary protocols), that would have predictably led to such a system employing one of the first mode of operation and the second

mode of operation being a proprietary mode of operation. (Ex. 1002, ¶194.) *See KSR*, 550 U.S. at 416.

C. Ground 3: Claim 7 is obvious over *Sogabe* in view of *Azancot* and *Baarman*

1. Claim 7

a) The base system of claim 1, wherein the microcontroller is further configured for sending a ping to the electronic device through the inductive charging coil to determine which of the first mode of operation and second mode of operation to use, wherein the determination is made based on the received communication from the inductive charging receiver of the electronic device in response to the ping.[12]

The *Sogabe-Azancot* combination in view of *Baarman* discloses and/or suggests this limitation. (Ex. 1002, ¶¶195-202; *see also* §IX.A.1.) As discussed above for limitations 1(f)-1(i), the *Sogabe-Azancot* combination discloses and/or suggests the PTD10 operating in a setup power transmission mode and a normal power transmission mode, which correspond to first and second power modes. (§§IX.A.1.f, i.)

Although *Sogabe* does not explicitly disclose that the microcontroller sends a ping to PRD40 to determine which of setup or normal power transmission modes to use, this feature would have been obvious in view of *Baarman*. (Ex. 1002, ¶196.)

[12] *See supra* n.5.

Like *Sogabe* and *Azancot*, *Baarman* discloses a "wireless charging system." (Ex. 1008, Title, Abstract, FIG. 1, ¶0030.) *Baarman*'s system includes an inductive power supply 12, which includes a controller 32 ("microcontroller") and a tank circuit 34, which includes the primary coil 16 ("inductive charging coil") that transmits wireless power to remote control 14 ("electronic device"). (*Id.*, ¶¶0030, 0032, FIGs. 1-2A.)

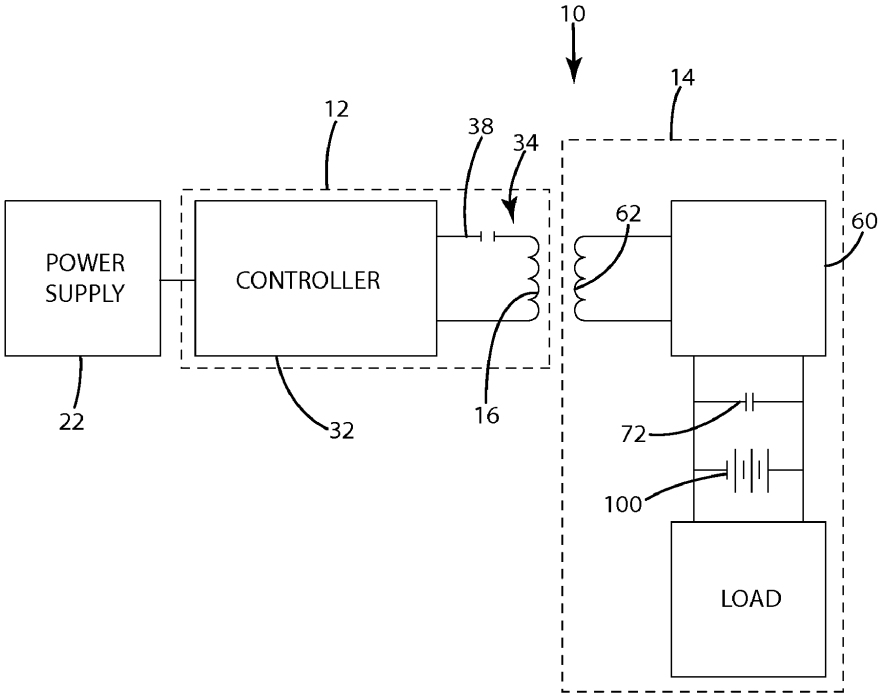

(*Id.*, FIG. 1.) The controller 32 may be a dsPIC30F2023 or similar microcontroller. (*Id.*, FIG. 2A; Ex. 1002, ¶197.)

Baarman discloses "wherein the microcontroller is further configured for sending a ping to the electronic device through the inductive charging coil." (Ex. 1002, ¶198.) For instance, *Baarman* discloses "the inductive power supply enters a

ping state 202 by periodically applying a relatively small amount of power to the tank circuit 34. The amount of power in each ping is typically sufficient to enable a remote control 14 with a depleted battery 100 to generate a feedback signal to identify its presence within the electromagnetic field." (Ex. 1008, ¶0048, FIG. 4.) The controller 32 controls the tank circuit 34 to output the power ping through the primary coil 16 of tank circuit 34. (*Id.*, ¶0032, FIGs. 1, 2A, 2C; Ex. 1002, ¶198.)

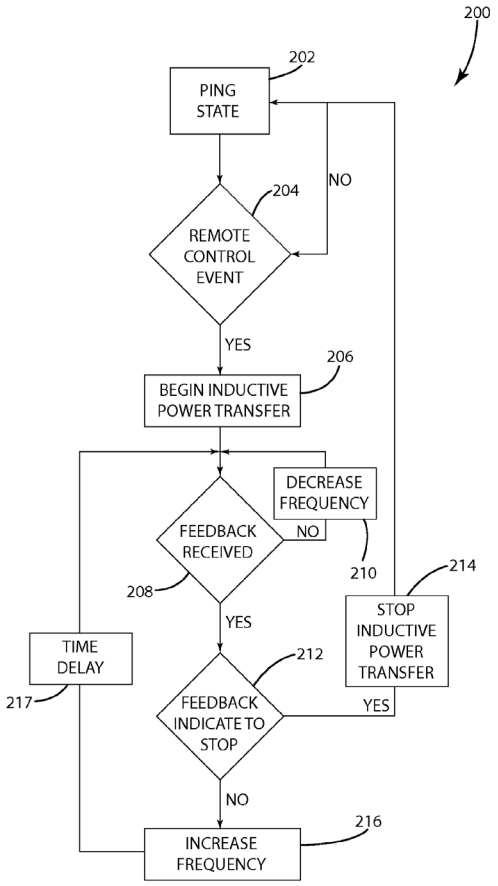

Fig. 4

(Ex. 1008, FIG. 4.)

Baarman discloses that the ping is used "to determine" whether to use a normal power transmission mode "wherein the determination is made based on the received communication from the inductive charging receiver of the electronic device in response to the ping." (Ex. 1002, ¶199.) For instance, *Baarman* discloses that "[t]he inductive power supply 12 monitors the current in the tank circuit 34 for communications from the remote control 14 to determine when a compatible remote control 14 is present 204….When a communication signal indicative of the presence of a compatible remote control 14 is received" ("received communication from the inductive charging receiver of the electronic device in response to the ping"), "the inductive power supply 12 begins inductive power transfer 206 at a specific start frequency." (Ex. 1008, ¶0049, FIG. 4.) That is, the inductive power supply 12 begins a normal power transmission mode without complex setup negotiations when a ping response from an electronic device indicates that a compatible wireless power receiver is available. (*Id.*, ¶¶0048-49, FIGs. 1, 4; Ex. 1002, ¶199.)

Given that the *Sogabe* system as modified by *Azancot* discloses operating in a setup power transmission mode and a normal power transmission mode, which correspond to first and second power modes, and that *Baarman* uses a ping signal to determine whether to enter a normal power transmission mode, it would have been obvious for the microcontroller to send a ping to the electronic device through the inductive charging coil to determine which of the first mode of operation and second

mode of operation to use, wherein the determination is made based on the received communication from the inductive charging receiver of the electronic device in response to the ping. (Ex. 1002, ¶200.) In combination, the microcontroller of the *Sogabe-Azancot* system (*see supra* §IX.A.1.e) would ping the electronic device to see if a compatible device was present and, if receiving a communication signal indicative of the presence of such a known compatible electronic device, begin the normal power transmission mode instead of the setup power transmission mode (as the setup power transmission mode would not be needed to negotiate operating power, etc.). (Ex. 1008, ¶¶0048-49, FIGs. 1, 4; Ex. 1005, FIGs. 2-5C, 9; Ex. 1002, ¶200.)

A POSITA would have had good reason to use the ping and responsive signaling disclosed by *Baarman* as explained, such as to reduce the complexity of the wireless power setup process disclosed by *Sogabe* while still maintaining universal interoperability and compatibility features. (Ex. 1008, ¶¶0048-49, FIGs. 1, 4; Ex. 1005, FIGs. 2-5C, 9, 11-12 (disclosing exemplary details of the negotiation and setup process); Ex. 1002, ¶201.) Determining whether to make use of the *Sogabe* negotiation and setup processes based on whether a compatible device can be determined quickly through pinging also would have decreased low power transmission time in favor of normal power transmission time and optimize charging. (Ex. 1008, ¶¶0048-49, FIGs. 1, 4; Ex. 1005, FIGs. 2-5C, 9; Ex. 1002,

¶201.) Further, using the pinging to recognize compatible devices as explained also would have reduced risks associated with powering an improper device. (Ex. 1008, ¶¶0048-49; Ex. 1005, FIGs. 3A-5C; Ex. 1002, ¶201.) Moreover, *Baarman* discloses that such pinging can reduce the energy consumed by the system when a compatible receiver is not present (Ex. 1008, ¶0048) as other device detection means that transmit more complex signals to locate devices to be charged may require more energy to do so. (Ex. 1002, ¶201.)

A POSITA would have had a reasonable expectation of success in having the microcontroller use the ping and responsive signaling disclosed by *Baarman* as described. (Ex. 1002, ¶202.) Here, the modification would have been a predictable combination of known components according to known methods (*e.g.*, pinging and responsive signaling to begin a normal wireless power transfer mode), and would have produced the predictable result of the microcontroller being further configured for sending a ping to an electronic device through the inductive charging coil to determine which of the first mode of operation and second mode of operation to use, wherein the determination is made based on the received communication from the inductive charging receiver of the electronic device in response to the ping. (Ex. 1002, ¶202.) *See KSR*, 550 U.S. at 416.

D. Ground 4: Claim 8 is obvious over *Sogabe* in view of *Azancot* and *Muratov*

1. Claim 8

a) The base system of claim 1, wherein one of the first mode of operation and the second mode of operation is based on a Wireless Power Consortium standard.

The *Sogabe-Azancot* combination in further view of *Muratov* discloses and/or suggests this limitation. (Ex. 1002, ¶¶203-209; *see also* §IX.A.1.) As discussed in limitations 1(f)-1(i), the *Sogabe-Azancot* combination discloses and/or suggests the PTD10 operating in a setup power transmission mode and a normal power transmission mode, which correspond to first and second power modes. (§§IX.A.1.f, i.)

Although the *Sogabe-Azancot* combination discloses and/or suggests that the first mode comprises uni-directional messaging (§IX.A.1.f.), the modified *Sogabe* system does not explicitly disclose that the first mode of operation is based on the Wireless Power Consortium standard. However, this feature would have been obvious in view of *Muratov* and the state-of-the-art. (Ex. 1002, ¶204.)

The Wireless Power Consortium ("WPC") standard, also known as the Qi standard, was an understood and adopted wireless power control protocol before the alleged time of invention. (Ex. 1002, ¶205; Ex. 1010; Ex. 1011.) Similar to the uni-directional messaging system of the first mode discussed previously (§IX.A.1.f), Qi compliant systems and devices allowed various Power Receivers to control wireless

Power Transmitters via one-way messaging. (Ex. 1010, Cover, 1, 7-9, 51.) As understood before the alleged time of invention, "[t]he aim of the wireless power consortium [was] to enable a wide spread use of wireless power applications." (Ex. 1011, 1.) To this effect, the consortium "defined a standard for providing up to 5W of power to low power mobile devices, like mobile phones, batteries and camera[s]." (*Id.*)

Muratov discloses using the understood and adopted Wireless Power Consortium/Qi standard before the alleged time of invention. (Ex. 1009; Ex. 1002, ¶206.) For instance, *Muratov* discloses "Qi establishes a common language for inductive chargers and devices to talk to one another. So any device with a Qi-enabled accessory or with Qi built directly into it can charge on any Qi inductive charging pad." (Ex. 1009, 2:13-16.) Prior to the Qi standard, two wireless power devices "had to be designed specifically for each other, but devices and chargers designed to support the standard established by the WPC [could] be freely interchanged." (*Id.*, 2:20-26; *see also id.*, 7:6-9.)

It would have been obvious for the setup mode of operation (*see* §§IX.A.1.f, i) of the *Sogabe-Azancot* combination to be "based on a Wireless Power Consortium standard" as disclosed by *Muratov* and understood in the art. (Ex. 1002, ¶207.) In combination, the microcontroller of the *Sogabe-Azancot* system would operate in accordance with the WPC standard during the setup power transmission mode.

(§§IX.A.1.e-f; Ex. 1005, 7:34-45; Ex. 1002, ¶207.) A POSITA would have been motivated to base the setup operation mode off the WPC/Qi standard because, as discussed previously, the WPC/Qi standard allowed wireless devices and systems to be freely interchanged with each other and was becoming popular and accepted before the alleged time of invention. (Ex. 1009, 2:13-26, 7:6-9; Ex. 1010, 1, 7-9; Ex. 1011, 1; Ex. 1002, ¶207.) Moreover, a POSITA would have appreciated that using the WPC/Qi standard for the first or second modes of operation (*see* §§IX.A.1.f, i) would have increased marketability of the system by including a universally accepted wireless power standard/Qi branding. (Ex. 1009, 2:13-26, 7:6-9; Ex. 1010, 1, 7-9; Ex. 1011, 1; Ex. 1002, ¶207.) A POSITA also would have been motivated to implement the WPC/Qi standard for the setup mode (*see* §§IX.A.1.f, i) to increase the interoperability of the system. (Ex. 1011, 1, 7; Ex. 1002, ¶207.)

Given the widespread adoption of the WPC/Qi standard, the modification would have been a predictable combination of known components according to known methods (*e.g.*, implementing the readily available WPC/Qi standard), and would have produced the predictable result of the first mode of operation being based on a Wireless Power Consortium standard. (Ex. 1002, ¶208.) *See KSR*, 550 U.S. at 416. Moreover, the WPC/Qi standard also comprised uni-directional messaging, like that claimed for the first mode of operation. (Ex. 1010, 1, 7-9, 51; Ex. 1011, 6-

7; §IX.A.1.f.) Thus, a POSITA would have had a reasonable expectation of success in basing the first mode of operation on the WPC/Qi standard. (Ex. 1002, ¶209.)

X. DISCRETIONARY DENIAL IS NOT APPROPRIATE

Discretionary denial under §325(d) is not appropriate here given the prior art combinations and arguments raised during prosecution are not the same or substantially similar to the grounds presented herein. The Office did not consider the disclosures of *Sogabe* alone or in light of the teachings of *Azancot*, *Walley*, *Baarman*, and/or *Muratov*. (*See generally* Ex. 1004; Ex. 1001, Cover.) Indeed, the examiner allowed the '777 patent without any substantive analysis of any of the prior art submitted by the applicant. (Ex. 1004, 75-77.) The Office/examiner thus erred in a manner pertinent to the patentability of the challenged claims by summarily allowing the now challenged claims without considering/applying the teachings/suggestions in at least *Sogabe*, or in view of the other prior art cited herein. Indeed, *Sogabe* discloses/suggests many of the features recited in the challenged claims, and thus is relevant to the patentability of those claims, whether alone or in combination with the other asserted prior art herein.

This is true even though *Baarman* and a patent application publication relating to *Azancot* were submitted in IDSs during prosecution of **the parent '369 patent** (*see supra* §IV), the same day over 300 references were submitted. (Ex. 1016, 587-616, 1079-1097.) As with other references submitted during prosecution, the examiner erred in a manner pertinent to the patentability of the challenged claims by failing to consider and apply the teachings of *Baarman* and *Azancot* alone or in

combination with other prior art. As demonstrated in §IX, *Baarman* and *Azancot* disclose and/or suggest features recited certain challenged claim limitations, and thus should have been considered in combination with other pertinent references (like those of *Sogabe*). Thus, the examiner erred in believing at the time that no prior art teaches or suggests the combination of steps or elements in the claims without considering the collective teachings/suggestions in the art (like that discussed in §IX). Had the examiner done so, the challenged claims would have likely not have issued.[13]

Further, the *Fintiv* factors do not justify denying institution. *Apple Inc. v. Fintiv, Inc*., IPR2020-00019, Paper 11 (P.T.A.B. Mar. 20, 2020) (precedential).

The **first factor** (stay) is neutral, because Samsung has not yet moved for a stay. *See Hulu LLC v. SITO Mobile R&D IP, LLC et al.*, IPR2021-00298, Paper 11 at 10-11 (P.T.A.B. May 19, 2021).

The **second factor** (proximity) is neutral. "The PTAB will weigh this factor against exercising discretion to deny institution under *Fintiv* if the median time-to-trial is around the same time or after the projected statutory deadline for the PTAB's final written decision" (FWD). (Ex. 1022, 9.) The median time from filing to trial

[13] Petitioner reserves the right to seek leave to respond to any §325(d) (and §314) arguments that PO may raise in this proceeding to avoid institution.

in the Eastern District of Texas is 19 months, meaning trial will be *no earlier* than May 2024 (Ex. 1023, 35), is consistent with the court's scheduled jury selection for August 5, 2024 (Ex. 1024, 1.) With this petition filed in June 2023, a FWD may be expected by December 2024, not long after the trial date.

That the FWD may come after the trial date is not dispositive. The Board has granted institution in cases where the FWD issued months after the scheduled trial date. The Board has relied on various justifications, such as diligence in filing the petition, a stipulation not to pursue the asserted grounds in litigation, minimal investment in litigation, and the merits of the invalidity challenge were strong. *Verizon Business Network Services, Inc. v. Huawei Techs. Co*., IPR2020-01141, Paper 12 (Jan. 14, 2021). The same factors are present in this case. For instance, Petitioner diligently filed this petition (challenging long, convoluted claims) in advance of the one-year bar date and within four months of PO's infringement contentions in the Texas Litigation. (Exs. 1021, 1025.) Fact discovery is not anticipated to close until March 18, 2024. (Ex. 1024, 3.) Expert discovery has not yet started. (*Id.*) And the *Markman* hearing has been scheduled for February 6, 2024, after the filing of this petition. (*Id.*)

The **third factor** (investment) also weighs against denial. The district court case is in the early stages. Fact discovery is in its infancy and the parties have not

engaged in expert discovery. (Ex. 1024, 3.) The parties have not yet identified terms for construction. (*Id.*, 3-4.) Nor have there been any substantive orders in this case.

The **fourth factor** (overlap) also weighs against denial. Petitioner hereby stipulates that, if the IPR is instituted, Petitioner will not pursue the IPR grounds in the district court litigation. Thus, "[i]nstituting trial here serves overall system efficiency and integrity goals by not duplicating efforts and by resolving materially different patentability issues." *Apple, Inc. v. SEVEN Networks, LLC*, IPR2020-00156, Paper 10 at 19 (P.T.A.B. June 15, 2020); *see also Sand Revolution II, LLC v. Continental Intermodal Group-Trucking LLC*, IPR2019-01393, Paper 24 at 12 (P.T.A.B. June 16, 2020). Nor is there complete overlap between proceedings, as Ground 1 addresses claim 3—not at issue in the Texas litigation—so the litigation will not resolve all disputed validity issues. (§IX.A.3.)

While the **fifth factor** (parties) may weigh slightly in favor of denial, because the Petitioner and PO are the same parties as in district court, based on a "holistic view," the factors favor institution. *Samsung Elecs. Co. Ltd. v. Dynamics Inc.*, IPR2020-00505, Paper 11 at 15 (P.T.A.B. Aug. 12, 2020).

Even if the Board determines that the above factors favor denial, the Board should not discretionarily deny institution, because this petition presents compelling merits. *See Commscope Tech. LLC v. Dali Wireless, Inc.*, IPR2022-01242, Paper 23 at 4-5 (P.T.A.B. Feb. 27, 2023) (precedential). The claimed features regarding

inductive charging coils, drive circuits, current detection circuits, microcontrollers, and universal wireless charging efforts were well-known in the art, and in fact, are largely concepts used in inductive power systems. (§IX) Moreover, this Petition is the ***sole*** challenge to challenged claims before the Board—a "crucial fact" favoring institution. *Google LLC v. Uniloc 2017 LLC*, IPR2020-00115, Paper 10 at 6 (May 12, 2020).

XI. CONCLUSION

Accordingly, Petitioner requests institution of IPR for the challenged claims based on the specified grounds.

Respectfully submitted,

Dated: June 29, 2023

By: /Joseph E. Palys/
Joseph E. Palys (Reg. No. 46,508)
Counsel for Petitioner

CERTIFICATE OF COMPLIANCE

Pursuant to 37 C.F.R. § 42.24(d), the undersigned certifies that the foregoing Petition for *Inter Partes* Review of U.S. Patent No. 11,342,777 contains, as measured by the word-processing system used to prepare this paper, 13,936 words. This word count does not include the items excluded by 37 C.F.R. § 42.24 as not counting towards the word limit.

Respectfully submitted,

Dated: June 29, 2023

By: /Joseph E. Palys/
Joseph E. Palys (Reg. No. 46,508)
Counsel for Petitioner

CERTIFICATE OF SERVICE

I hereby certify that on June 29, 2023, I caused a true and correct copy of the foregoing Petition for *Inter Partes* Review of U.S. Patent No. 11,342,777 and supporting exhibits to be served via express mail on the Patent Owner at the following correspondence address of record as listed on Patent Center:

115007 – NK Patent Law
4101 Lake Boone Trail
Suite 218
Raleigh, NC 27607

By: /Joseph E. Palys/
Joseph E. Palys (Reg. No. 46,508)