US 20110018360A1

(19) United States

(12) Patent Application Publication

(10) Pub. No.: US 2011/0018360 A1

(43) Pub. Date: Jan. 27, 2011

Baarman et al.

(54) POWER SUPPLY

(75) Inventors: **David W. Baarman**, Fennville, MI (US); **William T. Stoner, JR.**, Ada, MI (US); **Hai D. Nguyen**, Grand Rapids, MI (US)

Correspondence Address:
WARNER, NORCROSS & JUDD
IN RE: ALTICOR INC.
INTELLECTUAL PROPERTY GROUP, 111 LYON STREET, N. W. STE 900
GRAND RAPIDS, MI 49503-2489 (US)

(73) Assignee: **ACCESS BUSINESS GROUP INTERNATIONAL LLC**, Ada, MI (US)

(21) Appl. No.: **12/842,421**

(22) Filed: **Jul. 23, 2010**

Related U.S. Application Data

(60) Provisional application No. 61/228,192, filed on Jul. 24, 2009.

Publication Classification

(51) **Int. Cl.**
H02J 17/00 (2006.01)

(52) **U.S. Cl.** **307/104**

(57) **ABSTRACT**

In one aspect, the present invention provides a universal power supply for wired and wireless electronic devices. In a second aspect, the present invention provides a universal power supply that is reconfigurable to provide a wide range of power supply options.

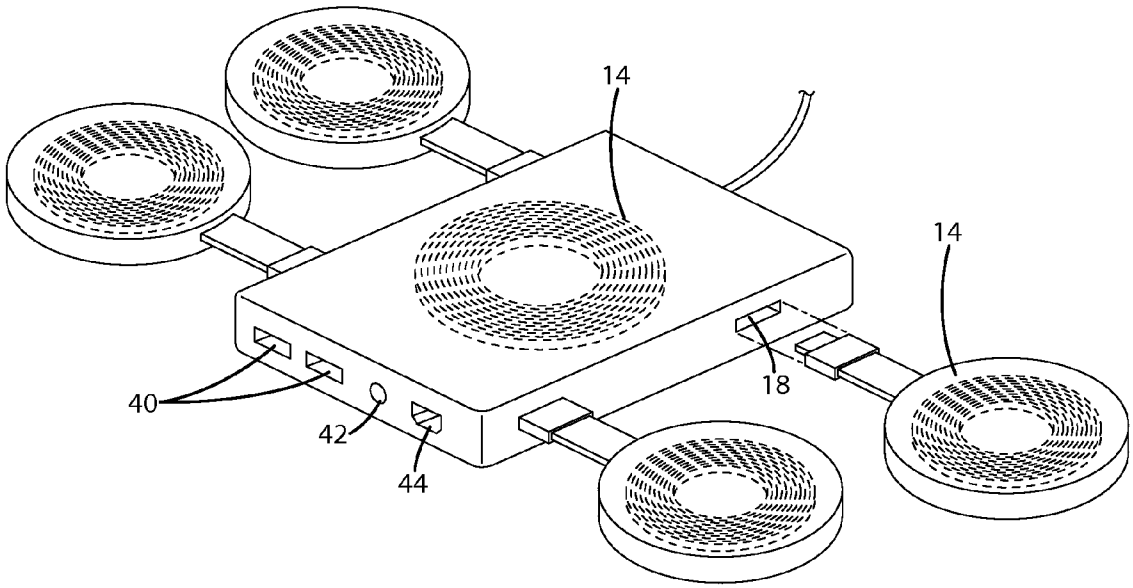

SAMSUNG EXHIBIT 1012

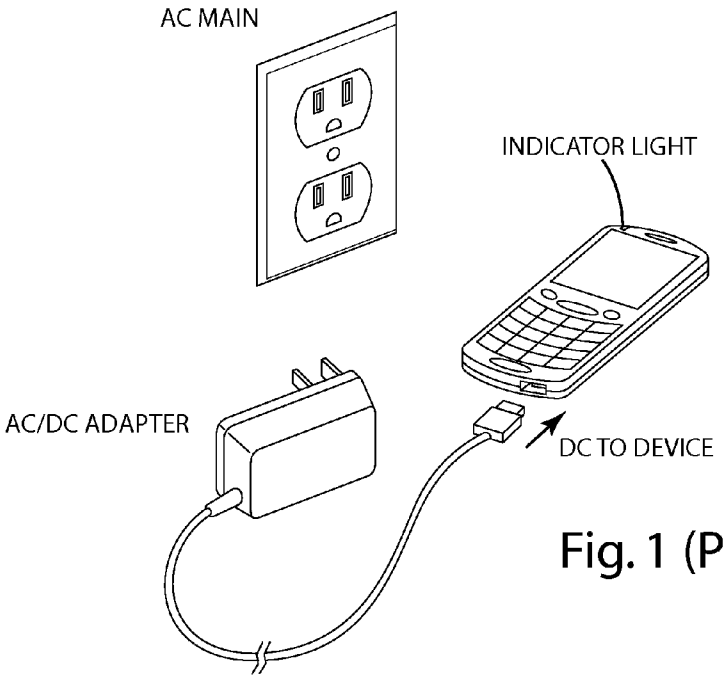

Fig. 1 (Prior Art)

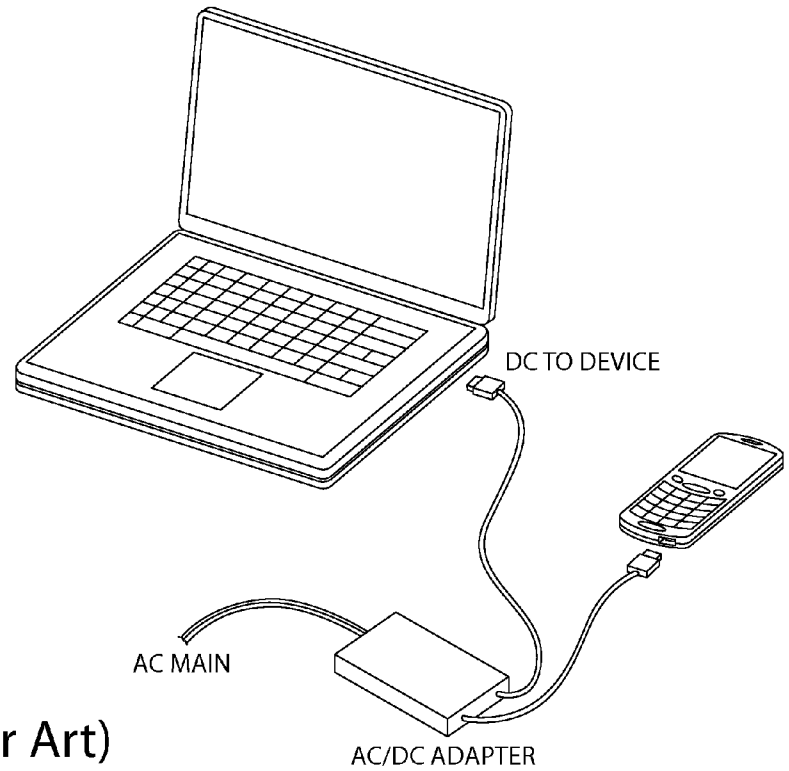

Fig. 2 (Prior Art)

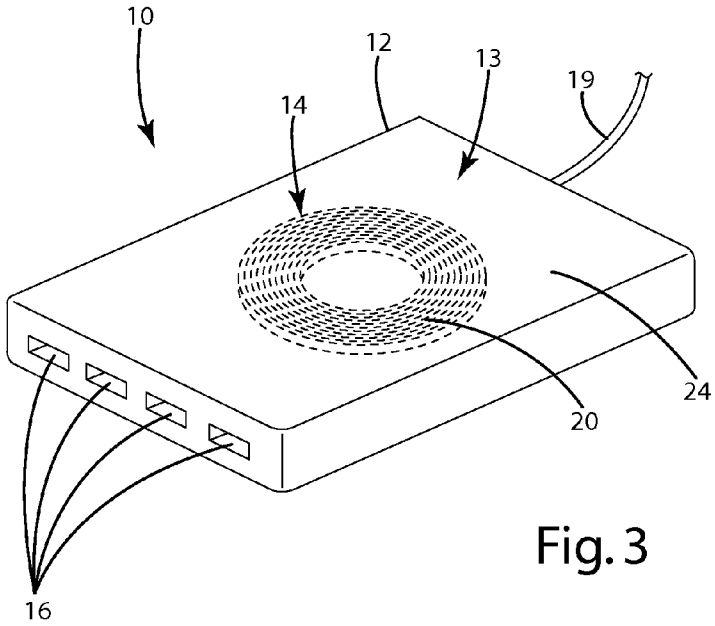

Fig. 3

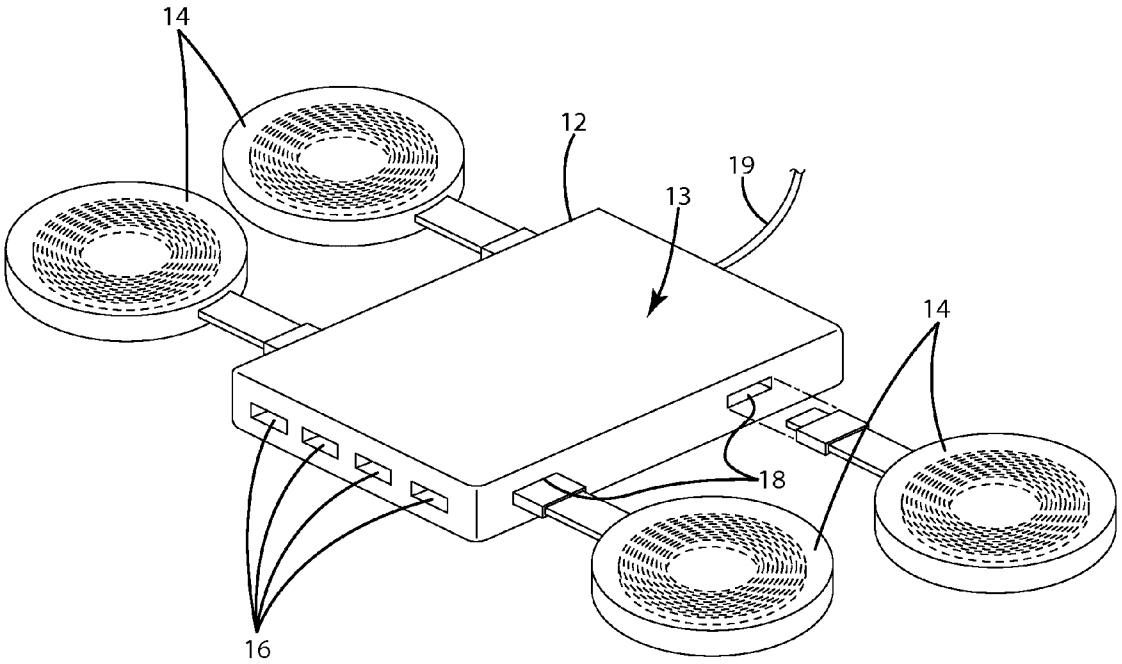

Fig. 4

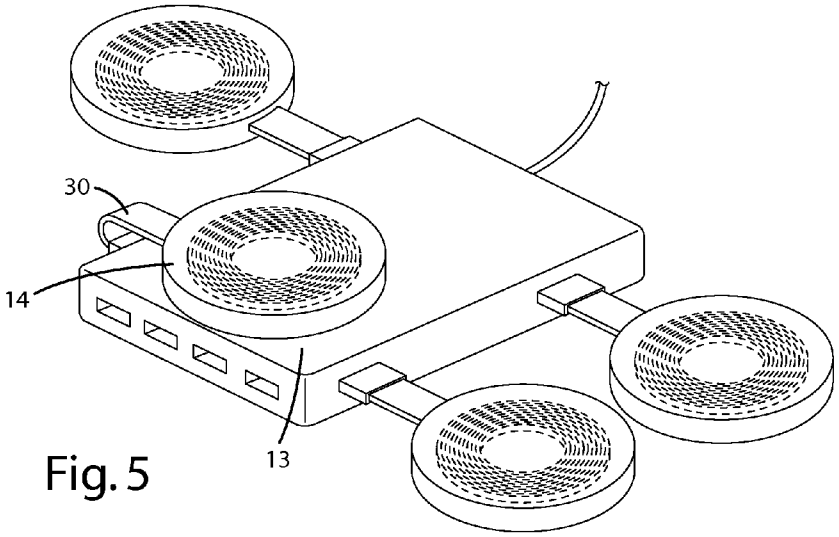

Fig. 5

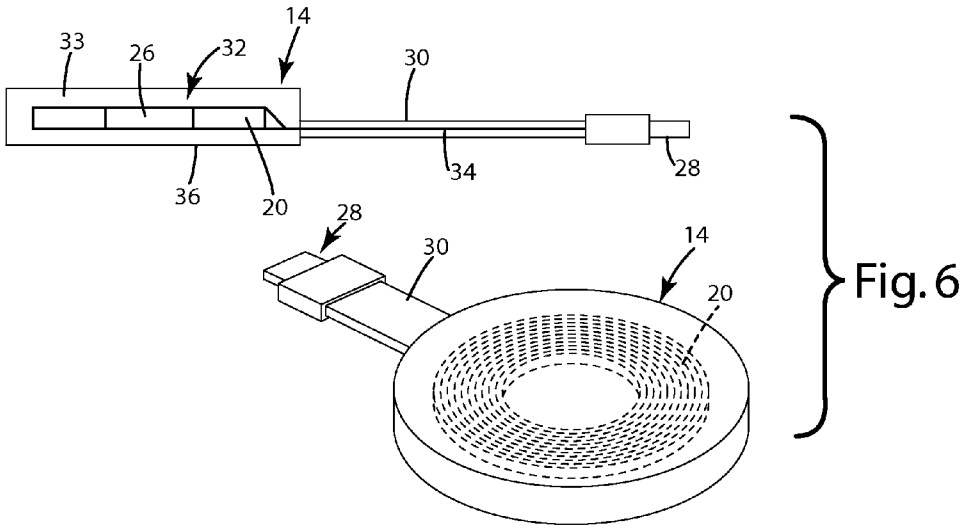

Fig. 6

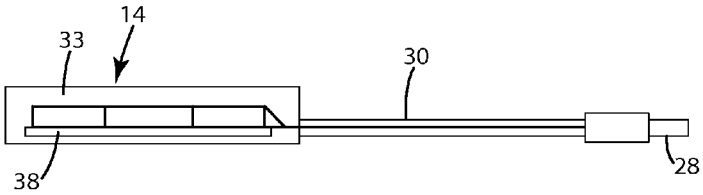

Fig. 7

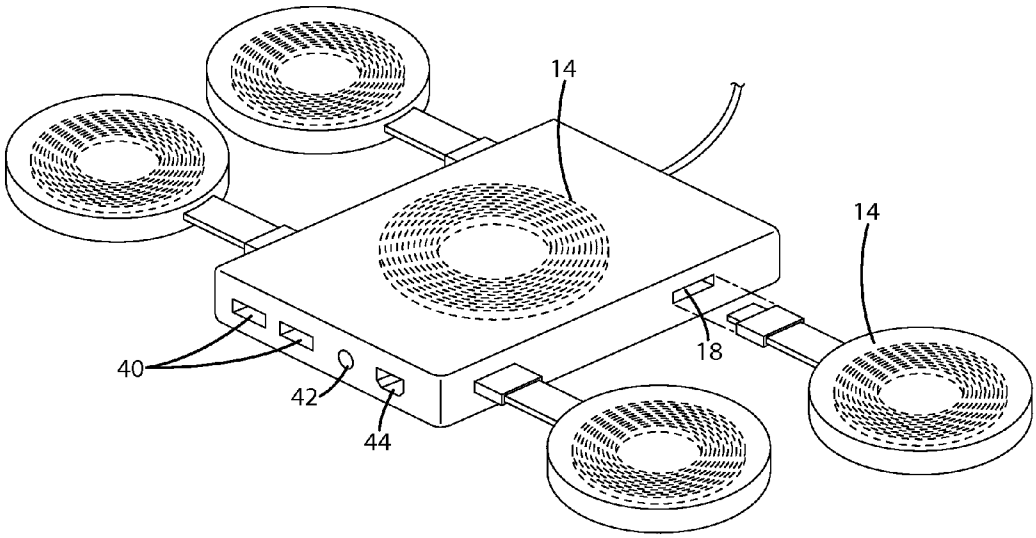

Fig. 8

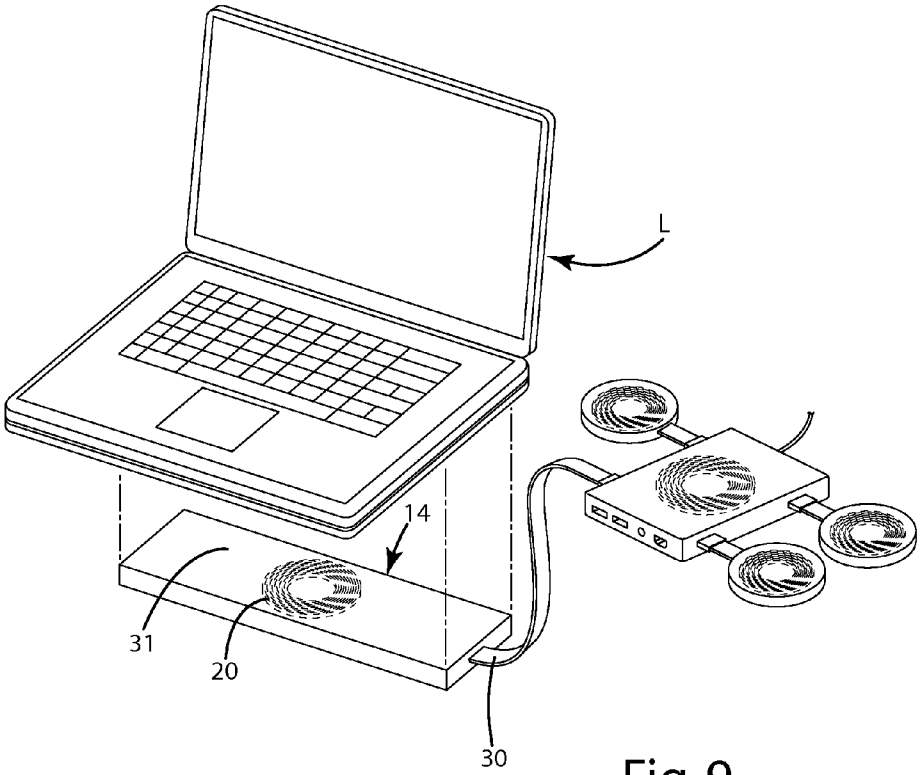

Fig. 9

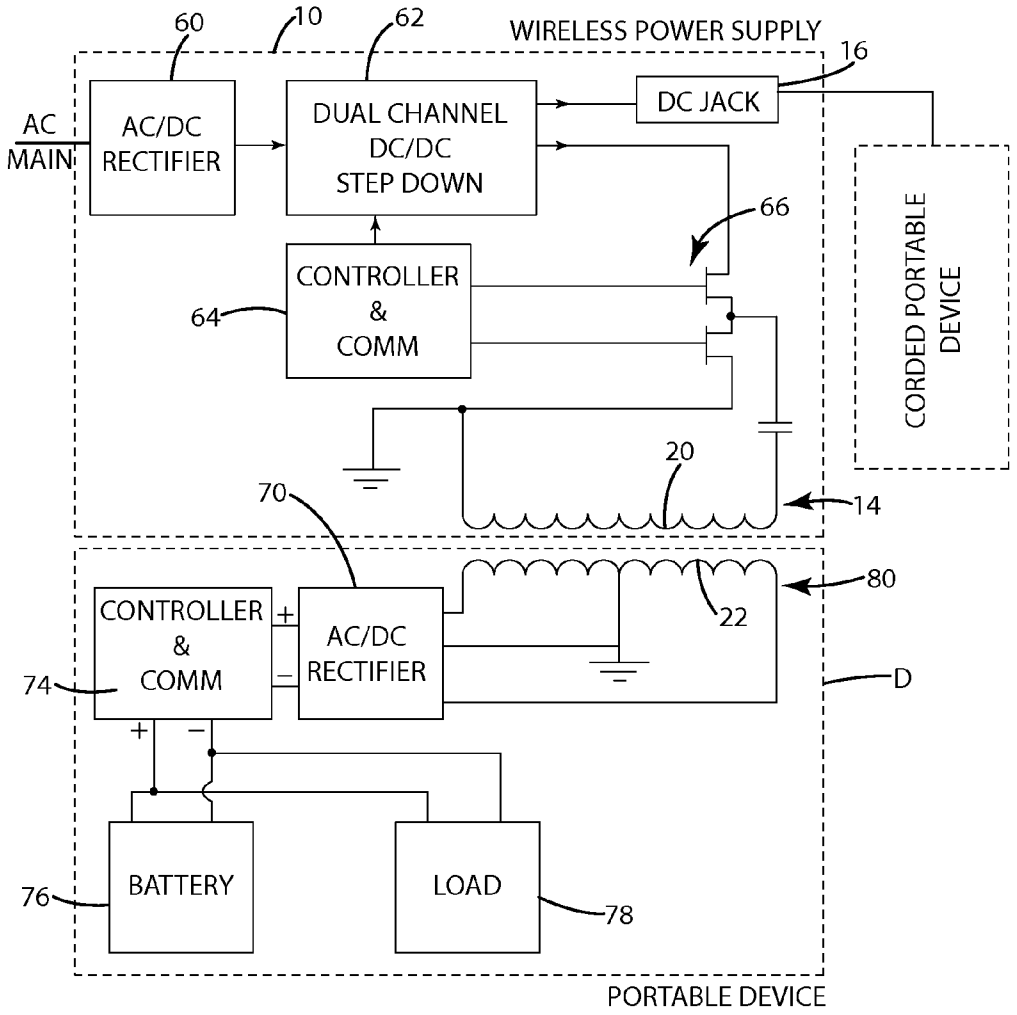
60
10
62
WIRELESS POWER SUPPLY
16
AC
MAIN
AC/DC
RECTIFIER
DUAL CHANNEL
DC/DC
STEP DOWN
DC JACK
66
CORDED PORTABLE
DEVICE
CONTROLLER
&
COMM
64
20
70
14
80
CONTROLLER
&
COMM
+
AC/DC
RECTIFIER
−
22
74
D
+
−
BATTERY
LOAD
76
78
PORTABLE DEVICE

Fig. 10

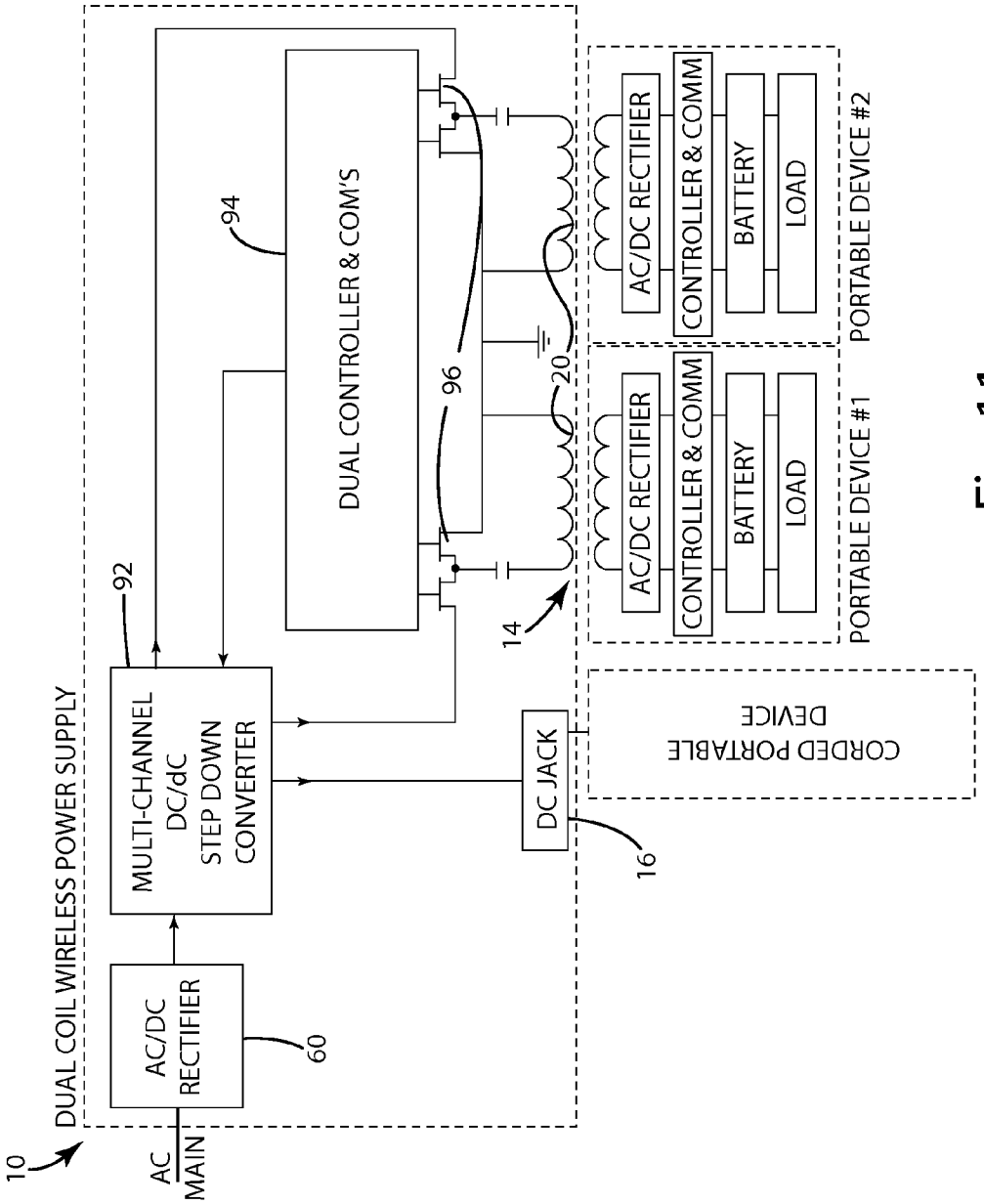
10
DUAL COIL WIRELESS POWER SUPPLY
AC MAIN
AC/DC RECTIFIER
60
MULTI-CHANNEL DC/dC STEP DOWN CONVERTER
92
DUAL CONTROLLER & COM'S
94
96
14
20
DC JACK
16
CORDED PORTABLE DEVICE
AC/DC RECTIFIER
CONTROLLER & COMM
BATTERY
LOAD
PORTABLE DEVICE #1
AC/DC RECTIFIER
CONTROLLER & COMM
BATTERY
LOAD
PORTABLE DEVICE #2

Fig. 11

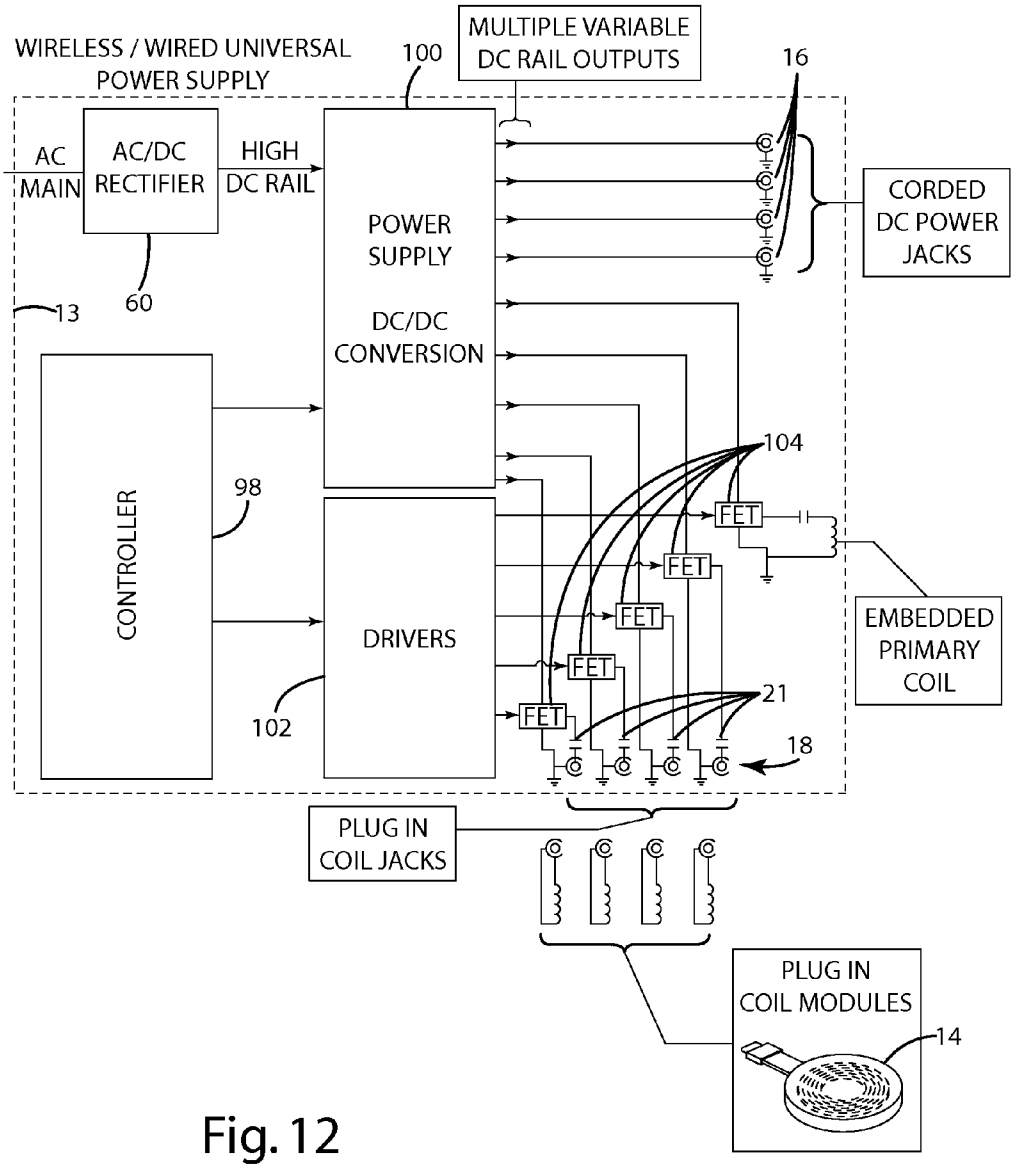
WIRELESS / WIRED UNIVERSAL POWER SUPPLY
100
MULTIPLE VARIABLE DC RAIL OUTPUTS
16
AC MAIN
AC/DC RECTIFIER
HIGH DC RAIL
POWER SUPPLY
DC/DC CONVERSION
CORDED DC POWER JACKS
13
60
CONTROLLER
98
104
FET
FET
FET
FET
FET
DRIVERS
102
21
18
EMBEDDED PRIMARY COIL
PLUG IN COIL JACKS
PLUG IN COIL MODULES
14

Fig. 12

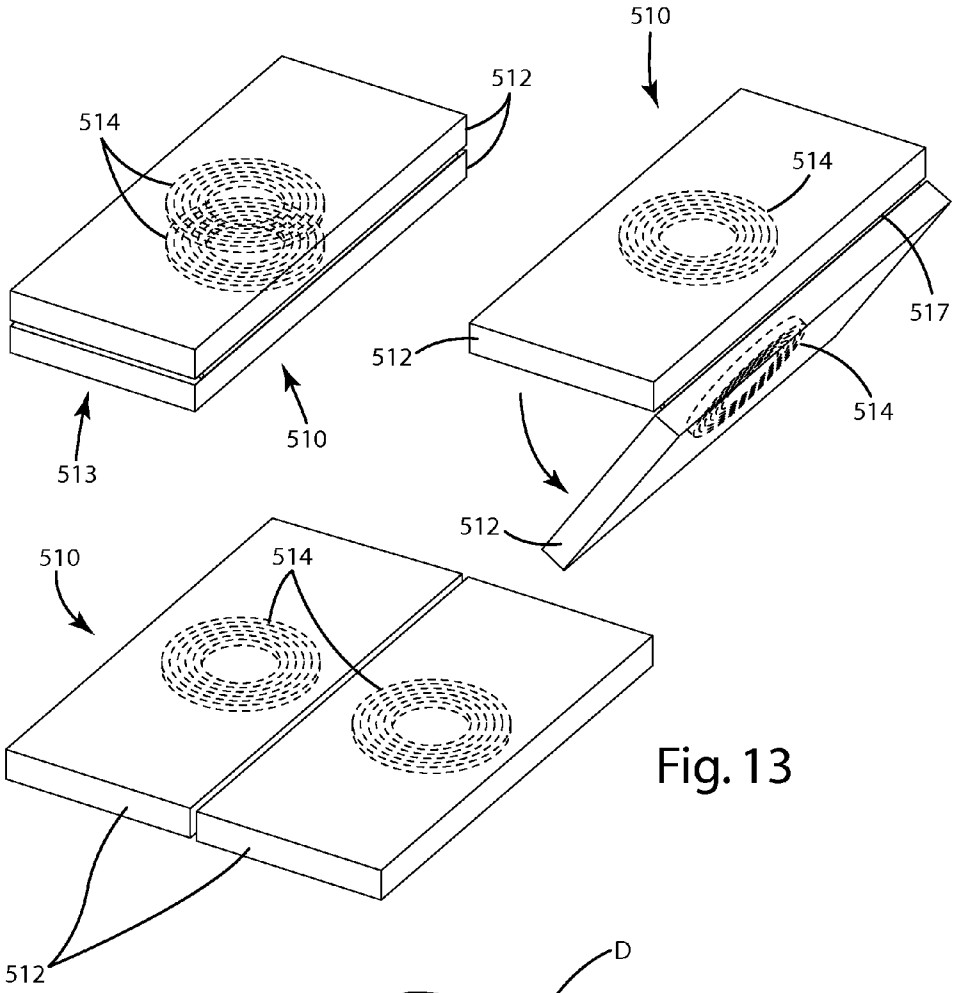
510
512
514
514
517
512
514
510
513
512
510
514
512

Fig. 13

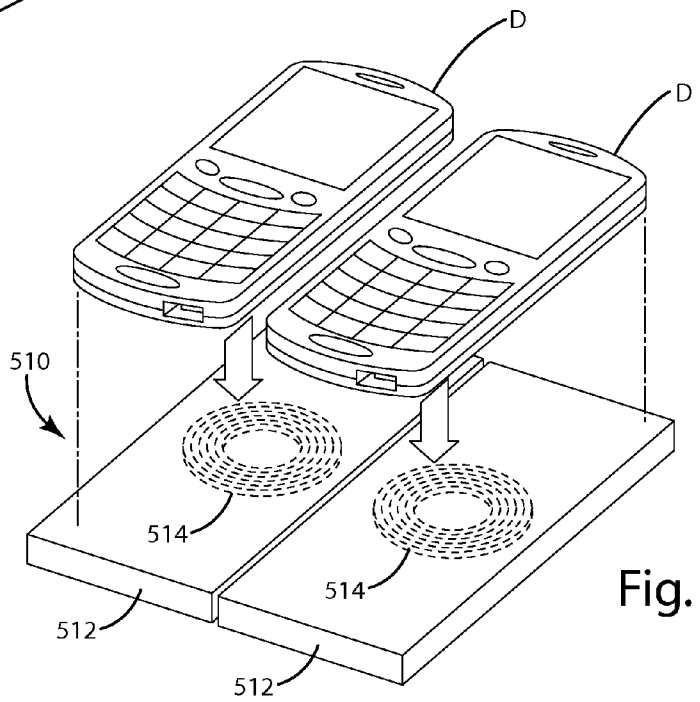
D
D
510
514
514
512
512

Fig. 14

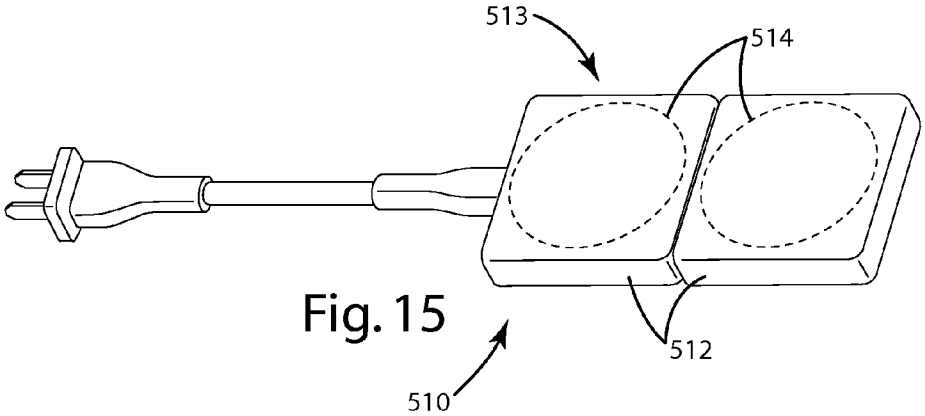

Fig. 15

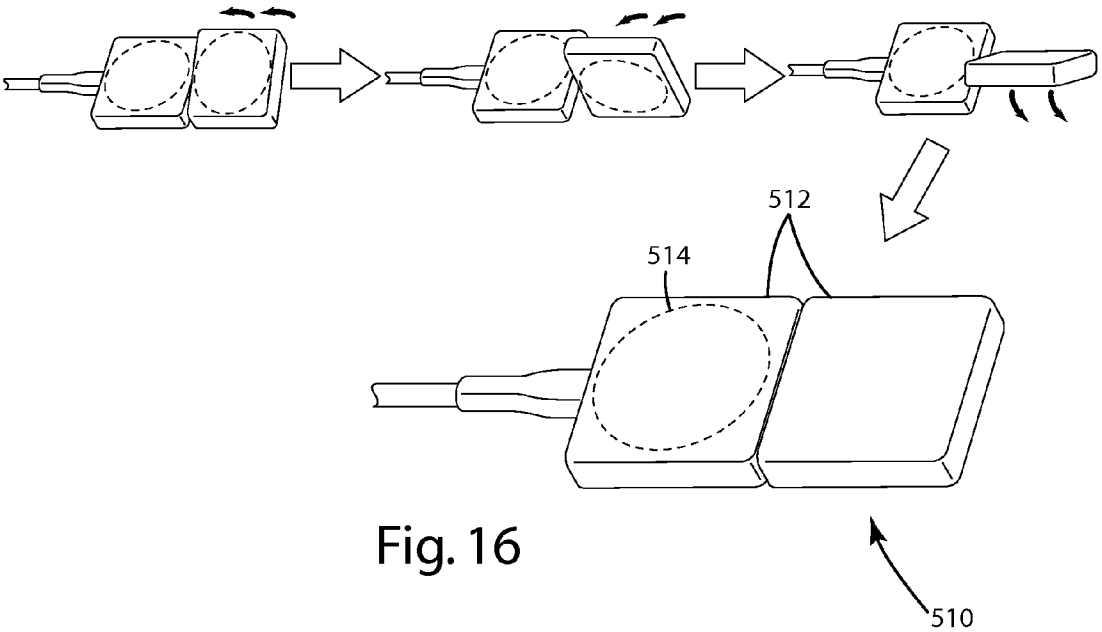

Fig. 16

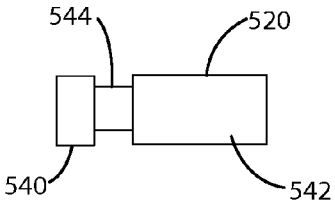

Fig. 17

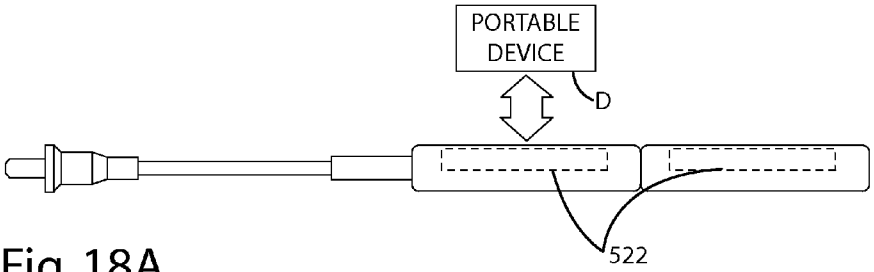

Fig. 18A

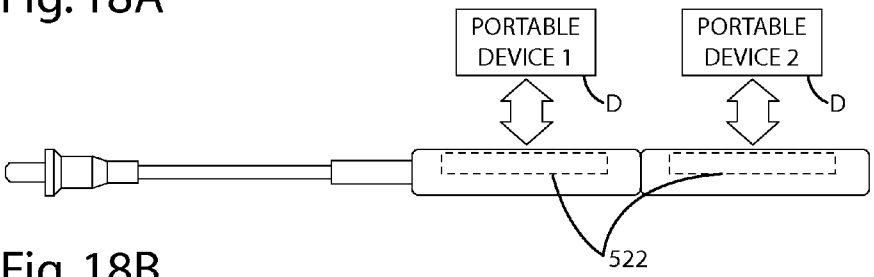

Fig. 18B

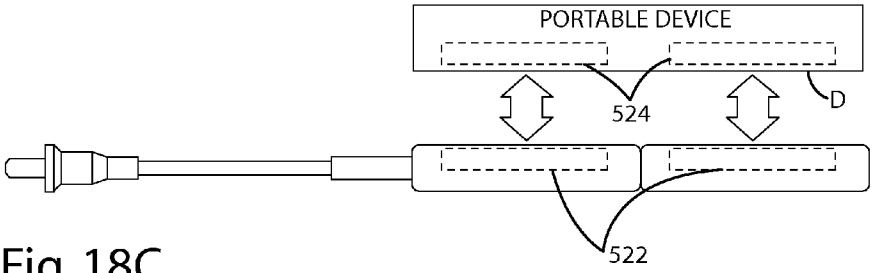

Fig. 18C

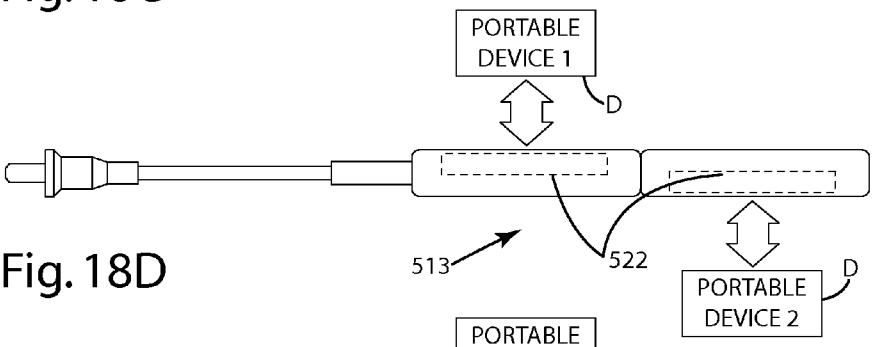

Fig. 18D

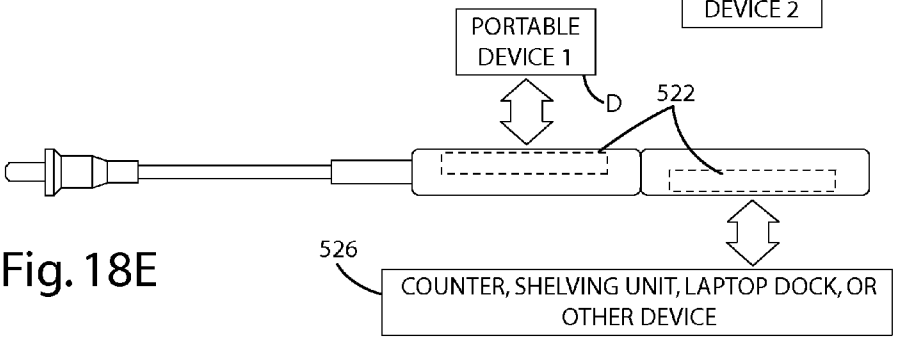

Fig. 18E

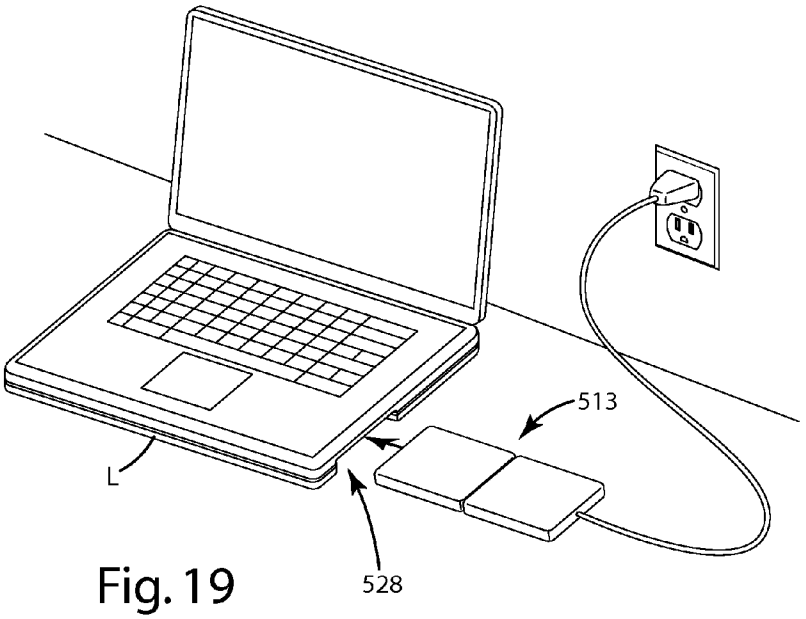

Fig. 19

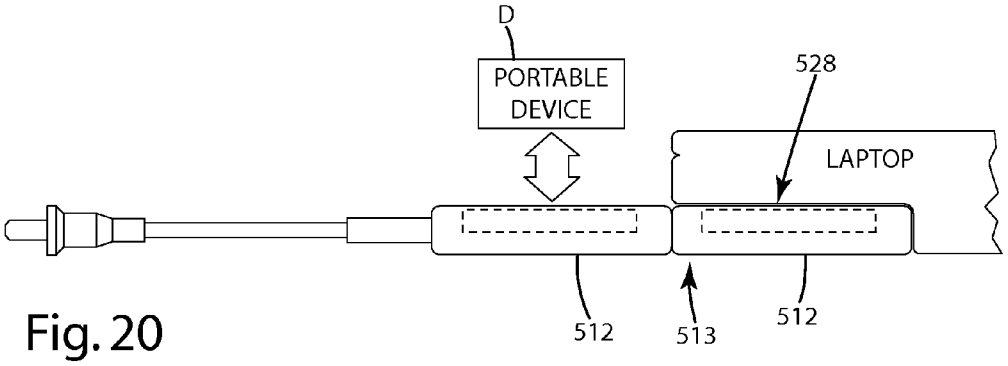

Fig. 20

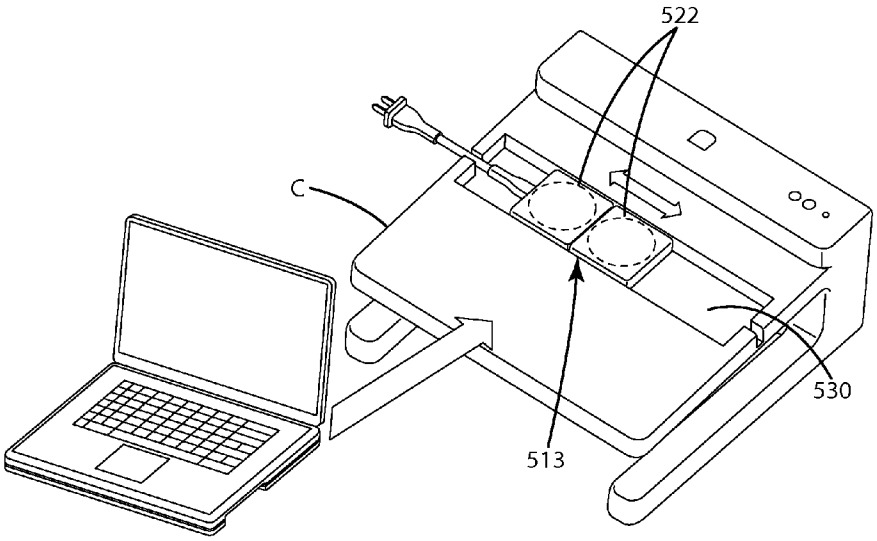

Fig. 21

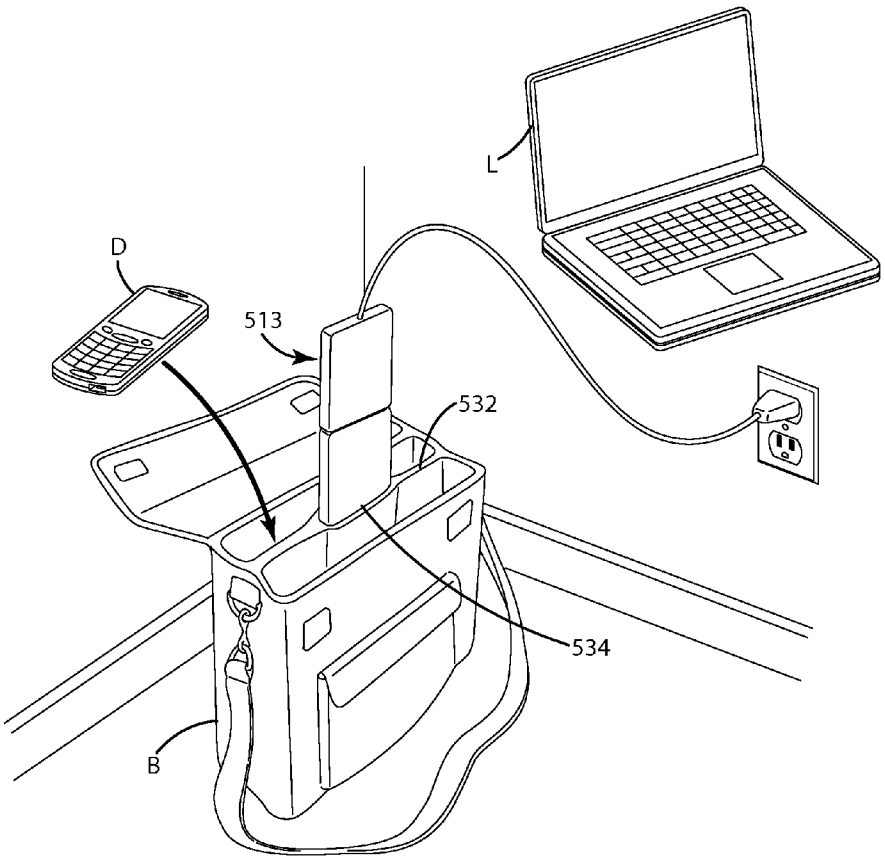

Fig. 22

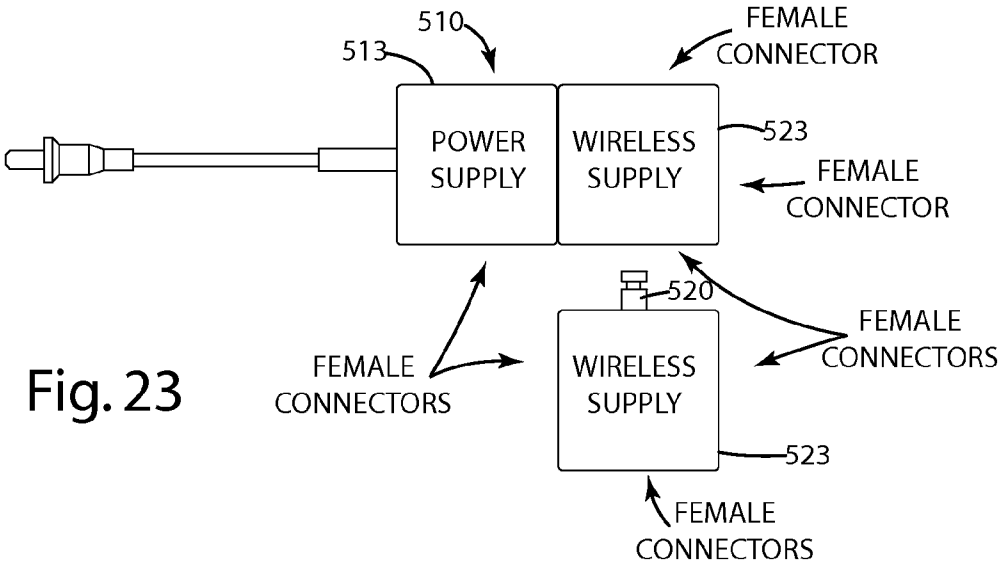

Fig. 23

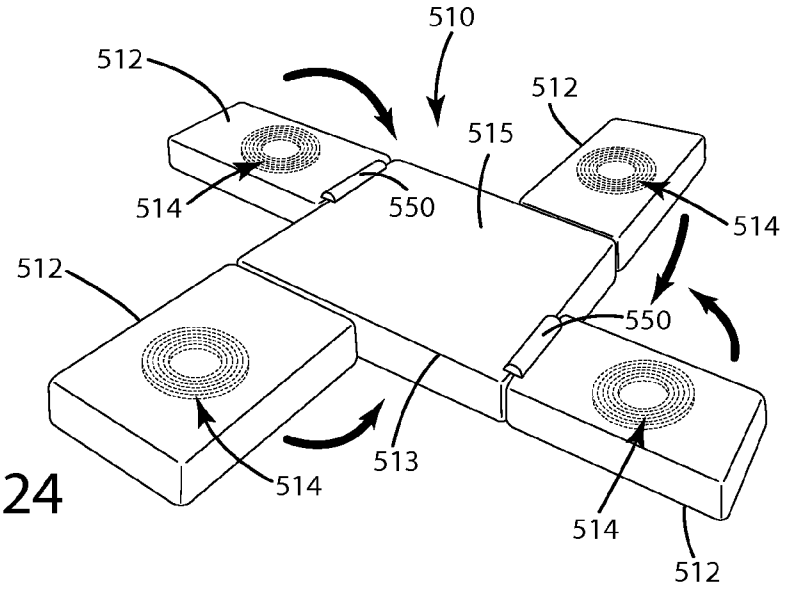

Fig. 24

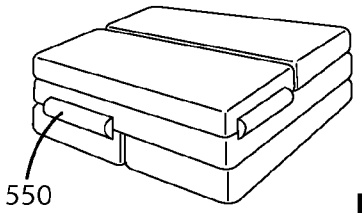

Fig. 25

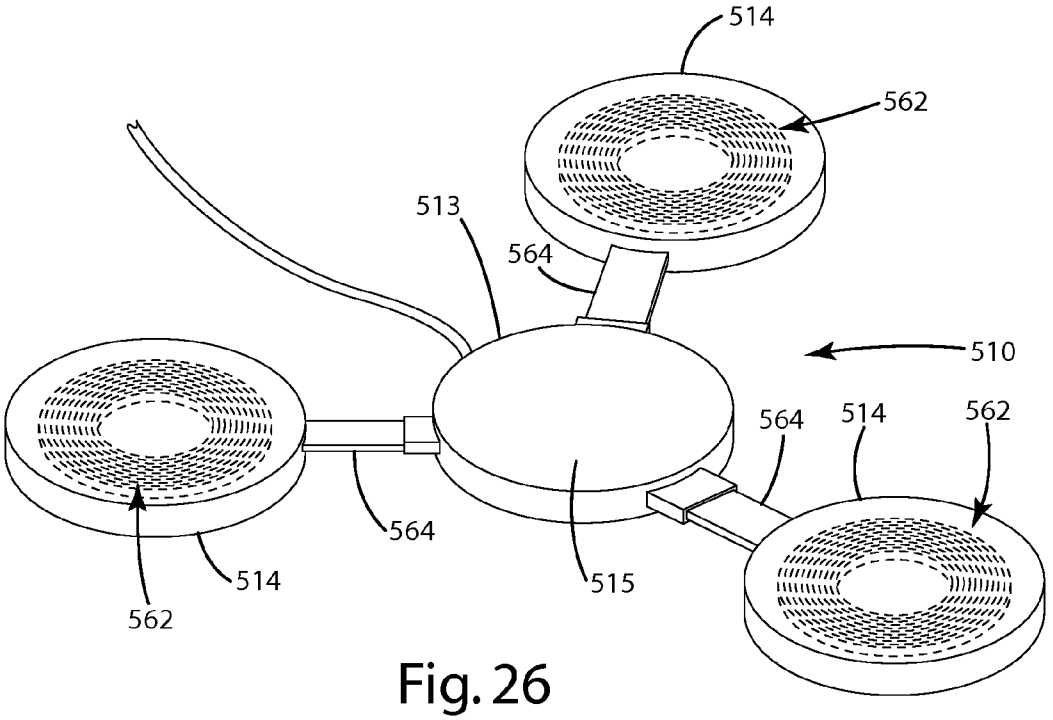

Fig. 26

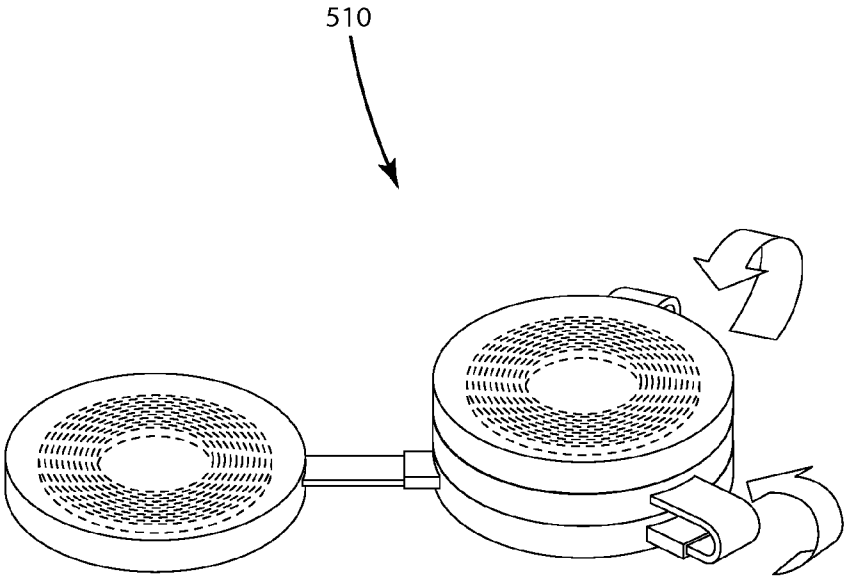

Fig. 27

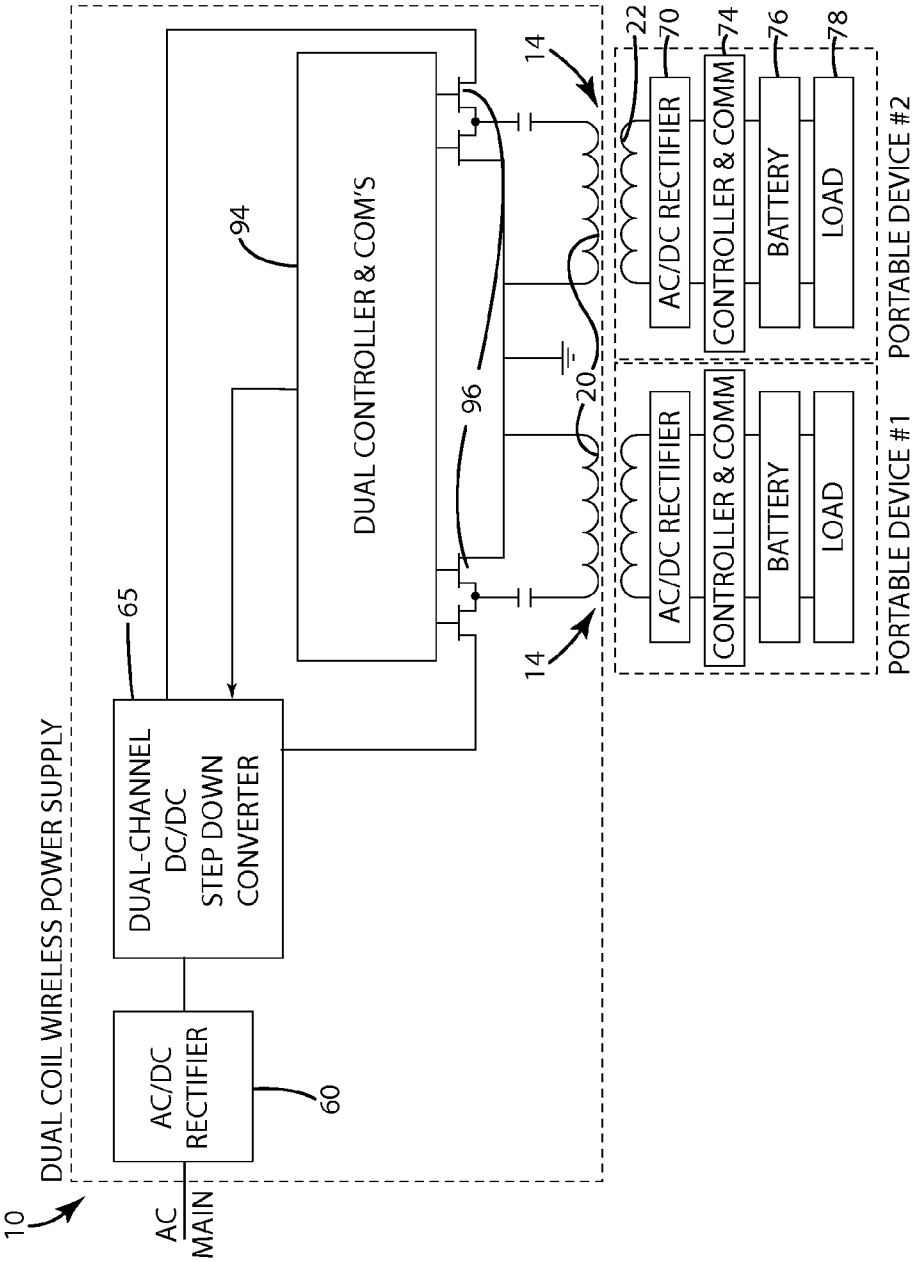
10
DUAL COIL WIRELESS POWER SUPPLY
AC MAIN
AC/DC RECTIFIER
60
DUAL-CHANNEL DC/DC STEP DOWN CONVERTER
65
94
DUAL CONTROLLER & COM'S
96
14
14
20
22
AC/DC RECTIFIER
70
CONTROLLER & COMM
74
BATTERY
76
LOAD
78
PORTABLE DEVICE #2
AC/DC RECTIFIER
CONTROLLER & COMM
BATTERY
LOAD
PORTABLE DEVICE #1

Fig. 28

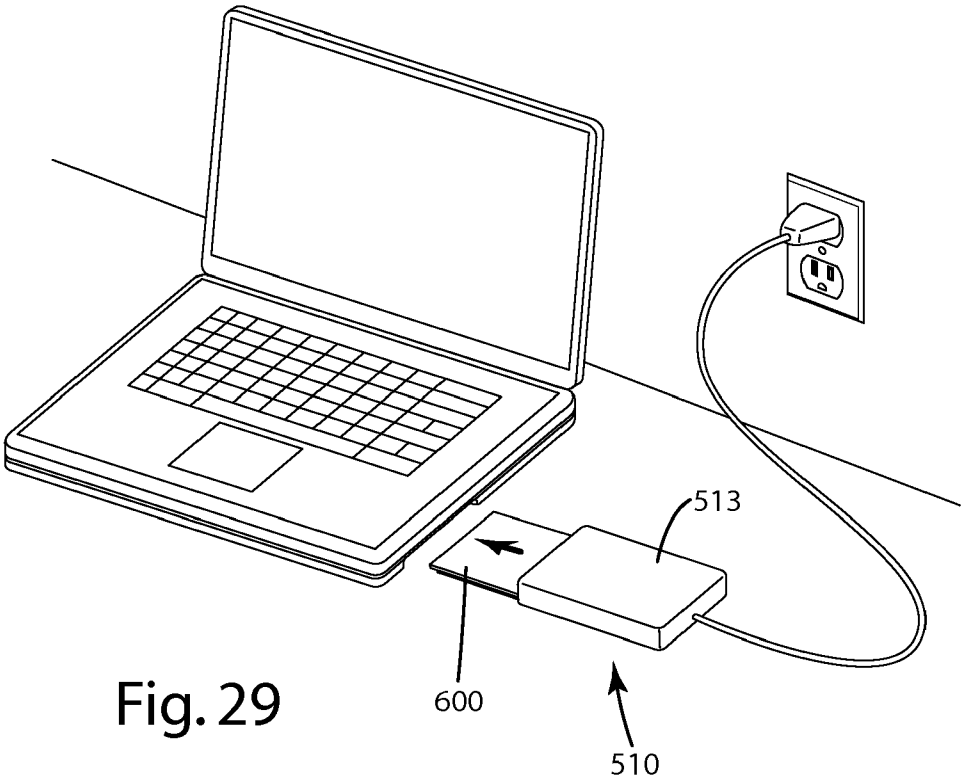

Fig. 29

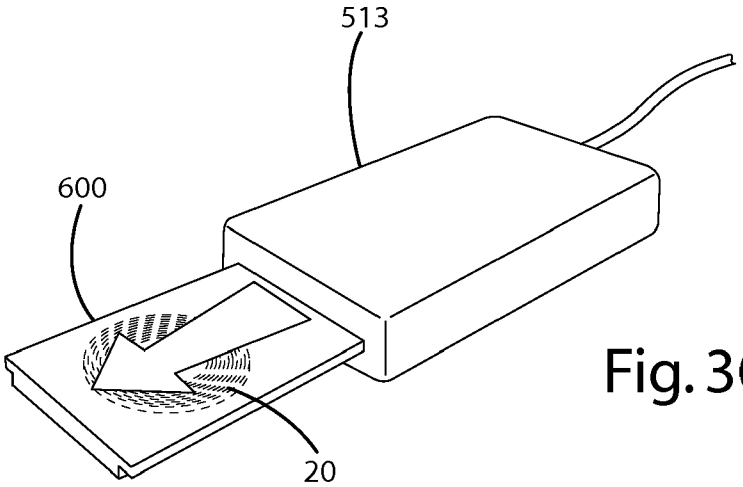

Fig. 30

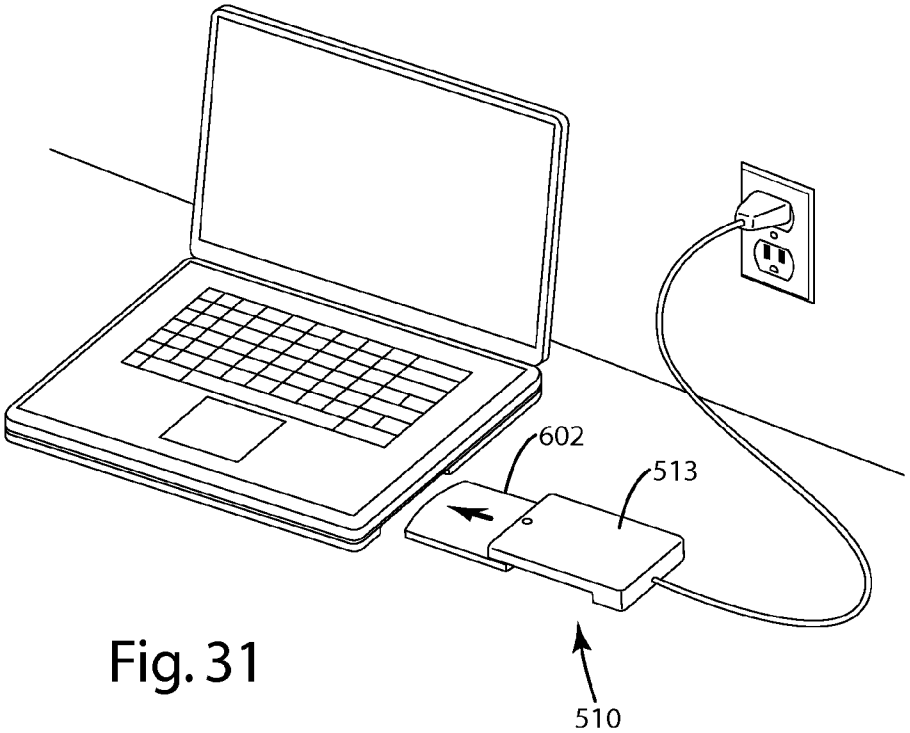

Fig. 31

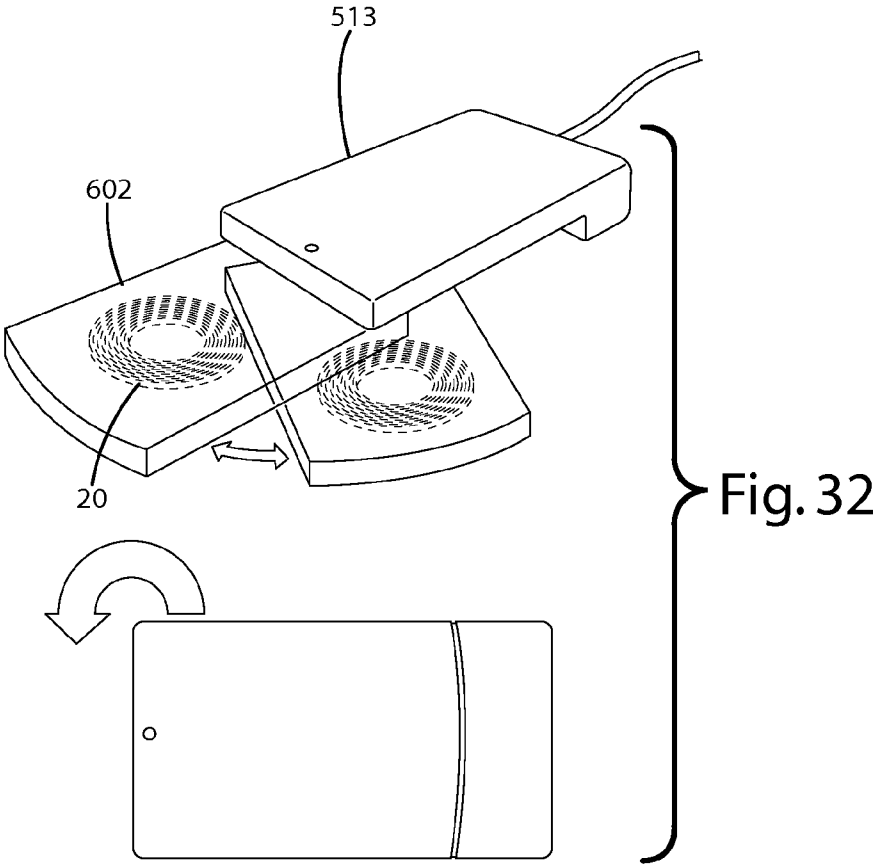

Fig. 32

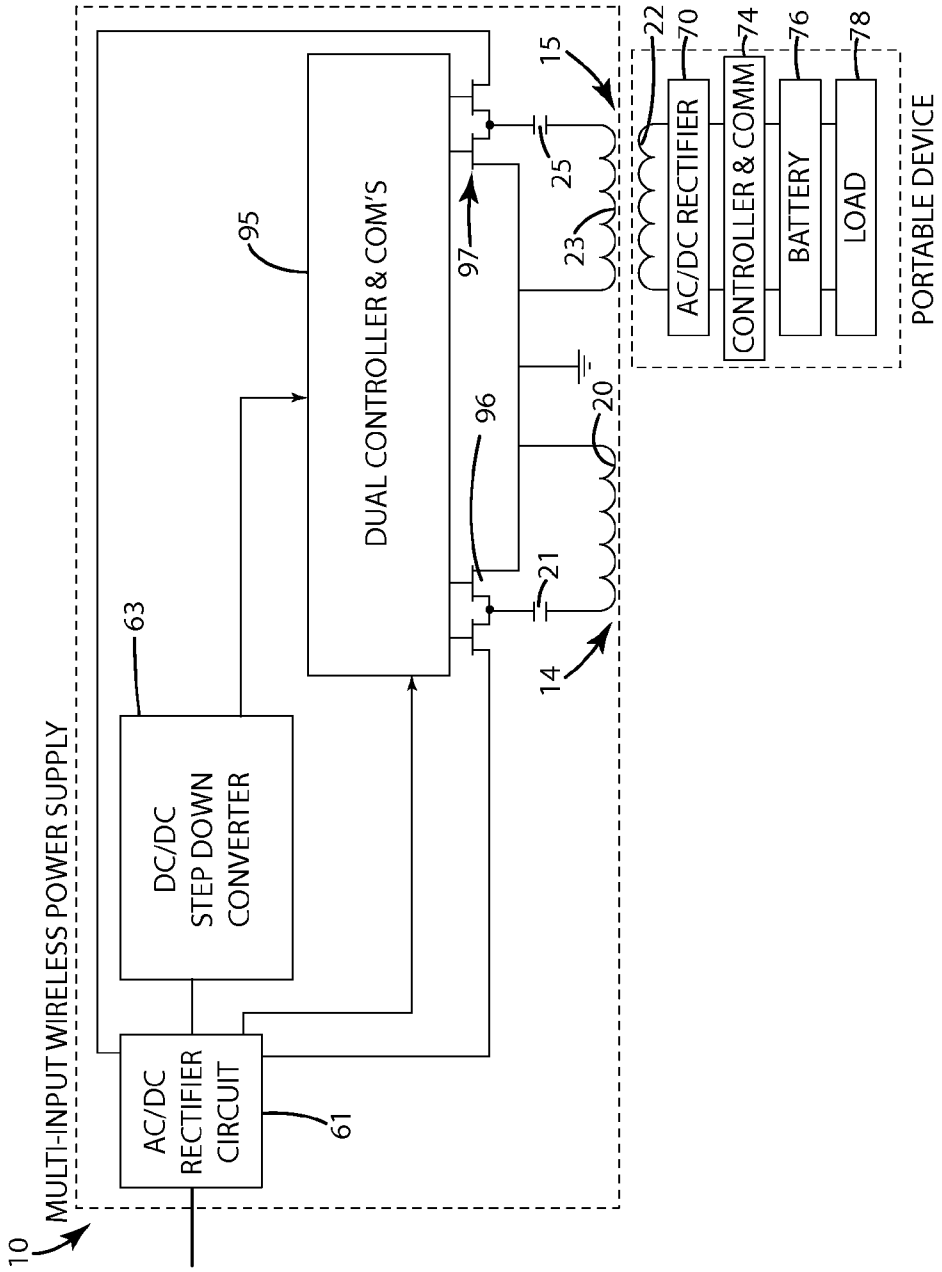
10
MULTI-INPUT WIRELESS POWER SUPPLY
AC/DC RECTIFIER CIRCUIT
61
DC/DC STEP DOWN CONVERTER
63
95
DUAL CONTROLLER & COM'S
96
97
14
21
20
15
25
23
22
AC/DC RECTIFIER
70
CONTROLLER & COMM
74
BATTERY
76
LOAD
78
PORTABLE DEVICE

Fig. 33

POWER SUPPLY

BACKGROUND OF THE INVENTION

[0001] The present invention relates to power supplies and more particularly to power supplies capable of supplying power to a variety of alternative devices.

[0002] There continues to be dramatic growth in the use of portable electronic devices, such as laptops, personal digital assistants, cellular phones, smart phones and portable media players. Although a variety of standards have been developed for providing wireless communication with electronic devices, many of these devices continue to be plagued by the need for a power supply that is connected to the electronic device by a cord. Typically, each power supply includes a power adapter for converting AC mains power into the DC power required by the device along with cords for connecting the input of the adapter to a wall outlet and the output of the adapter to the electronic device. In some cases, a plug extends from the adapter so that the adapter plugs directly into a wall outlet and only a single cord from the adapter to the electronic device is required (See FIG. **1**). Power adapters (often referred to as "bricks") are relatively heavy and occupy a large amount of space. Conventional power supply systems suffer from a variety of disadvantages. For example, the power supply with adapter and associated cords is a burden to use, store and carry around as needed. In use, cords create an unsightly and often unmanageable mess. Further, when connected, cords impede device mobility. With multiple portable devices, a user may be required to carry around multiple power supplies, including multiple power adapters and multiple cord sets. This only compounds the problem.

[0003] In an effort to reduce the problem, "universal" power supplies have been developed. Efforts to provide a universal power solution are complicated by a variety of practical difficulties. One of these difficulties arises because different portable electronic devices have different power requirements. A conventional universal power supply includes a single power adapter that is capable of providing power to multiple devices. For example, a conventional universal power supply is illustrated in FIG. **2**. In this embodiment, the power supply includes a power adapter having multiple power outlet ports. The power adapter is configured to supply a predetermined amount of power to each outlet port. Various electronic devices, such as laptops and smart phones can be connected to the power adapter using conventional cords. Although a marked improvement, this solution still requires a separate cord for each device connected to the power supply. Further, typical solutions require the electronic devices to be preconfigured to accept the predetermined power output by the power supply.

[0004] As an alternative to corded power supply solutions, there has recently been dramatic growth in the pursuit of wireless power solutions. Wireless power supply systems eliminate the need for power cords and therefore eliminate the many inconveniences associated with power cords. For example, wireless power solutions can eliminate: (i) the need to retain and store a collection of power cords, (ii) the unsightly mess created by cords, (iii) the need to repeatedly physically connect and physically disconnect remote devices with cords, (iv) the need to carry power cords whenever power is required, such as recharging, and (v) the difficulty of identifying which of a collection of power cords is used for each device.

[0005] The introduction of wireless power solutions has in one respect made power management across multiple devices more complicated—at least in the short term. For example, a user that has both wirelessly powered/charged devices and devices that are powered/charged using wires will be required to carry both wired and wireless power supplies. Even if the user has invested in a universal power supply for all of the users wired devices, a separate wireless power supply will be required.

SUMMARY OF THE INVENTION

[0006] In one aspect, the present invention provides a universal power supply that is capable of supplying power to a variety of both wired and wireless electronic devices. In one embodiment, the power supply includes an integrated wireless power transmitter and one or more power outlets for wired power supply. In those embodiments in which the power supply includes multiple power outlets, different power outlets may supply different amounts of power. Different plug shapes may be provided to differentiate between different amounts of power. In other embodiments, all of the power outlets may provide the same amount of power. In embodiments of this nature, the power ports may be conventional USB ports that include power in accordance with USB standards.

[0007] In an alternative embodiment, the power supply may include power outlets configured to receive removable wireless power transmitters, such as removable primary coils. In some embodiments, different plug shapes may be provided to differentiate between power outlets for wireless transmitters and power outlets for wired devices. In some embodiments, the plug shapes may be the same and the electronics of the power adapter may be capable of determining what has been plugged into a given power outlet and provide that power outlet with the appropriate power.

[0008] In a second aspect, the present invention provides a universal wireless power supply having a plurality of wireless power transmitters powered by a single power adapter. In one embodiment, the power adapter includes a plurality of integrated power transmitters and is configured to provide freedom of movement of the power transmitters. In one embodiment, the power transmitters may be connected to the power adapter by flexible connectors that permit the assembly to be folded up to reduce space. The flexible connectors may also provide the power transmitters with some degree of positional freedom.

[0009] In another embodiment of the second aspect, the power adapter may include a plurality of sections that are movably connected to one another. Separate power transmitters may be located in different sections so that movement of one section with respect to another provides positional freedom between power transmitters. The sections may be joined by a hinge, a pivot joint or other suitable mechanical structure.

[0010] In another embodiment, the power supply may include a power adapter having power outlet ports capable of selectively receiving a plurality of wireless power transmitters. One or more power transmitters may be selectively connected to the power supply, as desired. In one embodiment, each wireless power transmitter may include one or more power outlet ports for further wireless power transmitters so that wireless power transmitters may be daisy-chained.

[0011] In the first aspect, the present invention provides a universal power supply that is capable of supplying power to both wired and wireless electronic devices. In this aspect, the

present invention provides a convenient, easy to use power supply that can be used for a wide variety of devices, thereby eliminating the need to carry multiple power supplies even when a user would like to power both wired and wireless devices. In a second aspect, the present invention provides a wireless power supply that is adaptable to different applications. In those embodiments with movable power supply sections, the power supply can be configured for easy storage and reconfigured to provide convenient wireless charging for devices of various types. In those embodiments with removable power supply transmitters, the size of the power supply can be kept to a minimum by adding only those power supply transmitters needed. The wireless power supply also adds the additional benefit of allowing inherent intrinsic safety. This element allows for high voltage within the power supply to be used with an inherent intrinsic safety. Power supply grounding and insulation can be more simple and cost effective that traditional power supplies. This also increases the safety and reliability of such power supplies. These power supplies can also include the an ultra low power option for minimum standby, such as the system described in U.S. Patent Publication 2010/0084918, filed on Oct. 2, 2009 entitled Power System, which is herein incorporated by reference in its entirety.

[0012] These and other objects, advantages, and features of the invention will be more fully understood and appreciated by reference to the description of the current embodiment and the drawings.

BRIEF DESCRIPTION OF THE DRAWINGS

[0013] FIG. **1** is an illustration of an electronic device with a conventional wired power supply.

[0014] FIG. **2** is an illustration of a pair of electronic devices with a conventional multiple output wired power supply.

[0015] FIG. **3** is an illustration of a power supply in accordance with an embodiment of the first aspect of the present invention.

[0016] FIG. **4** is an illustration of a first alternative power supply in accordance with an embodiment of the present invention.

[0017] FIG. **5** is an illustration of the first alternative power supply with a detachable coil folded onto the power adapter.

[0018] FIG. **6** is a partially sectional illustration of the removable power transmitter.

[0019] FIG. **7** is a partially sectional illustration of an alternative removable power transmitter.

[0020] FIG. **8** is an illustration of a second alternative power supply.

[0021] FIG. **9** is an illustration of the second alternative power supply with a wireless computer expansion module.

[0022] FIG. **10** is a schematic representation of a circuit for the power supply.

[0023] FIG. **11** is a schematic representation of a first alternative circuit for the power supply.

[0024] FIG. **12** is a schematic representation of a second alternative circuit for the power supply.

[0025] FIG. **13** is a series of illustrations showing a power supply in accordance with an embodiment of the second aspect of the present invention.

[0026] FIG. **14** is an illustration showing the placement of electronic devices on the power supply of FIG. **13**.

[0027] FIG. **15** is an illustration of an alternative power supply in accordance with the second aspect of the present invention.

[0028] FIG. **16** is a series of illustrations showing movement of the second alternative embodiment between different configurations.

[0029] FIG. **17** is end and side views of a connector for joining power adapter sections.

[0030] FIGS. **18**A-E are illustrations showing various uses of the power supply of FIG. **15**.

[0031] FIG. **19** is an illustration showing how the power supply of FIG. **15** may be used with a computer.

[0032] FIG. **20** is an illustration showing the power supply of FIG. **15** in place adjacent a computer.

[0033] FIG. **21** is an illustration showing the power supply of FIG. **15** incorporated into a computer dock.

[0034] FIG. **22** is an illustration showing the power supply of FIG. **15** incorporated into a computer bag.

[0035] FIG. **23** is an illustration of a third alternative power supply in accordance with the second aspect of the present invention.

[0036] FIG. **24** is an illustration of a fourth alternative power supply in accordance with the second aspect of the present invention.

[0037] FIG. **25** is an illustration showing the power supply of FIG. **24** in a folded configuration.

[0038] FIG. **26** is an illustration of a fifth alternative power supply in accordance with the second aspect of the present invention.

[0039] FIG. **27** is an illustration showing the power supply of FIG. **26** in a folded configuration.

[0040] FIG. **28** is a schematic representation of a circuit for a power supply in accordance with a second aspect of the present invention.

[0041] FIG. **29** is an illustration of a power brick with an extended panel wireless power transmitter being positioned to power a laptop.

[0042] FIG. **30** is an illustration of the power brick with extendable panel of FIG. **29**.

[0043] FIG. **31** is an illustration of a power brick with a rotatable panel wireless power transmitter being positioned to power a laptop.

[0044] FIG. **32** is an illustration of a perspective and bottom view of the power brick of FIG. **31**.

[0045] FIG. **33** is a schematic representation of a circuit for a multi-input wireless power supply.

DESCRIPTION OF THE CURRENT EMBODIMENT

[0046] A power supply in accordance with an embodiment of one aspect of the present invention is shown in FIG. **3**. The power supply **10** generally includes a power adapter **13** with a wireless power transmitter **14** to provide power to wireless electronic devices D and a plurality of power outlet ports **16** to provide power to wired electronic devices WD. The power adapter **13** includes the electronics required to convert AC mains power into the power required by the electronic devices. The wireless power transmitter **14** may be integrated into the power adapter **13** or may be attached to the power adapter **13** via a port **18** (shown in FIG. **4**). In use, a user can attach a wired device WD to the power supply **10** using a conventional cord C inserted into the appropriate power outlet port **16**. The wired device WD may use the power for operation and/or for charging an internal battery. Multiple wired devices WD can be connected to the power supply **10** using separate cords C inserted into different power outlet ports **16**. Wireless devices D can be placed in close proximity to the

wireless power transmitter **14** to wirelessly receive power (for example, for charging or operating). A variety of alternative embodiments of this first aspect of the present invention are disclosed.

[0047] A power supply in accordance with a second aspect of the present invention is shown in FIG. **13**. In this embodiment, the power supply **510** generally includes a power adapter **513** with a plurality of wireless power transmitters **514**. The power adapter **513** includes a plurality of sections that are movable with respect to one another. In this embodiment, the sections are joined along a hinge or fold line that permits the two sections to be folded and unfolded as desired. Each section includes one or more wireless power transmitters so that movement of the sections results in selective variation in the position and orientation of the wireless power transmitters. As with the first aspect of the present invention, a variety of alternative embodiments of the second aspect of the present invention are disclosed.

[0048] As noted above, the first aspect of the present invention provides a power supply **10** that is capable of wirelessly providing power to at least one wireless electronic device D using a wireless power transmitter and to at least one wired electronic device WD using one or more power outlet ports **16**. One embodiment of this aspect of the present invention is shown in FIG. **3**. FIG. **3** shows a power supply **10** having an integrated wireless power transmitter **14** and a plurality of power outlet ports **16** disposed in a housing **12**. The power supply **10** includes a power input cord **19** for connecting the power supply **10** to AC mains, for example, via a wall plug (not shown). The internal circuitry (described in more detail below) of the power supply **10** transforms the AC mains power into the power for a plurality of wired and wireless electronic devices.

[0049] In the illustrated embodiment, the power supply **10** is configured to wirelessly supply power using generally conventional inductive power transfer techniques and apparatus. For example, the wireless power transmitter **14** may produce an electromagnetic field that may be picked up and used to generate power in a wireless electronic device D. The wireless power transmitter **14** of this embodiment is a primary coil of wire **20** configured to produce an electromagnetic field suitable for inductively transmitting power to a wireless electronic device D. Similarly, the wireless electronic device of this embodiment includes a secondary coil **22** of wire configured to generate power when placed in the presence of a suitable electromagnetic field. Although the illustrated embodiments utilize inductive techniques to wirelessly transfer power to the wireless device, the power supply **10** may alternatively (or in addition) use other forms of wireless power transfer.

[0050] In this illustrated embodiment, the power supply **10** includes a generally rectangular housing **12**. The size, shape and configuration of the housing **12** may vary from application to application. A plurality of power outlet ports **16** are mounted within the housing **12** for supplying power to wired devices. The power outlet ports **16** may be conventional USB ports that receive conventional USB plugs and supply power in accordance with applicable USB standards. This permits the power supply **10** to provide power to essentially any wired device capable of being charged through a conventional USB port. The number and type of power output ports **16** may vary from application to application depending on the number and types of devices to be powered by the power supply **10**. For example, the type of ports may vary to allow the power supply to power devices that are not compatible with USB standards. In the illustrated embodiment, the power outlet ports **16** are disposed in the end wall of the housing opposite the end wall in which the power cord **19** enters the housing **12**. The power outlet ports may, however, be disposed in essentially any location about the housing **12**.

[0051] The wireless power transmitter **14** is mounted within the housing **12** and is disposed beneath the top surface **24** in the illustrated embodiment. This permits a wireless device to be placed on top of the housing **12** to wirelessly receive power. Although the top surface **24** of the housing **12** is planar in the illustrated embodiment, the top surface may by shaped to correspond with the shape of intended wireless devices. For example, the bottom surface of the wireless device D and the top surface **24** of the housing **12** may have corresponding contours so that the wireless device D nests with the top surface **24** of the housing **12**. As noted above, the wireless power transmitter **14** of this embodiment is a primary coil **20**. The size, shape and configuration of the primary coil **20** may vary from application to application. For example, the diameter of the primary coil **20**, the number of turns of wire in the coil **20** and the size of the wire used to form the coil **20** may vary based on the specific application. If desired, a magnet (not shown) may be located in the housing **12**, for example, in the center of the primary coil **20**, to assist in aligning the primary coil **20** with the secondary coil **22** in a wireless device D. The magnet (not shown) may also assist in holding the wireless device D in position on the housing **12**.

[0052] FIG. **4** is directed to an alternative embodiment of the power supply **10** in which one or more wireless power transmitters **14** may be selectively connected to the power adapter **13**. In this embodiment, a plurality of power outlet ports **16** are provided for supplying power to wired devices, and a plurality of wireless transmitter ports **18** are provided for selectively attaching detachable wireless power transmitters **14**. As with the embodiment of FIG. **3**, the power outlet ports **16** may be conventional USB ports that receive conventional USB plugs and supply power in accordance with applicable USB standards. This permits the power supply **10** to provide power to essentially any wired device capable of being charged through a conventional USB port. Although this embodiment includes power outlet ports **16**, the ports may in some embodiments be eliminated, such that the power supply **10** is configured to supply power only wirelessly. The wireless transmitter ports **18** may be essentially any port capable of selectively receiving a detachable wireless power transmitter. The number and type of wireless transmitter ports **18** may vary from application to application, as desired.

[0053] Although the design and configuration of the detachable wireless power transmitters may vary, one embodiment is described with reference to FIG. **6**. The detachable transmitter **14** of the illustrated embodiment generally includes a plug **28**, a connector section **30** and a coil assembly **32**. The plug **28** may be essentially any plug **28** suitable for selectively electrically connecting the detachable transmitter to the power adapter **13**. To prevent connection to the wrong port, the plug **28** may be different from the plugs used for the power outlet ports **16**. In this embodiment, the connector section **30** may include flexible leads **34** that extend between the plug **28** and the primary coil **20**. The flexible leads **34** permit the wireless power transmitters **14** to be folded up onto the power adapter to reduce size, for example, during storage (See FIG. **5**). The flexible leads may be essentially any flexible, foldable or otherwise adjustable structure

for electrically connecting the plug **28** to the primary coil **20**. For example, the flexible leads **34** may simply be a pair of wires or may be a more complicated set of traces on a flexible circuit board substrate. The connector section **30** may be overmolded with a flexible material that protects the connector section **30** while still allowing a high degree of flexibility.

[0054] The coil assembly **32** of the illustrated embodiment generally includes a coil **20**, a magnet **26** and an overmold **36**. In one embodiment, the coil **20** is a spiral-round coil of Litz wire. The size, shape and configuration of the coil **20** may vary from application to application depending in part on the amount of power to be transmitted. For example, the diameter of the coil **20**, the number of turns of wire in the coil **20** and the size of the wire used to form the coil **20** may vary based on the specific application. If desired, the coil assembly **32** may include a magnet **26**. The magnet **26** may be located at the center of the coil **20** and may provide a way to assist in aligning the coil **20** with the secondary coil **22** in a remote device. The magnet **26** may also assist in holding the coil assembly **32** in a folded configuration for storage (See FIG. **5**). The coil assembly **32** may be overmolded for protection and/or for aesthetic reasons. The coil assembly **32** may alternatively be housed in essentially any suitable housing. The overmold or housing **33** may be contoured to correspond in shape with the intended wireless device. This may assist in providing close alignment between the primary coil **20** and the secondary coil **22**, and may help to retain the wireless device D in place on the coil assembly **32**.

[0055] An alternative detachable wireless power transmitter **14** is shown in FIG. **7**. In this embodiment, the detachable wireless power transmitter **14** is essentially identical to the embodiment shown in FIG. **6**, except that it is shielded. As shown, a shield **38** is disposed in the coil assembly **32** beneath the coil **20**. The shield **38** allow a wireless device D placed on top of the transmitter **14** to receive power, while reducing electromagnet interference and other problems that may be caused by stray electromagnetic field lines. The size, shape and configuration of the shield may vary from application to application, as desired. For example, the shielding material, the diameter of the shielding material and the thickness of the shielding material may vary to provide the desired balance between cost and shielding performance.

[0056] In the embodiment shown in FIGS. **6** and **7**, the power supply circuitry (not shown) is included in the housing **12**. Alternatively, portions of the power supply circuitry may be incorporated into the detachable wireless power transmitters **14**. For example, if desired, the DC/DC rectifier, microcontroller, drivers or switching circuits may be integrated into the detachable wireless power transmitter **14** instead of within the housing **12** of the power adapter **13**. In one embodiment, the wireless transmitter port may supply a high DC rail output from the AC/DC rectifier to the wireless power transmitter **14**, and the wireless power transmitter may include a DC/DC converter, a microcontroller (with an integrated or separate driver) and a switching circuit. This approach may offer more variety in the power supply characteristics available from detachable wireless power transmitters **14** as each one can be designed with the appropriate circuit components rather than relying on multi-channel components.

[0057] FIG. **8** shows another alternative embodiment of the power supply **10**. In this embodiment, the power supply **10** generally includes an integrated wireless power transmitter **14**, a plurality of wireless transmitter ports **18** for selectively attaching wireless power transmitters **14** and a plurality of power outlet ports **16** for supplying power to wired devices. The integrated wireless power transmitter **14** permits at least one wireless device to receive power without the need for attaching a detachable wireless power transmitter. However, if it is desirable to wirelessly charge more than a single wireless device, additional detachable wireless power transmitters may by connected to the power adapter **13**, as desired. In this embodiment, the power supply **10** may include a plurality of different power outlet ports **16**. The different power outlet ports **16** may provide different amounts of power to allow power supply to a broader range of wired devices. To facilitate correct attachment of wired devices, the different power outlet ports **16** may have different plug configurations for different amounts of power. For example, in the illustrated embodiment, the power outlet ports **16** may include two conventional USB ports **40**, a circular port **42** and a trapezoidal port **44**.

[0058] FIG. **9** shows the power supply **10** of FIG. **8** with an alternative detachable wireless power transmitter **14** configured for use with larger wireless devices, such as laptop L. In this embodiment, the detachable wireless power transmitter **14** is essentially identical to the detachable wireless power transmitter **14** of FIG. **6**, except that it includes a longer connector section **30** and a larger support surface **31** housing the coil assembly **32**. The support surface **31** of this embodiment is configured to provide a wide support for devices that might teeter on a smaller support. In this embodiment, the coil **20** (along with any desired magnet or shielding) is disposed in a relatively thin, rectangular support surface **31**. The support surface **31** may be overmolded onto the coil or the coil **20** may be inserted into a cavity in a premanufactured support surface. Although FIG. **9** shows a single primary coil **20** located in the center of the support, the number and position of primary coils **20** may vary from application to application.

[0059] FIG. **10** is a schematic representation of a circuit suitable for supplying power to the power supply of FIG. **3**. The power supply **10** includes an AC/DC rectifier **60** for converting the AC power received from the AC mains into DC power. The power supply **10** also includes a dual-channel DC/DC step down converter **62** for converting the DC output of the AC/DC rectifier **60** to the desired level. The dual-channel converter **62** includes two different outputs—one for the power output port **16** and one for the wireless power transmitter **14**. In applications where additional levels of DC power are required, the DC/DC step down converter may include a multiple-channel DC/DC step down converter or multiple step down converters. The power supply **10** also includes a microcontroller **64** and a switching circuit **66**. The microcontroller **64** is programmed to control the switching circuit **66** to generate the appropriate AC power for the coil **20**. In this embodiment, the microcontroller **64** also controls operation of the dual-channel converter **62**. For example, the microcontroller **64** may send control signals to the dual-channel converter **62** specifying the level of the DC power being supplied to the switching circuit **66**. The microcontroller **64** may determine the appropriate DC power level based on signals received from the wireless device. These signals may be communicated from the wireless device to the power supply **10** by reflected impedance or through a separate communications systems, such as a separate inductive coupling, infrared communications, WiFi communications, Bluetooth communications or other communication schemes. The microcontroller **64** may follow essentially any of a wide variety of inductive power supply control algorithms. In some

embodiments, the microcontroller **64** may vary one or more characteristics of the power applied to the coil **20** based on feedback from the portable device D. For example, the microcontroller **64** may adjust the resonant frequency of the tank circuit (e.g. the coil and capacitor combination), the operating frequency of the switching circuit **66**, the rail voltage applied to the coil **20** or the duty cycle of the power applied to coil **20** to affect the efficiency or amount of power inductively transferred to the portable device D. A wide variety of techniques and apparatus are known for controlling operation of an inductive power supply. For example, the microcontroller may be programmed to operate in accordance with one of the control algorithms disclosed in U.S. Pat. No. 6,825,620, which is entitled "Inductively Coupled Ballast Circuit" and issued Nov. 30, 2004, to Kuennen et al; the adaptive inductive power supply of U.S. Pat. No. 7,212,414, which is entitled "Adaptive Inductive Power Supply" and issued May 1, 2007, to Baarman; the inductive power supply with communication of U.S. Ser. No. 10/689,148, which is entitled "Adaptive Inductive Power Supply with Communication" and filed on Oct. 20, 2003 to Baarman; the inductive power supply for wirelessly charging a LI-ION battery of U.S. Ser. No. 11/855,710, which is entitled "System and Method for Charging a Battery" and filed on Sep. 14, 2007 by Baarman; the inductive power supply with device identification of U.S. Ser. No. 11/965,085, which is entitled "Inductive Power Supply with Device Identification" and filed on Dec. 27, 2007 by Baarman et al; or the inductive power supply with duty cycle control of U.S. Ser. No. 61/019,411, which is entitled "Inductive Power Supply with Duty Cycle Control" and filed on Jan. 7, 2008 by Baarman—all of which are incorporated herein by reference in their entirety.

[0060] Although the schematic shows only a single power outlet port **16**, the number of power outlet ports **16** may be increased to the desired number. For example, to implement the power supply **10** of FIG. **3**, the power supply **10** may include four power output ports **16**.

[0061] For purposes of disclosure, FIG. **10** also shows a wireless electronic device D positioned adjacent to the power adapter **13**. The wireless electronic device D generally includes a wireless power receiver **80**, an AC/DC rectifier **70**, a microcontroller **74**, a battery **76** and a load **78**. The wireless power receiver **80** of this embodiment may be a secondary coil **22**. The secondary coil **22** is configured to inductively receive power from the primary coil **20** in the power supply **10**. In the illustrated embodiment, the secondary coil **20** is a split-winding, spiral-wound coil of wire. The size, shape and configuration of the secondary coil **22** may be selected to correspond with the characteristics of the primary coil **20**. Although the wireless power receiver **80** of this embodiment is a coil, the wireless device may include other forms of wireless power receivers. The secondary coil **22** is electrically coupled to the AC/DC rectifier **70**. AC power generated in the secondary coil **22** passes into the rectifier **70** where it is converted to DC power. The rectifier **70** may be configured to scale the DC power to the appropriate level or the microcontroller **74** may include a DC/DC converter for adjusting the output of the rectifier **70** before applying it to the battery **76** or the load **78**. The secondary microcontroller **74** may follow essentially any of a wide variety of inductive power supply control algorithms. In some embodiments, the secondary microcontroller **74** may send communications to the primary microcontroller **64** that permit the primary microcontroller **64** to vary one or more characteristics of the power applied to the coil **20**. For example, the secondary microcontroller **74** may send communication signals indicative of the amount of power being received from the primary coil **20** or indicating whether more or less power is required. A wide variety of techniques and apparatus are known for controlling operation of an inductive power supply in the wireless electronic device. For example, the secondary microcontroller may be programmed to operate in accordance with one of the control algorithms disclosed in U.S. Pat. No. 6,825,620, which is entitled "Inductively Coupled Ballast Circuit" and issued Nov. 30, 2004, to Kuennen et al; the adaptive inductive power supply of U.S. Pat. No. 7,212,414, which is entitled "Adaptive Inductive Power Supply" and issued May 1, 2007, to Baarman; the inductive power supply with communication of U.S. Ser. No. 10/689,148, which is entitled "Adaptive Inductive Power Supply with Communication" and filed on Oct. 20, 2003 to Baarman; the inductive power supply for wirelessly charging a LI-ION battery of U.S. Ser. No. 11/855,710, which is entitled "System and Method for Charging a Battery" and filed on Sep. 14, 2007 by Baarman; the inductive power supply with device identification of U.S. Ser. No. 11/965,085, which is entitled "Inductive Power Supply with Device Identification" and filed on Dec. 27, 2007 by Baarman et al; or the inductive power supply with duty cycle control of U.S. Ser. No. 61/019,411, which is entitled "Inductive Power Supply with Duty Cycle Control" and filed on Jan. 7, 2008 by Baarman—all of which are incorporated herein by reference in their entirety.

[0062] The circuitry may vary from application to application to provide power to the desired number of wireless power transmitters and power outlet ports. For example, FIG. **11** shows an alternative circuit in which the power supply **10** includes a single power output port **16** and a pair of integrated wireless power transmitters **14**. In this embodiment, the power supply **10** includes a multi-channel DC/DC step down converter **92** that is capable of providing a variety of different DC power outputs. In the illustrated embodiment, the multi-channel converter **92** is capable of providing three different DC power outputs—one for the power output jack, one for the first primary coil and one for the second primary coil. In this embodiment, the microcontroller **94** controls operation of the switching circuits **96** and may also direct the multi-channel converter **92** to individually set the DC power level based on signals from the wireless device. For example, if the wireless device needs more power, it may send an appropriate signal to the microcontroller **94** and the microcontroller **94** may direct the multi-channel converter **92** to increase the DC power output to the corresponding switching circuit **96**. On the other hand, if less power is required, the wireless device may send an appropriate signal to the microcontroller **94** and the microcontroller **94** may direct the multi-channel converter **92** to decrease the DC power output to the corresponding switching circuit **96**.

[0063] FIG. **12** shows a schematic diagram representing a circuit suitable for use with the power supply of FIG. **8**. In this embodiment, the power supply **10** supplies power to one integrated wireless power transmitter **14**, four power output ports **16** and four wireless power transmitter ports **18**. As with the previously described embodiments, the circuit includes an AC/DC rectifier **60** for converting the AC power received from the AC mains into DC power, a multiple-channel DC/DC step down converter **100** for converting the DC output of the AC/DC rectifier **60** to a plurality of DC outputs, a microcontroller **98** for controlling operation of the power

supply **10**, a plurality of switching circuits **104** for controlling the application of power to the integrated and detachable wireless power transmitters **14** and a plurality of drivers **102** for controlling the timing of the switching circuits **104**. The microcontroller **98** is programmed to control both the DC/DC converter and the drivers **102**. With regard to the DC/DC converter, the microcontroller **98** may send control signals to the DC/DC converter **100** to individually dictate the levels of the different DC power outputs for the power outlet ports **16** and/or the wireless power transmitters **14**. With this functionality, the microcontroller **98** can individually adjust the DC output of the power output ports **16** to accommodate a wider variety of wired electronic devices. The DC outputs for the wireless power transmitters **14** function as the rail voltage for the switching circuits **104**. Accordingly, the microcontroller **98** can individually adjust the power output of the wireless power transmitters **14** by individually adjusting the DC outputs for the wireless power transmitters **14**. In application where this functionality is not desired, the DC/DC converter output levels for the power output ports **16** and the wireless power transmitters **14** can be fixed. With regard to the drivers **102**, the microcontroller **98** can adjust the timing of the drivers **102** to vary the timing of the switching circuits **104**. This can, in turn, be used to adjust the operating frequency and/or duty cycle of the power applied to the wireless power transmitters **14**. As noted above, the microcontroller **98** may operate the wireless power transmitters **14** in accordance with a wide variety of control schemes. For example, the microcontroller **98** may adjust the rail voltage of the power applied to the primary coil **20**, the operating frequency of the wireless power transmitters or the duty cycle of the appropriate DC power level based on information relating to the power level desired by the wireless device and/or the efficiency of the inductive coupling with the wireless device. As another example, each wireless power transmitter **14** may be contained in a tank circuit (e.g. the subcircuit containing the coil **20** and the resonant capacitor **21** (which may be located in the power adapter **13** or one of the plug in coil modules or wireless transmitters **14**), and the microcontroller may be configured to adjust the resonant frequency of the tank circuit to allow the tank circuit to operate efficiently through a broader range of operating frequencies. The microcontroller may adjust the resonant frequency of the tank circuit by adjusting the inductance and/or capacitance of the tank circuit. The inductance may be adjusted using a variable inductor or a bank of inductors that may be switched into or out of the tank circuit. Similarly, the capacitance may be adjusted using a variable capacitor or a bank of capacitors that may be switched into or out of the tank circuit.

[0064] In a second aspect, the present invention provides a power supply **510** that can be adapted to provide different wireless power supply configurations. In the embodiment shown in FIGS. **13** and **14**, the power supply **510** includes two wireless power transmitters **514** located in different sections **512** of the power adapter **513**. The two section **512** are joined to one another along a hinge **517** so that they may be pivoted to change the position and orientation of the two power transmitters with respect to one another. FIG. **13** shows the power adapter **13** being unfolded into a flat configuration that provides two side-by-side charging regions. FIG. **14** shows how two wireless electronic devices D can be placed on the two side-by-side power transmitters **514**. In this embodiment, the power adapter **513** includes two housing sections **512**. The power supply circuitry may be incorporated into one or both of the housing sections. In one embodiment, a single multichannel circuit is provided for supplying power to both wireless power transmitters. In another embodiment, separate power supply circuits are provided for each wireless power transmitter. The hinge **517** is configured to allow the passage of electrical leads from one housing section **512** to the other housing section **512**. For example, the bulk of the power supply circuitry may be located in one housing section **512** and electrical leads passing through the hinge **517** may deliver power to the primary coil **20** in the second housing section **512**.

[0065] FIG. **15** shows a first alternative embodiment of the second aspect of the present invention. In this embodiment, power supply **510** includes two sections that are coupled together at rotating joint. A separate wireless power transmitter **514** is located in each section **512**. The two sections **512** can be rotated into different positions to vary the position and orientation of the two wireless power transmitters **514**. For example, FIG. **16** includes a series of illustrations that show one of the two sections being increasingly rotated with respect to the other until the coil of one of the wireless power transmitters **514** is rotated 180 degrees. In the initial position, the power supply **510** can be used to wirelessly supply power to two adjacent wireless devices placed on top of the power adapter **513**. In the rotated position, the power supply **510** can be used to wirelessly supply power to two wireless devices placed on opposite sides of the power adapter **513**. Although a wide variety of connectors may be used to join the two sections **512**. For example, in one embodiment, the connector may be generally tubular and may include a central bore for routing wiring from one section to the other. In an alternative embodiment, the connector **520** may create an electrical connection between the two sections **512**, such as is the case with the connector illustrated in FIG. **17**. As with the embodiment of FIG. **14**, the power supply circuitry may be incorporated into one or both of the housing sections, and a single multichannel power supply circuit or separate independent circuits may be use to supply power to the wireless power transmitters.

[0066] FIGS. **18**A-E show various charging configurations of the power supply **10** of FIG. **15**. FIG. **18**A shows a single wireless device D placed over and receiving power from one of the two coils **522**. FIG. **18**B shows two wireless devices D—each placed over and receiving power from a separate coil **522**. FIG. **18**C shows a single wireless device D placed over and receiving power from both coils **522**. In this embodiment, the wireless device D includes two secondary coils **524** so that the device D can simultaneously receive power from two primary coils **522**. FIGS. **18**D and **18**E show the power supply **10** reconfigured with the two coils **522** on opposite sides of the power adapter **513**. In FIG. **18**D, separate wireless devices D are placed on opposite sides of the power adapter **513** to receive power from opposite coils **522**. In FIG. **18**E, the power adapter **513** is placed on a wireless-enabled surface **526**. In this embodiment, a wireless device D may be placed over and receive power from the upward facing coil, while the downward facing coil **522** supplies power to a secondary coil mounted in the surface **526**.

[0067] Another potential application for the power supply **10** of FIG. **15** is shown in FIGS. **19** and **20**. In this embodiment, a laptop computer L includes a power supply notch **528** configured to receive the outer section of the power adapter **513**. As shown in FIG. **20**, the power supply notch **528** may be sized and shaped to closely receive the outer section **512**. In

this embodiment, the inner section **512** can support and provide power to a wireless device D.

[0068] FIG. **21** shows a wireless computer dock C configured to receive the wireless power supply **510** of FIG. **15**. In this embodiment, the computer support surface defines a channel **530** adapted to receive the power adapter **513**. The channel **530** may be longer than the adapter **513** so that the adapter **513** can be slid along the channel to vary the position of the coils **522** beneath the laptop L. In this embodiment, the laptop L may include two secondary coils (not shown) to receive power from both primary coils **522**. Alternatively, the power adapter **13** may be positioned so that one coil is beneath the laptop L and the other extend past the edge of the laptop L to potentially provide power to another wireless device (not shown).

[0069] FIG. **22** shows a computer bag B configured to receive the wireless power supply **10** of FIG. **15**. In this embodiment, the computer bag B includes a central flap **532** with a pocket **534** to receive the power adapter **513**. The power supply **510** may be configured so that the primary coils face in the same or opposite directions. In the current embodiment, the pocket **534** is positioned to hold the power adapter **513** in a position where it can supply power to a laptop L placed on one side of the flap **532** and to a wireless device D placed on the other side of the flap **532**. In alternative embodiments, the pocket may be placed elsewhere in the bag. For example, the pocket may be oriented horizontally and located in one of the bag walls. In such an embodiment, the middle flap of the bag may be eliminated.

[0070] FIG. **23** shows an alternative power supply **510** in which multiple wireless power transmitters **514** maybe attached to a single power supply. In this embodiment, the principle circuitry of the power supply **510** is contained in the power adapter **513**. The wireless power transmitters **514** are provided in modules **514** that can be added to the power adapter **513** as desired. For example, as shown in FIG. **23**, each module **513** may include a male connector **520** and one or more female connectors (not shown). The male and female connectors may be positioned as desired. For example, each module **514** may include a male connector **520** extending from the center of one side and three female connectors centered on the other three sides. In this embodiment, the male connector **520** allows a module **514** to be secured to the power adapter **513** or to another module **514**. The modules **514** may be daisy-chained to build almost any arrangement of primary coils. Although a wide variety of connectors maybe used to join the modules **514**, FIG. **17** shows end and side views of one potential male connector for joining adjacent modules. In this embodiment, the connector **514** is a two conductor connector in which an upper contact **540** and a lower contact **542** are separated by an insulator **544**. Although not shown, the female connector includes two contacts that separately engage the upper contact **540** and the lower contact **542**. A snap-fit catch, such as a spring-loaded bearing, may be used to secure the male connector with the female connector. The bearing is configured to snap fit into the channel around the insulator when the male connector is fitted properly into the female connector. The bearing may be manufactured from a non-conductive material to so that it does not create a short circuit between the upper contact and the lower contact.

[0071] Another embodiment of a power supply in accordance with a second aspect of the present invention is shown in FIGS. **24** and **25**. In this embodiment, the power supply **510** includes a power adapter **513** with a plurality of folding arms that contain the wireless power transmitters **514**. As shown, the power adapter **513** may include a central section **515** that contains the bulk of the power supply circuitry (not shown). Four folding sections **512** may be hingedly coupled to the central section **515** using hinges **550**. In this embodiment, two folding sections **512** may be foldable onto the top surface of the central section **515** and two folding sections **552** may be foldable under the bottom surface of the central section (See FIG. **25**). In the illustrated embodiment, a separate wireless power transmitter **514** (e.g. a primary coil) is disposed within each folding section **512**. The folding sections **512** may be unfolded to provide a relatively large charging arrangement or folded to provide compact storage.

[0072] FIGS. **26** and **27** show another embodiment of a power supply in accordance with a second aspect of the present invention. In this embodiment, the power supply **510** includes a power adapter **513** with a plurality of folding arms that contain the wireless power transmitters **514**. As shown, the power adapter **513** may include a central section **515** that contains the bulk of the power supply circuitry (not shown). Three coil assemblies **562** may be coupled to the central section **515** by flexible connector sections **564**. All three coil assemblies **562** may be foldable onto the top surface of the central section **515** in a stacked configuration (See FIG. **27**, which shows two of the three coil assemblies folded onto the central section **515**). If desired, a magnet (not shown) may be disposed within each coil assembly **562**. The magnets may help align the coils when a wireless device is place over a coil assembly. Plus, the magnets may help to hold the coil assemblies **562** in the stacked configuration. The coil assemblies **562** may be fixedly coupled to the central section or they may be detachably coupled using the plugs and ports as described in previously described embodiments.

[0073] FIGS. **29** and **30** show another embodiment of a power supply in accordance with a second aspect of the present invention. In this embodiment, the power supply **510** includes a power adapter **513** with a thin panel that slides out to fit under a laptop L. The thin panel **600** includes a coil **20**. In one embodiment, the coil **20** is a spiral-round coil of Litz wire. The size, shape and configuration of the coil **20** may vary from application to application depending in part on the amount of power to be transmitted. For example, the diameter of the coil **20**, the number of turns of wire in the coil **20** and the size of the wire used to form the coil **20** may vary based on the specific application. If desired, the panel **600** may include a magnet **26**. The panel could include essentially any or all of the power supply circuitry. Alternatively, some or all of the power supply circuitry could be included in the power adapter **513**, except for coil **20**. In one embodiment, a coil assembly, as described in previous embodiments, is included in the panel and power supply circuitry is included in the power adapter. The panel **600** may be contoured to correspond in shape with the intended wireless device. In the current embodiment, the panel presents a thin structure capable of fitting under a slot provided in the Laptop L. This may assist in providing close alignment between the primary coil **20** and the secondary coil **22**, and may help to retain the laptop L in place on the coil **20**. The panel may be selectably retractable from the power adapter **513** so that when the coil is not in use the panel may be placed in a retractable position. In some embodiments, the panel may be locked in the retractable position. In its retracted position, the power adapter **513** of the current embodiment is similar to the FIG. **3** embodiment. Although not illustrated, in alternative embodiments, wired

power connectors could be included in the power adaptor. There may be an electrical connection between the power adapter and the power circuitry in the panel that is maintained when the panel is extended or retracted. For example, there may be sufficient slack in a wire so that when the panel is extended the electrical connection between the coil or power supply circuitry in the panel is maintained with the power supply circuitry in the power adapter. In one embodiment, the wall cord itself has sufficient slack to maintain electrical connection directly to the power supply circuitry in the panel.

[0074] FIGS. **31** and **32** show yet another embodiment of a power supply in accordance with a second aspect of the present invention. In this embodiment, the power supply **510** includes a power adapter **513** with a thin panel **602** that rotates or fans out to an extension position. Just as in the retractable panel embodiment, the panel **602** includes a coil **20**. In one embodiment, the coil **20** is a spiral-round coil of Litz wire. The size, shape and configuration of the coil **20** may vary from application to application depending in part on the amount of power to be transmitted. For example, the diameter of the coil **20**, the number of turns of wire in the coil **20** and the size of the wire used to form the coil **20** may vary based on the specific application. If desired, the panel **602** may include a magnet **26**. The panel **600** may be contoured to correspond in shape with the intended wireless device. In the current embodiment, the panel presents a thin structure capable of fitting under a slot provided in the Laptop L. The panel may be selectably rotatable between a variety of different positions. In one position, the panel may be locked in a home position where the power adapter **513** of the current embodiment is configured similarly to the FIG. **3** embodiment. Although not illustrated, in alternative embodiments, wired power connectors could be included in the power adapter. As with the retractable embodiment, any combination of power supply circuitry may be included in the panel and or adapter. Further, there may be an electrical connection between the power adapter and the panel that is maintained when the panel is extended or retracted. For example, there may be sufficient slack in a wire between the panel and the power adapter so that when the panel is extended the electrical connection between the coil or power supply circuitry in the panel is maintained with the power supply circuitry in the power adapter. In one embodiment, the wall cord itself has sufficient slack to maintain electrical connection directly to the power supply circuitry in the panel.

[0075] The circuitry of the power supply **10** may vary from application to application. A wide variety of circuits and circuit components suitable for wirelessly supplying power from the power supply to a wireless device D are known to those skilled in the art. For purposes of disclosure, and not by way of limitation, one suitable circuit is described in connection with FIG. **28**. FIG. **28** is a schematic of a power supply circuit for wirelessly supplying power to two separate wireless power transmitters **14**. In this embodiment, the wireless power transmitters are primary coils **20** configured to generate an electromagnetic field in response to the application of a varying supply of power. The power supply circuitry generally includes an AC/DC rectifier **60** for converting the AC power received from the AC mains into DC power. The power supply **10** also includes a dual-channel DC/DC step down converter **65** for converting the DC output of the AC/DC rectifier **60** to the desired level. The dual-channel DC/DC converter **62** has the ability to provide two DC outputs at different power levels. The power supply **10** also includes a dual microcontroller **94** and a pair of switching circuits **96**. The dual microcontroller **94** is capable of separately operating each pair of switching circuits **96** so that the power supplied by the two primary coils **20** can be independently adapted to the corresponding wireless device D. The dual microcontroller **94** is programmed to send control signals to the dual-channel DC/DC converter to set the power level of the DC outputs. The dual microcontroller is also programmed to control the two switching circuits **96** to generate the appropriate AC power for the two coils **20**. For example, the dual microcontroller can control the timing of the switches to vary the operating frequency and/or duty cycle of the signals applied to the two primary coils. As with previously described embodiment of the power supply circuit, the dual microcontroller **94** of this embodiment may follow essentially any of a wide variety of inductive power supply control algorithms. In some embodiments, the dual microcontroller **94** may vary one or more characteristics of the power applied to a coil **20** based on feedback from the corresponding portable device D. For example, the dual microcontroller **94** may adjust resonant frequency, operating frequency, rail voltage or duty cycle to affect the efficiency or amount of power inductively transferred to the corresponding portable device D. A wide variety of techniques and apparatus are known for controlling operation of an inductive power supply. For example, the dual microcontroller may be programmed to operate in accordance with one of the control algorithms disclosed in U.S. Pat. No. 6,825,620, which is entitled "Inductively Coupled Ballast Circuit" and issued Nov. 30, 2004, to Kuennen et al; the adaptive inductive power supply of U.S. Pat. No. 7,212,414, which is entitled "Adaptive Inductive Power Supply" and issued May 1, 2007, to Baarman; the inductive power supply with communication of U.S. Ser. No. 10/689,148, which is entitled "Adaptive Inductive Power Supply with Communication" and filed on Oct. 20, 2003 to Baarman; the inductive power supply for wirelessly charging a LI-ION battery of U.S. Ser. No. 11/855,710, which is entitled "System and Method for Charging a Battery" and filed on Sep. 14, 2007 by Baarman; the inductive power supply with device identification of U.S. Ser. No. 11/965,085, which is entitled "Inductive Power Supply with Device Identification" and filed on Dec. 27, 2007 by Baarman et al; or the inductive power supply with duty cycle control of U.S. Ser. No. 61/019,411, which is entitled "Inductive Power Supply with Duty Cycle Control" and filed on Jan. 7, 2008 by Baarman—all of which are incorporated herein by reference in their entirety. Although the embodiment of FIG. **28** includes a dual microcontroller, the dual microcontroller may be replaced by separate microcontrollers for each wireless power transmitter.

[0076] FIG. **28** also shows schematic representations of the circuitry in a pair of wireless electronic devices D. As shown, each device D is positioned adjacent to a different primary coil **20**. In this embodiment, the circuits of the two devices D are essentially identical. Accordingly, only one will be described in detail. The wireless electronic devices D generally include a wireless power receiver **22**, an AC/DC rectifier **70**, a microcontroller **74**, a battery **76** and a load **78**. The wireless power receiver **22** of this embodiment may be a secondary coil **22**. The secondary coil **22** is configured to inductively receive power from the primary coil **20** in the power supply **10**. The size, shape and configuration of the secondary coil **22** may be selected to correspond with the characteristics of the primary coil **20**. Although the wireless power receiver **22** of this embodiment is a coil, the wireless

device may include other forms of wireless power receivers. The secondary coil **22** is electrically coupled to the AC/DC rectifier **70**. AC power generated in the secondary coil **22** passes into the rectifier **70** where it is converted to DC power. The rectifier **70** may be configured to scale the DC power to the appropriate level or the microcontroller **74** may include a DC/DC converter for adjusting the output of the rectifier **70** before applying it to the battery **76** or the load **78**. The secondary microcontroller **74** may follow essentially any of a wide variety of inductive power supply control algorithms. In some embodiments, the secondary microcontroller **74** may send communications to the primary microcontroller **94** that permit the primary microcontroller **94** to vary one or more characteristics of the power applied to the coil **20**. For example, the secondary microcontroller **74** may send communication signals indicative of the amount of power being received from the primary coil **20** or indicating whether more or less power is required. A wide variety of techniques and apparatus are known for controlling operation of an inductive power supply in the wireless electronic device. For example, the secondary microcontroller may be programmed to operate in accordance with one of the control algorithms disclosed in U.S. Pat. No. 6,825,620, which is entitled "Inductively Coupled Ballast Circuit" and issued Nov. 30, 2004, to Kuennen et al; the adaptive inductive power supply of U.S. Pat. No. 7,212,414, which is entitled "Adaptive Inductive Power Supply" and issued May 1, 2007, to Baarman; the inductive power supply with communication of U.S. Ser. No. 10/689,148, which is entitled "Adaptive Inductive Power Supply with Communication" and filed on Oct. 20, 2003 to Baarman; the inductive power supply for wirelessly charging a LI-ION battery of U.S. Ser. No. 11/855,710, which is entitled "System and Method for Charging a Battery" and filed on Sep. 14, 2007 by Baarman; the inductive power supply with device identification of U.S. Ser. No. 11/965,085, which is entitled "Inductive Power Supply with Device Identification" and filed on Dec. 27, 2007 by Baarman et al; or the inductive power supply with duty cycle control of U.S. Ser. No. 61/019,411, which is entitled "Inductive Power Supply with Duty Cycle Control" and filed on Jan. 7, 2008 by Baarman—all of which are incorporated herein by reference in their entirety.

[0077] Although not shown, power supplies in accordance with a second aspect of the present invention may include power outlet ports for providing power to wired electronic devices WD. For example, the power supplies of FIGS. **13-27** may be modified to include power outlet ports. The number, location and specifications of the power outlet ports may vary from application to application.

[0078] Referring to FIG. **33**, one embodiment of a multi-input wireless power supply **10**. The depicted embodiment includes an AC/DC rectifier circuit **61** capable of accepting a first input voltage or a second input voltage. In alternative embodiments, the AC/DC rectifier circuit **61** may be capable of accepting additional input voltages. The input voltages can be DC or AC. The input voltages can be a variety of different levels. For example, in the depicted embodiment, the AC/DC rectifier can accept 110VAC or 220VAC. In alternative embodiments, the AC/DC rectifier might accept 110VAC, 220VAC, 19VDC, or 5VDC. The AC/DC rectifier produces a rectified output. Where a DC input voltage is supplied, the rectifier has little to no effect on the signal, but a rectified DC output is still provided.

[0079] In addition to the AC/DC rectifier **61**, in the current embodiment a low power DC/DC step down converter **63** is provided in order to supply power to a microcontroller. The size of the DC/DC step down converter is kept small because only a small amount of power is needed in order to power a microcontroller, typically only a few microwatts. It may be possible in some embodiments to eliminate the DC/DC converter if the circuit does not require a small DC power source, for example if the microcontroller is powered by a battery or if the circuit is designed with analog components instead of a microcontroller.

[0080] The multi-input wireless power supply also includes a sensor for detecting which of the first input voltage and the second input voltage is connected to the multi-input wireless power supply. In the current embodiment, the sensor is included in the AC/DC rectifier circuit. In alternative constructions, the sensor may be a separate component or may be integrated into the microcontroller or another component. In embodiments with more than two input voltages, the sensor may be capable of determining which input voltage of a plurality of different input voltages is connected. In the current embodiment, the sensor is a voltage sensor, but in alternative constructions a current sensor, or another type of sensor that can reliably indicate which source voltage is connected to the wireless power supply could be used. In the current embodiment, the rectified voltage is being sensed in the AC/DC rectifier circuit, in alternative embodiments, the pre-rectified voltage may be sensed, of course the programming in the controller would need to be modified accordingly.

[0081] The multi-input wireless power supply also includes a plurality of switching circuits **96**, **97** each coupled to the rectified output from the AC/DC rectifier. That is, the output from the rectifier circuit **61** is coupled directly to the switching circuit **96**, **97** without first being stepped down with a step down converter. In the current embodiment, the switching circuits are rated for whichever of the first input voltage and the second input voltage is higher. In embodiments capable of accepting more than two different input voltages, the switching circuits may be rated for the highest input voltage. In systems that can accept multiple input voltages instead of having all switches be rated for the highest input voltage, there may be a single switch rated for the highest input voltage and additional switching circuits that are only capable of being in the electrical path once the microcontroller has determined that the input voltage is below the rating of that switching circuit.

[0082] The current embodiment of the multi-input wireless power supply also includes two tank circuits or wireless power transmitters **14**, **15**. Alternative embodiments may include additional tank circuits. Each tank circuit is designed to provide wireless power to a remote device where the tank circuit components are selected based at least as a function of the amount of DC voltage that is being provided to the switching circuit associated with that tank circuit. For example, if the tank circuit is to receive 165VDC (that is 110VAC, rectified), the characteristics of the inductor **20** and capacitor **21** in the tank circuit **14** are selected such that an appropriate amount of power will be transmitted to a remote device placed proximate to the tank circuit. Different tank circuit components are used for different input voltages. That is, the tank circuit components for different input voltages such as 19VDC, 5VDC, or 308VDC (220VAC, rectified) are all selected/designed separately in order to provide a target amount of power to the remote device. In the current embodiment, the first tank circuit **14** is coupled to one of the plurality of the switching circuits **96**. A second tank circuit **15** is

coupled to a different one of the plurality of the switching circuits **97**. The characteristics of the second tank circuit are selected for transferring power to the remote device as a function of the second input voltage. That is, the shape, size, and characteristics of the inductor **23** and the capacitor **25** in the tank circuit are selected based on the second input voltage, just as the shape, size, and characteristics of the inductor **20** and capacitor **21** of the first tank circuit **14** were selected based on the first input voltage. In the current embodiment, the characteristics of the second tank circuit **14** are different from the characteristics of the first tank circuit **15**. In the depicted embodiment, both tank circuits are designed to accept a high DC rail voltage that has not been stepped down by a DC/DC converter. One advantage of the current embodiment is that a relatively bulky DC/DC converter is unnecessary and may be eliminated from the circuit design.

[0083] In addition, the multi-input wireless power supply may be designed to provide different amounts of wireless power. In some embodiments, the multi-input wireless power supply may be dynamic and adjust the amount of power to be provided to the remote device based on operating frequency adjustment of the switching circuit, duty cycle adjustment of the switching circuit, rail voltage adjustment, or any other characteristic that may affect the amount of power to be transferred. A number of these techniques are discussed in the references previously incorporated by reference and mentioned above.

[0084] The multi-input wireless power supply may also include a microcontroller **95** coupled to the low power DC/DC converter and the switching circuits. The microcontroller is programmed to control the plurality of switching circuits based on output from the sensor, which indicates which input source is connected. In the most simple embodiment, the rectified voltage is provided to all of the switching circuits, but only the switching circuit coupled to the tank circuit designed for that particular input voltage (or input voltage range) is operated. In other embodiments, the AC/DC rectifier circuit may include a switch or multiplexer so that the rectified voltage is only provided to the DC/DC step down converter and the appropriate switching circuit. In some embodiments, it may be possible to include an array of tank circuits/switching circuits for each potential input voltage or input voltage range.

[0085] Instead of a multi-input wireless power supply that has the ability to operate with multiple inputs, a single input high DC rail wireless power supply may be designed such that it produces an electromagnetic field similar to the electromagnetic filed produced by a single input low DC rail wireless power supply. That is, a single input wireless power supply may be designed without a high power DC/DC converter so that the DC rectified voltage is used by a switching circuit to generate an AC signal across a tank circuit specifically designed to produce an electromagnetic field similar to the filed that would be produced by a wireless power supply that uses a low DC rail voltage to generate an electromagnetic field.

[0086] In particular, in one embodiment of the present invention, a method for designing a high DC rail wireless power supply is provided. The method includes providing a low DC rail wireless power supply including an AC/DC rectifier for generating a high DC rail voltage, a DC/DC converter for stepping down the high DC rail voltage into a low DC rail voltage. Providing a switching circuit for switching the low DC rail voltage to generate an AC signal and providing a tank circuit coupled to the AC signal for generating an electromagnetic field. The method includes selecting components based on the low DC rail wireless power supply. In particular, the method includes selecting an AC/DC rectifier for generating a high DC rail voltage, selecting a switching circuit rated for switching the high DC rail voltage, selecting a tank circuit having characteristics for generating an electromagnetic field similar to the electromagnetic field produced by the low DC rail wireless power supply in response to the high DC rail voltage.

[0087] The above description is that of current embodiments of the invention. Various alterations and changes can be made without departing from the spirit and broader aspects of the invention.

1. A universal power supply capable of supplying power to both wired and wireless electronic devices, the universal power supply comprising:

power supply circuitry;

one or more wireless power transmitters configured to provide wireless power to a remote device, wherein said one or more wireless power transmitters are in electrical connection with said power supply circuitry; and

one or more power outlet ports configured to provide wired power to a remote device, wherein said one or more power outlet ports are electrically connected to said power supply circuitry.

2. The universal power supply of claim **1**, wherein said one or more wireless power transmitters are detachable wireless power transmitters, wherein said universal power supply includes one or more power outlets configured to receive said one or more detachable wireless power transmitters.

3. The universal power supply of claim **2**, wherein said one or more power outlets configured to provide wired power have a different plug shape than said one or more power outlets configured to receive said one or more removable wireless power transmitters.

4. The universal power supply of claim **1** wherein said universal power supply includes a housing, wherein said one or more wireless power transmitters and said one or more power outlet ports are disposed in said housing.

5. The universal power supply of claim **1** wherein said one or more wireless power transmitters are connected to said power adapter by flexible connectors that permit said universal power supply to be folded up to reduce size.

6. The universal power supply of claim **1** wherein power supply circuitry is located in either said power adapter housing, incorporated into said one or more detachable wireless power transmitters, or a combination thereof.

7. The universal power supply of claim **1** wherein at least one of said one or more wireless transmitters is capable of being received by a power supply notch of a laptop computer.

8. A universal wireless power supply comprising:

a power adapter including a power adapter housing having one or more power outlets disposed therein; and

one or more detachable wireless power transmitters configured to provide wireless power to a remote device, wherein said one or more wireless power transmitters are detachably connectable to said power outlets of said power adapter, wherein each of said one or more wireless power transmitters includes a plug, a connector section, and a coil assembly.

9. The universal wireless power supply of claim **8** wherein said connector section includes flexible leads that permit each of said one or more wireless power transmitters to be folded up to reduce size.

10. The universal wireless power supply of claim **8** wherein said coil assembly includes a coil, a magnet, and an overmold.

11. The universal power supply of claim **10** wherein said coil assembly includes a shield.

12. The universal power supply of claim **8** wherein power supply circuitry is located in either said power adapter housing, incorporated into said one or more detachable wireless power transmitters, or a combination thereof.

13. The universal power supply of claim **8** wherein at least one of said one or more detachable wireless transmitters is capable of being received by a power supply notch of a laptop computer.

14. The universal wireless power supply of claim **8** wherein at least one of said one or more wireless power transmitters includes one or more power outlet ports for attaching further detachable wireless power transmitters so that said one or more wireless power transmitters are capable of being daisy-chained.

15. A universal wireless power supply comprising:

a plurality of wireless power transmitters; and

a power adapter including power supply circuitry and a housing, wherein said housing is divided into two sections coupled together by a rotating joint, wherein each of said sections includes at least one of said plurality of wireless power transmitters, wherein said two sections are capable of being rotated into different positions to vary the position and orientation of said plurality of wireless power transmitters.

16. The universal wireless power supply of claim **15** wherein said universal wireless power supply is capable of being used to wirelessly supply power to two wireless devices placed on opposite sides of said power adapter.

17. The universal wireless power supply of claim **15** wherein said universal wireless power supply is capable of being used to wirelessly supply power to two wireless devices placed on the same side of said power adapter.

18. The universal wireless power supply of claim **15** wherein said rotating joint includes a generally tubular connector with a central bore for routing wiring between said two sections.

19. The universal wireless power supply of claim **15** wherein said rotating joint includes a connector that creates an electrical connection between said two sections.

20. The universal wireless power supply of claim **15** wherein said plurality of wireless power transmitters power a single wireless device.

21. The universal wireless power supply of claim **15** wherein one section is capable of being received by a power supply notch of a laptop computer and another section of said power adapter is capable of supporting and providing power to a wireless device.

22. The universal wireless power supply of claim **15** wherein said wireless power supply is configured to be received by a pocket in a computer bag, wherein said power supply is positioned within said pocket to supply power to a laptop computer and a wireless device.

23. A universal wireless power supply comprising:

a power adapter; and

a wireless power transmitter configured to provide wireless power to a remote device, wherein said wireless power transmitter is movable with respect to said power adapter.

24. The universal wireless power supply of claim **23** wherein said wireless power transmitter is connected to said power adapter by a flexible connector that permits said universal power supply to be folded up to reduce space.

25. The universal wireless power supply of claim **23** including a plurality of wireless power transmitters, each configured to provide wireless power to a remote device, wherein each of said wireless power transmitters are movable with respect to said power adapter.

26. The universal wireless power supply of claim **25** wherein said wireless power transmitters are foldable into a stacked configuration.

27. The universal wireless power supply of claim **23** wherein said one or more wireless power transmitters are connected to said power adapter by foldable arms that permit said universal power supply to be folded up on to the power adapter to reduce space.

28. The universal wireless power supply of claim **23** wherein said wireless power transmitter is integrated into a panel that moves with respect to said power adapter.

29. The universal wireless power supply of claim **28** wherein said panel slides with respect to said power adapter.

30. The universal wireless power supply of claim **28** wherein said panel rotates with respect to said power adapter.

31. A multi-input wireless power supply comprising:

an AC/DC rectifier circuit capable of accepting a first input voltage or a second input voltage, wherein said AC/DC rectifier produces a rectified output;

a sensor for detecting which of said first input voltage and said second input voltage is connected to said multi-input wireless power supply;

a plurality of switching circuits each coupled to said rectified output;

a first tank circuit coupled to one of said plurality of switching circuits, wherein characteristics of said first tank circuit are selected for transferring power to a remote device as a function of said first input voltage;

a second tank circuit coupled to a different of said plurality of switching circuits, wherein characteristics of said second tank circuit are selected for transferring power to said remote device as a function of said second input voltage, wherein said characteristics of said second tank circuit are different from said characteristics of said first tank circuit;

a low power DC/DC converter coupled to said AC/DC rectifier for converting said rectified output;

a microcontroller coupled to said low power DC/DC converter, wherein said microcontroller is programmed to control said plurality of switching circuits based on output from said sensor.

32. The multi-input wireless power supply of claim **31** wherein said plurality of switching circuits are rated for whichever of said first input voltage and said second input voltage is higher.

33. The multi-input wireless power supply of claim **31** wherein said characteristics of said first tank circuit and said characteristics of said second tank circuit include a number of turns of an inductor, a gauge of wire of an inductor, a coil

diameter of an inductor, an inductance value of an inductor, and a capacitance value of a capacitor.

34. The method of claim **31** wherein the multi-input wireless power supply provides intrinsic safety and high voltage isolation.

35. A method of designing a high DC rail wireless power supply that is interoperable with a low voltage rail wireless power supply, the method comprising:

providing a low DC rail wireless power supply including an AC/DC rectifier for generating a high DC rail voltage, a DC/DC converter for stepping down said high DC rail voltage into a low DC rail voltage, a switching circuit for switching said low DC rail voltage to generate an AC signal, and a tank circuit coupled to said AC signal for generating an electromagnetic field;

selecting an AC/DC rectifier for generating a high DC rail voltage;

selecting a switching circuit rated for switching said high DC rail voltage;

selecting a tank circuit having characteristics for generating an electromagnetic field similar to said electromagnetic field produced by said low DC rail wireless power supply in response to said high DC rail voltage.

36. The method of claim **35** wherein selecting the tank circuit includes at least one of selecting a number of turns of an inductor, selecting a gauge of wire in an inductor, selecting a coil diameter of an inductor, selecting an inductance value of an inductor, and selecting a capacitance value of a capacitor.

37. The method of claim **35** wherein the method of designing a high DC rail wireless power supply provides intrinsic safety and high voltage isolation.

* * * * *