US008305951B1

(12) **United States Patent**
Breau et al.

(10) **Patent No.: US 8,305,951 B1**
(45) **Date of Patent: Nov. 6, 2012**

(54) **CONDITIONAL MEDIA ACCESS CONTROL ADDRESS FILTERING**

(75) Inventors: **Jeremy R. Breau**, Leawood, KS (US); **Jason R. Delker**, Olathe, KS (US); **Manish Mangal**, Overland Park, KS (US); **Mathew Oommen**, Overland Park, KS (US)

(73) Assignee: **Sprint Communications Company L.P.**, Overland Park, KS (US)

(*) Notice: Subject to any disclaimer, the term of this patent is extended or adjusted under 35 U.S.C. 154(b) by 399 days.

(21) Appl. No.: **12/687,872**

(22) Filed: **Jan. 14, 2010**

(51) **Int. Cl.**
H04H 20/71 (2008.01)

(52) **U.S. Cl.** **370/312**

(58) **Field of Classification Search** 370/310, 370/312, 315, 328, 338; 709/220, 223, 230, 709/231

See application file for complete search history.

(56) **References Cited**

U.S. PATENT DOCUMENTS

6,115,385	A *	9/2000	Vig	370/401
6,393,484	B1	5/2002	Massarani	
6,424,650	B1	7/2002	Yang et al.	
7,283,525	B2 *	10/2007	Burgess et al.	370/392
7,693,132	B1 *	4/2010	Cooper et al.	370/352
7,768,963	B2 *	8/2010	Alizadeh-Shabdiz	370/328
7,929,538	B2 *	4/2011	Gobara et al.	370/392
7,933,268	B1 *	4/2011	Melman et al.	370/389
7,961,646	B2 *	6/2011	Liu et al.	370/254
8,127,162	B2 *	2/2012	Satoh	713/322
2006/0245403	A1 *	11/2006	Kumar	370/338
2008/0101363	A1 *	5/2008	Li	370/390
2008/0235358	A1 *	9/2008	Moribe et al.	709/220
2009/0228732	A1 *	9/2009	Budde et al.	713/400
2010/0020796	A1 *	1/2010	Park et al.	370/390
2010/0211665	A1 *	8/2010	Raza et al.	709/223

OTHER PUBLICATIONS

"Address Resolution Protocol", Wikipedia, the free encyclopdia, http://en.wikipedia.org/w/index.php? title=Address_Resolution_Protocol&printable=yes, Sep. 30, 2009.

"Extensible Authentication Protocol", Wikipedia, the free encyclopdia, http://en.wikipedia.org/w/index.php? title=Extensible_Authentication_Protocol&printable=yes, Sep. 30, 2009.

* cited by examiner

Primary Examiner — Chi Pham
Assistant Examiner — Robert Lopata

(57) **ABSTRACT**

A system is provided comprising processor, memory, radio transceiver, and an application. The transceiver receives a first message containing a first source media access control address and a first destination address and associated with a first application type and receives a second message containing a second source address and second destination address and associated with the first application type, wherein the first and second destination addresses are associated with first and second members, respectively, of a physical wireless local area network. The application receives the first message, determines that the first message is associated with the first application type, confirms that the first source address is associated with the first application type, and based on the confirmation sends the first message to the first destination. The application receives the second message, determines the second address is not associated with the first application type, and does not forward the second message.

20 Claims, 5 Drawing Sheets

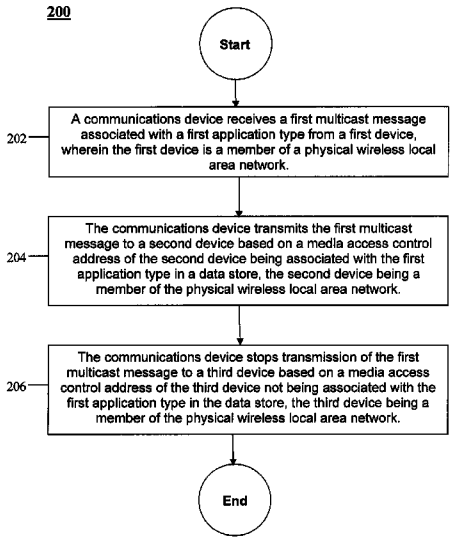

SAMSUNG EXHIBIT 1055

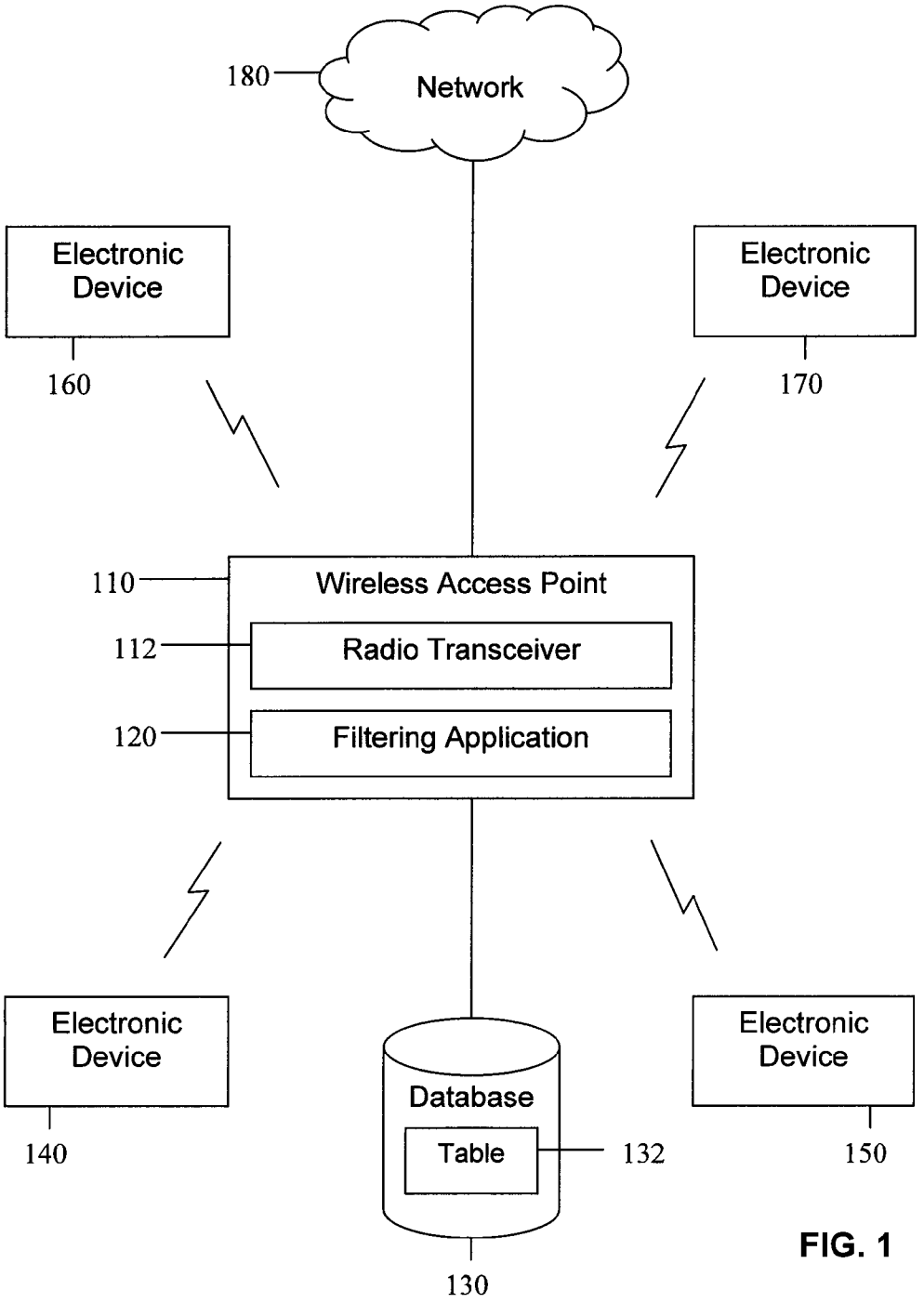
100
180
Network
Electronic Device
160
Electronic Device
170
110
Wireless Access Point
112
Radio Transceiver
120
Filtering Application
Electronic Device
140
Database
Table
132
130
Electronic Device
150

FIG. 1

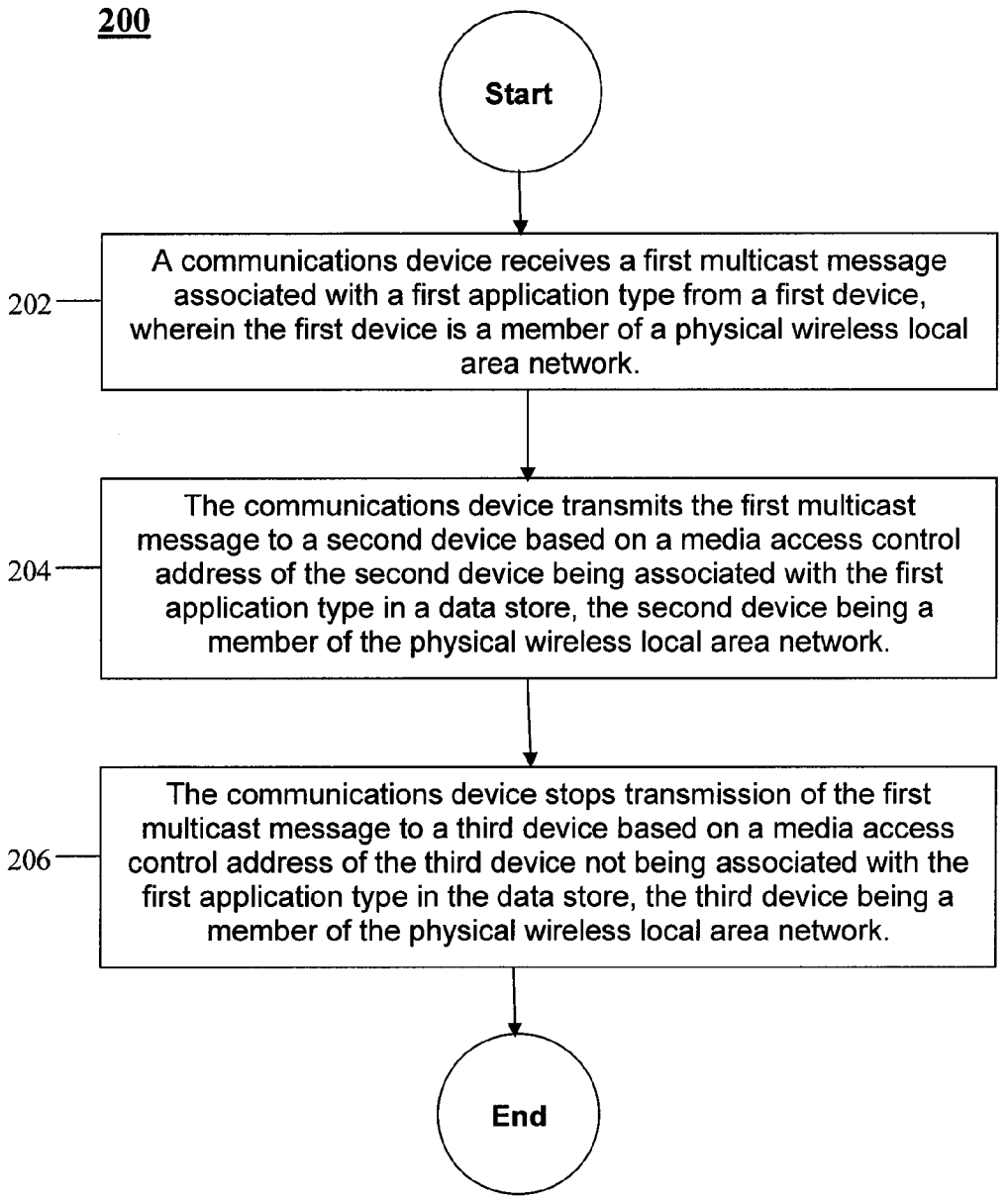
200
Start
202
A communications device receives a first multicast message associated with a first application type from a first device, wherein the first device is a member of a physical wireless local area network.
204
The communications device transmits the first multicast message to a second device based on a media access control address of the second device being associated with the first application type in a data store, the second device being a member of the physical wireless local area network.
206
The communications device stops transmission of the first multicast message to a third device based on a media access control address of the third device not being associated with the first application type in the data store, the third device being a member of the physical wireless local area network.
End

FIG. 2

FIG. 3

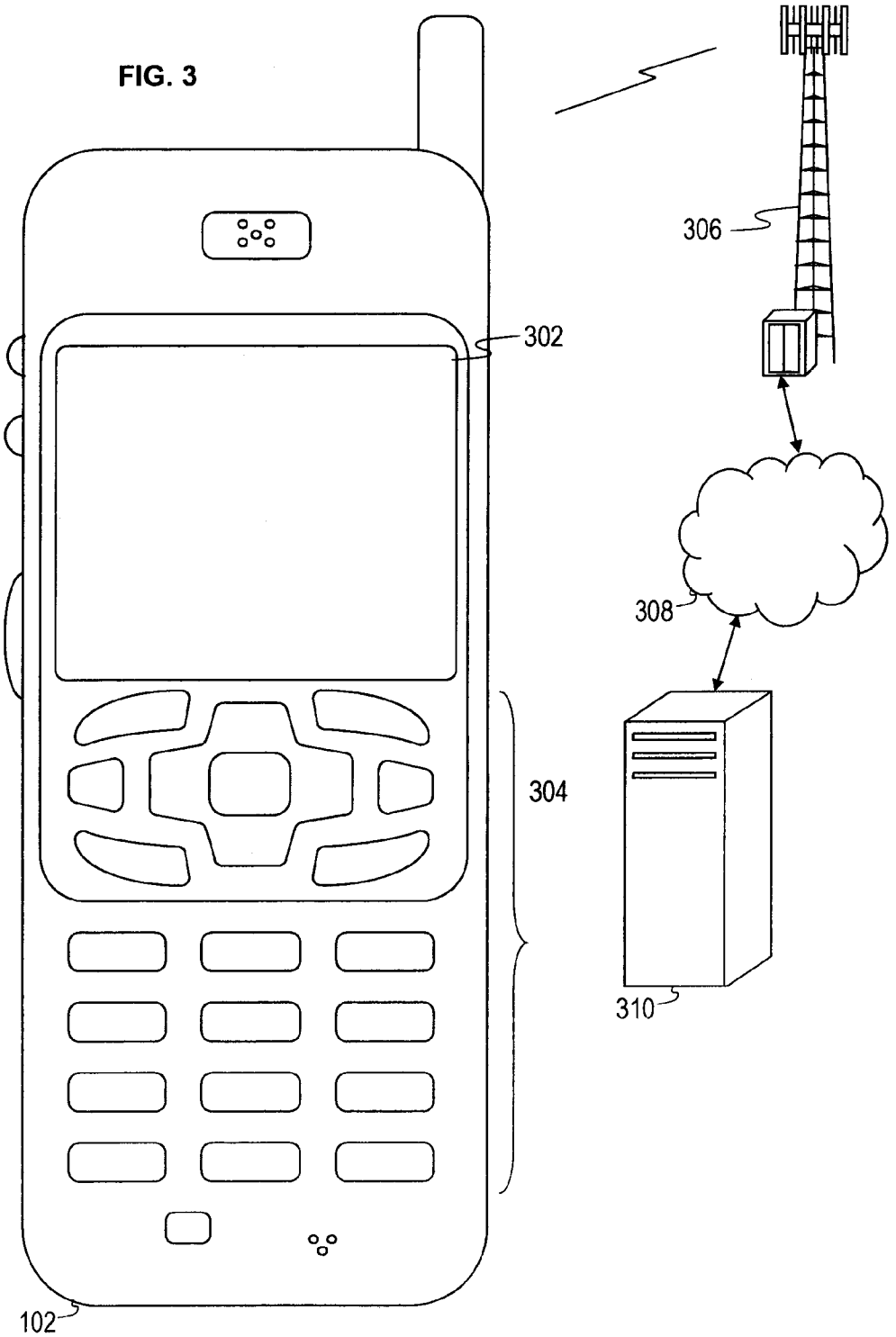

FIG. 4

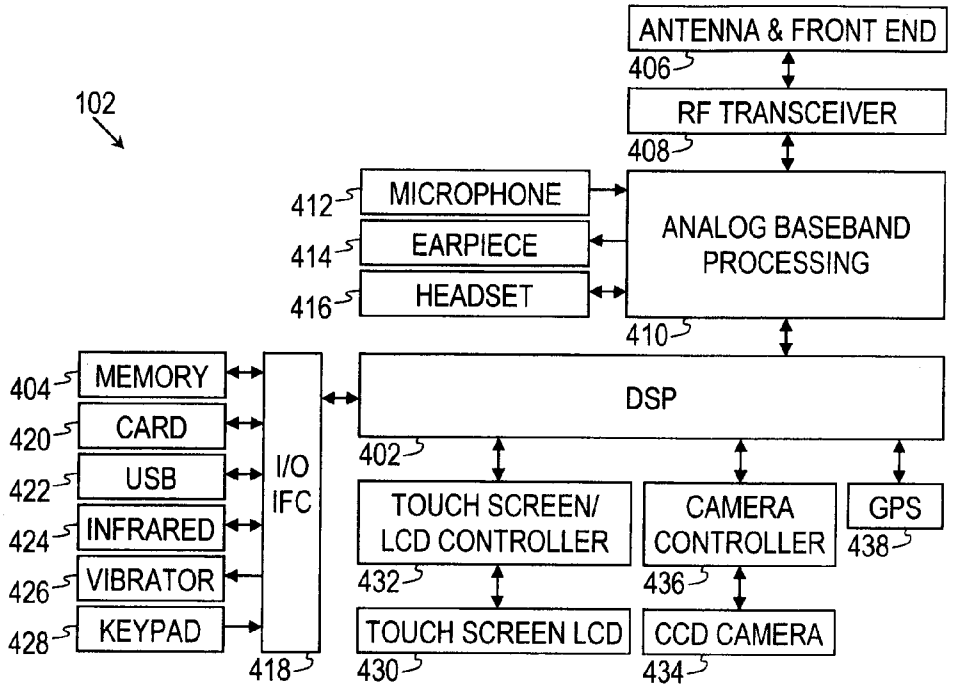
102
ANTENNA & FRONT END
406
RF TRANSCEIVER
408
412
MICROPHONE
414
EARPIECE
416
HEADSET
ANALOG BASEBAND PROCESSING
410
404
MEMORY
420
CARD
422
USB
424
INFRARED
426
VIBRATOR
428
KEYPAD
I/O IFC
418
DSP
402
TOUCH SCREEN/ LCD CONTROLLER
432
CAMERA CONTROLLER
436
GPS
438
TOUCH SCREEN LCD
430
CCD CAMERA
434

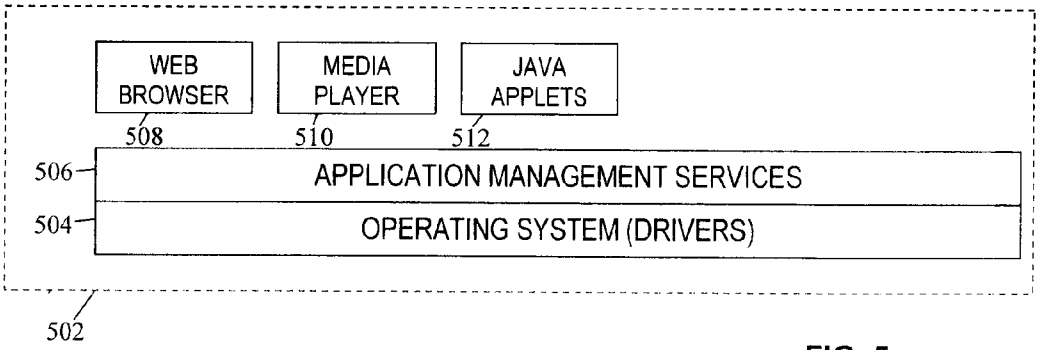
WEB BROWSER
508
MEDIA PLAYER
510
JAVA APPLETS
512
506
APPLICATION MANAGEMENT SERVICES
504
OPERATING SYSTEM (DRIVERS)
502

FIG. 5

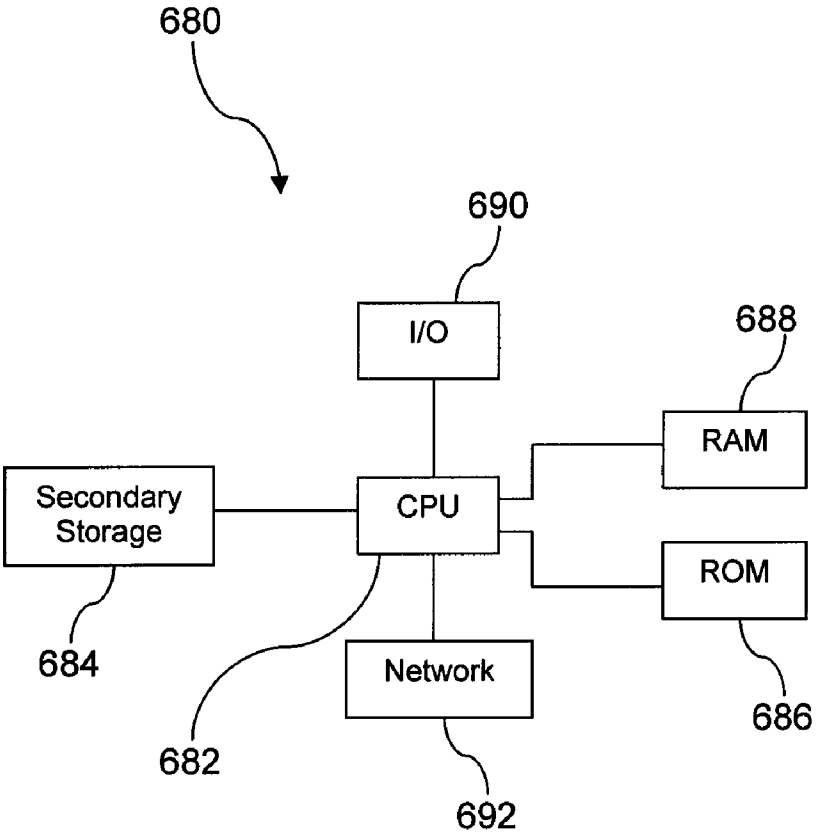
680
690
I/O
688
RAM
Secondary Storage
CPU
ROM
684
Network
686
682
692

FIG. 6

CONDITIONAL MEDIA ACCESS CONTROL ADDRESS FILTERING

CROSS-REFERENCE TO RELATED APPLICATIONS

None.

STATEMENT REGARDING FEDERALLY SPONSORED RESEARCH OR DEVELOPMENT

Not applicable.

REFERENCE TO A MICROFICHE APPENDIX

Not applicable.

BACKGROUND

Electronic devices on wireless or wired networks exchange messages in packets containing control information, instructions, and data payloads. Some packets are structured to be delivered to specific destinations while other packets may be associated with less reliable broadcast or multicast services. Encapsulation permits logically separate functions in a network to be abstracted from their underlying structures by inclusion of information concealed within higher level objects. The more abstract layers are often called the upper layer protocols and provide application and presentation services while the layers more specific to hardware and message exchange may be called lower layer protocols. The transmission control protocol/internet protocol (TCP/IP) suite, for example, uses encapsulation to provide abstraction of protocols and services at several levels, with the lower or link level containing hardware addressing and frame information, the internet and transport levels providing session and connection services, and the application level containing data payload.

SUMMARY

In an embodiment, a communication system is provided comprising a processor, a memory storing information associating a first media access control (MAC) address to a first application type, and a radio transceiver that receives a first message containing a first source media access control address and a first destination media access control address and associated with a first application type. The radio transceiver receives a second message containing a second source media access control address and a second destination media access control address and associated with the first application type, wherein the first destination media access control address is associated with a first member of a physical wireless local area network and the second destination media access control address is associated with a second member of the physical wireless local area network. The system also comprises an application stored in the memory that, when executed by the processor, receives the first message from the radio transceiver, analyzes the first message to determine that the first message is associated with the first application type, accesses the memory to confirm that the first source media access control address is associated with the first application type, and based on the confirmation sending the first message to the radio transceiver to transmit to the first destination media access control address. The application also receives the second message from the radio transceiver, analyzes the second message to determine that the second message is associated with the first application type, determines by accessing the memory that the second source media access control address is not associated with the first application type, and based on the negative determination not forwarding the second message to the radio transceiver to transmit.

In an embodiment, a processor-implemented method of communication is provided. The method comprises receiving a first multicast message associated with a first application type from a first device, wherein the first device is a member of a physical wireless local area network. The method also comprises transmitting the first multicast message to a second device based on a media access control address of the second device being associated with the first application type in a data store, the second device being a member of the physical wireless local area network. The method comprises stopping transmission of the first multicast message to a third device based on a media access control address of the third device not being associated with the first application type in the data store, the third device being a member of the physical wireless local area network.

In an embodiment, a wireless access point is provided comprising a processor and a memory storing information associating a first application type to a first media access control (MAC) address and a second media access control address and associating a second application type to the first media access control address and a third media access control address, wherein the first media access control address is associated with a first member of a physical wireless local area network, the second media access control address is associated with a second member of the physical wireless local area network, and the third media access control address is associated with a third member of the physical wireless local area network. The wireless access point also comprises a radio transceiver and an application stored in the memory that, when executed by the processor, receives a first message from the radio transceiver, the first message being a multicast message and associated with the first application type and sends the first message to the radio transceiver for transmission to the first media access control address based on the information associating the first media access control address to the first application type. The wireless access point also sends the first message to the radio transceiver for transmission to the second media access control address based on the information associating the second media access control address to the first application type. The wireless access point does not send the first message to the radio transceiver for transmission to the third media access control address.

These and other features will be more clearly understood from the following detailed description taken in conjunction with the accompanying drawings and claims.

BRIEF DESCRIPTION OF THE DRAWINGS

For a more complete understanding of the present disclosure, reference is now made to the following brief description, taken in connection with the accompanying drawings and detailed description, wherein like reference numerals represent like parts.

FIG. **1** is a block diagram of a system according to an embodiment of the disclosure.

FIG. **2** is a flow chart illustrating a method according to an embodiment of the disclosure.

FIG. **3** is an illustration of a mobile device according to an embodiment of the disclosure.

FIG. **4** is a block diagram of a mobile device according to an embodiment of the disclosure.

FIG. **5** is a block diagram of a software architecture for a mobile device according to an embodiment of the disclosure.

FIG. **6** illustrates an exemplary computer system suitable for implementing some aspects of the several embodiments of the disclosure.

DETAILED DESCRIPTION

It should be understood at the outset that although illustrative implementations of one or more embodiments are illustrated below, the disclosed systems and methods may be implemented using any number of techniques, whether currently known or in existence. The disclosure should in no way be limited to the illustrative implementations, drawings, and techniques illustrated below, but may be modified within the scope of the appended claims along with their full scope of equivalents.

The present disclosure teaches a communication system that conditionally filters messages transmitted on a wireless local area network based on the media access control address of at least one of the source electronic device and the receiving electronic device. A filtering application associated with a wireless access point on the network examines the hardware or media access control addresses of the source and destination devices and further examines the application layer header of messages to determine the type of application associated with the message. For some applications, no address filtering takes place because all packet transmissions are permitted for the applications regardless of source and destination devices. For other applications, however, the filtering application consults a database table to determine whether the source device is permitted to send messages associated with the application and/or determine whether the destination device is permitted to receive messages associated with the application. The present disclosure teaches the creation of a plurality of virtual application local area networks by segmenting a single physical wireless local area network according to media access control addresses of electronic devices either permitted or denied access to some applications. Filtering application-related messages by media access control address of sending and/or receiving device may effectively enforce application access permissions.

Conditional filtering of messages is based on the application type and the media access control addresses of the sending and/or receiving electronic devices. The media access control addresses and network addresses of the electronic devices are not altered by the filtering application. When the filtering application determines from examining the table that a received message should not be forwarded to at least one destination device because either the source or destination device was marked as not authorized, the filtering application may block outgoing ports on the wireless access point to prevent the message from being sent. The message that is prohibited by the entry in the database table is not delivered and may be discarded.

The present disclosure teaches a plurality of electronic devices sending and receiving messages on a wireless local area network operating in infrastructure mode wherein electronic devices may exchange messages through the wireless access point instead of directly with each other. Electronic devices may be members of media local area networks and communicate using the simple service discovery protocol in multicast transmissions. In an example, the filtering application may be configured to block simple service discovery protocol multicast transmissions to certain electronic devices while permitting such transmissions to other electronic devices. The filtering application may at the same time not filter any packets when, for example, the application involved is a hypertext transport protocol (HTTP) application. Each electronic device has its own physical or virtual port on the wireless access point that may be blocked by the filtering application when directed by an entry in the database table. Every packet that is received by the communication system, regardless of its associated media access control address, may be directed to specific devices that are associated with the wireless access point by blocking some ports and opening others. This capability associated with application types permits the creation of a plurality of virtual application local area networks among electronic devices in a single physical wireless local area network.

Turning now to FIG. **1**, a system **100** of conditional media access control address filtering is described. The system **100** comprises a wireless access point **110**, a radio transceiver **112**, a filtering application **120**, a database **130**, a table **132**, electronic devices **140**, **150**, **160**, **170**, and a network **180**. In examples discussed herein, the electronic device **140** may be referred to as the first electronic device **140**, the electronic device **150** may be referred to as the second electronic device **150**, the electronic device **160** may be referred to as the third electronic device **140**, and the electronic device **170** may be referred to as the fourth electronic device **170**.

The present disclosure teaches a plurality of electronic devices **140**, **150**, **160**, **170** in a wireless local area network (WLAN) functioning in infrastructure mode wherein the electronic devices **140**, **150**, **160**, **170** may communicate directly with the wireless access point **110** in a virtual hub and spoke arrangement. The wireless access point **110** may provide a central wireless connection point for the electronic devices **140**, **150**, **160**, **170** that may not communicate directly with each other. The wireless access point **110** may provide connectivity to the network **180** for the electronic devices **140**, **150**, **160**, **170**, for example to the Internet. The wireless access point **110** also comprises the radio transceiver **112** permitting the wireless access point **110** to send and receive wireless signals to and from the electronic devices **140**, **150**, **160**, **170**, and other devices.

The filtering application **120** may execute on the wireless access point **110** or on a device associated with the wireless access point **110**. The filtering application **120** receives a plurality of wireless messages from the radio transceiver **112** sent by the electronic devices **140**, **150**, **160**, **170**. The filtering application **120** also forwards a plurality of wireless messages to destination electronic devices **140**, **150**, **160**, **170**, and other destination devices through the radio transceiver **112**. The filtering application **120** analyzes the packet content of the received messages and determines the applications, application types, media types, and/or file types associated with the messages. The filtering application **120** may examine the media access control address of the electronic device **140** sending the message and may examine the media access control address of the electronic device **150** designated as recipient of the message. The filtering application **120** may consult the table **132** stored in the database **130** to determine if an application or an application type invoked in the message is subject to filtering. If so, the filtering application **120** may further consult the table **132** to determine if the media access control addresses of either the sending electronic device **140** or the receiving electronic device **150** are listed among those to be denied access to the application or type of application.

The filtering application **120** may automatically forward all traffic associated with an application to destination electronic devices **140**, **150**, **160**, **170** without filtering. The filtering application **120** may forward traffic associated with other applications or application types only to specific electronic devices **140**, **150**, **160**, **170**. When the radio transceiver **112** operating on the wireless access point **110** receives a

wireless transmission from an electronic device **140**, the filtering application **120** analyzes the packet structure of the incoming transmission. The filtering application **120** examines the media access control address of the electronic device **140** that originated the message to establish the identity of the sending electronic device **140**. The filtering application **120** further analyzes the message to determine the application type being invoked by the message and any electronic devices **150**, **160**, **170**, Internet Protocol (IP) address(es), or other device(s) or address(es) described as destination(s) for the message.

The present disclosure teaches filtering of incoming messages by media access control address of sending electronic device **140** and/or by destination electronic device **150** conditioned by the application type invoked. The application type invoked may be identifiable by the upper layer protocol used, for example, the simple service discovery protocol (SSDP) or the hypertext transfer protocol (HTTP), or may be identifiable in another manner. When the filtering application **120** determines that a specific application type is invoked in the message, it may consult the table **132** in the database **130** to discover the media access control addresses of electronic devices **140**, **150**, **160**, **170** that are permitted to send and/or receive messages involving the application. When the application in the message is not listed in the table **132**, the filtering application **120** may disregard any further information in the table **132** and forwards the message on to its specified destination(s) in accordance with the addressing in the message. The filtering application **120** may block transmissions and discard packets originated by an electronic device **140** that is not authorized to send packets for applications shown in the table **132**.

The filtering application **120**, in addition to filtering packets conditioned on application or upper layer protocol used and originating electronic device **140**, also filters packets by application and destination electronic device **150**. When the filtering application **120** engages the wireless access point **112** to forward packets, the filtering application **120** may determine that some electronic devices **150**, **160**, **170** have been listed in the table **132** as specifically those that should be denied receipt of the packets. The filtering application **120** may cause one or more physical or virtual ports on the wireless access point **112** to be blocked and thereby stop the identified destination electronic devices **150**, **160**, **170** from receiving the packets. While the wireless access point **112** may receive and transmit the packets as broadcast messages, the filtering application **120** uses the table **132** to determine potential destination electronic devices **150**, **160**, **170** that should be specifically denied receipt of packets for some applications. The ports on the wireless access point **112** to those electronic devices **150**, **160**, **170** are blocked while the message is being transmitted through the ports of the devices permitted to receive the message.

Electronic devices **140**, **150**, **160**, **170** on a wireless local area network may send a variety of types of packets. Some electronic devices **140**, **150**, **160**, **170** may be members of one or more media local area networks, such as a network that may observe the digital living network alliance (DLNA) standard, wherein the simple service discovery protocol is the default protocol used in multicast transmissions. While some electronic devices **140**, **150**, **160**, **170** may have the capability to send, receive, and understand packets using a plurality of communication protocols, there may be devices with which the electronic devices **140**, **150**, **160**, **170** communicate that are limited in their ability to understand protocols. A media local area network in a home, for example, may include devices, such as televisions, picture frame devices, and household appliances that may only process simple service discovery protocol multicasts. The same media local area network may also include several electronic devices **140**, **150** that may, for example, be powerful personal computers running a plurality of applications with network adapters installed and capable of communicating over the Internet with distant destinations. The wireless access point **110** may itself be a member of at least one media local area network and may receive broadcast, multicast, and unicast traffic from a plurality of electronic devices **140**, **150**, **160**, **170** and other devices that may or may not be members of the media local area network(s) of which the wireless access point **110** is a member.

When the wireless access point **110** receives a message via its associated radio transceiver **112**, the filtering application **120** analyzes the message based in part on the application layer header of the message. The application layer header identifies the type of application involved in the message. For example, the application layer header may identify the application protocol as one of the hypertext transfer protocol (HTTP), the file transfer protocol (FTP), or the simple network management protocol (SNMP). When electronic devices **140**, **150**, **160**, **170** are members of media local area networks, the application layer header or other upper-level layer of messages transmitted by these devices may identify the simple service discovery protocol. The filtering application **120**, upon reading the application layer header of messages, examines the table **132** in the database **130** to determine if the application type named in the application layer header is included in the table **132**, thereby indicating that media access control address filtering may be appropriate. If so, the filtering application **120** consults the table **132** to determine if the sending and/or receiving electronic devices **140**, **150**, **160**, **170** are included in the table **132** as either permitted or denied source or destination devices. The filtering application **120** then blocks messages originated from electronic devices **140**, **150**, **160**, **170** that are shown in the table **132** as not authorized to send messages associated with the application type. The filtering application **120** additionally blocks messages addressed to electronic devices **140**, **150**, **160**, **170** that are shown in the table **132** as not authorized to receive messages associated with the application type.

The radio transceiver **112** may, for example, receive a first message containing a first source media access control address from the first electronic device **140** and may receive a second message containing a second source media access control address from the second electronic device **150**. Both messages designate the same application type in their application layer headers and both messages are intended for a third electronic device **160**. In this example, the first message comprises a simple service discovery protocol message. The filtering application **120** may examine the table **132** and in the example determines that the media local area application invoked in both messages is included in the list of applications wherein the table **132** should be further examined for filtering of source and destination electronic devices **140**, **150**, **160**. The filtering application **120** then examines the table and in the example determines that the first electronic device **140** is associated with the application but the second electronic device **150** is not associated with the application. Based on these determinations, the filtering application **120** sends the first message to the radio transceiver **112** for its forwarding to the destination third electronic device **160**. The filtering application **120** does not forward the second message to the third electronic device **160** and may discard the packets associated with the second message. The filtering application **120** may alternatively forward both messages but at about the

same time block the port on the wireless access point **110** to the third electronic device **160** when the second message is being sent, effectively discarding the second message.

In some contexts, the first electronic device **140**, the second electronic device **150**, and the third electronic device **160** may be referred to as a first member, a second member, and a third member of a physical wireless local area network, respectively. A first application is associated with the media access control addresses of the first electronic device **140** and the second electronic device **150**. A second application is associated with the media access control addresses of the first electronic device **140** and the third electronic device **160**. The associations of the applications with the electronic devices **140**, **150**, **160** would be described in the table **132** in the database **130**.

In the example, the radio transceiver **112** receives a first message associated with the first application. The first message is a multicast message. The filtering application **120** receives the first message from the radio transceiver **112** and determines from examining the table **132** that filtering of media access control addresses applies with the first application. The filtering application **120** further determines from the table **132** that the first electronic device **140** and the second electronic device **150** should receive the first message but the third electronic device **160** should not receive the first message. Because the first message was received as a multicast message, the filtering application **120** may cause the first message to be forwarded as a multicast message, i.e. the first message is not somehow altered to exclude the third electronic device **160**. Instead, the filtering application **120** blocks the port on the wireless access point **110** associated with the third electronic device **160**. When the first message is forwarded by the wireless access point **110**, it reaches the first electronic device **140** and the second electronic device **150** but does not reach the third electronic device **160** because its port on the wireless access point **110** was blocked.

Continuing with the example, the radio transceiver **112** then receives a second message associated with the second application. Like the first message, the second message is a multicast message. The filtering application **120** receives the second message from the radio transceiver **112** and determines from examining the table **132** that filtering of media access control addresses also applies with the second application as it did with the first application. The filtering application **120** further determines from the table **132** that the first electronic device **140** and the third electronic device **160** should receive the second message but the second electronic device **150** should not receive the second message. Because the second message was received as a multicast message, the filtering application **120** may cause the second message to be forwarded as a multicast message, similar to what took place with the first message. Instead, the filtering application **120** blocks the port on the wireless access point **110** associated with the second electronic device **150**. When the second message is forwarded, it reaches the first electronic device **140** and the third electronic device **160** but does not reach the second electronic device **150** because its port on the wireless access point **110** was blocked.

Continuing with the example, the filtering application **120** further receives a third message from the radio transceiver **112**. The third message is a multicast message and is associated with a third application type. In this example, the third application type is a hypertext transport protocol (HTTP) application type. The filtering application **120** consults the table **132** as it did with the first message and the second message and determines that the table **132** does not require filtering for the hypertext transport protocol application type. The filtering application **120** sends the third message to the radio transceiver **112** for transmission to the first electronic device **140**, the second electronic device **150**, and the third electronic device **160**. No ports on the wireless access point **110** are blocked.

The discussion herein regarding filtering by media access control address describes the denial of the electronic device **140** receipt of a message as the closing or blocking of the virtual or physical port on the wireless access point **110** associated with the electronic device **140**. In an embodiment, electronic devices **140**, **150**, **160**, **170** may listen for radio frequency signals on a variety of channels during particular time slots or periods, for example, using a form of time division multiplexing. When the time slot associated with electronic device **140** occurs, for example, if the message for the electronic device **140** is to be blocked, nothing is transmitted by the wireless access point **110** during that time slot. In other embodiments, other techniques of blocking a virtual or physical port between the wireless access point **110** and one or more of the electronic devices **140**, **150**, **160**, **170** may be employed.

The filtering application **120** further provides an interface for entering information into the table **132** defining associations between application types and media access control addresses of the physical wireless local area network. The interface also provides a function for adding a guest media access control address to the table **132** to permit a guest device on the physical wireless local area network to access the Internet via the wireless access point **110**.

The network **180** promotes communication between the components of the system **100**. The network **180** may be any communication network including a public data network (PDN), a public switched telephone network (PSTN), a private network, and/or a combination.

The present disclosure teaches the effective creation of a plurality of virtual application local area networks within a single wireless local area network by segmenting the physical wireless local area network based on both an application or application type associated with messages and by the media access control addresses of either source or destination electronic devices **140**, **150**, **160**, **170**. The physical local area network may be segmented for each application by the media access control addresses of each electronic device **140**, **150**, **160**, **170**. For example, a first application may be available to electronic device **140** and **150**, a second application may be available to electronic devices **140** and **160**, and a third application may be available to electronic devices **150** and **160**. The table **132** would contain individual entries for the three applications listing the electronic devices **140**, **150**, **160** permitted access to each application. For a given application, the filtering application **120** filters out messages from electronic devices **140**, **150**, **160**, **170** not permitted access to the application. Filtering effectively creates three different application local area networks within the single wireless local area networks, even though the three application local area network may overlap somewhat in terms of the individual electronic devices **140**, **150**, **160**, **170** that are permitted access to each application.

Turning now to FIG. **2**, a processor-implemented method **200** of communication is provided. Beginning at block **202**, the wireless access point **110** receives a first multicast message associated with a first application type from the first electronic device **140**, wherein the first electronic device **140** is a member of a wireless local area network. The first multicast message comprises a simple service discovery protocol message.

At block **204**, the wireless access point **110** transmits the first multicast message to the second electronic device **150** based on the media access control address of the second electronic device **150** being associated with the first application type in a data store, for example, the table **132** residing in the database **130**. The second electronic device **150** is also a member of the wireless local area network.

At block **206**, the wireless access point **110** stops transmission of the first multicast message to the third electronic device **160** based on the media access control address of the third electronic device **160** not being associated with the first application type in the data store. The third electronic device is also a member of the wireless local area network. In the method **200**, the data store, for example table **132**, describes the first application type as subject to filtering. The data store lists the second electronic device **150** as authorized to receive messages from the first electronic device **140** but further lists the third electronic device **160** as not authorized to receive messages from the first electronic device **140**. The filtering application **120** forwards the first multicast message in the same manner in which it was received but may block or close the physical or virtual port on the wireless access point **110** associated with the third electronic device **160**, effectively denying the third electronic device **160** receipt of the first multicast message.

Expanding upon the discussion of the method **200**, the wireless access point **110** may receive a second multicast message associated with a second application type from the fourth electronic device **170** wherein the fourth electronic device **170** is also a member of the wireless local area network. The wireless access point **110** transmits the second multicast message to the second electronic device **150** and the third electronic device **160** based on the media access control addresses of both destination devices being associated with the second application type in the data store. Whereas the data store or table **132** blocked transmissions of messages to the third electronic device **160** associated with the first application type, the data store permits transmission of messages to the third electronic device **160** when messages are associated with the second application type. The table **132** may list each application type separately and for each listed application type, the table **132** may list electronic devices **140**, **150**, **160**, **170** that are either approved to receive messages or to be denied receipt of messages.

The filtering application **120** defined a first entry in the data store or data table **132** that associated the media access control address of the second electronic device **150** with the first application type. The filtering application **120** defined a second entry in the data store that associated the media access control address of second electronic device **150** with the second application type. The filtering application **120** further defined a third entry in the data store that associated the media access control address of the third electronic device **160** with the second application type.

Expanding further upon the discussion of the method **200**, the filtering application **120** may also define a fourth entry in the data store or data table **132** that identifies the media access control address of the fourth electronic device **170**. The filtering application **120** stops transmission of the first multicast message to the fourth electronic device **170** based on the media access control address of the fourth electronic device **170** not being associated with the first application type in the data store. The data store either lists the fourth electronic device **170** to be specifically denied receipt of messages associated with the first application type or excludes the fourth electronic device **170** from a list of electronic devices **140**, **150** approved for receipt of messages associated with the first application type. The filtering application **120** then receives a message from the fourth electronic device **170** containing a destination internet protocol address outside the wireless local area network. The wireless access point **110** transmits the message from the fourth electronic device **170** to a router outside the wireless local area network. The filtering application **120** may have consulted the table **132** and determined that no filtering is applied to the application being used by the fourth electronic device **170** to contact an address outside the wireless local area network or that filtering does not apply when contacting addresses outside the wireless local area network under any circumstances.

FIG. **3** shows a wireless communications system including a mobile device **102**. FIG. **3** depicts the mobile device **102**, which is operable for implementing aspects of the present disclosure, but the present disclosure should not be limited to these implementations. The mobile device **102** may in some embodiments exemplify the electronic devices **140**, **150**, **160**, **170** described in the system **100**. Though illustrated as a mobile phone, the mobile device **102** may take various forms including a personal computer, a mobile computer, a portable computer, a tablet computer, a laptop computer, and a desktop computer. The mobile device **102** may take various forms with a screen size reduced to a maximum of 4 inches by 6 inches, including a mobile telecommunication device, a mobile handset, a personal digital assistant (PDA), a handheld gaming device, a handheld wireless mobile device, a pager, a digital camera, a digital music player, a digital calculator, and other portable electronic devices. The operator of the portable electronic device may select content formats based on the reduced screen size. Many suitable handsets combine some or all of these functions. In some embodiments of the present disclosure, the mobile device **102** is not a general purpose computing device like a portable, laptop or tablet computer, but rather is a special-purpose communications device such as a mobile phone, wireless handset, pager, or PDA. The mobile device **102** may support specialized activities such as gaming, inventory control, job control, and/or task management functions, and so on.

The mobile device **102** includes a display **302** and a touch-sensitive surface and/or keys **304** for input by a user. The mobile device **102** may present options for the user to select, controls for the user to actuate, and/or cursors or other indicators for the user to direct. The mobile device **102** may further accept data entry from the user, including numbers to dial or various parameter values for configuring the operation of the handset. The mobile device **102** may further execute one or more software or firmware applications in response to user commands. These applications may configure the mobile device **102** to perform various customized functions in response to user interaction. Additionally, the mobile device **102** may be programmed and/or configured over-the-air, for example from a wireless base station, a wireless access point **110**, or a peer mobile device **102**.

The mobile device **102** may execute a web browser application which enables the display **302** to show a web page. The web page may be obtained via wireless communications with a base transceiver station (BTS) **306**, a wireless network access node, a peer mobile device **102**, or any other wireless communication network or system. While a single base transceiver station **306** is illustrated, it is understood that the wireless communication system may comprise additional base transceiver stations. In some instances, the mobile device **102** may be in communication with multiple base transceiver stations **306** at the same time. The base transceiver station **306** (or wireless network access node) is coupled to a wired network **308**, such as the Internet. Via the wireless link and the

wired network, the mobile device **102** has access to information on various servers, such as a server **310**. The server **310** may provide content that may be shown on the display **302**. Alternately, the mobile device **102** may access the base transceiver station **306** through a peer mobile device **102** acting as an intermediary, in a relay type or hop type of connection.

FIG. **4** shows a block diagram of the mobile device **102**. While a variety of known components of handsets **102** are depicted, in an embodiment a subset of the listed components and/or additional components not listed may be included in the mobile device **102**. The mobile device **102** includes a digital signal processor (DSP) **402** and a memory **404**. As shown, the mobile device **102** may further include an antenna and front end unit **406**, a radio frequency (RF) transceiver **408**, an analog baseband processing unit **410**, a microphone **412**, an earpiece speaker **414**, a headset port **416**, an input/output interface **418**, a removable memory card **420**, a universal serial bus (USB) port **422**, an infrared port **424**, a vibrator **426**, a keypad **428**, a touch screen liquid crystal display (LCD) with a touch sensitive surface **430**, a touch screen/LCD controller **432**, a charge-coupled device (CCD) camera **434**, a camera controller **436**, and a global positioning system (GPS) sensor **438**. In an embodiment, the mobile device **102** may include another kind of display that does not provide a touch sensitive screen. In an embodiment, the DSP **402** may communicate directly with the memory **404** without passing through the input/output interface **418**.

The DSP **402** or some other form of controller or central processing unit operates to control the various components of the mobile device **102** in accordance with embedded software or firmware stored in memory **404** or stored in memory contained within the DSP **402** itself. In addition to the embedded software or firmware, the DSP **402** may execute other applications stored in the memory **404** or made available via information carrier media such as portable data storage media like the removable memory card **420** or via wired or wireless network communications. The application software may comprise a compiled set of machine-readable instructions that configure the DSP **402** to provide the desired functionality, or the application software may be high-level software instructions to be processed by an interpreter or compiler to indirectly configure the DSP **402**.

The antenna and front end unit **406** may be provided to convert between wireless signals and electrical signals, enabling the mobile device **102** to send and receive information from a radio access network (RAN) or some other available wireless communications network or from a peer mobile device **102**. In an embodiment, the antenna and front end unit **406** may include multiple antennas to support beam forming and/or multiple input multiple output (MIMO) operations. As is known to those skilled in the art, MIMO operations may provide spatial diversity which can be used to overcome difficult channel conditions and/or increase channel throughput. The antenna and front end unit **406** may include antenna tuning and/or impedance matching components, RF power amplifiers, and/or low noise amplifiers.

The RF transceiver **408** provides frequency shifting, converting received RF signals to baseband and converting baseband transmit signals to RF. In some descriptions a radio transceiver or RF transceiver may be understood to include other signal processing functionality such as modulation/demodulation, coding/decoding, interleaving/deinterleaving, spreading/despreading, inverse fast Fourier transforming (IFFT)/fast Fourier transforming (FFT), cyclic prefix appending/removal, and other signal processing functions. For the purposes of clarity, the description here separates the description of this signal processing from the RF and/or radio stage and conceptually allocates that signal processing to the analog baseband processing unit **410** and/or the DSP **402** or other central processing unit. In some embodiments, the RF transceiver **408**, portions of the antenna and front end **406**, and the analog baseband processing unit **410** may be combined in one or more processing units and/or application specific integrated circuits (ASICs).

The analog baseband processing unit **410** may provide various analog processing of inputs and outputs, for example analog processing of inputs from the microphone **412** and the headset port **416** and outputs to the earpiece speaker **414** and the headset port **416**. To that end, the analog baseband processing unit **410** may have ports for connecting to the built-in microphone **412** and the earpiece speaker **414** that enable the mobile device **102** to be used as a mobile phone. The analog baseband processing unit **410** may further include a port for connecting to a headset or other hands-free microphone and speaker configuration. The analog baseband processing unit **410** may provide digital-to-analog conversion in one signal direction and analog-to-digital conversion in the opposing signal direction. In some embodiments, at least some of the functionality of the analog baseband processing unit **410** may be provided by digital processing components, for example, by the DSP **402** or by other central processing units.

The DSP **402** may perform modulation/demodulation, coding/decoding, interleaving/deinterleaving, spreading/despreading, inverse fast Fourier transforming (IFFT)/fast Fourier transforming (FFT), cyclic prefix appending/removal, and other signal processing functions associated with wireless communications. In an embodiment, for example in a code division multiple access (CDMA) technology application, for a transmitter function the DSP **402** may perform modulation, coding, interleaving, and spreading, and for a receiver function the DSP **402** may perform despreading, deinterleaving, decoding, and demodulation. In another embodiment, for example in an orthogonal frequency division multiplex access (OFDMA) technology application, for the transmitter function the DSP **402** may perform modulation, coding, interleaving, inverse fast Fourier transforming, and cyclic prefix appending, and for a receiver function the DSP **402** may perform cyclic prefix removal, fast Fourier transforming, deinterleaving, decoding, and demodulation. In other wireless technology applications, yet other signal processing functions and combinations of signal processing functions may be performed by the DSP **402**.

The DSP **402** may communicate with a wireless network via the analog baseband processing unit **410**. In some embodiments, the communication may provide Internet connectivity, enabling a user to gain access to content on the Internet and to send and receive e-mail or text messages. The input/output interface **418** interconnects the DSP **402** and various memories and interfaces. The memory **404** and the removable memory card **420** may provide software and data to configure the operation of the DSP **402**. Among the interfaces may be the USB port **422** and the infrared port **424**. The USB port **422** may enable the mobile device **102** to function as a peripheral device to exchange information with a personal computer or other computer system. The infrared port **424** and other optional ports such as a Bluetooth interface or an IEEE 802.11 compliant wireless interface may enable the mobile device **102** to communicate wirelessly with other nearby handsets and/or wireless base stations.

The input/output interface **418** may further connect the DSP **402** to the vibrator **426** that, when triggered, causes the mobile device **102** to vibrate. The vibrator **426** may serve as

a mechanism for silently alerting the user to any of various events such as an incoming call, a new text message, and an appointment reminder.

The keypad **428** couples to the DSP **402** via the input/output interface **418** to provide one mechanism for the user to make selections, enter information, and otherwise provide input to the mobile device **102**. Another input mechanism may be the touch screen/LCD **430**, which may also display text and/or graphics to the user. The touch screen/LCD controller **432** couples the DSP **402** to the touch screen LCD **430**.

The CCD camera **434** enables the mobile device **102** to take digital pictures. The DSP **402** communicates with the CCD camera **434** via the camera controller **436**. The GPS sensor **438** is coupled to the DSP **402** to decode global positioning system signals, thereby enabling the mobile device **102** to determine its position. In another embodiment, a camera operating according to a technology other than charge coupled device cameras may be employed. Various other peripherals may also be included to provide additional functions, e.g., radio and television reception.

FIG. **5** illustrates a software environment **502** that may be implemented by the DSP **402**. The DSP **402** executes operating system drivers **504** that provide a platform from which the rest of the software operates. The operating system drivers **504** provide drivers for the handset hardware with standardized interfaces that are accessible to application software. The operating system drivers **504** include application management services ("AMS") **506** that transfer control between applications running on the mobile device **102**. Also shown in FIG. **5** are a web browser application **508**, a media player application **510**, and JAVA applets **512**. The web browser application **508** configures the mobile device **102** to operate as a web browser, allowing a user to enter information into forms and select links to retrieve and view web pages. The media player application **510** configures the mobile device **102** to retrieve and play audio or audiovisual media. The JAVA applets **512** configure the mobile device **102** to provide games, utilities, and other functionality.

FIG. **6** illustrates a computer system **680** suitable for implementing one or more embodiments disclosed herein. The computer system **680** includes a processor **682** (which may be referred to as a central processor unit or CPU) that is in communication with memory devices including secondary storage **684**, read only memory (ROM) **686**, random access memory (RAM) **688**, input/output (I/O) devices **690**, and network connectivity devices **692**. The processor **682** may be implemented as one or more CPU chips.

It is understood that by programming and/or loading executable instructions onto the computer system **680**, at least one of the CPU **682**, the RAM **688**, and the ROM **686** are changed, transforming the computer system **680** in part into a particular machine or apparatus having the novel functionality taught by the present disclosure. It is fundamental to the electrical engineering and software engineering arts that functionality that can be implemented by loading executable software into a computer can be converted to a hardware implementation by well known design rules. Decisions between implementing a concept in software versus hardware typically hinge on considerations of stability of the design and numbers of units to be produced rather than any issues involved in translating from the software domain to the hardware domain. Generally, a design that is still subject to frequent change may be preferred to be implemented in software, because re-spinning a hardware implementation is more expensive than re-spinning a software design. Generally, a design that is stable that will be produced in large volume may be preferred to be implemented in hardware, for example in an application specific integrated circuit (ASIC), because for large production runs the hardware implementation may be less expensive than the software implementation. Often a design may be developed and tested in a software form and later transformed, by well known design rules, to an equivalent hardware implementation in an application specific integrated circuit that hardwires the instructions of the software. In the same manner as a machine controlled by a new ASIC is a particular machine or apparatus, likewise a computer that has been programmed and/or loaded with executable instructions may be viewed as a particular machine or apparatus.

The secondary storage **684** is typically comprised of one or more disk drives or tape drives and is used for non-volatile storage of data and as an over-flow data storage device if RAM **688** is not large enough to hold all working data. Secondary storage **684** may be used to store programs which are loaded into RAM **688** when such programs are selected for execution. The ROM **686** is used to store instructions and perhaps data which are read during program execution. ROM **686** is a non-volatile memory device which typically has a small memory capacity relative to the larger memory capacity of secondary storage **684**. The RAM **688** is used to store volatile data and perhaps to store instructions. Access to both ROM **686** and RAM **688** is typically faster than to secondary storage **684**.

I/O devices **690** may include printers, video monitors, liquid crystal displays (LCDs), touch screen displays, keyboards, keypads, switches, dials, mice, track balls, voice recognizers, card readers, paper tape readers, or other well-known input devices.

The network connectivity devices **692** may take the form of modems, modem banks, Ethernet cards, universal serial bus (USB) interface cards, serial interfaces, token ring cards, fiber distributed data interface (FDDI) cards, wireless local area network (WLAN) cards, radio transceiver cards such as code division multiple access (CDMA), global system for mobile communications (GSM), long-term evolution (LTE), worldwide interoperability for microwave access (WiMAX), and/or other air interface protocol radio transceiver cards, and other well-known network devices. These network connectivity devices **692** may enable the processor **682** to communicate with an Internet or one or more intranets. With such a network connection, it is contemplated that the processor **682** might receive information from the network, or might output information to the network in the course of performing the above-described method steps. Such information, which is often represented as a sequence of instructions to be executed using processor **682**, may be received from and outputted to the network, for example, in the form of a computer data signal embodied in a carrier wave.

Such information, which may include data or instructions to be executed using processor **682** for example, may be received from and outputted to the network, for example, in the form of a computer data baseband signal or signal embodied in a carrier wave. The baseband signal or signal embodied in the carrier wave generated by the network connectivity devices **692** may propagate in or on the surface of electrical conductors, in coaxial cables, in waveguides, in an optical conduit, for example an optical fiber, or in the air or free space. The information contained in the baseband signal or signal embedded in the carrier wave may be ordered according to different sequences, as may be desirable for either processing or generating the information or transmitting or receiving the information. The baseband signal or signal embedded in the carrier wave, or other types of signals cur-

rently used or hereafter developed, may be generated according to several methods well known to one skilled in the art.

The processor **682** executes instructions, codes, computer programs, scripts which it accesses from hard disk, floppy disk, optical disk (these various disk based systems may all be considered secondary storage **684**), ROM **686**, RAM **688**, or the network connectivity devices **692**. While only one processor **682** is shown, multiple processors may be present. Thus, while instructions may be discussed as executed by a processor, the instructions may be executed simultaneously, serially, or otherwise executed by one or multiple processors.

In an embodiment, the computer system **680** may comprise two or more computers in communication with each other that collaborate to perform a task. For example, but not by way of limitation, an application may be partitioned in such a way as to permit concurrent and/or parallel processing of the instructions of the application. Alternatively, the data processed by the application may be partitioned in such a way as to permit concurrent and/or parallel processing of different portions of a data set by the two or more computers. In an embodiment, virtualization software may be employed by the computer system **680** to provide the functionality of a number of servers that is not directly bound to the number of computers in the computer system **680**. For example, virtualization software may provide 20 virtual servers on 4 physical computers. In an embodiment, the functionality disclosed above may be provided by executing the application and/or applications in a cloud computing environment. Cloud computing may comprise providing computing services via a network connection using dynamically scalable computing resources. Cloud computing may be supported, at least in part, by virtualization software. A cloud computing environment may be established by an enterprise and/or may be hired on an as-needed basis from a third party provider. Some cloud computing environments may comprise cloud computing resources owned and operated by the enterprise as well as cloud computing resources hired and/or leased from a third party provider.

In an embodiment, some or all of the functionality disclosed above may be provided as a computer program product. The computer program product may comprise one or more computer readable storage medium having computer usable program code embodied therein implementing the functionality disclosed above. The computer program product may comprise data, data structures, files, executable instructions, and other information. The computer program product may be embodied in removable computer storage media and/or non-removable computer storage media. The removable computer readable storage medium may comprise, without limitation, a paper tape, a magnetic tape, magnetic disk, an optical disk, a solid state memory chip, for example analog magnetic tape, compact disk read only memory (CD-ROM) disks, floppy disks, jump drives, digital cards, multimedia cards, and others. The computer program product may be suitable for loading, by the computer system **680**, at least portions of the contents of the computer program product to the secondary storage **684**, to the ROM **686**, to the RAM **688**, and/or to other non-volatile memory and volatile memory of the computer system **680**. The processor **682** may process the executable instructions and/or data in part by directly accessing the computer program product, for example by reading from a CD-ROM disk inserted into a disk drive peripheral of the computer system **680**. The computer program product may comprise instructions that promote the loading and/or copying of data, data structures, files, and/or executable instructions to the secondary storage **684**, to the ROM **686**, to the RAM **688**, and/or to other non-volatile memory and volatile memory of the computer system **680**.

While several embodiments have been provided in the present disclosure, it should be understood that the disclosed systems and methods may be embodied in many other specific forms without departing from the spirit or scope of the present disclosure. The present examples are to be considered as illustrative and not restrictive, and the intention is not to be limited to the details given herein. For example, the various elements or components may be combined or integrated in another system or certain features may be omitted or not implemented.

Also, techniques, systems, subsystems, and methods described and illustrated in the various embodiments as discrete or separate may be combined or integrated with other systems, modules, techniques, or methods without departing from the scope of the present disclosure. Other items shown or discussed as directly coupled or communicating with each other may be indirectly coupled or communicating through some interface, device, or intermediate component, whether electrically, mechanically, or otherwise. Other examples of changes, substitutions, and alterations are ascertainable by one skilled in the art and could be made without departing from the spirit and scope disclosed herein.

What is claimed is:

1. A communication system, comprising:

a processor;

a memory storing information associating a first media access control (MAC) address to a first application type;

a radio transceiver that receives a first multicast message containing a first source media access control address and a first destination media access control address, and receives a second multicast message containing a second source media access control address and a second destination media access control address, wherein the first multicast message invokes the first application type, wherein the second multicast message invokes the first application type, and wherein the first destination media access control address is associated with a first member of a physical wireless local area network and the second destination media access control address is associated with a second member of the physical wireless local area network; and

a filtering application stored in the memory that, when executed by the processor,

receives the first multicast message from the radio transceiver, analyzes the first multicast message to determine that the first multicast message invokes the first application type, accesses the memory to confirm that the first source media access control address is associated with and authorized to send messages that invoke the first application type, and based on the confirmation sending the first multicast message to the radio transceiver to transmit to the first destination media access control address, and

receives the second multicast message from the radio transceiver, analyzes the second multicast message to determine that the second multicast message invokes the first application type, determines by accessing the memory that the second source media access control address is not associated with and not authorized to send messages that invoke the first application type, and based on the negative determination not forwarding the second multicast message to the radio transceiver to transmit.

2. The communication system of claim 1, wherein the first application type is a media local area network application type.

3. The communication system of claim 2, wherein the first multicast message comprises a simple service discovery protocol message.

4. The communication system of claim 1, wherein the filtering application analyzes the first multicast message based on reading an application layer header of the first multicast message and analyzes the second multicast message based on reading an application layer header of the second multicast message.

5. The communication system of claim 1, wherein the first destination media access control address and the second destination media access control address are a multicast address.

6. The communication system of claim 1, wherein the communication system comprises a wireless access point operating in an infrastructure mode.

7. A processor-implemented method of communication, comprising:

receiving a first multicast message from a first device, wherein the first multicast message invokes a first application type, and wherein the first device is a member of a physical wireless local area network;

determining that the media access control address of a second device is authorized to receive messages that invoke the first application type by consulting a data store, wherein the second device is a member of the physical wireless local area network;

transmitting the first multicast message to the second device;

determining that the media access control address of a third device is not authorized to receive messages that invoke the first application type by consulting the data store, wherein the third device is a member of the physical wireless local area network; and

stopping transmission of the first multicast message to the third device.

8. The method of claim 7, further comprising:

receiving a second multicast message from a fourth device, wherein the second multicast message invokes a second application type and the fourth device is a member of the physical wireless local area network;

determining that the media access control address of the second device is authorized to receive messages that invoke the second application type by consulting the data store;

transmitting the second multicast message to the second device;

determining that the media access control address of the third device is authorized to receive messages that invoke the second application type by consulting the data store; and

transmitting the second multicast message to the third device.

9. The method of claim 8, further comprising:

defining a first entry in the data store that authorizes the media access control address of the second device to receive messages that invoke the first application type;

defining a second entry in the data store that authorizes the media access control address of second device to receive messages that invoke the second application type;

defining a third entry in the data store that authorizes the media access control address of the third device to receive messages that invoke the second application type.

10. The method of claim 9, wherein the data store defines a first virtual application local area network authorized to receive messages invoking the first application type and defines a second virtual application local area network authorized to receive messages invoking the second application type, wherein the members of the first and second virtual application local area networks comprise members of the physical wireless local area network.

11. The method of claim 7, wherein the first multicast message comprises a simple service discovery protocol message.

12. The method of claim 9, further comprising:

defining a fifth entry in the data store that identifies a media access control address of a fifth device;

stopping transmission of the first multicast message to the fifth device based on the media access control address of the fifth device not being authorized to receive messages invoking the first application type in the data store, the fifth device being a member of the physical wireless local area network;

receiving a message from the fifth device containing an internet protocol address outside of the physical wireless local area network; and

transmitting the message from the fifth device to a router outside of the physical wireless local area network.

13. A wireless access point, comprising:

a processor;

a memory storing information authorizing a first media access control (MAC) address and a second media access control address to receive messages invoking a first application type and authorizing the first media access control address and a third media access control address to receive messages invoking a second application type, wherein the first media access control address is associated with a first member of a physical wireless local area network, the second media access control address is associated with a second member of the physical wireless local area network, and the third media access control address is associated with a third member of the physical wireless local area network;

a radio transceiver; and

a filtering application stored in the memory that, when executed by the processor,

receives a first multicast message from the radio transceiver, the first multicast message invoking the first application type,

determines that the information in the memory authorizes the first media access control address to receive messages invoking the first application type,

sends the first multicast message to the radio transceiver for transmission to the first media access control address,

determines that the information in the memory authorizes the second media access control address to receive messages invoking the first application type,

sends the first multicast message to the radio transceiver for transmission to the second media access control address,

determines that the information in the memory does not authorize the third media access control address to receive messages invoking the first application type, and

does not send the first multicast message to the radio transceiver for transmission to the third media access control address.

14. The wireless access point of claim 13, wherein the filtering application further

receives a second multicast message from the radio transceiver, the second multicast message invoking the second application type,

determines that the information in the memory authorizes the first media access control address to receive messages invoking the second application type,

sends the second multicast message to the radio transceiver for transmission to the first media access control address,

determines that the information in the memory does not authorize the second media access control address to receive messages invoking the second application type,

does not send the second multicast message to the radio transceiver for transmission to the second media access control address, and

determines that the information in the memory authorizes the third media access control address to receive messages invoking the second application type,

sends the second multicast message to the radio transceiver for transmission to the third media access control address.

15. The wireless access point of claim **13**, wherein the application further

receives a third multicast message from the radio transceiver, the third multicast message invoking a third application type,

sends the third multicast message to the radio transceiver for transmission to the first media access control address,

sends the third multicast message to the radio transceiver for transmission to the second media access control address, and

sends the third multicast message to the radio transceiver for transmission to the third media access control address.

16. The wireless access point of claim **15**, wherein the third application type is a hyper text transport protocol application type.

17. The wireless access point of claim **13**, wherein the application further provides an interface for entering information into the memory defining authorizations of application types and media access control addresses of members of the physical wireless local area network.

18. The wireless access point of claim **17**, wherein the interface provides a function for adding a guest media access control address to the memory to permit a guest device on the physical wireless local area network to access the Internet via the wireless access point.

19. The wireless access point of claim **13**, wherein the application further

receives a fourth message from the second member of the physical wireless local area network, wherein the fourth message invokes the second application type; and

does not send the fourth message to the radio transceiver.

20. The wireless access point of claim **13**, wherein the first application type is a media local area network application.

* * * * *