UNITED STATES PATENT AND TRADEMARK OFFICE

BEFORE THE PATENT TRIAL AND APPEAL BOARD

SAMSUNG ELECTRONICS CO., LTD.
Petitioner

v.

MOJO MOBILITY INC.
Patent Owner

Patent No. 11,342,777

PETITION FOR *INTER PARTES* REVIEW
OF U.S. PATENT NO. 11,342,777

TABLE OF CONTENTS

I. INTRODUCTION 1

II. MANDATORY NOTICES 1

III. PAYMENT OF FEES 2

IV. GROUNDS FOR STANDING 2

V. PRECISE RELIEF REQUESTED AND GROUNDS 2

VI. LEVEL OF ORDINARY SKILL 4

VII. THE '777 PATENT 4

VIII. CLAIM CONSTRUCTION 5

IX. DETAILED EXPLANATION OF GROUNDS 6

A. Ground 1: Claims 15, 20, 21, and 23 are obvious over *Sogabe* in view of *Azancot* 6

1. Claim 15 6

2. Claim 20 47

3. Claim 21 56

4. Claim 23 57

B. Ground 2: Claims 17 and 21 are obvious over *Sogabe* in view of *Azancot* and *Walley* 58

1. Claim 17 58

2. Claim 21 65

C. Ground 3: Claim 22 is obvious over *Sogabe* in view of *Azancot* and *Baarman* 67

1. Claim 22 67

X. DISCRETIONARY DENIAL IS NOT APPROPRIATE 75

XI. CONCLUSION.....80

LIST OF EXHIBITS

Ex. 1001	U.S. Patent No. 11,342,777
Ex. 1002	Declaration of R. Jacob Baker, Ph.D., P.E.
Ex. 1003	Curriculum Vitae of R. Jacob Baker, Ph.D., P.E.
Ex. 1004	Prosecution History of U.S. Patent No. 11,342,777
Ex. 1005	U.S. Patent No. 8,369,905 ("*Sogabe*")
Ex. 1006	U.S. Patent No. 8,090,550 ("*Azancot*")
Ex. 1007	U.S. Patent No. 8,390,249 ("*Walley*")
Ex. 1008	U.S. Patent Application Publication No. 2010/0007307 ("*Baarman*")
Ex. 1009	RESERVED
Ex. 1010	Wireless Power Consortium, System Description: Wireless Power Transfer, Volume 1: Low Power, Version 1.0.1 (October 2010)
Ex. 1011	D. van Wageningen, The Qi Wireless Power Standard, IEEE (October 2010)
Ex. 1012	U.S. Patent Application Publication No. 2011/0018360 ("*Baarman II*")
Ex. 1013	U.S. Patent Application Publication No. 2011/0163713 ("*Wang*")
Ex. 1014	U.S. Patent Application Publication No. 2009/0096413 ("*Partovi*")
Ex. 1015	Leon Adams, Choosing the Right Architecture for Real-Time Signal Processing Designs, Texas Instruments (November 2002), accessed at https://www.ti.com/lit/wp/spra879/spra879.pdf.

Ex. 1016	Prosecution History of U.S. Patent No. 9,178,369
Ex. 1017	Prosecution History of U.S. Patent No. 10,141,770
Ex. 1018-1020	RESERVED
Ex. 1021	Mojo Mobility's Infringement Contentions in *Mojo Mobility Inc. v. Samsung Elecs. Co., Ltd.*, No. 2:22-cv-00398 (E.D. Tex.) (February 28, 2023)
Ex. 1022	Memorandum from Director Vidal (June 21, 2022)
Ex. 1023	Federal Court Management Statistics (December 2022)
Ex. 1024	Docket Control Order of March 28, 2023, *Mojo Mobility Inc. v. Samsung Elecs. Co., Ltd.*, No. 2:22-cv-00398 (E.D. Tex.)
Ex. 1025	Mojo Mobility's Infringement Chart for U.S. Patent No. (Ex. 7) accompanying Mojo Mobility's Infringement Contentions in *Mojo Mobility Inc. v. Samsung Elecs. Co., Ltd.*, No. 2:22-cv-00398 (E.D. Tex.) (February 28, 2023)
Ex. 1026	Microcontrollers, Pushpinder Singh, Massachusetts Institute of Technology, Sept. 25, 2009, accessed at https://web.archive.org/web/20090925183946/https://web.mit.edu/rec/www/workshop/microcontrollers.html.
Ex. 1027	U.S. Patent Application Publication No. 2008/0214211 ("*Lipovski*")
Ex. 1028	U.S. Patent No. 5,798,828 ("*Thomas*")
Ex. 1029	U.S. Patent No. 8,193,764 ("*Jakubowski*")
Ex. 1030-1032	RESERVED
Ex. 1033	U.S. Patent Application Publication No. 2011/0261907 ("*Lee*")
Ex. 1034	U.S. Patent Application Publication No. 2011/0148578 ("*Aloi*")
Ex. 1035	U.S. Patent No. 8,234,509 ("*Gioscia*")

Ex. 1036	U.S. Patent Application Publication No. 2010/0084918 ("*Fells*")
Ex. 1037	U.S. Patent No. 9,407,327 ("*Kirby*")
Ex. 1038	Watson, J., Mastering Electronics, Third Ed., McGraw-Hill, Inc. (1990) ("*Watson*")
Ex. 1039	Sedra, A., *et al.*, Microelectronic Circuits, Fourth Ed., Oxford University Press (1998) ("*Sedra*")
Ex. 1040	Physics, Henry Semat et al., Rinehart & Co., Inc., 1958, Chapters 29-32 ("*Semat*")
Ex. 1041	GB Patent Application Publication No. 2202414 ("*Logan*")
Ex. 1042	U.S. Patent No. 7,226,442 ("*Sheppard*")
Ex. 1043	U.S. Patent No. 6,489,745 ("*Koreis*")
Ex. 1044	U.S. Patent No. 6,960,968 ("*Odendaal*")
Ex. 1045	International Patent Application Publication No. WO1996040367 ("*WangII*")
Ex. 1046	International Patent Application Publication No. WO2003/096361 ("*Cheng*")
Ex. 1047	U.S. Patent No. 6,366,817 ("*Kung*")
Ex. 1048	AN710 Antenna Circuit Design for RFID Applications
Ex. 1049	U.S. Patent Application Publication No. 2006/0145660A1 ("*Black*")
Ex. 1050	U.S. Patent No. 5,780,992 ("*Beard*")
Ex. 1051	U.S. Patent Application Publication No. 2005/0068019 ("*Nakamura*")
Ex. 1052	U.S. Patent No. 6,912,137 ("*Berghegger*")
Ex. 1053	U.S. Patent No. 8,618,770 ("*BaarmanIII*")

Ex. 1054	U.S. Patent No. 8,884,468 ("*Lemmens*")
Ex. 1055	U.S. Patent No. 8,305,951 ("*Breau*")
Ex. 1056	U.S. Patent Application Publication No. 2006/0259616 ("*Lester*")
Ex. 1057	U.S. Patent Application Publication No. 2010/0080231 ("*Lala*")
Ex. 1058	U.S. Patent No. 7,133,375 ("*Molla*")
Ex. 1059	U.S. Patent Application Publication No. 2005/0243786 ("*Bae*")
Ex. 1060	U.S. Patent Application Publication No. 2004/0100924 ("*Yam*")
Ex. 1061	U.S. Patent Application Publication No. 2004/0017829 ("*Gray*")

I. INTRODUCTION

Samsung Electronics Co., Ltd. ("Petitioner") requests *inter partes* review of claims 15, 17, and 20-23 ("challenged claims") of U.S. Patent No. 11,342,777 ("the '777 patent") (Ex. 1001) assigned to Mojo Mobility Inc. ("PO"). For the reasons below, each challenged claim should be found unpatentable and canceled.

II. MANDATORY NOTICES

Real Parties-in-Interest: Petitioner identifies the following as the real parties-in-interest: Samsung Electronics Co., Ltd., and Samsung Electronics America, Inc.

Related Matters: The '777 patent is at issue in the following matter(s):

- *Mojo Mobility Inc. v. Samsung Electronics Co., Ltd.*, No. 1-22-cv-00398 (E.D. Tex.) (asserting the '777 patent and also U.S Patent Nos. 7,948,208, 9,577,440, 11,292,349, 11,316,371, 11,201,500, and 11,462,942) ("Texas Litigation").
- Petitioner is filing concurrently herewith a petition for *inter partes* review challenging other claims of the '777 patent.

The '777 patent issued from Application No. 16/199,904, which was filed as a continuation-in-part of Application No. 14/929,315 (now U.S. Patent No. 10,141,770), which was filed as a continuation-in-part of Application No. 13/352,096 (now U.S. Patent No. 9,178,369 ("the '369 patent")), and claims priority

to U.S. Provisional Application No. 61/546,316 (filed Oct. 12, 2011), U.S. Provisional Application No. 61/478,020 (filed Apr. 21, 2011), and U.S. Provisional Application No. 61/433,883 (filed Jan. 18, 2011). (Ex. 1001, Cover.)

Counsel and Service Information: Lead counsel: Joseph E. Palys (Reg. No. 46,508), and Backup counsel are (1) Naveen Modi (Reg. No. 46,224) and (2) Kevin Stewart (Reg. No. 78,581). Service information is Paul Hastings LLP, 2050 M St., Washington, D.C., 20036, Tel.: 202.551.1700, Fax: 202.551.1705, email: PH-Samsung-MojoMobility-IPR@paulhastings.com. Petitioner consents to electronic service.

III. PAYMENT OF FEES

The PTO is authorized to charge any fees due during this proceeding to Deposit Account No. 50-2613.

IV. GROUNDS FOR STANDING

Petitioner certifies that the ’777 patent is available for review and Petitioner is not barred or estopped from requesting review on the grounds identified herein.

V. PRECISE RELIEF REQUESTED AND GROUNDS

The challenged claims should be canceled as unpatentable based on the following grounds:

Ground 1: Claims 15, 20, 21, and 23 are unpatentable under pre-AIA[1] 35 U.S.C. § 103 as being obvious over *Sogabe* in view of *Azancot*;

Ground 2: Claims 17 and 21 are unpatentable under pre-AIA 35 U.S.C. § 103 as being obvious over *Sogabe* in view of *Azancot* and *Walley*; and

Ground 3: Claim 22 is unpatentable under pre-AIA 35 U.S.C. § 103 as being obvious over *Sogabe* in view of *Azancot* and *Baarman*.

The '777 patent claims priority via provisional applications dating back to January 18, 2011 and October 12, 2011. (§II.) PO has stated in the Texas Litigation the following priority dates (and possibly three months earlier): 1/18/2011: claims 15, 17, and 20-23. (Ex. 1021, 7-8.) Petitioner assumes such dates for purposes of this proceeding without conceding that the '777 patent is entitled to such dates.[2]

Sogabe was filed on 7/15/2009, *Azancot* was filed on 9/21/2009, *Walley* was filed on 6/3/2010, and *Baarman* was filed on 7/9/2009, and thus each qualifies as prior art at least under pre-AIA 35 U.S.C. § 102(e) based on the above-identified priority date.

None of the above prior art references were substantively considered during prosecution of the '777 patent. (*See generally* Ex. 1004; Ex. 1016; Ex. 1017; *infra*

---

[1] Petitioner does not concede that pre-AIA law governs the '777 patent.

[2] Petitioner reserves right to challenge priority as necessary.

§X.) *Baarman* and a patent application publication relating to *Azancot* were submitted in IDSs during prosecution of the parent '369 patent (§II) the same day that over 300 references were submitted. (Ex. 1016, 587-616, 1079-1097.)

VI. LEVEL OF ORDINARY SKILL

A person of ordinary skill in the art as of the claimed priority date of the '777 patent ("POSITA") would have had at least a master's degree in electrical engineering, or a similar discipline, and two or more years of experience with wireless charging systems, including, for example, inductive power transfer systems. (Ex. 1002, ¶¶21-22, 23-66.)[3] More education can supplement practical experience and vice versa. (*Id.*)

VII. THE '777 PATENT

The '777 patent generally relates to wireless charging/powering systems that use inductive charging protocols, (*e.g.*, uni-directional messaging and bi-directional messaging protocols). (Ex. 1001, Abstract, 1:45-2:3, 2:41-52, 13:52-58.) As demonstrated below, the claimed features are a compilation of known technologies/techniques taught/suggested by the prior art identified herein. (*Infra*

[3] Petitioner submits the declaration of R. Jacob Baker, Ph.D., P.E. (Ex. 1002), an expert in the field of the '777 patent. (Ex. 1002, ¶¶1-13; Ex. 1003.)

§IX; Ex. 1002, ¶¶23-66, 69-181; Exs. 1005-1008, 1010-1017, 1026-1029, 1033-1061.)

VIII. CLAIM CONSTRUCTION

The Board only construes the claims when necessary to resolve the underlying controversy. *Toyota Motor Corp. v. Cellport Systems, Inc.*, IPR2015-00633, Paper No. 11 at 16 (Aug. 14, 2015) (citing *Vivid Techs., Inc. v. Am. Sci. & Eng'g, Inc.*, 200 F.3d 795, 803 (Fed. Cir. 1999)). For purposes of this proceeding, Petitioner believes that no special constructions of the claim terms are necessary to assess whether the challenged claims are unpatentable over the asserted prior art.[4] (Ex. 1002, ¶68.)

[4] Petitioner reserves all rights to raise claim construction and other arguments (*e.g.*, §112, etc.) in district court as relevant to those proceedings. *See, e.g.*, *Target Corp. v. Proxicom Wireless, LLC*, IPR2020-00904, Paper 11 at 11–13 (Nov. 10, 2020). A comparison of the claims to any accused products in litigation may raise controversies that are not presented here given the similarities between the art and the patent.

IX. DETAILED EXPLANATION OF GROUNDS[5]

A. Ground 1: Claims 15, 20, 21, and 23 are obvious over *Sogabe* in view of *Azancot*

1. Claim 15

a) An electronic device capable of receiving power inductively, the electronic device comprising:

To the extent limiting, *Sogabe* discloses this limitation. (Ex. 1002, ¶¶70-75, 85-87.)

For instance, *Sogabe* discloses cell phone 510 (and other electronic apparatuses with a load/battery (*e.g.*, watches, physical digital assistants, etc.)) ("**electronic device**") that inductively receives power/charge from a charger 500 ("**capable of receiving power inductively**"). (Ex. 1005, 5:59-6:38, 6:3-8 ("Power is supplied to the charger 500 through an AC adapter 502, and the power is transmitted from the power transmission device 10 to the power receiving device 40 by **contactless power transmission**. Accordingly, a battery of the cell phone 510 can be charged and devices in the cell phone 510 can be operated.")[6], 6:41-50; *see*

[5] References to prior art exhibits other than the asserted prior art identified in each of the grounds are to demonstrate/support Dr. Baker's opinions regarding a POSITA's state-of-art knowledge at the time, as applicable.

[6] In this Petition, all emphasis is added unless otherwise indicated.

also id., 1:43-5:7, 1:19-26 ("[C]ontactless power transmission (non-contact power transmission) has been highlighted. The contactless power transmission makes it possible to perform **transmission of electric power by utilizing electromagnetic induction** without using a metallic contact."); Ex. 1002, ¶86.) For example, Figures 1A-1C (below), illustrate a cell phone 510 that receives power wirelessly from charger/cradle 500. (Ex. 1005, 5:59-6:38, FIGS. 1A-1C.)

FIG. 1A

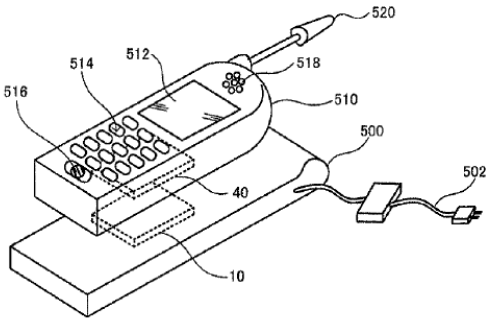

FIG. 1B

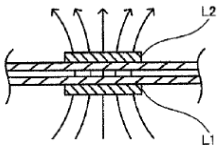

FIG. 1C

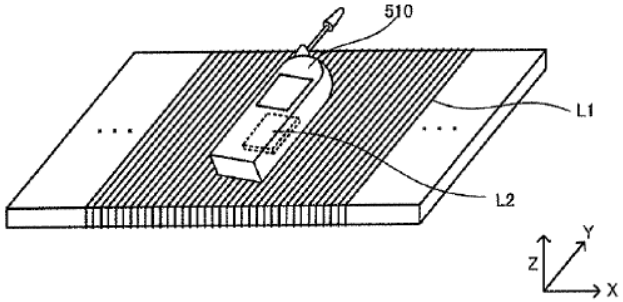

(*Id.*, FIGS. 1A-1C.)

Sogabe discloses that the charger/cradle includes a power transmission device 10 ("PTD10"), and that the cell phone (or other device) includes a power receiving device 40 ("PRD40") (which is also an "**electronic device**") coupled to a load/battery 90/94. (*Id.*, 5:16-19, 5:60-65, 6:39-55, 8:28-36.) Figures 2 and 9

illustrate additional details of the PRD40 of the electronic device. (*Id.*, 6:39-55, 22:7-11, FIGS. 2, 9; Ex. 1002, ¶87.)

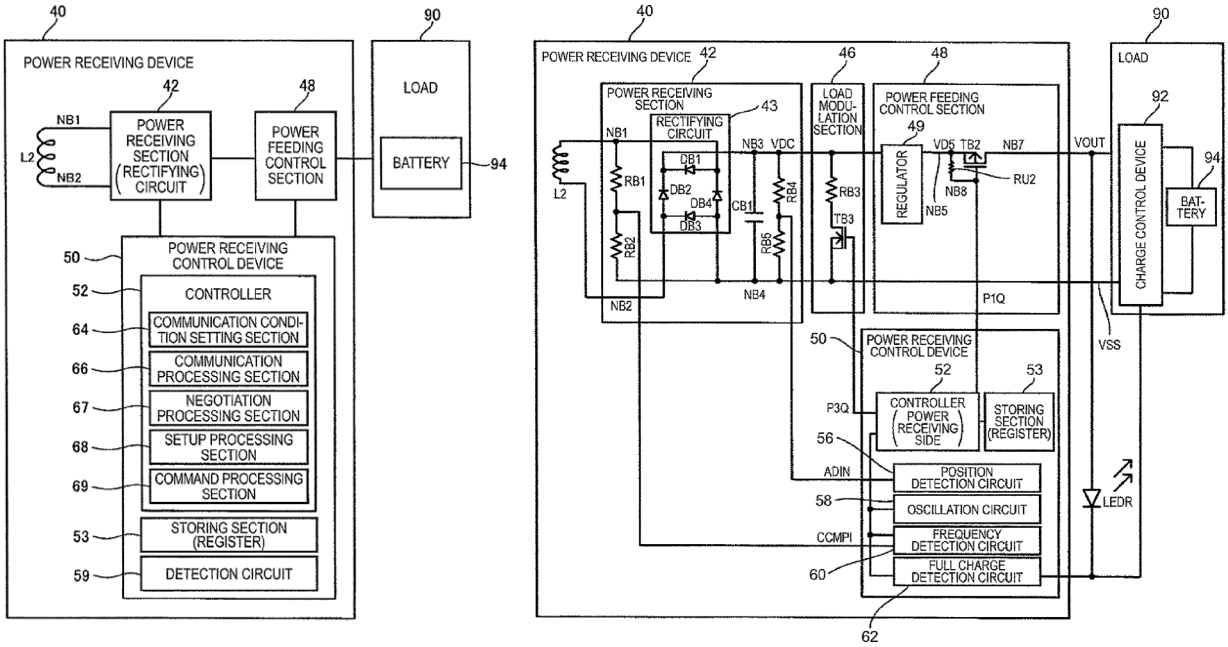

(*Id.*, FIG. 2 (left) (excerpted), FIG. 9 (right) (excerpted).)

b) an inductive charging receiver coil;

Sogabe discloses this limitation. (Ex. 1002, ¶88.) For instance, *Sogabe* discloses that the electronic device that receives power includes "secondary coil L2" ("**inductive charging receiver coil**"). (Ex. 1005, 6:50-57, FIGS. 2, 9; *see also id.*, 6:23-38, FIGS. 1B-1C.) Secondary coil L2 receives wireless power from a primary coil L1 of PTD10 in order to charge battery 94. (*Id.*, 6:50-55, 6:65-7:25, 8:23-35.)

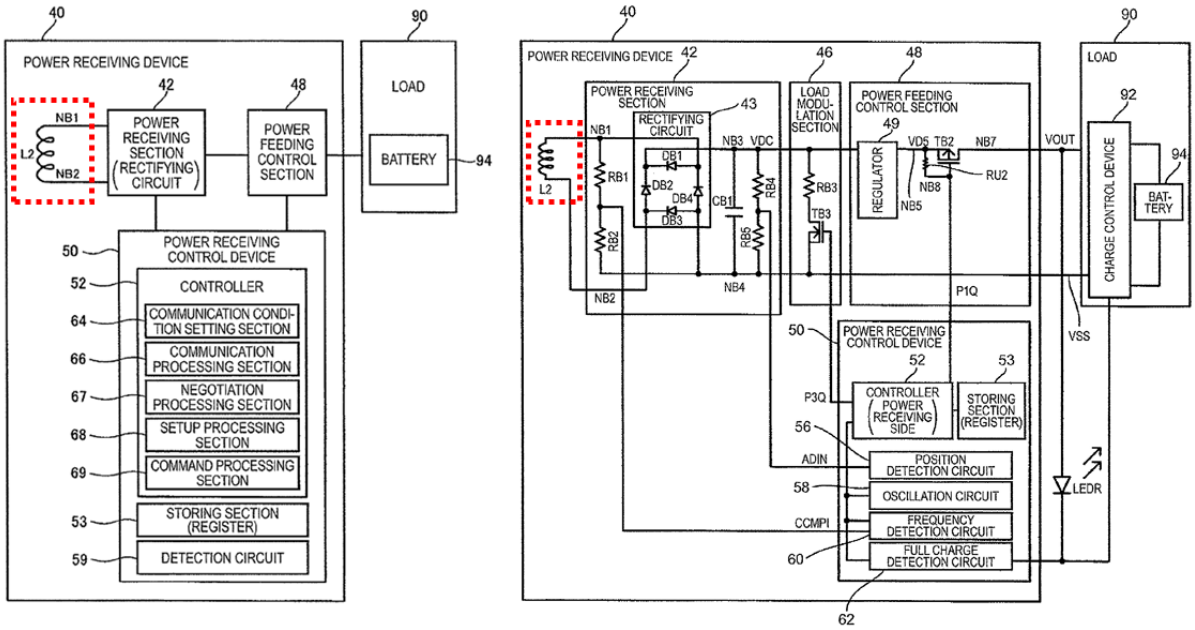

(*Id.*, FIGS. 2 (left), 9 (right) (annotated and excerpted).)

c) a communication transmitter circuit electrically coupled to the inductive charging receiver coil for communicating through the coil;

Sogabe discloses this limitation. (Ex. 1002, ¶¶89-91.) For instance, *Sogabe* discloses that the electronic device that receives power includes "load modulation section 46" (an example of a "**communication transmitter circuit**").[7] (Ex. 1005, 23:10-26, FIG. 9; *see also id.*, 7:51-55, 8:16-22, 8:50-53.) "[W]hen desired data is

[7] Additionally, load modulation section 46 together with one or more components/circuitry in PRD40 that facilitate the discussed transmissions/communications through L2 also teach the claimed "**communication transmitter circuit**." (Ex. 1002, ¶89.)

transmitted from the power receiving device 40 to the power transmission device 10, a load on the load modulation section 46 (the secondary side) is variably changed so as to vary a signal waveform of the induced voltage of the primary coil L1." (*Id.*, 23:10-16.)

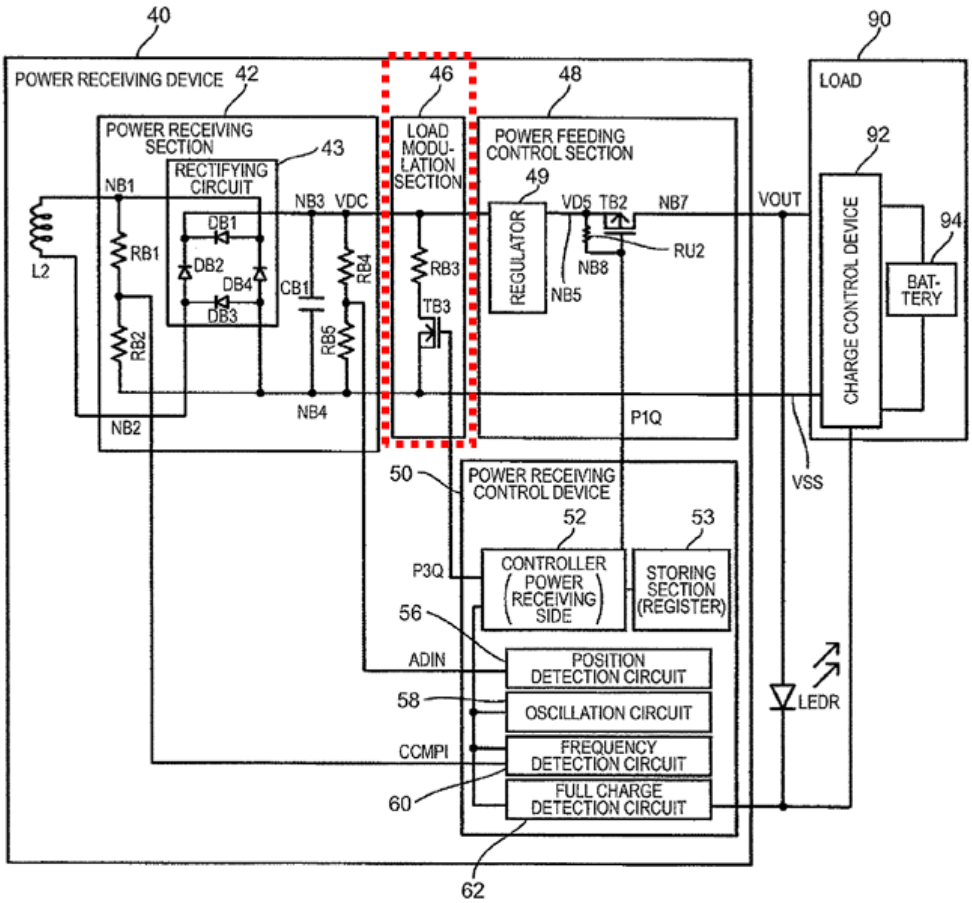

(*Id.*, FIG. 9 (annotated and excerpted).)[8]

Sogabe discloses that load modulation section 46 is "**electrically coupled to the inductive charging receiver coil for communicating through the coil**." (Ex.

[8] The Figure 2 disclosure may include a similar structure. (Ex. 1005, 8:16-22.)

1002, ¶90.) For instance, *Sogabe* discloses "a load on the load modulation section 46 (the secondary side) is variably changed so as to vary a signal waveform of the induced voltage of the primary coil L1." (Ex. 1005, 23:10-16.) To induce a voltage on the primary coil L1, load modulation section 46 transmits 1s and 0s over the secondary coil L2 by changing between high and low load states. (*Id.*, 23:10-26, 24:4-17, 28:17-29, FIGS. 2, 9, 14A; Ex. 1002, ¶90.) *Sogabe* discloses that various setup information, data, etc. is communicated from PRD40 to PTD10, thereby demonstrating that the above exemplary communication transmitter circuit is "**electrically coupled to the inductive charging receiver coil for communicating through the coil**." (Ex. 1005, 7:50-55, 24:4-17, FIGS. 2, 9, 14A; Ex. 1002, ¶¶90-91.)

d) a communication receiver circuit electrically coupled to the inductive charging receiver coil for communicating through the coil; and

Sogabe discloses this limitation. (Ex. 1002, ¶¶92-94.) For instance, with respect to Figure 2 below, *Sogabe* discloses the electronic device that receives power includes a "detection circuit 59" (an example of a "**communication receiver circuit**").[9] (Ex. 1005, 8:58-62, FIG. 2.) *Sogabe* discloses that "[t]he detection

[9] Additionally, detection circuit 59/60 together with one or more components/circuitry in PRD40 that facilitate the discussed

circuit 59 detects data transmitted from the power transmission device 10," where, for example, the data can be transmitted by frequency modulation. (*Id.*, 8:58-62.) With respect to Figure 9, which is a detailed structural example of *Sogabe*'s device/system shown in Figure 2, (*id.*, 22:8-11), *Sogabe* discloses a "frequency detection circuit 60" ("**communication receiver circuit**") which performs a similar data detection function. (*Id.*, 23:44-45, 23:55-24:3, FIGS. 9, 10A.) (Ex. 1002, ¶92.)

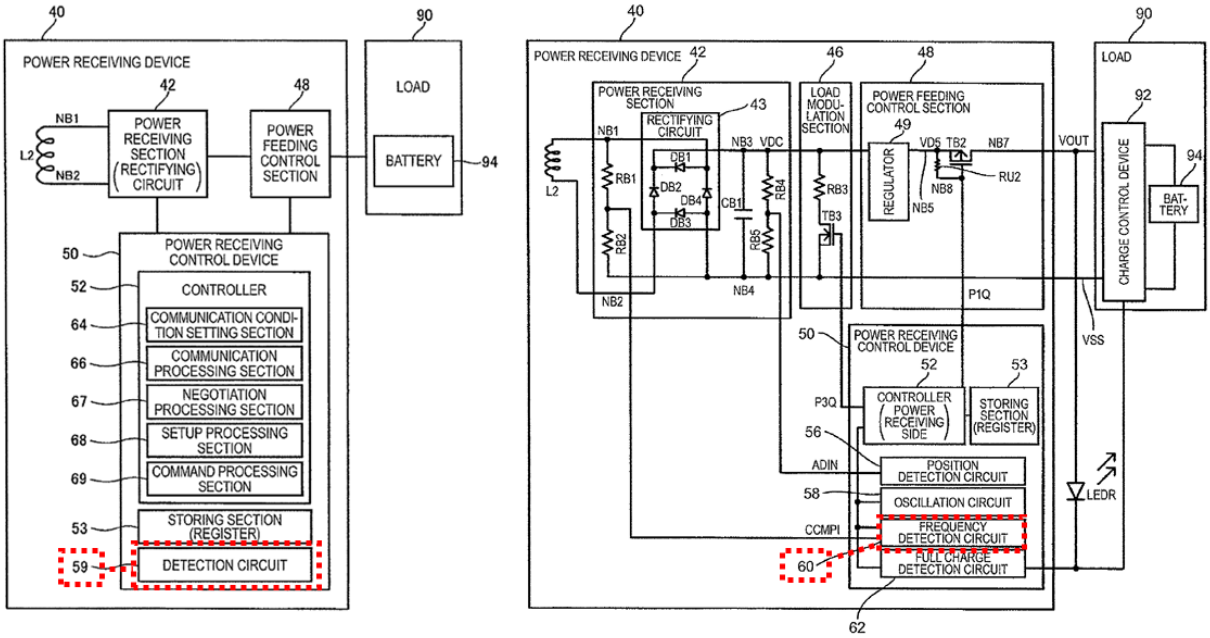

(*Id.*, FIGS. 2 (left), 9 (right) (annotated and excerpted).)

Sogabe discloses that detection circuit 59/60 is "**electrically coupled to the inductive charging receiver coil for communicating through the coil**." (Ex.

---

reception/communications through L2 also teach the claimed "**communication receiver circuit**." (Ex. 1002, ¶92.)

1002, ¶93.) For instance, *Sogabe* discloses "detection circuit 59 detects data transmitted from the power transmission device 10" using frequency modulation, and that the L1 coil induces voltages in the L2 coil via electromagnetic coupling. (Ex. 1005, 6:65-7:4, 7:15-21, 8:58-62, 10:18-27, FIG. 2; Ex. 1002, ¶93.) Similarly, *Sogabe* discloses that "frequency detection circuit 60, on the power receiving side, detects [a] frequency change so as to determine" whether PTD10 transmitted "data" as a "1'' or "0" via electromagnetically coupled coils L1 and L2. (Ex. 1005, 6:65-7:4, 7:15-21, 8:58-62, 10:18-27, 22:8-11, 23:44-45, 23:60-24:17, FIG. 9; Ex. 1002, ¶93.) Thus, detection circuit 59/60 is "**electrically coupled to the inductive charging receiver coil for communicating through the coil**" so as to receive data from PTD40. (Ex. 1002, ¶93.) Moreover, as noted above, detection circuit 59/60 together with other circuitry within PRD40 that connect to coil L2 to facilitate receiving communications from primary coil L1 (*e.g.*, one or more circuits in power receiving section 42, etc.) exemplify the claimed "**communication receiver circuit**." (Ex. 1002, ¶¶93-94.)

e) a microcontroller, wherein the microcontroller is configured for:

Sogabe in view of *Azancot* discloses and/or suggests this limitation. (Ex. 1002, ¶¶95-106.) *Sogabe* discloses that a controller 52 controls PRD40 of cell phone 501, etc. (Ex. 1005, 8:42-53 ("controller 52 (on the power receiving side) controls the power receiving device 40 and the power receiving control device 50"), 22:8-11,

FIGS. 2, 9.) Further, *Sogabe* discloses that controller 52 may be "realized by an ASIC circuit such as a gate array, a micro computer with a program operating on the micro computer, or the like." (*Id.*, 8:46-48.) (Ex. 1002, ¶95.)

Although *Sogabe* discloses/suggests that controller 52 may be implemented using standard controller technologies (via an ASIC "or the like"), *Sogabe* does not explicitly state that its wireless power receiver controller can be implemented using a "microcontroller." Nonetheless, a POSITA would have been motivated, and found it obvious, to configure *Sogabe*'s device/system with such a microcontroller, like that claimed. (Ex. 1002, ¶96.)

As an initial matter, a POSITA would have understood that the "ASIC circuit" and "micro computer" disclosed by *Sogabe* as the controller 52 would correspond to, or could be implemented as, a "microcontroller." The '777 patent does not provide detailed implementation details regarding the claimed "microcontroller" and instead presents the microcontroller in a functional sense, thereby evidencing that a POSITA would have been aware of using microcontrollers and would have understood how to implement such microcontrollers to perform certain tasks associated with wireless power transfer. (*See, e.g.*, Ex. 1001, 12:58-13:8, 14:4-9; Ex. 1002, ¶97.)

Moreover, it was well-known in the art to use a microcontroller to control wireless power devices. (Ex. 1002, ¶98.) For instance, *Walley* confirms a POSITA's

state-of-art knowledge of using a "micro-controller" to control a wireless power transmitter or receiver that is capable of operating using different protocols. (Ex. 1007, 3:47-55 ("The processing modules...of the WP [wireless power] TX unit 10 and in each of the devices 12-14 may each be a….micro-controller."), 4:14-21 ("The WP TX unit 10 communicates with the WP transceivers 24, 30 of the devices 12-14 via….one or more…protocols."), FIG. 1.) Such microcontroller use was well-understood before the alleged time of invention. (Ex. 1002, ¶98; *see, e.g.*, Ex. 1012, ¶¶0059, 0061; Ex. 1013, ¶¶0023-0024; Ex. 1014, FIGS. 10-11.)

As one such example, *Azancot* discloses using a microcontroller to control a wireless power system. (Ex. 1002, ¶99.) Similar to *Sogabe*, *Azancot* relates to a contactless, inductive power device/system. (Ex. 1006, 1:17-19 ("The present invention relates to…controlling power transfer across an inductive power coupling."), 8:44-47, FIGS. 1, 2a; *see also id.*, 8:60-9:30, 1:38-53.)

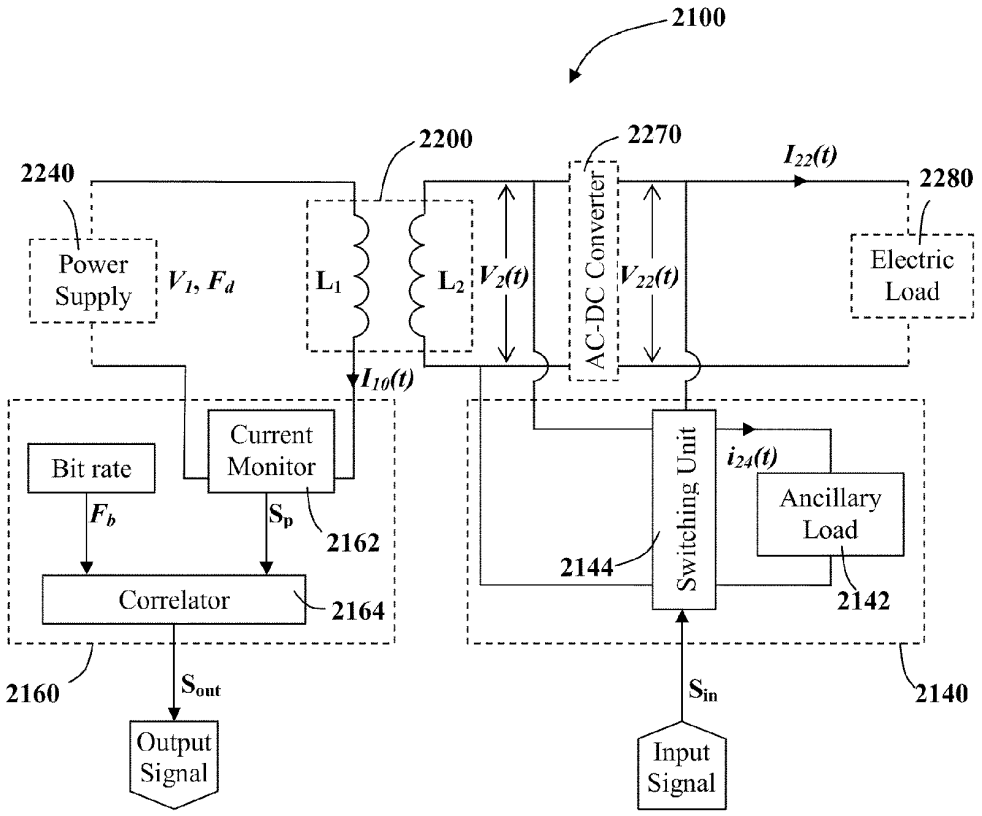

Fig. 2a

(*Id.*, FIG. 2a.)

Similar to the *Sogabe* device (§§IX.A.1.a-d), *Azancot* discloses that the device receiving wireless power includes a circuit 2140 that comprises microcontroller 2146 (illustrated below), which is used to control power that a secondary coil L2 wirelessly receives across an inductive/contactless energy coupling 2200. (Ex. 1006, 9:3-7, 10:4-18, FIGS. 2a-2b.) (Ex. 1002, ¶100.)

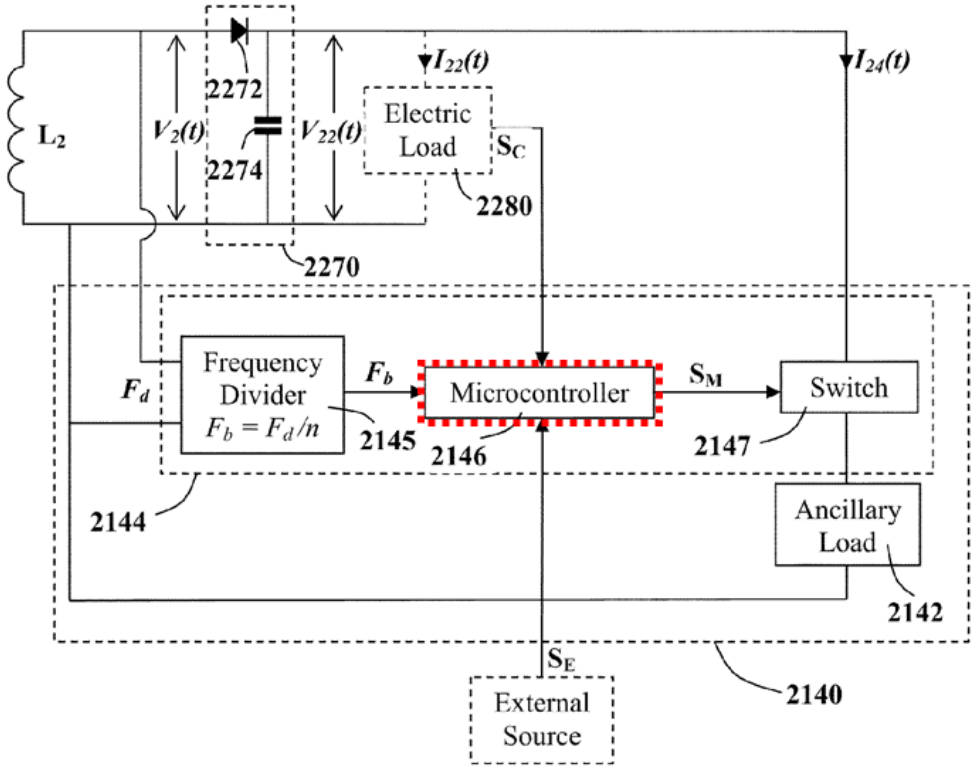

Fig. 2b

(*Id.*, FIG. 2b (annotated).)

Microcontroller 2146 of the power receiving side transmits signals across inductive/contactless energy coupling 2200 to control the power that the power transmitting side outputs. (*Id.*, 8:9-11, 8:60-9:2, 10:11-37, 11:4-14, FIGS. 2a-2b.) Microcontroller 2146 modulates/encodes signals S_C / S_E, which relate to load parameters and external data that are transmitted from the power receiving device across the inductive coupling to the wireless power transmitting device. (*Id.*, 9:58-63, 10:11-37, FIGS. 2a-2b.) Current monitor 2162 and correlator 2164 of the power transmission side receive the signals and output S_{OUT} signals to a microcontroller

2168 on the power transmission side. (*Id.*, 10:38-52, 11:4-14, FIGS. 2a, 2c-2d.) Then microcontroller 2168 (power transmission side) extracts the S_C/S_E signals from the power receiving side from the S_{OUT} signal, such that a power source is controlled accordance with the receiver's S_C/S_E signals. (*Id.*, 10:20-32, 10:38-55, 11:4-14, FIGS. 2a, 2c-2d; Ex. 1002, ¶101.)

In view of such teachings in context of a POSITA's state-of-art knowledge, a POSITA would have been motivated to configure *Sogabe*'s device/system to include a microcontroller for controlling *Sogabe*'s power receiving device, which as demonstrated above, was a common way to control circuits/operations in inductive power transfer systems. (Ex. 1002, ¶102.) Indeed, a POSITA would have been motivated to do so for several reasons, including, *e.g.*, to save cost, reduce implementation complexity, and/or achieve other understood benefits associated with such well-known microcontroller use. (Ex. 1002, ¶102; Ex. 1028, 4:3-6 ("Numerous advantages are realized by using a microcontroller unit, including greatly increased cost savings, significant design simplification and size reduction of the overall system."); Ex. 1027, ¶0032 (noting that microcontrollers may be "inexpensive" and "low-power"); Ex. 1014, ¶0192 ("another inexpensive microcontroller"), ¶0295 ("10F220 Programmable IC by Microchip Inc. or another inexpensive microcontroller").) Microcontroller-based implementations would have been advantageous because such implementations could be taken to market

easily, were inexpensive, streamlined development, and supported robust feature flexibility. (Ex. 1015, 3, 6; *see also* Ex. 1026 (noting that microcontrollers are "cheap and very easy to interface to real world devices").) Moreover, a POSITA would have appreciated that implementing *Sogabe*'s controller with a microcontroller would have been no more than an obvious and simple substitution to obtain a predictable microcontroller-based implementation. *KSR Int'l Co. v. Teleflex Inc.*, 550 U.S. 398, 417 (2007).

A POSITA would have had the skills and rationale to configure, and a reasonable expectation of success in implementing, such a modification in the *Sogabe* device/system. (Ex. 1002, ¶¶103-105.) For instance, a POSITA would have appreciated how *Sogabe* contemplates standard hardware types to implement the controller (Ex. 1005, 8:44-48), and how *Azancot*, consistent with state of art knowledge, disclose using microcontrollers to control similar wireless power systems. Nothing would have been particularly complicated about using a microcontroller to control such a wireless power device/system. (Ex. 1002, ¶104; Ex. 1007, 3:47-55, 4:14-21, FIG. 1; Ex. 1012, ¶¶0059, 0061; Ex. 1013, ¶¶0023-0024; Ex. 1014, FIGS. 10-11.) Thus, the resulting electronic device would have been a predictable combination of known components according to known methods (*e.g.*, using a microcontroller to control a wireless power system), and would have

predictably led to a microcontroller of an electronic device for controlling wireless power. (Ex. 1002, ¶105.) *See KSR*, 550 U.S. at 416.

Such reasons, motivations, and expectation of success relating to implementing such a "microcontroller" in the modified *Sogabe* device are applicable to the explanations below regarding both the first mode of operation (*see* claim elements (f)-(h) and (m)-(n)) and the second mode of operation (*see* claim elements (i)-(l) and (m)-(n)). Thus, for the same reasons explained here, and those respectively below, a POSITA would have been motivated to configure such "microcontroller" to operate in the "first mode of operation" and "second mode of operation" as claimed in claim 15. (*See* §§IX.A.1.f-n; Ex. 1002, ¶106.)

f) operating in a first mode of operation using a first protocol, wherein the first protocol is an inductive charging communication-and-control protocol that comprises uni-directional messaging, wherein the first mode of operation comprises:

Sogabe in view of *Azancot* discloses and/or suggests this limitation. (Ex. 1002, ¶¶107-121.) Namely, *Sogabe* discloses a two-stage charging operation that allows different power receiving devices to be supported by the charger. The first stage corresponds to a setup stage and the second stage corresponds to normal power transmission, where information sent by the receiving device during the setup stage is used to control power transmission and communication with the receiving device

during the normal stage. (Ex. 1005, 3:54-4:65, 9:7-15, 10:38-54, 11:56-12:13.) (Ex. 1002, ¶107.)

During the setup stage, *Sogabe* discloses that information, which *Sogabe* refers to as a "communication condition," is sent from the receiving device to the transmission side via "communication processing using the initial communication condition before the start of normal power transmission, thereby setting the communication condition used in a communication processing after the start of normal power transmission," where the information can be included in a setup frame. (*Id*., 11:33-55.) *Sogabe* also discloses that the power receiving device 40 transmits a "start frame" during the setup stage. (*Id.*, 16:14-16, 25:64-26:2, FIG. 12, S31.) Transfer of communication condition and start frame information from the receiving device to the transmitting device is performed "under the initial communication condition before the start of normal power operation," whereas "communication after the start of normal power transmission can be performed by using the communication condition." (*Id*., 11:56-61.) (Ex. 1002, ¶108.)

During setup processing, a communication condition setting section 34 and a communication processing section 36 included in the controller 22 set the communication condition in the transmitter, where the communication condition can include information regarding the communication method to use after normal power transmission begins (*e.g.*, load modulation or frequency modulation) as well as

information regarding desirable power transmission levels for the receiver device (*e.g.*, 0.5 watts or 15 watts), that is later used during normal power transmission mode. (*Id.*, 10:45-11:16, 12:14-37.) (Ex. 1002, ¶109.)

Accordingly, the setup processing of *Sogabe* corresponds to the claimed "first mode of operation," where the claimed "first protocol" corresponds to *Sogabe's* setup stage communication method that uses the initial communication condition before the start of normal power transmission. (Ex. 1002, ¶110.) As discussed above and further demonstrated below, *Sogabe*'s setup communication method is an "inductive charging communication-and-control protocol" as it is a communication protocol that controls the inductive charging operations in *Sogabe*'s device/system.[10] (*See infra* §§IX.A.1.g-h.) As explained previously, the *Sogabe-Azancot* device comprises a microcontroller that controls the operation of PRD40 of cell phone 501 (or a similar wireless power receiving apparatus). (§IX.A.1.e; Ex. 1005, 8:44-53, FIGS. 2, 9.) Consistent with that explained above (and with *Sogabe-Azancot*), the

[10] In a parent application, PO explained that a charging protocol may be a specific "frequency of operation" point or include a specific "communication method, message structure, etc." (Ex. 1017, 88-89.) Whether under their plain meaning or this interpretation, the *Sogabe-Azancot* combination discloses/suggests the claimed features here.

microcontroller in the modified device/system would have been configured to control and operate the power receiving device. As such, the microcontroller in the *Sogabe-Azancot* combination would have been configured for "operating in a first mode of operation using a first protocol" as recited in claim element 15(f) and the other claim elements (for reasons explained here and below). (§§IX.A.1.g-h.) For similar reasons, and those respectively below, a POSITA would have been motivated to configure the "microcontroller" in the modified *Sogabe* device to operate in such a first mode of operation that includes processes like those recited in claim elements 15(g)-(h) and (m)-(n). (*See* §§IX.A.1.g-h, m-n.). (Ex. 1002, ¶111.)

Furthermore, *Sogabe*'s setup stage communication method "includes uni-directional messaging" as claimed, because it includes information being sent from the receiving device to the transmission device ("uni-directional messaging"), such as the communication condition and start frame information discussed previously. (Ex. 1002, ¶112; Ex. 1005, 11:33-55, 16:14-16, 25:64-26:2.)

FIG. 4A

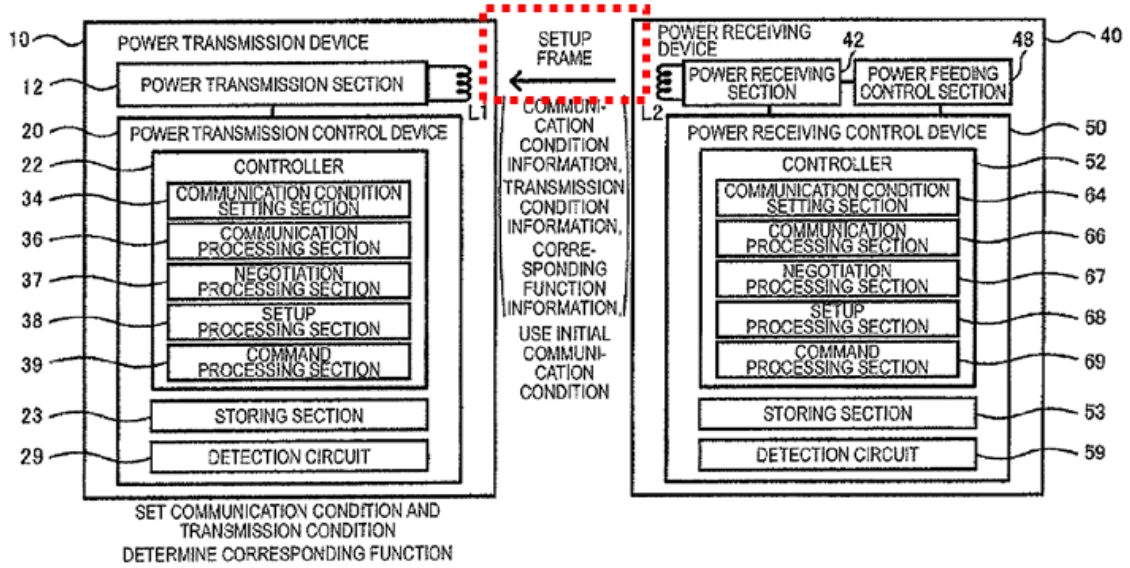

(Ex. 1005, FIG. 4A (illustrating uni-directional messaging during setup operation).)

Even if *Sogabe* is found to (or it is argued to) perform bi-directional messaging during the setup stage, the disclosure of *Sogabe* makes clear that uni-directional messaging supports the transfer of the information during the setup phase, as the information is provided from the power receiver to the power transmission device. (Ex. 1005, 9:31-37 ("The embodiment is not limited to the case where communication condition information (transmission condition information) is transmitted to the power transmission device 10 from the power receiving device 40, and is also applicable to a case where communication condition information is transmitted to the power receiving device 40 from the power transmission device 10.").) (Ex. 1002, ¶113.)

While *Sogabe* discloses that in the embodiment shown in Figures 4A and 4B setup frames are sent both from the power receiving device to the power transmission device, as explained by *Sogabe*, the setup frame associated with figure 4B includes functions that are not required for operation; the information included in the setup frame of figure 4A differs from the information that is included in the setup frame of figure 4B. (*Id.*, 21:16-20, 21:55-22:6, FIGS. 4A-B; Ex. 1002, ¶113.) Additionally, the, the power receiving device 40 sends the "start frame," which is never sent by the power transmission device. (Ex. 1005, 16:14-16, 25:64-26:2, FIG. 12, S31.) And neither of the communication condition and start frame information necessitates responsive signaling, such that the first mode comprises uni-directional messaging. (*Id.*, 11:33-55, 16:14-16, 25:64-26:2, FIGS. 11-12.) (Ex. 1002, ¶113.)

Moreover, even if *Sogabe* were to disclose bi-directional messaging during the setup phase, claim 15 of the '777 patent simply requires that the protocol "***comprises*** uni-directional messaging," where bi-directional (two-way) messaging clearly ***includes*** uni-directional (one-way) messaging. Such an understanding is supported by claim element 15(i), which recites a "second protocol" that "***defines*** bi-directional messaging." (Ex. 1002, ¶114.) This understanding is consistent discussions in the '777 patent. (Ex. 1001, 14:52-58 ("In the above description, **a uni-directional communication** (from the receiver to the charger) **is described**. However, **this communication can also be bi-directional**….").) (Ex. 1002, ¶114.)

Even if claim element 15(f) is interpreted such that only uni-directional messaging can be used in the first protocol, to the extent not already disclosed by *Sogabe*, a POSITA would have found it obvious to configure the *Sogabe-Azancot* system/device to provide features (such a protocol) based on *Sogabe*'s teachings in view of *Azancot*. For reasons explained above, in the modified device/system, the information regarding what communication method and the charging parameters are to be used after the start of normal charging is provided by the receiver to the transmitter, and therefore such communications only require uni-directional communication from the receiver to the transmitter. A POSITA would have understood that bi-directional communication is not required to support such functionality and thus, in light of *Sogabe-Azancot* combined teachings, such a person would have found it obvious to use uni-directional communication in the modified system/device to simplify the setup process. (Ex. 1002, ¶115.)

Moreover, to the extent using only uni-directional messaging is not disclosed or suggested by *Sogabe* alone, it would have been obvious in view of *Azancot*. As discussed above in Section IX.A.1(e), *Azancot* discloses uni-directional messaging from the power receiving device to the power transmitting device to control the power transmission. (*Supra* §IX.A1(e); Ex. 1006, 8:60-65, 9:58-63, 10:11-11:14, FIGS. 2a-2d.) Therefore, similar to *Sogabe*, *Azancot* discloses sending power transmission control information from the power receiving device to the power

transmitting device. Such information in *Azancot* is sent using uni-directional messaging, and, in view of *Azancot*'s teachings and in context of the state of the art, a POSITA would have found it obvious to use uni-directional messaging for the setup communications in the modified *Sogabe* device/system. (Ex. 1002, ¶116.)

A POSITA would have had good reason for having *Sogabe*'s first protocol "comprise[] uni-directional messaging." (*Id.*, ¶117.) For instance, having the first protocol comprise uni-directional messages, similar to those disclosed by *Azancot*, would have allowed the *Sogabe* device/system to dynamically meet the power needs of the power receiving device to better address changing load conditions, voltage and current needs, temperature conditions, etc. (*Id.*, ¶117; Ex. 1006, 10:20-37, 3:4-22, 7:21-37.) Indeed, having the first protocol comprise such uni-directional control messages would have increased responsiveness by preventing a lengthy power negotiation process that *Sogabe* discloses and prevented improper powering conditions. (Ex. 1002, ¶117; Ex. 1005, FIG. 6; Ex. 1006, 10:20-37, 3:4-22, 7:21-37.)

Moreover, allowing the power receiving device to send such uni-directional control messages would have increased the interoperability and compatibility of the *Sogabe* wireless power receiving device with uni-directional messaging systems like those disclosed by *Azancot* and others, which was a desired feature before the alleged time of invention. (Ex. 1002, ¶¶118-120; Ex. 1005, 1:33-41, 1:66-2:9, 9:24-37,

11:12-16; Ex. 1007, 1:63-67; Ex. 1029, 1:52-58; Ex. 1008 (disclosing a similar wireless power system comprising uni-directional messaging); Ex. 1010 (same).) A POSITA would have also appreciated that using uni-directional power control messages in the first mode of operation would have reduced communication complexity while still allowing the remote device to take full control of power transfer. (Ex. 1002, ¶¶118-120; Ex. 1006, 10:20-37, 3:4-22, 7:21-37; Ex. 1010 (noting that a wireless power protocol comprising uni-directional messaging was "simple" but still enabled a "Mobile Device to take full control of the power transfer").)

A POSITA would have had a reasonable expectation of success in implementing the above configuration where the first protocol comprising "uni-directional messaging." (Ex. 1002, ¶121.) For instance, *Sogabe* suggests that a variety of conventional controller hardware types would have been appropriate to realize controller 22 and process various signals in a first mode of operation. (Ex. 1005, 8:46-48, FIGS. 3A-5C). And *Azancot* discloses using a microcontroller to control similar wireless power devices/systems with uni-directional messaging as previously discussed. Thus, the resulting electronic device that receivers power would have been a predictable combination of known components according to known methods (*e.g.*, using a microcontroller to encode unidirectional signals), and would have produced the predictable result of an electronic device that receives

wireless power that includes a microcontroller operating in a first mode with a first protocol that "comprises uni-directional messaging." (Ex. 1002, ¶121.) *See KSR*, 550 U.S. at 416.

g) sending, using the communication transmitter circuit, a first communication to an inductive charger, wherein the first communication identifies the first protocol; and

Sogabe in view of *Azancot* discloses and/or suggests this limitation. (Ex. 1002, ¶¶122-127.) *Sogabe* discloses "**sending**" communications from a power receiving device 40 "**using the communication transmitter circuit**" because, as explained previously, load modulation section 46 ("**communication transmitter circuit**") transmits data to power transmission device 10 ("**inductive charger**"). (§§IX.A.1.a, c.) Such communications include the "communication condition information" or the "start frame" sent during the setup stage ("first communication"). (§IX.A.1.f; Ex. 1005, 2:23-46, 28:11-29.) Because the communication is sent during the setup stage, it is "based on the first protocol," which, as discussed above in Section IX.A.1(f), uses the initial communication condition (default condition) that is used before the start of normal power transmission. (Ex. 1005, 11:23-10:13, 15:32-50.) (Ex. 1002, ¶122.)

Sogabe explains that the "communication condition information" sent during the setup stage can be sent using a "setup frame." (*Id*., 11:50-55, 15:32-50; Ex. 1002, ¶123.) An example setup frame is shown in Figure 8 below. (*Id*., 5:32.)

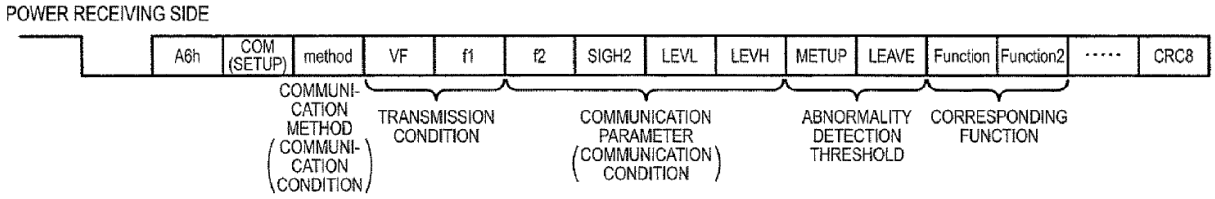

(*Id.*, FIG. 8 (excerpted).)

The communication ("**first communication**") by which the communication condition is sent (*e.g.*, setup frame) "**identifies the first protocol**" as claimed because it is presented in a format that can be recognized by the power transmission device to which it is sent. (Ex. 1002, ¶124.) As a POSITA would have appreciated, the device receiving the setup frame above would need to know the format of the frame in order to understand what the different information in the frame is and where it is located within the frame format. (*Id.*) Such an understanding is consistent with the limited disclosure of the '777 patent as to what might constitute "identif[ying] the first protocol." (Ex. 1001, 20:29-51, 21:48-59, 22:8-14, 63:29-35.) More specifically, the '777 patent does no more than explain that a charger can decode protocol communications, such that an encoded signal identifies a protocol as claimed. (*Id.*, 22:8-14 ("In accordance with an embodiment, the **charger can** be implemented so that it is able to **decode** and implement **multiple communication and regulation protocols** and respond to them appropriately. **This enables the charger to be** provided as **part of a multi-protocol system**, and to operate with different types of receivers, technologies and manufacturers.").)

To the extent the combination does not disclose that the communications "identif[y] the first/second protocol," it would have been obvious to include such protocol identifying information in the communication of the modified device/system. (Ex. 1002, ¶125.) Indeed, it was well-known, if not conventional, to include protocol identifying information in wireless communications. (Ex. 1002, ¶125; *see, e.g.*, Ex. 1010 (Qi Wireless Power Standard), 52 ("The preamble consists of a minimum of 11 and a maximum of 25 bits, all set to ONE, and encoded as defined in Section 6.2.2. The preamble enables the Power Transmitter to synchronize with the incoming data and accurately detect the start bit of the header."); Ex. 1055, 6:14-22; Ex. 1056, ¶0035 ("identifies the type of protocol based upon the protocol header within the packet"); Ex. 1057, ¶0005; Ex. 1058, 2:57-62 ("The signal processing module may also add a pattern of bits into the digital signal that identifies the analog transmission protocol."); Ex. 1059, ¶0056; Ex. 1060, ¶0010 ("In one embodiment, a mobile device for seamless multimode wireless communication over a plurality of wireless communication systems is disclosed….The packet data units have a header with a wireless protocol identifier…."); Ex. 1061, ¶0019 ("The protocol sensing module identifies network protocols by analyzing periodic frame headers and preambles.").) Such protocol identifying information would have enabled the transmitter to receive data efficiently without having to determine the protocol of a message through another means (*e.g.*, another communication channel

or trial and error processing) that would add further complexity and cost to the device/system, as understood in the art. (Ex. 1002, ¶125; Ex. 1007, 6:22-7:4 ("…**identify the control channel protocol by scanning a frequency spectrum** for control channel activity….As yet another alternative,…the receive unit processing module 26, 32 may **identify the control channel protocol by evoking a trial and error system** using known control channel protocols."); Ex. 1056, ¶¶0015-16.) It also would have increased the compatibility of *Sogabe*'s electronic device by easily allowing transmitters to recognize how to charge or communicate with the *Sogabe* device, which was a desired feature before the alleged time of invention. (Ex. 1002, ¶125.)

In the above-discussed modified system/device, such communications would have been sent by the microcontroller using load modulation section 46 ("communication transmitter circuit"). (§§IX.A.1.c, e-f; Ex. 1005, 8:13-22, 8:44-53, 23:10-26, FIGS. 2, 9, 14A; Ex. 1006, FIGS. 2A, 2B, 2D; Ex. 1002, ¶126.) Thus, for reasons explained here and above (§§IX.A.1.a-IX.A.1.f), a POSITA would have thus been motivated, and found obvious to configure the "microcontroller" in the above *Sogabe-Azancot* modified device (§IX.A.1.e) to perform similar features as discussed above and claimed ("[microcontroller configured for] sending, using the transmitter circuit,…"). (Ex. 1002, ¶126.)

A POSITA would have had the skills and rationale in light of the teachings/suggestions of *Sogabe*, *Azancot*, in context of a person of ordinary skill in the art's state of art knowledge, to implement such features while considering design tradeoffs and techniques/technologies with a reasonable expectation of success, especially given such modification would have involved known technologies/techniques as explained, foreseeably resulting in an electronic device having a microcontroller operating in a first mode of operation like that claimed in this claim element (and below), consistent with the teachings and suggestions of *Sogabe* and *Azancot.* (*See* §§IX.A.1.a-f and in §§IX.1.h-p; Ex. 1002, ¶127.)

h) receiving power using the inductive charging receiver coil;

Sogabe in view of *Azancot* discloses and/or suggests this limitation. (Ex. 1002, ¶128.) As discussed previously, *Sogabe* discloses that the electronic device comprises "secondary coil L2" ("**inductive charging receiver coil**"). (§IX.A.1.b; Ex. 1005, 6:50-57, FIGS. 2, 9; *see also id.*, 6:23-38, FIGS. 1B-1C.) The secondary coil L2 receives wireless power from a primary coil L1 of PTD10 during both the normal power transmission mode and the setup power transmission mode ("**first mode of operation**") (Ex. 1005, 6:50-55, 6:65-7:25, 8:23-35, 11:66-12:13, 14:36-51, 16:14-29, FIGS. 1B-1C, 3A, 5A; Ex. 1002, ¶128.) For reasons explained, a POSITA would have been motivated to configure the *Sogabe-Azancot* combination such that the "microcontroller" in the modified *Sogabe* device/system would have

been configured to operate in the first mode of operation to receive power using secondary coil L2. (§IX.A.1.e; Ex. 1005, 6:3-14, FIGS. 2, 9; Ex. 1002, ¶128.)

FIG. 3A

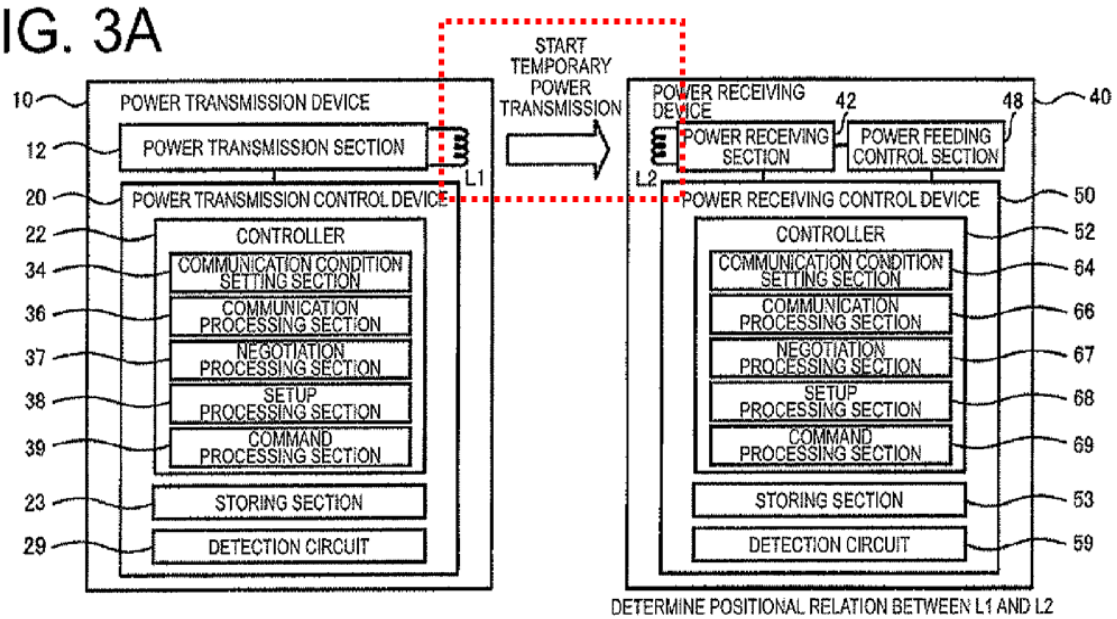

(Ex. 1005, FIG. 3A (annotated).)

i) operating in a second mode of operation using a second protocol, wherein the second protocol is an inductive charging communication-and-control protocol that defines bi-directional messaging, wherein the second mode of operation comprises:

Sogabe in view of *Azancot* discloses and/or suggests this limitation. (Ex. 1002, ¶¶129-134.) As discussed above in Section IX.A.1(f), *Sogabe* discloses a two-stage charging operation, where the first stage corresponds to the setup stage, and the second stage corresponds to normal power transmission, where the information sent by the receiving device during the setup stage is used to control power

transmission and communication during the normal power transmission stage. (*Supra* §IX.A.1.f; Ex. 1005, 3:54-4:65, 9:7-15, 10:38-54.) (Ex. 1002, ¶¶129.)

Therefore, *Sogabe* discloses operating in a normal power transmission mode, where the claimed "second mode of operation" includes either (1) the normal power operation mode either by itself, or (2) the normal operation mode and the setup stage that constitutes the "first mode of operation." (Ex. 1002, ¶130.) The second operation mode including the first operation mode is consistent with claim 5 of the '777 patent, which states that "the first mode of operation is a subset of the second mode of operation." (Ex. 1001, 71:11-12 (claim 5).)

A POSITA would have had similar reasons, motivations, and expectation of success as explained above for claim element 15(e) regarding implementing and configuring a "microcontroller" in the modified *Sogabe* device to perform the second mode of operation (and addressed below for claim elements (i)-(n)). Thus, for the same reasons explained, and those respectively here, and below for associated "second mode" claim elements, a POSITA would have been motivated to configure the "microcontroller" in the modified *Sogabe* device to operate in the "second mode of operation" as claimed in claim 15. (*See* §IX.A.1.j-n; Ex. 1002, ¶131.)

In the normal power transmission mode, the communication method used is determined based on the communication condition received during the setup stage. (Ex. 1005, 9:16-64, 11:33-55, 12:14-37.) *Sogabe* discloses that the transfer of

information from the receiving device to the transmitting device is performed "under the initial communication condition before the start of normal power operation" ("first protocol") whereas "communication after the start of normal power transmission can be performed by using the communication condition" ("second protocol"). (*Id.*, 11:56-12:13.) For example, *Sogabe* discloses that the communication condition defines how the PRD40 communicates with the power transmission device 10 during normal power transmission. (*Id.*, 9:38-61, 10:6-17, 16:30-36.) (Ex. 1002, ¶132.)

Sogabe further discloses that communication during the normal power transmission "defines" "bi-directional messaging." (Ex. 1002, ¶133.) Namely, in the normal power mode "[t]he communication processing sections 36 and 66" of the power transmission device 10 and power receiving device 40 "perform….a processing transmitting data to the power receiving device 40 from the power transmission device 10, and another processing transmitting data to the power transmission device 10 from the power receiving device 40." (*Id.*, 10:6-17, FIG. 5.) These bi-directional data messages are transmitted in accordance with the normal communication condition and such messages are illustrated below in figure 5B. (*Id.*, 10:6-17, 11:56-61, 16:30-36, 21:6-12, 24:17-23.) (Ex. 1002, ¶133.)

FIG. 5B

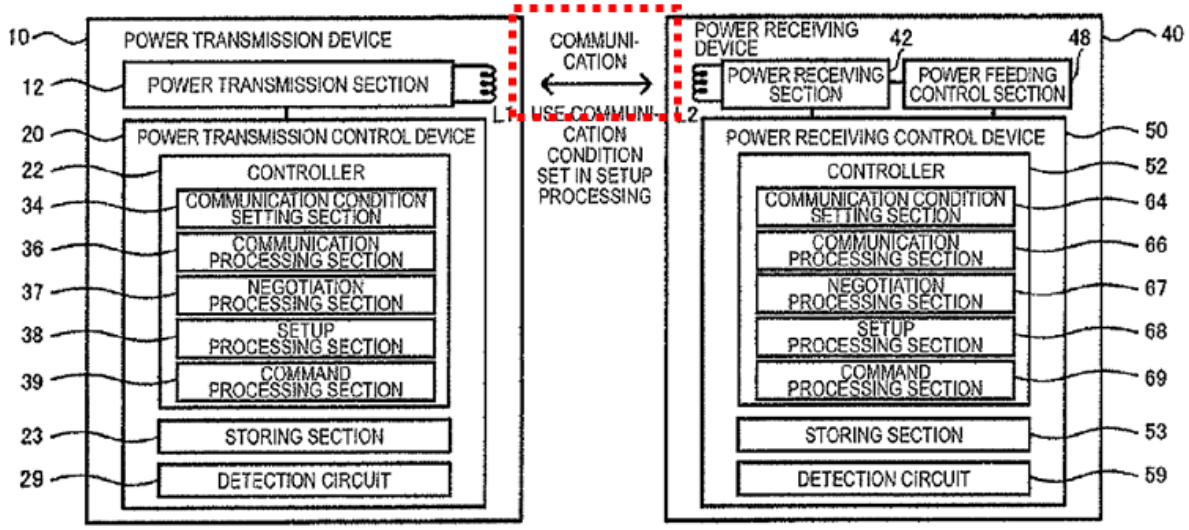

(*Id.*, FIG. 5B (illustrating bi-directional messaging during normal operation).)

As explained, the *Sogabe-Azancot* device/system comprises a "microcontroller" that controls the operation of PRD40 of cell phone 501 (or a similar wireless power receiving apparatus). (§IX.A.1.e; Ex. 1005, 8:44-53, FIGS. 2, 9.) Given that a microcontroller of the *Sogabe-Azancot* device/system controls and operates the power receiving device, *Sogabe* in view of *Azancot* discloses and/or further suggests the microcontroller is configured for "operating in a second mode of operation using a second protocol" as claimed (including the processes/features discussed below) for the reasons discussed above and those below. (Ex. 1002, ¶134; *supra* (this limitation), IX.A.1.c, IX.A.1.e; *infra* §§IX.A.1.j-IX.A.1.n.)

A POSITA would have had the skills and rationale in light of the teachings/suggestions of *Sogabe*, *Azancot*, and the context of state of art knowledge,

to implement such features while considering design tradeoffs and techniques/technologies with a reasonable expectation of success, especially given such modification would have involved known technologies/techniques as explained, foreseeably resulting in an electronic device having a microcontroller operating in a second mode of operation like that claimed in this claim element (and below), consistent with the teachings and suggestions of *Sogabe* and *Azancot.* (*See* §§IX.A.1.a-h and in §§IX.1.j-n; Ex. 1002, ¶134.)

j) sending, using the communication transmitter circuit, a second communication to the inductive charger, wherein the second communication identifies the second protocol;

Sogabe in view of *Azancot* discloses and/or suggests this limitation. (Ex. 1002, ¶¶135-139.) *Sogabe* discloses "**sending**" various communications from a power receiving device 40 "**using the communication transmitter circuit**" because, as explained previously, load modulation section 46 ("**communication transmitter circuit**") transmits data to power transmission device 10 ("**inductive charger**"). (§§IX.A.1.a, IX.A.1.c, IX.A.1.g, IX.A.1.i) (Ex. 1002, ¶135.)

Such communications ("second communication") include, for example, a "full charge detection" command, an "interrupt request" sent from the power receiving device to the power transmission device, and a "periodic authentication" performed by the power receiving device as disclosed by *Sogabe*. (Ex. 1005, 3:4-16, 9:62-10:5, 26:23-43, 13:52-58, 17:3-47; 19:55-59, 19:60-20:4.) For reasons

previously explained, the microcontroller in the *Sogabe-Azancot* combination would have been configured to perform/provide similar features. (*Id.*; Ex. 1002, ¶¶136-137; §IX.A.1.i.)

Sogabe in view of *Azancot* further discloses and/or suggests "**wherein the second communication identifies the second protocol**" for reasons similar to those explained for the first sending limitation 1(g) regarding the first communication identifying the first protocol, and those above relating to the microcontroller's configuration to provide/perform features like those recited in limitations 1(i)-(j) (above). (Ex. 1002, ¶138.) The periodic "authentication" communication ("second communication") sent to the inductive charger (Ex. 1005, 28:53-29:50) identifies the protocol used during normal power mode as the charger that receives that communication and is able to determine the content of such a communication based on the format and content of the communication. (*See* §IX.A.1(g).) Similarly, the charger that receives the "full charge detection" command, "normal power transmission start command" to restart the normal power transmission, or an "interrupt request" sent from the power receiving device will understand what protocol such communications are using. (Ex. 1002, ¶138.) This understanding is consistent with the limited disclosure of the '777 patent as to what might constitute "identif[ying] the second protocol." (Ex. 1001, 20:29-51, 21:48-59, 22:8-14.) More specifically, the '777 patent does no more than explain that a charger can decode

protocol communications, such that an encoded signal identifies a protocol as claimed as discussed previously. (*Id.*, 22:8-14; §IX.A.1.g.) Moreover, sending protocol identification information so as to identify the second protocol used in the normal or setup modes also would have been obvious for reasons previously explained. (§IX.A.1.g; Ex. 1002, ¶138.)

In the modified *Sogabe* device/system, such communications would have been also sent by the above-discussed microcontroller using load modulation section 46 ("**communication transmitter circuit**"). (§§IX.A.1.c, e-f; Ex. 1005, 8:13-22, 8:44-53, 23:10-26, FIGS. 2, 9, 14A; Ex. 1006, FIGS. 2A, 2B, 2D; Ex. 1002, ¶139.) Thus, for similar reasons explained here, and those explained above, a POSITA would have been motivated, and found obvious to configure the "microcontroller" (§IX.A.1.e) in the *Sogabe-Azancot* device/system for sending a second communication that identifies the second protocol, like that recited in claim element 1(j).

A POSITA would have had the skills and rationale in light of the teachings/suggestions of *Sogabe* and *Azancot*, in context of such a skilled person's state of art knowledge, to implement such features while considering design tradeoffs and techniques/technologies with a reasonable expectation of success, especially given such modification would have involved known technologies/techniques as explained, foreseeably resulting in an electronic device

having a microcontroller configured to operate in a "second mode of operation" (§IX.A.1.i) like that claimed in this claim element, consistent with the teachings and suggestions of *Sogabe* and *Azancot*. (Ex. 1002, ¶139.)

k) receiving power using the inductive charging receiver coil; and

Sogabe in view of *Azancot* discloses and/or suggests this limitation. (Ex. 1002, ¶140.) As discussed previously, *Sogabe* discloses that the electronic device comprises "secondary coil L2" ("**inductive charging receiver coil**"). (§IX.A.1.b; Ex. 1005, 6:50-57, FIGS. 2, 9; *see also id.*, 6:23-38, FIGS. 1B-1C.) Secondary coil L2 receives wireless power from a primary coil L1 of PTD10 during both the normal power transmission mode and the setup power transmission mode (*Id.*, 6:50-55, 6:65-7:25, 8:23-35, 14:36-51, 16:14-29, FIGS. 1B-1C, 3A, 5A; Ex. 1002, ¶140.), where either the normal power transmission mode alone, or the combination of the normal power transmission mode and the setup mode constitutes the "**second mode of operation**" as discussed previously (§IX.A.1.i). Thus, consistent with such teachings and reasons explained above, a POSITA would have been motivated to configure the *Sogabe-Azancot* combination such that the "microcontroller" in the modified *Sogabe* device/system would have been configured to operate in the second mode of operation to receive power using secondary coil L2. Accordingly, the combination discloses/suggests the microcontroller is configured for "receiving power" using the receiver coil L2 as claimed. (§IX.A.1.e; *see also* §§IX.A.1.h,

IX.A.1.i; Ex. 1005, 6:3-14, FIGS. 2 (above), 3A (below), 5A (below), 9 (above); Ex. 1002, ¶140.)

FIG. 3A

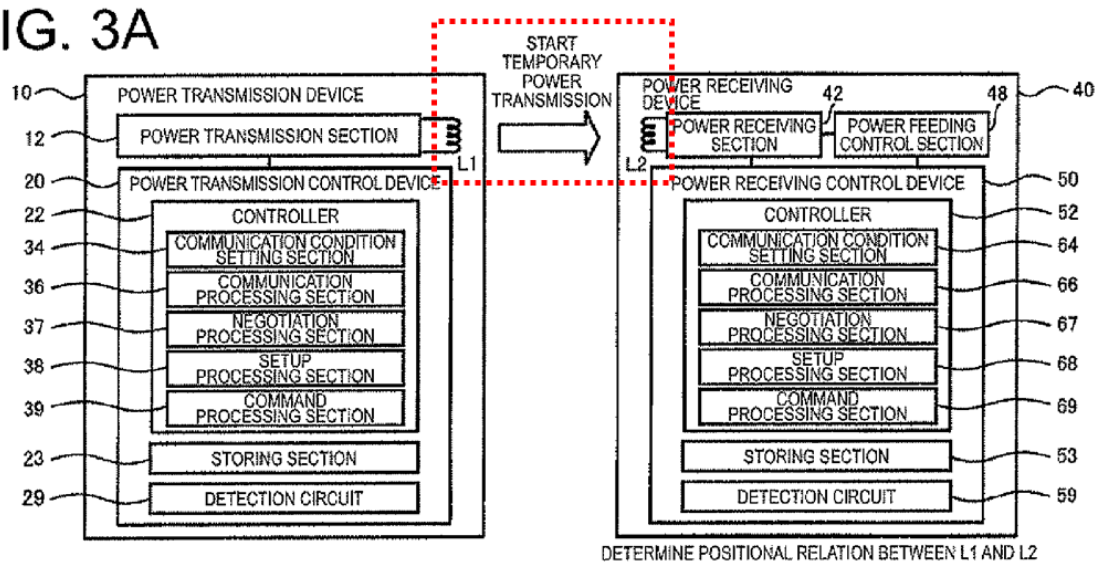

(Ex. 1005, FIG. 3A (annotated).)

FIG. 5A

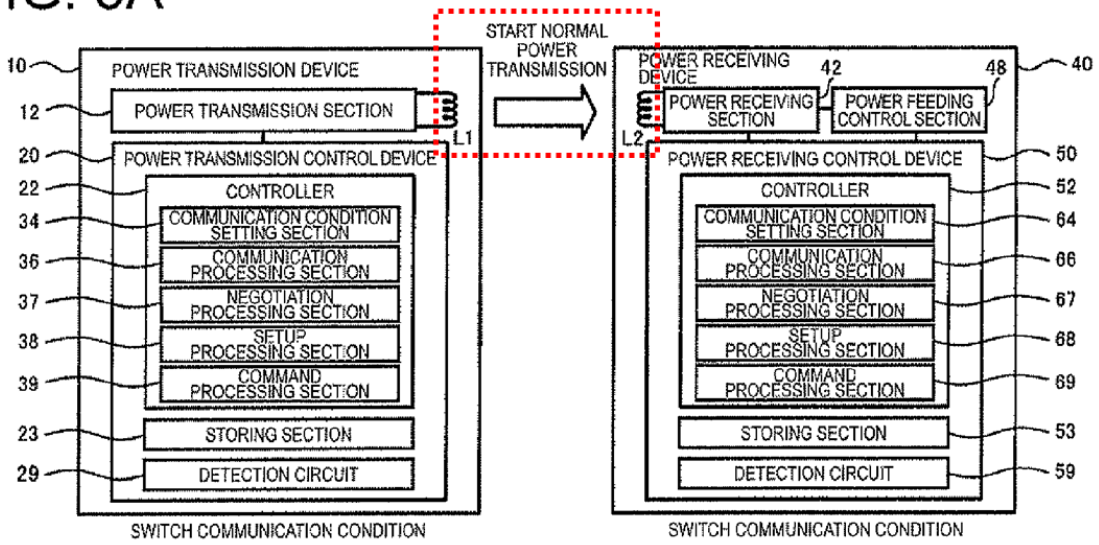

(*Id.*, FIG. 5A (annotated).)

l) receiving, using the receiver circuit, a frequency-modulated third communication from the inductive

charger based on the second protocol; and

Sogabe in view of *Azancot* discloses and/or suggests this limitation. (Ex. 1002, ¶¶141-147.) *Sogabe* in view of *Azancot* discloses the "microcontroller" (§§IX.A.1.e, IX.A.1.i) is configured for "**receiving, using the receiver circuit, a frequency-modulated third communication from the inductive charger**." (Ex. 1002, ¶141.) For instance, *Sogabe* discloses that "data communication" from the power transmission device 10 (the "**inductive charger**" as discussed previously (§§IX.A.1.c)) "to the power receiving side is realized by a frequency modulation." (Ex. 1005, 23:55-59; *see also id.*, 8:59-62; Ex. 1002, ¶141.) The frequency modulation occurs by the power transmission device changing output power frequency to send data to the power receiving device 40. (Ex. 1005, 23:60-24:3, FIG. 10A.)

Frequency modulation is used to transmit signals to the power receiving device 40 in the normal power transmission mode ("**second mode**") in accordance with communication conditions specifying frequency modulation communication. (Ex. 1005, 8:58-62, 9:38-56, 10:6-27, 11:44-12:16, 23:60-24:3, 24:18-23; Ex. 1002, ¶142.) Detection circuit 59/60 ("**receiver circuit**") of the power receiving control device 50 of the inductive charging receiver "detects data transmitted from the power transmission device 10" (Ex. 1005, 8:58-62, 23:60-24:3, FIGS. 2, 9; *supra* §IX.A.1.d; Ex. 1002, ¶143) such that any of the frequency-modulated signals that

are sent to the power receiving device 40 from the power transmission device 10 (data, interruption requests, etc.) in the second mode are a "**third communication from the inductive charger**" that is received "**using the receiver circuit**" (Ex. 1005, 10:6-17, 17:3-5, FIG. 5B).

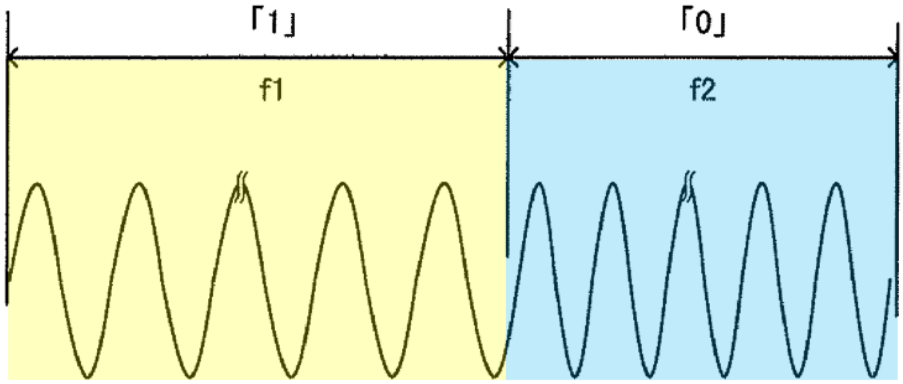

FIG.10A

(*Id.*, FIG. 10A (annotated) (illustrating an example of a frequency-modulated signal that is sent to power receiving device 40).)

Sogabe as modified by *Azancot* also discloses and/or suggests that such a "third communication" would have been received, using the receiver circuit (circuit 59/60), by the microcontroller of the electronic device. (Ex. 1002, ¶144.) For instance, *Sogabe* discloses that the controller 52 "performs" the "frequency detection" and/or other processing required for recognizing data that the power transmission device transmits and otherwise "control[ling] the power receiving device" (Ex. 1005, 8:44-53, 22:8-11, 22:28-37, 23:60-24:3, FIG. 10A; Ex. 1002,

¶144), where the controller 52 is implemented with a microcontroller per the combination (§IX.A.1.e). The microcontroller/controller of the device/system is used to process the data the transmitter transmits via frequency modulation, consistent with understood microcontroller use. (Ex. 1002, ¶144; *see also, e.g.*, Ex. 1005, 8:44-53, 22:8-11, 22:28-37, 23:60-24:3, FIGS. 2, 9; Ex. 1012, ¶¶0059, 0061; Ex. 1013, ¶¶0023-0024; Ex. 1014, FIGS. 10-11; Ex. 1033, ¶0062; Ex. 1034, ¶0097.)

Because the third communication would have been received during the normal power transfer stage, it is "based on the second protocol," which, as discussed above in Section IX.A.1(i), is the communication method used for normal power transmission that is determined based on the communication condition received during the setup stage, which may include the frequencies used to encode the data sent from the power transmitter to the power receiver. (§IX.A.1.i; Ex. 1005, 8:58-62, 10:6-27, 11:56-61, 16:30-36, 24:17-23, FIG. 10A; Ex. 1002, ¶145.)

Thus, for reasons explained here, and above, a POSITA would have been motivated, and found obvious, to configure the "microcontroller" (§IX.A.1.e) in the *Sogabe-Azancot* device/system to be configured for "receiving, using the receiver circuit (circuit 59/60 (§IX.A.1.d)), a frequency-modulated third communication from the inductive charger (power transmission device 10 (§IX.A.1.g)) like that claimed. (Ex. 1002, ¶146; §§IX.A.1.i-k.)

A POSITA would have had the skills and rationale in light of the teachings/suggestions of *Sogabe*, *Azancot*, in context of a person of ordinary skill in the art's state of art knowledge, to implement the above-modification while considering design tradeoffs and techniques/technologies with a reasonable expectation of success, especially given such modification would have involved known technologies/techniques foreseeably resulting in an electronic device having a microcontroller configured to operate in a "second mode of operation" (§IX.A.1.i) to receive, using the receiver circuit (§IX.A.1.d), a frequency-modulated third communication from the inductive charger based on the second protocol, consistent with the teachings and suggestions of *Sogabe* and *Azancot.* (*See* §§IX.A.1.a-k; Ex. 1002, ¶147.)

m) wherein the first mode of operation is associated with a first power level and the second mode of operation is associated with a second power level, and

n) wherein the first power level and the second power level are different.

The *Sogabe-Azancot* combination discloses and/or suggests these limitations. (Ex. 1002, ¶¶148-149.) As discussed above for limitations 15(f) and 15(i), the first mode of operation corresponds to the setup stage, whereas the second mode of operation is the normal transmission mode or a combination of the setup stage and the normal transmission mode as performed in the modified *Sogabe-Azancot* device/system. (§§IX.A.1.f, IX.A.1.i; *see also* §§IX.A.1.a-l.) The setup stage ("first

mode of operation") is associated with a "low power" level, whereas during normal power transmission, power is transmitted at the level corresponding to the power receiving device. (Ex. 1005, 11:56-12:13, 14:36-51, 16:14-29, 17:18-47, FIGS. 3A, 5A; Ex. 1002, ¶148.) Therefore, the first mode of operation is associated with the "low power" level ("first power level") corresponding to setup, whereas the second mode of operation is associated at least with the power level for normal power transmission appropriate for the power receiving device ("second power level"). Thus, the *Sogabe-Azancot* combination discloses/suggests limitation 15(m). (*Id.*)

The *Sogabe-Azancot* combination discloses and/or suggests limitation 15(n) for the reasons discussed above, where the "low power" level and the power level during normal power transmission are different. (Ex. 1002, ¶149.)

2. Claim 20

a) The electronic device of claim 15, wherein the microcontroller is further configured for detecting the presence of a foreign object between the inductive charger and the inductive charging receiver of the electronic device during operation by either reporting one of output power or voltage or by reporting a fault condition to the inductive charger to terminate charging.

Sogabe in view of *Azancot* discloses and/or suggests this limitation. (Ex. 1002, ¶¶150-158.)

Per the claim 15 combination, the *Sogabe* device/system would have been modified in view of *Azancot* such that controller 52 is implemented using a

microcontroller similar to that disclosed/suggested by *Azancot.* (§IX.A.1.e.) Consistent with the teachings of *Sogabe*, the microcontroller of the *Sogabe-Azancot* device/system would have thus been configured to control power receiving device 40, including data transmission of the power receiving device through load modulation, etc. (*Id.*; Ex. 1005, 8:44-53, 22:8-11, 7:50-55, 23:10-26; Ex. 1002, ¶151.) As configured, the microcontroller of the electronic device would control the power transmission device 40 to, for example, terminate charging. (Ex. 1005, FIG. 12, S70, 26:44-58; §§IX.A.1.e; Ex. 1002, ¶151.)

Sogabe further discloses that the power transmission device 10 is configured to "detect[] whether or not a foreign object is inserted between the primary coil L1 and the secondary coil L2" and cut off power if a foreign object is detected. (Ex. 1005, 15:11-18, 7:34-45; §IX.A.1.e; Ex. 1002, ¶152.) That is, the power transmission side can stop power transmission when a foreign object is detected between PTD10 and the secondary coil L2 of the "**inductive charging receiver**" (comprising, for example, secondary coil L2, power receiving section 42, etc.) of PRD40. (Ex. 1005, 8:23-36, 15:11-18, 7:34-35, 23:6-9, 25:26-29, 26:34-43, FIGS. 2, 9; §§IX.A.1.b, e; Ex. 1002, ¶152.)

Although *Sogabe* discloses that the wireless power device/system can detect foreign objects, it does not explicitly disclose that the microcontroller of the electronic device can detect that a foreign object is between the transmitter and

receiver by reporting output power, etc. to the transmission side as claimed. (Ex. 1002, ¶153.) Thus, *Sogabe* does not explicitly disclose that the "**microcontroller is further configured for detecting the presence of a foreign object between the inductive charger and the inductive charging receiver of the electronic device during operation by either reporting one of output power or voltage or by reporting a fault condition to the inductive charger to terminate charging**." However, a POSITA would have been motivated, and found obvious to implement such features in the *Sogabe-Azancot* device/system in view of *Azancot*, which discloses how an electronic device can detect that a foreign object is between a wireless power transmitter and a receiver of the electronic device by reporting output power, etc. to the transmission side. (Ex. 1002, ¶153; Ex. 1006, FIG. 7.)

Namely, *Azancot* discloses an electronic device that is "**configured for detecting the presence of a foreign object between [an] inductive charger and [an] inductive charging receiver of [an] electronic device during operation**."[11]

---

[11] Claim 20 recites that the microcontroller of the electronic device is "configured for" detecting the claimed foreign object "by…reporting" information to the inductive charger. (Ex. 1001, 72:49-55 (claim 20); Ex. 1002, ¶153.) That is, the claim does not specify that the microcontroller of the electronic device analyzes

(Ex. 1002, ¶154.) For instance, *Azancot* discloses a device/system for detecting when a "conductive sheet of metallic foil 5800" ("foreign object") hazard "is introduced between [a] primary coil 5220" of an inductive charger "and the secondary coil 5260" of an inductive charging receiver of an electrical device 5290 ("electronic device"). (Ex. 1006, 13:38-58, 14:58-15:3, 13:54-58, FIG. 6b; §IX.A.1.e.) Electrical device 5290, upon detecting the hazard, "displays a warning 5294 on its visual display 5296" ("Attention!!") "or emits a warning sound," as illustrated in the below figure. (Ex. 1006, 15:22-33, FIG. 6b; Ex. 1002, ¶154.)

---

power output, etc. because the inductive charger processes power output, etc. information that is received from the electronic device to determine when to terminate charging. (Ex. 1001, 72:49-55 (claim 20).) Regardless, *Azancot* discloses more than what is recited by claim 20, as explained in the following analysis, because its electrical device reports power output, etc. to terminate charging as claimed and even presents a warning to users when it detects a foreign object hazard. (Ex. 1006, 13:65-14:3, 14:48-57, 15:6-11, 15:44-60, FIGS. 6b, 7; Ex. 1002, ¶154.)

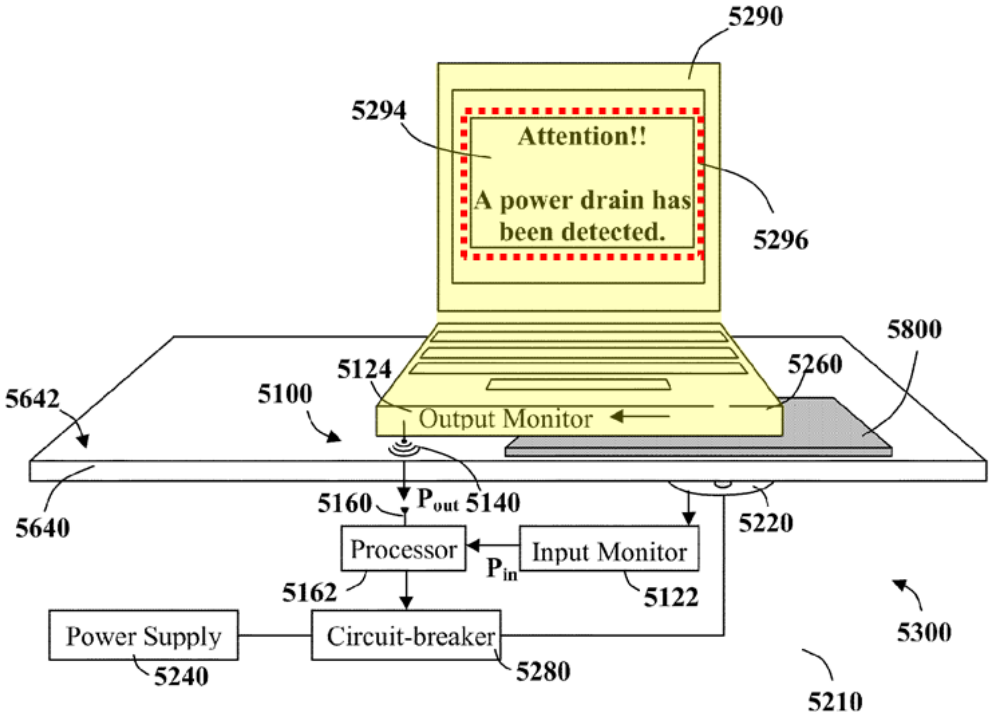

Fig. 6b

(*Id.*, FIG. 6b (annotated).)

Azancot further discloses that electrical device 5290 detects the presence of the foreign object "**by either reporting one of output power or voltage or by reporting a fault condition to [an] inductive charger to terminate charging**." (Ex. 1002, ¶155.) For instance, *Azancot* discloses that a processor 5160 receives a P_{OUT} value from an output monitor 5124 of electronic device 5290 ("**reporting…output power**") and a measured input power P_{IN} from input monitor 5122. (Ex. 1006, 13:65-14:3, 14:48-57, 15:6-11, 15:44-60, FIGS. 5, 6b; §IX.A.1.e.) When an efficiency differential Δ (which is "the difference between P_{OUT} and P_{IN}") is above a threshold, efficiency monitor 5300 detects that the conductive sheet 5800

hazard is between the wireless power base system and the electronic device 5290 and the charging side disconnects the primary coil from the power supply to prevent power leakage and accordingly terminates charging. (Ex. 1006, 13:27-29, 13:65-14:3, 14:48-57, 15:6-11, 15:44-60, FIGS. 6b, 7.) As explained previously, electrical device 5290, upon detecting the hazard by reporting the P_{OUT} value, "displays a warning 5294 on its visual display 5296" ("Attention!!"). (Ex. 1006, 15:22-33, FIG. 6b; Ex. 1002, ¶155.)

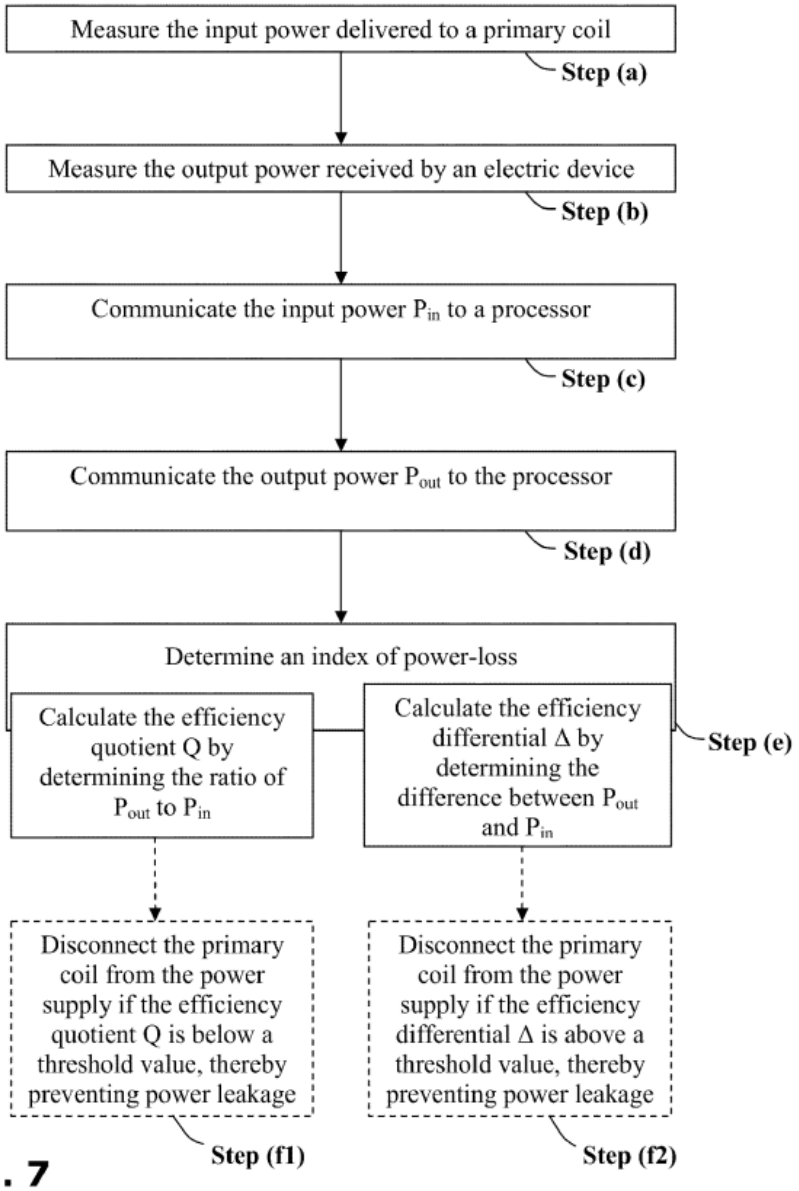

Fig. 7

(*Id.*, FIG. 7.)

In light of such teachings/suggestions, and further to the reasons explained for claim 15 (regarding modifications to *Sogabe*'s device/system in view of *Azancot* (§IX.A.1)), a POSITA would have been motivated and found obvious to configure

the "microcontroller" in the *Sogabe-Azancot* device/system to provide similar functionalities. (Ex. 1002, ¶156.) Indeed, given that the microcontroller of the *Sogabe-Azancot* device/system would have been configured to control power receiving device 40 and transmits data to control the power transmitter, as explained above (Ex. 1005, 8:44-53, 22:8-11, FIG. 12, S70, 26:44-58; Ex. 1006, 10:20-21, 7:21-30, 3:6-23, 10:4-19, 13:10-29, 15:34-60, FIG. 5, 7; §§IX.A.1.e-f; Ex. 1002, ¶156), and in light of the foreign object detection disclosures/guidance of *Azancot* (discussed above), a POSITA would have found it obvious to further configure the "microcontroller" for detecting the presence of a foreign object between the inductive charger (power transmission device 10) and the inductive charging receiver of the electronic device during operation by either reporting one of output power or voltage or by reporting a fault condition to the inductive charger to terminate charging, like that claimed. (*Id.*; Ex. 1002, ¶156.) Indeed, a POSITA would have recognized that there was a known problem with foreign objects interfering with wireless power systems, that *Azancot*'s teachings addressed such issues, and that combining the teachings of *Sogabe* and *Azancot* was within the skill/capability of an ordinary artisan, and thus obvious. *See Intel Corp. v. PACT XPP Schweiz AG*, 61 F.4th 1373, 1381 (Fed. Cir. 2023).

A POSITA would have been motivated to modify the *Sogabe* device/system in view of the above-discussed *Azancot* power difference control features to

efficiently prevent power leakage in the modified *Sogabe* device. (Ex. 1006, 2:53-58, 15:44-61; Ex. 1002, ¶157.) A POSITA also would have appreciated that further modifying the *Sogabe* device/system in view of *Azancot*'s hazard detection teachings as described would have improved the modified *Sogabe* device/system (§IX.A.1) by minimizing/eliminating a need to vary the load on the power receiving side during a periodic authentication state to detect a foreign object. (Ex. 1006, 2:53-58, 15:44-61; Ex. 1005, 29:14-30; Ex. 1002, ¶157.) Moreover, a POSITA would have also appreciated that configuring the microcontroller to provide features similar to *Azancot*'s efficiency differential threshold functionalities would have increased the efficiency and usability of the modified *Sogabe* device/system by enabling it to recognize that not all improper or low load conditions would necessitate turning off power flow. (Ex. 1006, 2:53-58, 15:44-61; Ex. 1002, ¶157.)

A POSITA would have had a reasonable expectation of success in implementing such a differential foreign object detection system in the modified *Sogabe* device/system (§IX.A.1). (Ex. 1002, ¶158.) For instance, *Sogabe* recognizes problems with foreign objects being placed between a power transmitter and an electronic device and using a microcontroller to control wireless power flow, transmit control data, etc. (Ex. 1005, 15:11-18, 8:44-53, 23:8-11; §§IX.A.1.e-f), and *Azancot* discloses a beneficial system for detecting hazards based on a difference between a measured input power and a received output power as previously

discussed. (Ex. 1002, ¶158.) The modification would have been a predictable combination of known components according to known methods (*e.g.*, input and output power based hazard detection), and would have produced the predictable result of the microcontroller in the modified device/system being further configured for detecting the presence of a foreign object between the inductive charger and the inductive charging receiver of the electronic device during operation by either reporting one of output power or voltage or by reporting a fault condition to the inductive charger to terminate charging as claimed and consistent with the teachings of *Sogabe-Azancot*. (Ex. 1002, ¶158.) *See KSR*, 550 U.S. at 416.

3. Claim 21

a) The electronic device of claim 15, wherein one of the first mode of operation and the second mode of operation is a proprietary mode of operation.

Sogabe in view of *Azancot* discloses and/or suggests this limitation for at least two reasons. (Ex. 1002, ¶159.) First, *Sogabe*'s normal power transmission mode and setup power transmission mode, which may be the first or second modes of operation, are uniquely provided to increase compatibility with other contactless power systems as proprietary power modes. (§§IX.A.1.f, i; Ex. 1005, 30:5-32:57, FIGS. 3A-5C, 11-12; Ex. 1002, ¶159.) Second, *Sogabe*'s first and/or second modes of operation did not comprise then-standard modes of operation as proprietary modes of operation. (§§IX.A.1.f, i; Ex. 1005, FIGS. 3A-5C, 11-12; Ex. 1002, ¶159.)

For this, *Sogabe*'s disclosures are consistent with those of the '777 patent and the state of the art, which disclose that a "proprietary" mode of operation may include a mode that did not make use of then-standard modes of operation. (Ex. 1001, 56:55-60 (distinguishing Bluetooth and other standard protocols from "proprietary" protocols); *see, e.g.*, Ex. 1007, 4:18-25 (distinguishing "proprietary" protocols from then-standard protocols such as Bluetooth).) As such, for similar reasons here and above, the *Sogabe-Azancot* device/system would have provided similar features. (Ex. 1002, ¶159; §IX.A.1.)

4. Claim 23

a) The electronic device of claim 15, wherein the received power is within a first frequency range for the first mode of operation and within a second frequency range for the second mode of operation.

The *Sogabe-Azancot* combination discloses and/or suggests this limitation. (Ex. 1002, ¶160.) As an initial matter, claim 23 does not appear to further limit claim 15 as it does not place any boundaries on the first and second frequency ranges (*e.g.*, lower or upper bound, whether they overlap, etc.), and, therefore the received power in each mode of operation is within a respective frequency range in every scenario. Regardless, as discussed above for limitations 15(f) and 15(i), the first mode of operation corresponds to the setup stage, whereas the second mode of operation is the normal transmission mode or a combination of the setup stage and the normal transmission mode. (§§IX.A.1.f, IX.A.1.i.) The setup stage ("first mode of

operation") uses an initial "f01" or "f02" operating frequency for the transfer of power to the electronic device, whereas during normal power transmission, the operating frequency for the transfer of power is an "f1" or "f2" frequency. (Ex. 1005, 10:18-27, 14:41-67, 15:34-50, 21:7-12, 23:60-24:3, FIG. 10A; Ex. 1002, ¶160.) Therefore, the received power in the first mode of operation in the *Sogabe-Azancot* device/system has a frequency f01 and/or f02, where f01 and f02 are "within a first frequency range" (the lower bound of the range is a frequency less or equal to both f01 and f02, and the upper bound is a frequency greater than or equal to both of f01 and f02). (Ex. 1002, ¶160; §IX.A.1.) The received power in the second mode of operation has a frequency f1 and/or f2, where f1 and f2 are "within a second frequency range" (the lower bound of the range is a frequency less or equal to both f1 and f2, and the upper bound is a frequency greater than or equal to both of f1 and f2). (*Id.*) Accordingly, for reasons explained for claim 15 and above, the *Sogabe-Azancot* combination discloses/suggests the limitations of claim 23. (*Id.*)

B. Ground 2: Claims 17 and 21 are obvious over *Sogabe* in view of *Azancot* and *Walley*

1. Claim 17

a) The electronic device of claim 15, wherein the communication transmitter circuit and the communication receiver circuit in the electronic device are configured to communicate with different types of inductive chargers based on communications exchanged with different types of inductive chargers.

The *Sogabe-Azancot* combination in view of *Walley* discloses and/or suggests this limitation. (Ex. 1002, ¶¶161-167.) *Sogabe* discloses that the power transmission side can communicate with "various types of power receiving devices" using different "communication condition[s]" to charge various devices via contactless power transmission. (Ex. 1005, 9:15-31; *see also id.*, 10:39-11:16, FIGS. 1, 2, 9.) A communication condition may specify a modulating power output frequency (*e.g.*, f1, f2) used for communication using frequency modulation or may specify thresholds used for communication using load modulation to use when charging and communicating with a power receiving device, as appropriate for a given type of receiver. (*Id.*, 9:38-61, 13:41-51, 15:32-50, 16:14-29; *see also id.*, 10:39-11:16, FIGS. 1, 2, 9, 12; Ex. 1002, ¶161.)

Focusing on the compatibility and interoperability features of the power transmission side, *Sogabe* does not explicitly disclose that the power receiving side includes an electronic device that is similarly compatible with various types of wireless power transmission devices. (*See generally* Ex. 1005.) That is, *Sogabe* does not explicitly disclose that the "**communication transmitter circuit and the communication receiver circuit in the electronic device are configured to communicate with different types of inductive chargers based on communications exchanged with different types of inductive chargers**." (Ex. 1002, ¶162.) As explained below, however, and when considering the state of the

art, a POSITA would have been motivated and found obvious to modify the *Sogabe-Azancot* device/system to implement such features in view of *Walley*, which discloses features relating to universal wireless power receivers that are compatible with various types of chargers. (Ex. 1002, ¶162; Ex. 1007, FIG. 1.)

Before the alleged time of invention, POSITAs were mindful of interoperability issues for wireless power devices. (Ex. 1002, ¶163; Ex. 1007, 1:56-67 ("While…organization[s] are attempting to establish standards regarding the control channel protocol, currently, vendors are free to use whatever protocol they chose, making compatibility issues between different vendors' wireless power products."); Ex. 1037, 1:51-54 ("[A] need exists for a chargeable device configured to detect one or more wireless chargers and, thereafter, determine an optimal charging solution for receiving a charge.").) Accordingly, wireless power receiving devices were designed with compatibility and flexibility in mind. (Ex. 1002, ¶163; Ex. 1035, 19:3-20, 21:7-18, FIGS. 10-11; Ex. 1037, FIG. 10, 11:55-13:14.)

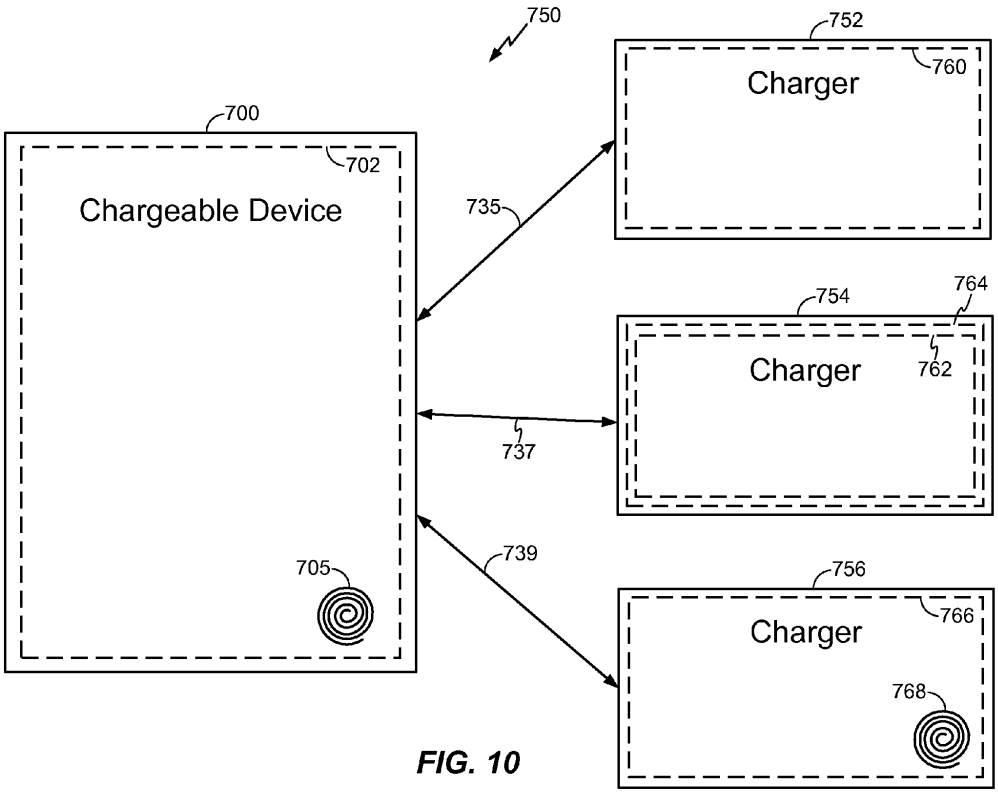

FIG. 10

(Ex. 1037, FIG. 10 (illustrating a chargeable device 700 that is compatible with different types of chargers 752, 754, and 756).)

Walley, as one such effort relating to reducing compatibility issues for wireless power receiving devices, discloses wireless power receivers that are compatible with a variety of wireless power transmitters. (Ex. 1002, ¶164; Ex. 1007, FIG. 1.) Specifically, *Walley*, similar to *Sogabe* (§§IX.A.1.a, c-d) and *Azancot*, discloses devices 12 and 14, which receive wireless power to charge a battery from a wireless power transmit unit 10. (Ex. 1007, 3:34-44, 7:5-13, FIG. 1; Ex. 1002, ¶164.) As shown in annotated Figure 1 below, each device includes a wireless power (WP) transceiver comprising a respective "transmitter section" and a "receiver

section" and corresponding hardware ("**communication transmitter circuit and**" "**communication receiver circuit in [an] electronic device**"). (Ex. 1007, 4:42-5:44, FIG. 1; Ex. 1002, ¶164.)

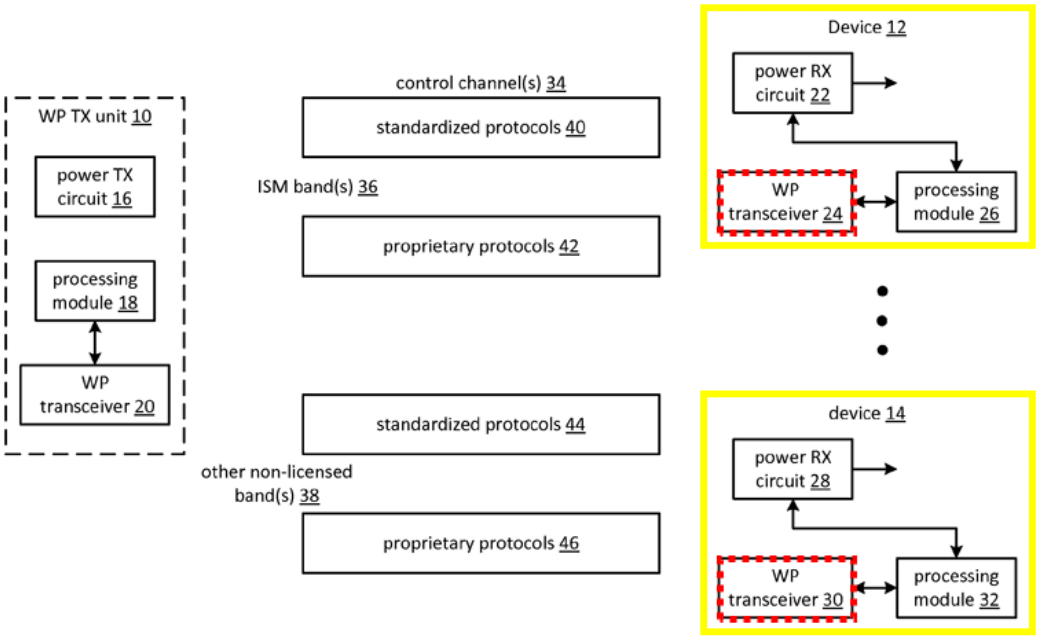

FIG. 1

(Ex. 1007, FIG. 1 (annotated).)

Walley further discloses that the wireless power receiving device transceivers are **"configured to communicate with different types of inductive chargers based on communications exchanged with different types of inductive chargers**." (Ex. 1002, ¶165.) For instance, *Walley* discloses that "the receive unit…functions to identify [a] control channel protocol used by the wireless power transmit unit" because wireless power transmit units may use different control channel protocols for control channel communications ("**different types of**

inductive chargers"). (Ex. 1007, 6:6-21.) The receive unit, using its "transmitter" and "receiver section[s]," may identify a control channel protocol used by a transmit unit by receiving set-up communications from transmit units, exchanging/transceiving protocol negotiation information with transmit units, etc. (*Id.*, 4:42-5:44, 5:60-6:60, FIG. 1.) After identifying what protocol a given wireless power transmitter uses, the receive unit configures its transceiver "to implement one or more…standard communication protocols and/or one or more…proprietary communication protocols" that is/are used by a specific/unique type of transmit unit and can communicate/exchange various wireless power control information with the transmit unit. (Ex. 1007, 4:42-5:44, 5:60-6:60, 9:59-10:22, FIGS. 1, 6.) In this way, a "**communication transmitter circuit and**" a "**communication receiver circuit in the electronic device are configured to communicate with different types of inductive chargers based on communications exchanged with different types of inductive chargers**." (Ex. 1002, ¶165.)

In view of *Walley*, and consistent with the state of the art, it would have been obvious to a POSITA to configure the communication transmitter circuit and the communication receiver circuit in the electronic device of the *Sogabe-Azancot* device/system to communicate with different types of inductive chargers based on communications exchanged with different types of inductive chargers. (Ex. 1002, ¶166.) A POSITA would have been motivated to do so as it would have increased

the utility of the electronic device and would have allowed the electronic device to be charged by chargers in other known wireless charging systems using understood standard and proprietary protocols. (Ex. 1007, 1:54-2:15, 3:47-55, 4:15-25, FIG. 1; Ex. 1002, ¶166.) Furthermore, and as explained previously, such a modification would have increased wireless power receiving device compatibility/interoperability, which was a well-understood and desired feature before the alleged time of invention. (Ex. 1007, 1:54-2:15, 3:47-55, 4:15-25, FIG. 1; Ex. 1035, 19:3-20, 21:7-18, FIGS. 10-11; Ex. 1037, 1:51-54 FIG. 10, 11:55-13:14; Ex. 1002, ¶166.)

Such a modification would have been a predictable combination of known components according to known methods (*e.g.*, wireless power receivers/electronic devices that are compatible with various protocols and transmit units), and would have produced the predictable result of the communication transmitter circuit and the communication receiver circuit in the electronic device being configured to communicate with different types of inductive chargers based on communications exchanged with different types of inductive chargers. (Ex. 1002, ¶167.) *See KSR*, 550 U.S. at 416.

Moreover, a POSITA would have had the skills and rationale in light of the teachings/suggestions of *Sogabe*, *Azancot*, and *Walley*, in context of state-of-art knowledge, to implement such features while considering design tradeoffs and

techniques/technologies with a reasonable expectation of success, especially given such modification would have involved known technologies/techniques (*e.g.*, wireless power receivers/electronic devices that are compatible with various protocols and transmit units), foreseeably resulting in an electronic device having a communication transmitter circuit and a communication receiver circuit configured to communicate with different types of inductive chargers based on communications exchanged with different types of inductive chargers, consistent with the teachings and suggestions of *Sogabe-Azancot-Walley.* (Ex. 1002, ¶167.)

2. Claim 21

a) The electronic device of claim 15, wherein one of the first mode of operation and the second mode of operation is a proprietary mode of operation.

To the extent the *Sogabe-Azancot* combination does not disclose and/or suggest claim 21 (it does (§IX.A.3)), this feature would have been obvious in view of *Walley.* (Ex. 1002, ¶¶168-171.) *Walley*, similar to *Sogabe* and *Azancot*, discloses using a "microprocessor" or "micro-controller" to control a wireless power transmitter or receiver device (device 12 or 14) that is capable of operating using different protocols, including "proprietary" protocols, comprising various bi-directional messaging standards. (§IX.A.1.e; Ex. 1007, 3:47-55, 4:15-55, FIG. 1.)

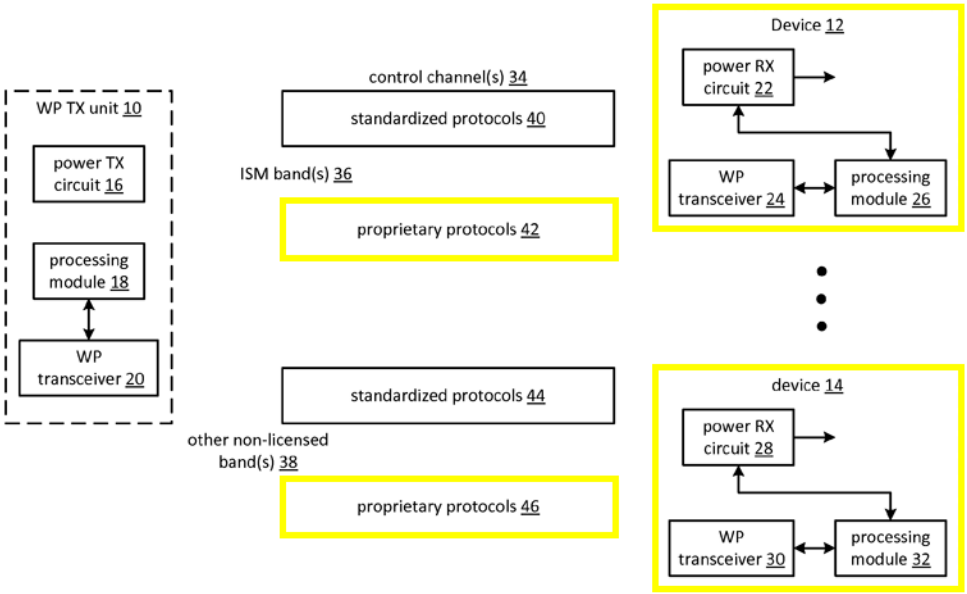

FIG. 1

(*Id.*, FIG. 1 (annotated).) (Ex. 1002, ¶¶169-170.)

In light of such teachings, a POSITA would have been motivated and found obvious to configure the *Sogabe-Azancot* device/system such that the second mode of operation (§IX.A.1.i) comprises one proprietary protocol in order to increase the interoperability and universal features of the *Sogabe-Azancot* device/system to better work with other known wireless charging systems using understood/known proprietary protocols. (Ex. 1007, 1:54-2:15, 3:47-55, 4:15-25, FIG. 1; Ex. 1002, ¶171.) As explained previously, such a modification would have increased device compatibility, which was a well-understood and desired feature before the alleged time of invention. (§IX.B.1.) Moreover, such a modification would have been a predictable combination of known components according to known methods (*e.g.*, wireless power receivers/electronic devices that are compatible with various

proprietary protocols), and would have produced the predictable result of one of the first mode of operation and the second mode of operation being a proprietary mode of operation. (Ex. 1002, ¶171.) *See KSR*, 550 U.S. at 416.

C. Ground 3: Claim 22 is obvious over *Sogabe* in view of *Azancot* and *Baarman*

1. Claim 22

a) The electronic device of claim 15, wherein the microcontroller is further configured for receiving a ping from an inductive charger and sending, in response to the ping, a responsive communication identifying one of the first mode of operation and the second mode of operation.

The *Sogabe-Azancot* combination in view of *Baarman* discloses and/or suggests this limitation. (Ex. 1002, ¶¶172-181; *see also* §IX.A.1.) As discussed above, *Sogabe* in view of *Azancot* discloses and/or suggests an electronic device operating in a setup power transmission mode and a normal power transmission mode, which correspond to first and second power modes. (§§IX.A.1.f, i.)

Although *Sogabe* (including as modified with *Azancot*) does not explicitly disclose that the microcontroller of the electronic device receives a ping from the power transmission device and sends, in response to the ping, a responsive communication identifying one of the first mode of operation and the second mode of operation, it would have been obvious to a POSITA to implement such features in view of *Baarman*. (Ex. 1002, ¶173.)

Similar to *Sogabe* and *Azancot*, *Baarman* discloses a "wireless charging system." (Ex. 1008, Title, Abstract, FIG. 1, ¶0030.) *Baarman*'s device/system comprises an inductive power supply 12 ("**inductive charger**"), which includes a controller 32 and a tank circuit 34 that includes primary coil 16, that transmits wireless power to charge remote control 14 ("**electronic device**"), which comprises a controller 80. (*Id.*, ¶¶0030, 0032, 0038, FIGS. 1-2A, 3B.)

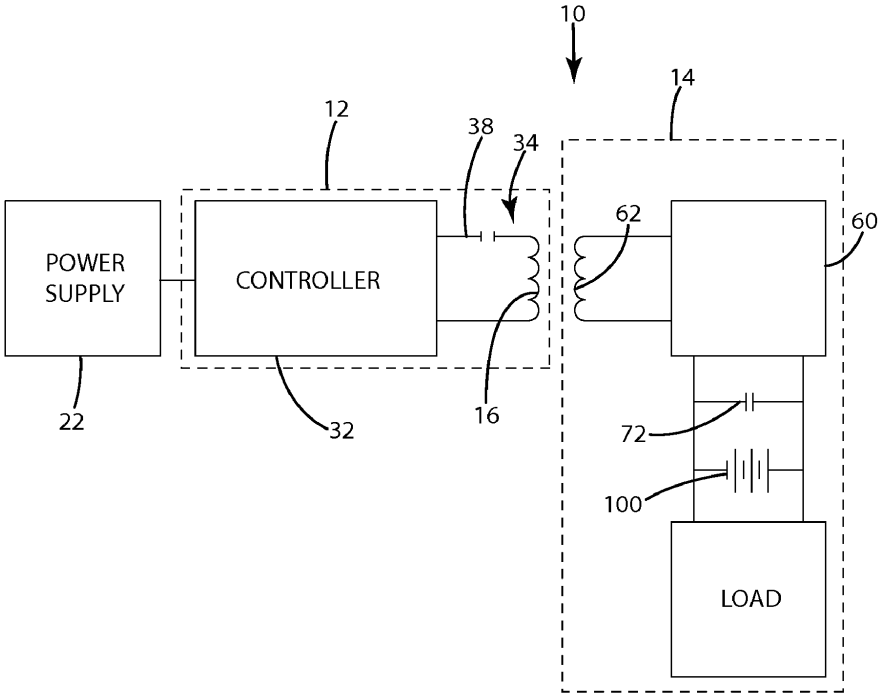

(*Id.*, FIG. 1.) Controller 32 may be a dsPIC30F2023 or similar microcontroller; controller 80 may be an ATTINY44V-10MU or similar microcontroller ("**microcontroller**"). (*Id.*, FIG. 2A, 3B; Ex. 1002, ¶174.)

Baarman discloses "**wherein the microcontroller is further configured for receiving a ping from an inductive charger**." (Ex. 1002, ¶175.) For instance,

Baarman discloses "the inductive power supply enters a ping state 202 by periodically applying a relatively small amount of power to the tank circuit 34. The amount of power in each ping is typically sufficient to enable a remote control 14 with a depleted battery 100 to generate a feedback signal to identify its presence within the electromagnetic field." (Ex. 1008, ¶0048, FIG. 4.) The controller 80 receives the ping because the ping is used to power the microcontroller to generate a feedback signal. (*Id.*, ¶¶0032, 0039, 0048, 0055, FIGS. 1, 2A, 2C, 3A, 3B; Ex. 1002, ¶175.) The microcontroller also receives the ping through monitoring the current and voltage of the ping when the primary side controls tank circuit 34 to output the power ping. (Ex. 1008, ¶¶0032, 0039, 0048, FIGS. 1, 2A, 2C, 3A, 3B; Ex. 1002, ¶175.)

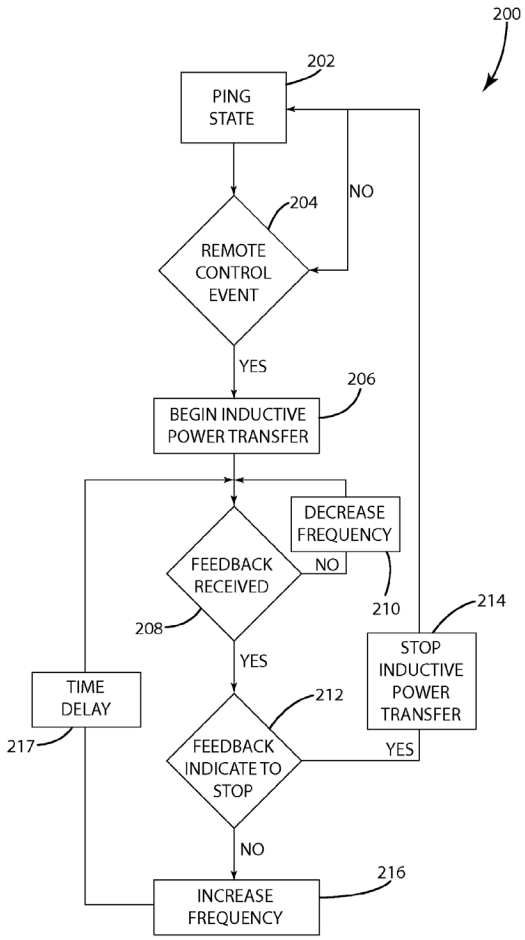

Fig. 4

(Ex. 1008, FIG. 4.)

Baarman further discloses "**sending, in response to the ping, a responsive communication**." (Ex. 1002, ¶176.) For instance, *Baarman* discloses "[t]he amount of power in each ping is typically sufficient to enable a remote control 14 with a depleted battery 100 to generate a feedback signal" and that a "feedback signal [is] generated by the remote control 14 in response to the ping" ("**sending, in response to the ping, a responsive communication**"). (Ex. 1008, ¶¶0048-0049.) Controller

80 sends the feedback signal by "selectively open[ing] and clos[ing] FET 96 to create a data stream." (*Id.*, ¶0055, FIGS. 3A, 3B.)

The *Baarman* feedback signal, which is sent in response to a ping, is "**a responsive communication identifying one of the first mode of operation and the second mode of operation**." (Ex. 1002, ¶177.) Prior to beginning a normal power mode, the *Baarman* device/system enters the pinging process wherein a "small amount of power" is transmitted to power remote control 14. (Ex. 1008, ¶0048.) And when a feedback signal is received by the inductive power supply 12, it "begins inductive power transfer" via normal operation. (*Id.*, ¶0049) *Baarman* further discloses that the feedback signal includes normal power mode operation parameters, including a power output frequency and a "period" of time for controlling wireless power during a normal mode of operation following a pinging process. (*Id.* ¶¶0049-0050; Ex. 1002, ¶177.) The feedback signal thus identifies a normal power transmission mode ("**a responsive communication identifying one of the first mode of operation and the second mode of operation**"). (Ex. 1008, ¶¶0048-50, FIGS. 1, 4; Ex. 1002, ¶177.)

The *Baarman* pinging and feedback signal configuration to identify a normal mode of operation is consistent with the disclosure of the '777 patent. (Ex. 1002, ¶178.) The '777 patent does not provide any specific example or explanation regarding the claim 22 limitation for sending, in response to a ping, a responsive

communication identifying one of a first mode of operation and a second mode of operation as recited in claim 22. (*See generally* Ex. 1001.) Instead, the '777 patent generally discloses that a "charger can periodically start and apply a ping voltage 200 of pre-determined frequency and length to the charger coil….The receiver is then activated, and may begin to send back communication signals….In response to the receiver providing information regarding output power or voltage, etc. the charger can modify voltage, frequency, duty cycle of the charger coil signal or a combination of the above." (*Id.*, 20:25-61.) *Baarman*, which uses a feedback signal that identifies a normal mode of operation, similarly discloses a receiver that wakes up in response to a ping and sends back signals for a charger to modify a voltage, frequency, etc. output, consistent with what is disclosed by the '777 patent. (Ex. 1008, ¶¶0048-50, FIGS. 1, 4; Ex. 1002, ¶178.)

Given that the *Sogabe* device/system as modified by *Azancot* discloses operating in a setup power transmission mode and a normal power transmission mode (which correspond to first and second power modes) and that *Baarman* discloses responding to a ping with a communication identifying a normal mode of operation, a POSITA would have been motivated and found obvious to configure the microcontroller of the *Sogabe* device/system (as modified by *Azancot*) for receiving a ping from an inductive charger and sending, in response to the ping, a responsive communication identifying one of the first mode of operation and the

second mode of operation. (Ex. 1002, ¶179.) In combination, the microcontroller of the electronic device of the *Sogabe-Azancot* device/system (§IX.A.1.e) would have been configured to transmit a feedback signal similar to that of *Baarman*, which identifies the normal mode of operation in response to a ping, such that a setup power transmission mode would not be needed to negotiate operating power, etc. (Ex. 1008, ¶¶0048-50, FIGS. 1, 4; Ex. 1005, FIGS. 2-5C, 9; Ex. 1002, ¶179.)

A POSITA would have had good reason to implement such ping and responsive signaling (similar to that disclosed by *Baarman* as explained), such as to reduce the complexity of the wireless power setup process disclosed by *Sogabe* while still maintaining universal interoperability and compatibility features. (Ex. 1008, ¶¶0048-49, FIGS. 1, 4; Ex. 1005, FIGS. 2-5C, 9, 11-12 (disclosing exemplary details of the negotiation and setup process); Ex. 1002, ¶180.) Determining whether to make use of the *Sogabe* negotiation and setup processes via pinging and responsive signaling identifying a normal mode also would have decreased low power transmission time in favor of normal power transmission time and optimized charging. (Ex. 1008, ¶¶0047-49, FIGS. 1, 4; Ex. 1005, FIGS. 2-5C, 9; Ex. 1002, ¶180.) Further, using such pinging and responsive identifying communications as explained also would have reduced risks associated with powering an improper device, as the feedback signals help identify compatible devices. (Ex. 1008, ¶¶0047-49; Ex. 1005, FIGS. 3A-5C; Ex. 1002, ¶180.) Furthermore, a POSITA would have

appreciated that the pinging process also would have helped "reduce the energy consumed by the system…when a compatible remote control is not present." (Ex. 1008, ¶¶0047-48; Ex. 1005, FIGS. 3A-5C; Ex. 1002, ¶180.)

A POSITA would have had a reasonable expectation of success in having the microcontroller include pinging and responsive signaling similar to that disclosed by *Baarman* as described. (Ex. 1002, ¶181.) Indeed, using pinging and responsive signaling to identify power modes like that disclosed by *Baarman* was well-understood. (Ex. 1002, ¶181; Ex. 1010, 46-48; Ex. 1036, ¶0253, FIG. 20a-b.) Here, the modification would have been a predictable combination of known components according to known methods (*e.g.*, pinging and responsive signaling identifying a normal mode of operation to begin a normal wireless power transfer mode), and would have produced the predictable result of the microcontroller being further configured for receiving a ping from an inductive charger and sending, in response to the ping, a responsive communication identifying one of the first mode of operation and the second mode of operation. (Ex. 1002, ¶181.) *See KSR*, 550 U.S. at 416.

X. DISCRETIONARY DENIAL IS NOT APPROPRIATE

Discretionary denial under §325(d) is not appropriate here given the prior art combinations and arguments raised during prosecution are not the same or substantially similar to the grounds presented herein. The Office did not consider the disclosures of *Sogabe* alone or in light of the teachings of *Azancot*, *Walley*, and/or *Baarman*. (*See generally* Ex. 1004; Ex. 1001, Cover.) Indeed, the examiner allowed the '777 patent without any substantive analysis of any of the prior art submitted by the applicant. (Ex. 1004, 75-77.) The Office/examiner thus erred in a manner pertinent to the patentability of the challenged claims by summarily allowing the now challenged claims without considering/applying the teachings/suggestions in at least *Sogabe*, or in view of the other prior art cited herein. Indeed, *Sogabe* discloses or suggests many of the features recited in the challenged claims, and thus is relevant to the patentability of the challenged claim(s) and to obviousness when considered alone or in light of *Azancot*, *Walley*, and/or *Baarman*. (§IX.)

This is true even though *Baarman* and a patent application publication relating to *Azancot* were submitted in IDSs during prosecution of **the '369 patent** (§IV), which is a parent to the '777 patent, the same day over 300 references were submitted. (Ex. 1016, 587-616, 1079-1097.) As with other references submitted during prosecution, the examiner erred in a manner pertinent to the patentability of the challenged claims by failing to consider and apply the teachings of *Baarman* and

Azancot alone or in combination with other prior art. As demonstrated in §IX, *Baarman* and *Azancot* disclose and/or suggest features recited in challenged claim limitations, and thus should have been considered in combination with other pertinent references (like those of *Sogabe*). Thus, the examiner erred in believing at the time that no prior art teaches or suggests the combination of steps or elements in the claims without considering the collective teachings/suggestions in the art (like that discussed in §IX). Had the examiner done so, the challenged claims would likely not have issued.[12]

Further, the *Fintiv* factors do not justify denying institution. *Apple Inc. v. Fintiv, Inc*., IPR2020-00019, Paper 11 (P.T.A.B. Mar. 20, 2020) (precedential).

The **first factor** (stay) is neutral, because Samsung has not yet moved for a stay. *See Hulu LLC v. SITO Mobile R&D IP, LLC et al.*, IPR2021-00298, Paper 11 at 10-11 (P.T.A.B. May 19, 2021).

The **second factor** (proximity) is neutral. "The PTAB will weigh this factor against exercising discretion to deny institution under *Fintiv* if the median time-to-trial is around the same time or after the projected statutory deadline for the PTAB's final written decision" (FWD). (Ex. 1022, 9.) The median time from filing to trial

[12] Petitioner reserves the right to seek leave to respond to any §325(d) (and §314) arguments that PO may raise in this proceeding to avoid institution.

in the Eastern District of Texas is 19 months, meaning trial will be *no earlier* than May 2024 (Ex. 1023, 35), is consistent with the court's scheduled jury selection for August 5, 2024 (Ex. 1024, 1.) With this petition filed in June 2023, a FWD may be expected by December 2024, not long after the trial date.

That the FWD may come after the trial date is not dispositive. The Board has granted institution in cases where the FWD issued months after the scheduled trial date. The Board has relied on various justifications, such as diligence in filing the petition, a stipulation not to pursue the asserted grounds in litigation, minimal investment in litigation, and the merits of the invalidity challenge were strong. *Verizon Business Network Services, Inc. v. Huawei Techs. Co.*, IPR2020-01141, Paper 12 (Jan. 14, 2021). The same factors are present in this case. For instance, Petitioner diligently filed this petition (challenging long, convoluted claims) in advance of the one-year bar date and within four months of PO's infringement contentions in the Texas Litigation. (Exs. 1021, 1025.) Fact discovery is not anticipated to close until March 18, 2024. (Ex. 1024, 3.) Expert discovery has not yet started. (*Id.*) And the *Markman* hearing has been scheduled for February 6, 2024, after the filing of this petition. (*Id.*)

The **third factor** (investment) also weighs against denial. The district court case is in the early stages. Fact discovery is in its infancy and the parties have not

engaged in expert discovery. (Ex. 1024, 3.) The parties have not yet identified terms for construction. (*Id.*, 3-4.) Nor have there been any substantive orders in this case.

The **fourth factor** (overlap) also weighs against denial. Petitioner hereby stipulates that, if the IPR is instituted, Petitioner will not pursue the IPR grounds in the district court litigation. Thus, "[i]nstituting trial here serves overall system efficiency and integrity goals by not duplicating efforts and by resolving materially different patentability issues." *Apple, Inc. v. SEVEN Networks, LLC*, IPR2020-00156, Paper 10 at 19 (P.T.A.B. June 15, 2020); *see also Sand Revolution II, LLC v. Continental Intermodal Group-Trucking LLC*, IPR2019-01393, Paper 24 at 12 (P.T.A.B. June 16, 2020).

While the **fifth factor** (parties) may weigh slightly in favor of denial, because the Petitioner and PO are the same parties as in district court, based on a "holistic view," the factors favor institution. *Samsung Elecs. Co. Ltd. v. Dynamics Inc.*, IPR2020-00505, Paper 11 at 15 (P.T.A.B. Aug. 12, 2020).

Even if the Board determines that the above factors favor denial, the Board should not discretionarily deny institution, because this petition presents compelling merits. *See Commscope Tech. LLC v. Dali Wireless, Inc.*, IPR2022-01242, Paper 23 at 4-5 (P.T.A.B. Feb. 27, 2023) (precedential). The claimed features regarding inductive charging coils, communication transmitters/receivers, microcontrollers, and universal wireless charging efforts were well-known in the art, and in fact, are

largely concepts used in inductive power systems. (§IX) Moreover, this Petition is the ***sole*** challenge to the challenged claims before the Board—a "crucial fact" favoring institution. *Google LLC v. Uniloc 2017 LLC*, IPR2020-00115, Paper 10 at 6 (May 12, 2020).

XI. CONCLUSION

Accordingly, Petitioner requests institution of IPR for the challenged claims based on the specified grounds.

Respectfully submitted,

Dated: June 29, 2023

By: /Joseph E. Palys/
Joseph E. Palys (Reg. No. 46,508)
Counsel for Petitioner

CERTIFICATE OF COMPLIANCE

Pursuant to 37 C.F.R. § 42.24(d), the undersigned certifies that the foregoing Petition for *Inter Partes* Review of U.S. Patent No. 11,342,777 contains, as measured by the word-processing system used to prepare this paper, 13,977 words. This word count does not include the items excluded by 37 C.F.R. § 42.24 as not counting towards the word limit.

Respectfully submitted,

Dated: June 29, 2023

By: /Joseph E. Palys/
Joseph E. Palys (Reg. No. 46,508)
Counsel for Petitioner

CERTIFICATE OF SERVICE

I hereby certify that on June 29, 2023, I caused a true and correct copy of the foregoing Petition for *Inter Partes* Review of U.S. Patent No. 11,342,777 and supporting exhibits to be served via express mail on the Patent Owner at the following correspondence address of record as listed on Patent Center:

115007 – NK Patent Law
4101 Lake Boone Trail
Suite 218
Raleigh, NC 27607

By: /Joseph E. Palys/
Joseph E. Palys (Reg. No. 46,508)