US005553812A

United States Patent [19]

Gold et al.

[11] **Patent Number: 5,553,812**

[45] **Date of Patent: Sep. 10, 1996**

[54] **INERTIAL VELOCITY COMMAND SYSTEM**

[75] Inventors: **Phillip J. Gold**, Shelton; **Donald L. Fogler, Jr.**, Milford, both of Conn.; **James B. Dryfoos**, Wallingford, Pa.

[73] Assignee: **United Technologies Corporation**, Hartford, Conn.

[21] Appl. No.: **253,477**

[22] Filed: **Jun. 3, 1994**

[51] **Int. Cl.**[6] **B64C 11/34**; G05D 1/08; G05D 1/10

[52] **U.S. Cl.** ..... **244/76 R**; 244/17.13; 244/178; 244/181; 244/195; 364/434; 364/453

[58] **Field of Search** ..... 244/76 R, 17.13, 244/175, 178, 181, 182, 191, 195, 228; 364/443, 453, 432, 434

[56] **References Cited**

U.S. PATENT DOCUMENTS

3,995,144	11/1976	Johnson et al.	235/61.5 E
4,032,759	6/1977	Danik	235/150.25
4,070,674	1/1978	Buell et al.	364/453
4,106,094	8/1978	Land	364/453
4,173,784	11/1979	Heath et al.	364/453
4,232,313	11/1980	Fleishman	364/453
4,645,141	2/1987	McElreath	244/17.13
4,924,400	5/1990	Post et al.	364/433
5,001,646	3/1991	Caldwell et al.	364/434
5,008,825	4/1991	Nadkarni et al.	364/434
5,195,700	3/1993	Fogler, Jr. et al.	244/17.21
5,238,203	8/1993	Skonieczny et al.	364/434

Primary Examiner—Andres Kashnikow
Assistant Examiner—Virna Lissi Mojica
Attorney, Agent, or Firm—Michael Grillo

[57] **ABSTRACT**

A velocity command system is provided with a velocity stabilization mode wherein aircraft flight path referenced velocities are determined with respect to an inertial frame of reference, the flight path referenced velocities are held constant during pilot commanded yaw maneuvers so that the aircraft maintains a fixed inertial referenced flight path regardless of the pointing direction of the aircraft. Velocity control with respect to an inertial frame of reference is accomplished by controlling the aircraft flight path based on aircraft body referenced commanded lateral and longitudinal acceleration and based on aircraft body referenced lateral and longitudinal centrifugal acceleration. Operation in the velocity stabilization mode is provided in response to the manual activation of the velocity stabilization mode by the pilot, provided that the aircraft is already operating in the ground speed mode and the aircraft is not in a coordinated turn.

12 Claims, 5 Drawing Sheets

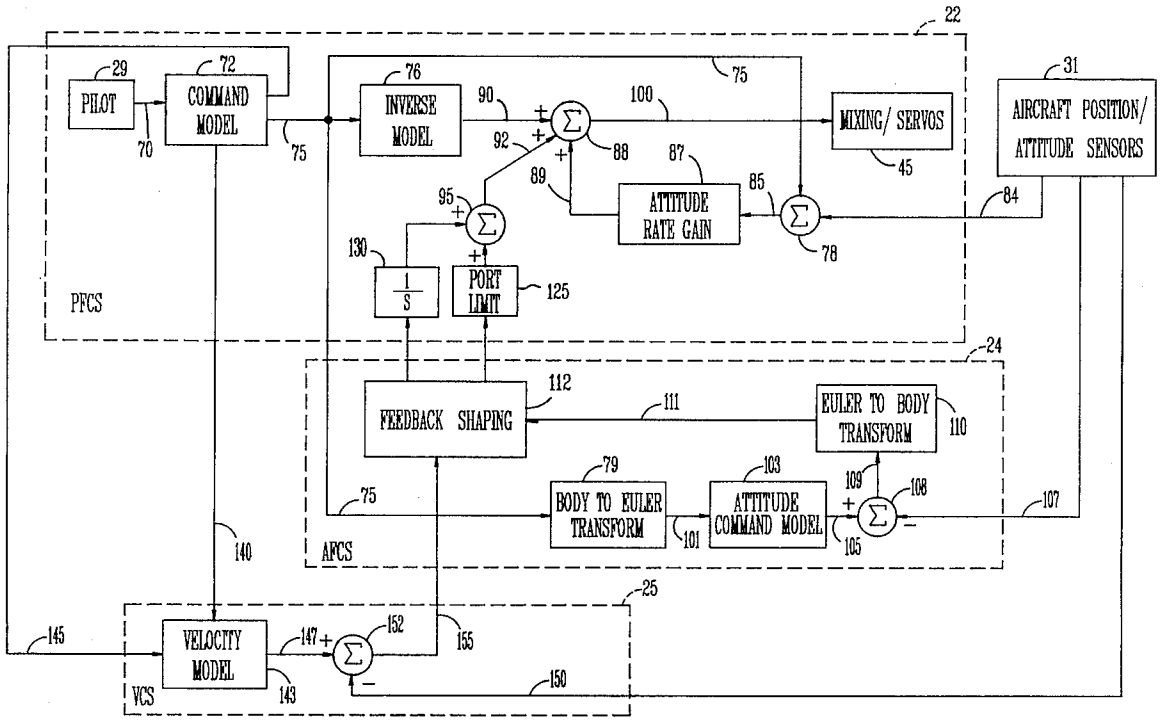

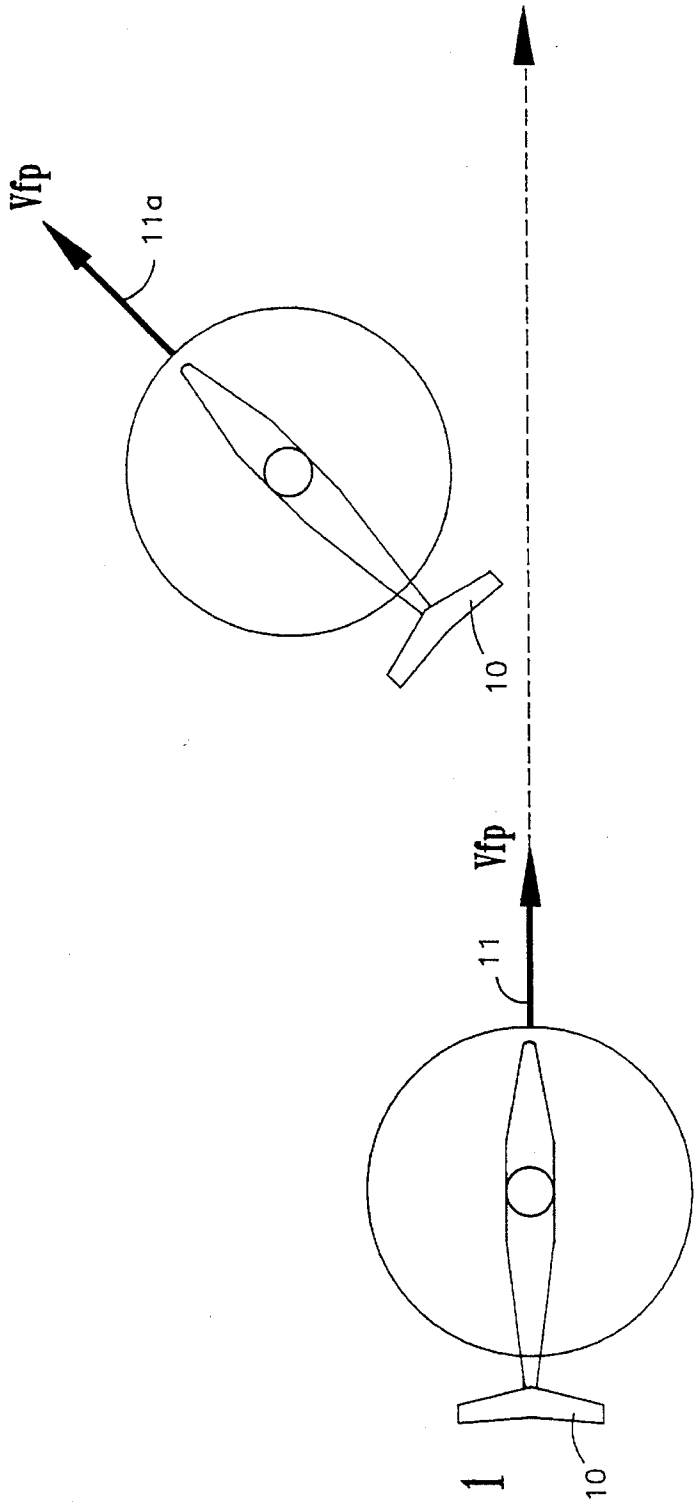

fig. 1

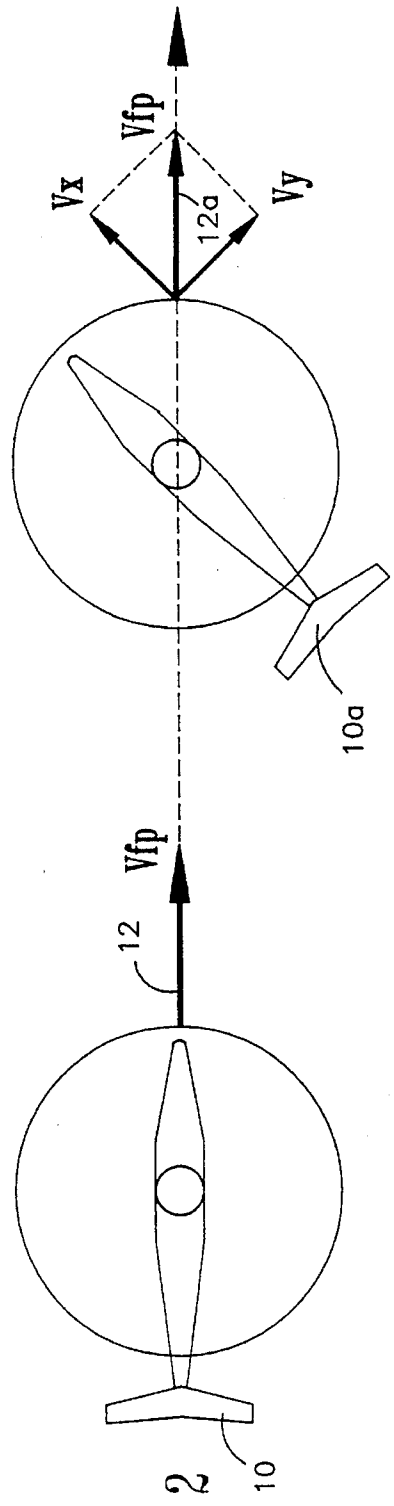

fig. 2

fig. 3

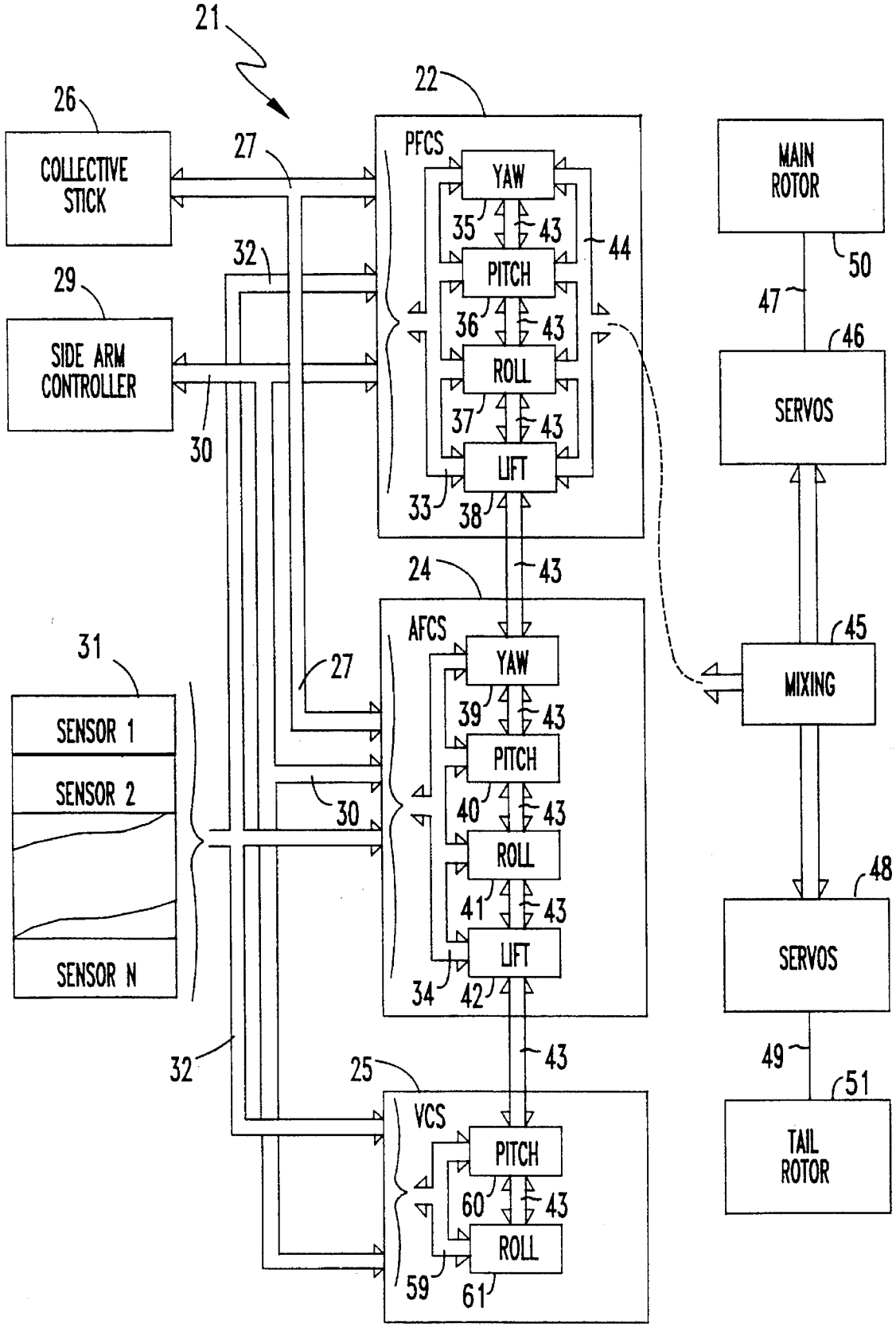
21
22
26
COLLECTIVE STICK
27
PFCS
YAW
35
43
44
PITCH
36
43
ROLL
37
43
LIFT
33
38
32
29
SIDE ARM CONTROLLER
30
MAIN ROTOR
50
47
46
SERVOS
24
43
AFCS
YAW
39
43
PITCH
40
43
ROLL
41
43
LIFT
34
42
31
SENSOR 1
SENSOR 2
SENSOR N
27
30
45
MIXING
48
SERVOS
49
51
TAIL ROTOR
32
25
43
VCS
PITCH
60
43
ROLL
59
61

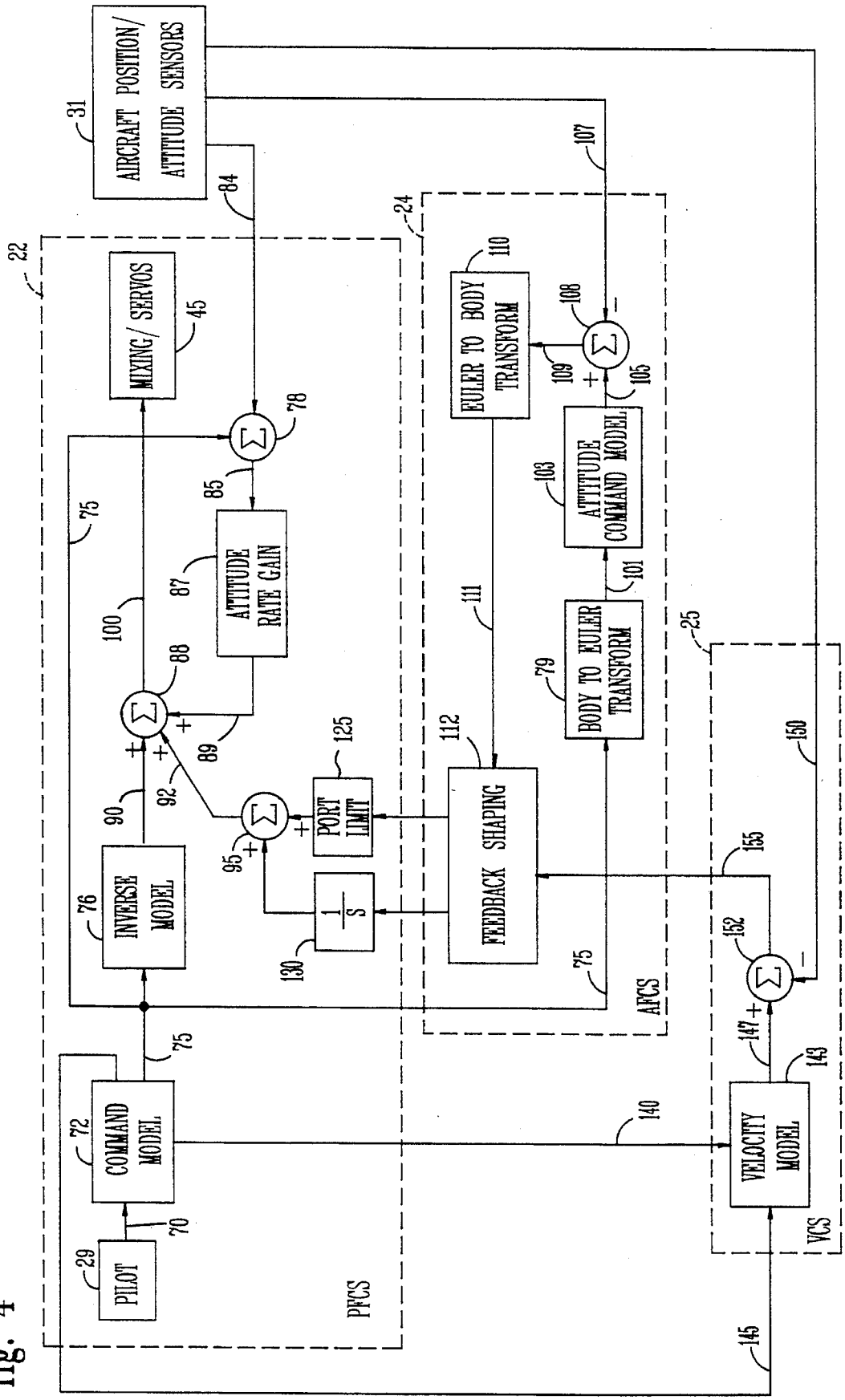
AIRCRAFT POSITION/ ATTITUDE SENSORS
31
84
107
22
24
MIXING/ SERVOS
45
EULER TO BODY TRANSFORM
110
108
109
105
78
85
ATTITUDE COMMAND MODEL
103
75
ATTITUDE RATE GAIN
87
100
111
101
88
BODY TO EULER TRANSFORM
79
25
89
125
112
150
92
90
PORT LIMIT
95
165
INVERSE MODEL
76
1/S
130
FEEDBACK SHAPING
152
75
AFCS
147
75
149
COMMAND MODEL
72
140
VELOCITY MODEL
70
29
PILOT
PFCS
VCS
145

fig. 4

fig. 5

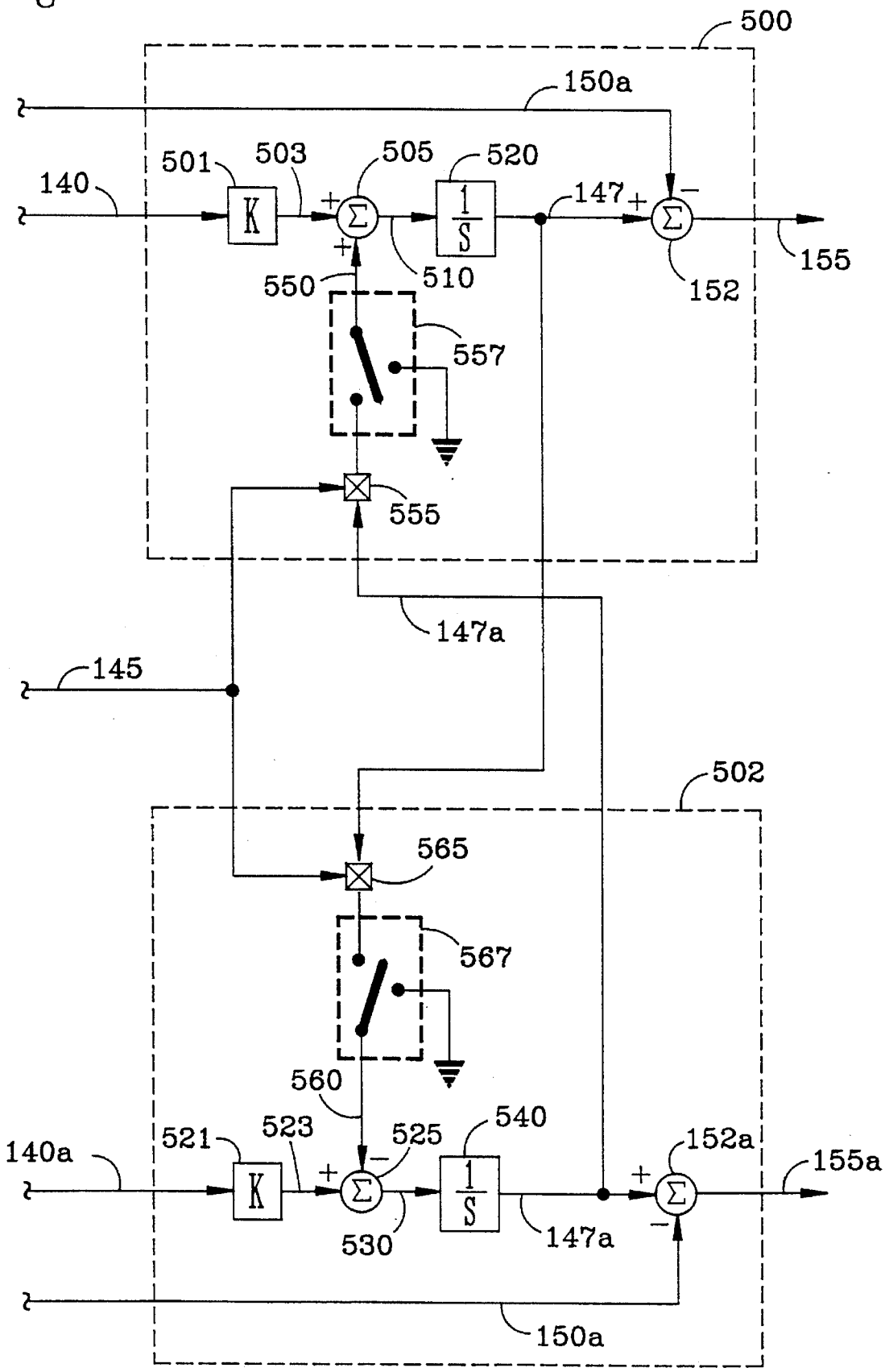
500
150a
140
501
503
505
520
147
155
550
510
152
557
555
147a
145
502
565
567
560
540
521
523
525
152a
155a
140a
530
147a
150a

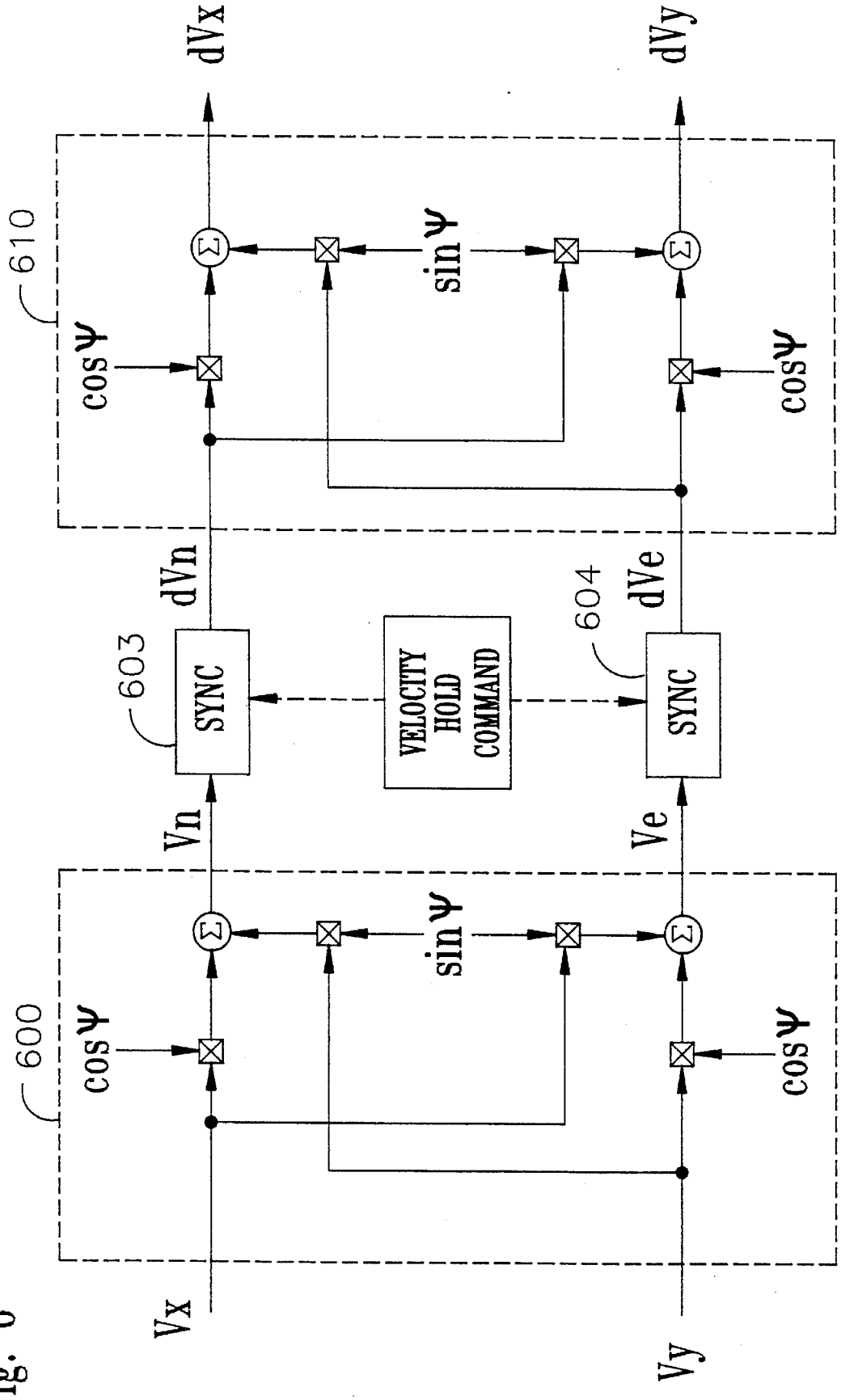
dVx
dVy
610
cos Ψ
sin Ψ
cos Ψ
dVn
dVe
603
604
SYNC
VELOCITY HOLD COMMAND
SYNC
Vn
Ve
600
cos Ψ
sin Ψ
cos Ψ
Vx
Vy

fig. 6

INERTIAL VELOCITY COMMAND SYSTEM

The Government has rights in this invention pursuant to Contract No. DAAJ09-91-C-A004 awarded by the Department of the Army.

TECHNICAL FIELD

The present invention relates to aircraft velocity command systems, and more particularly to a velocity command system having an inertial reference which allows a pilot to yaw the aircraft during operation in a velocity stabilization mode without changing the flight path of the aircraft with respect to the inertial reference.

BACKGROUND OF THE INVENTION

In automatic flight control systems, it is well known to provide a velocity stabilization mode (velocity hold mode) wherein the automatic flight control system maintains the aircraft's body referenced velocities constant during operation in the velocity hold mode. This is particularly useful in a variety of aircraft operating conditions to reduce the pilot workload, maximize fuel efficiency, maintain aircraft position with respect to a mission flight plan, and for a variety of other purposes.

During operation in a velocity hold mode, there are a number of situations wherein a pilot may desire to yaw or turn the aircraft while maintaining the velocity hold mode. For example, the pilot may wish to yaw the aircraft to perform a sensor sweep, or for weapons firing. However, during operation in an aircraft body referenced velocity hold mode, the aircraft flight path will change in response to a pilot yaw input. This is illustrated in FIG. **1** wherein an aircraft **10** maintains a constant body referenced velocity both before **11** and after **11***a* a yaw maneuver, and therefore assumes a new flight path after the maneuver. During certain aircraft operations, and particularly during nap of the earth flight operations wherein the aircraft maintains an altitude close to the ground, a change in aircraft flight path in response to a yaw input may be undesirable. This is true when there are obstacles, e.g.,, buildings, trees, mountains etc., on either side of the flight path which the aircraft may encounter on the change in flight path.

DISCLOSURE OF INVENTION

Objects of the invention include provision of an improved aircraft velocity command system having an inertial frame of reference.

Another object of the present invention is to provide an aircraft velocity command system which allows the pilot, during operation in a velocity stabilization mode, to yaw the aircraft from side to side without changing the inertial flight path of the aircraft.

According to the present invention, a velocity command system is provided with a velocity stabilization mode wherein aircraft flight path referenced velocities are determined with respect to an inertial frame of reference, the flight path referenced velocities are held constant during pilot commanded yaw maneuvers so that the aircraft maintains a fixed inertial referenced flight path regardless of the pointing direction of the aircraft.

In further accord with the present invention, velocity control with respect to an inertial frame of reference is accomplished by controlling the aircraft flight path based on aircraft body referenced commanded lateral and longitudinal acceleration and based on aircraft body referenced lateral and longitudinal centrifugal acceleration.

In still further accord with the present invention, operation in the velocity stabilization mode is provided in response to the manual activation of the velocity stabilization mode by the pilot, provided that the aircraft is already operating in the ground speed mode and the aircraft is not in a coordinated turn.

The inertial referenced velocity command system of the present invention allows a pilot to yaw the aircraft nose from side to side during operation in the velocity stabilization mode without changing the flight path of the aircraft with respect to an inertial frame of reference. Therefore, during restricted flight path operations, such as during nap of the earth flight operations, a pilot can turn the aircraft to perform a sensor sweep or to aim weapons without changing the aircraft inertial flight path. Conventional velocity hold systems maintain aircraft body referenced velocity and do not maintain the aircraft's inertial flight path when yaw inputs are applied. It would require a significant amount of pilot workload in order to manually perform an inertial reference velocity hold task.

The foregoing and other objects, features and advantages of the present invention will become more apparent in light of the following detailed description of exemplary embodiments thereof as illustrated in the accompanying drawings.

BRIEF DESCRIPTION OF THE DRAWINGS

FIG. **1** is a diagram showing a change in vehicle flight path in response to a pilot yaw command during operation in a velocity hold mode of a vehicle having a body referenced velocity hold control system;

FIG. **2** is a diagram showing the response of a vehicle to a pilot yaw command during operation in a velocity stabilization mode, the aircraft having an inertial referenced velocity command system of the present invent)on;

FIG. **3** is a schematic block diagram of the velocity command system of the present invention in relation to an aircraft flight control system;

FIG. **4** is a simplified schematic block diagram of the flight control system and velocity command system of FIG. **3**;

FIG. **5** is a more detailed schematic block diagram of the velocity command system of FIGS. **3** and **4**; and

FIG. **6** is a schematic block diagram of an alternative embodiment of the velocity command system of FIG. **5**.

BEST MODE FOR CARRYING OUT THE INVENTION

The inertial referenced velocity command system of the present invention is particularly well suited for allowing a pilot to yaw an aircraft from side to side while maintaining a specific or selected course, without changing the aircraft flight path with respect to an inertial frame of reference. Referring to FIG. **2**, an aircraft **10** is shown operating in a velocity stabilization mode having a fixed velocity along a selected flight path as indicated by velocity vector **12**. In response to a yaw command by a pilot during operation in a velocity stabilization mode, the aircraft **10***a* yaws while maintaining a constant flight path reference velocity **12***a* with respect to an inertial frame of reference.

The velocity command system will be described with respect to a model following flight control system for a rotary winged aircraft; however, it will be understood by

those skilled in the art that the velocity stabilization control of the present invention is applicable to conventional control systems, and to both fixed and rotary winged aircraft.

Referring to FIG. **3**, a flight control system **21** includes a primary flight control system (PFCS) **22**, an automatic flight control system (AFCS) **24** and a velocity command system (VCS) **25**. The PFCS receives displacement command output signals from a displacement collective stick **26** on lines **27**. The AFCS also receives collective stick discrete output signals on the lines **27**. The PFCS and AFCS each receive the force output command signals of a four-axis sidearm controller **29** on lines **30** and sensed parameter signals from sensors **31** on lines **32**. The pilot command signals on lines **27** and **30** and the sensed parameter signals on lines **32** are shown consolidated within trunk lines **33** and **34** in the PFCS and AFCS, respectively.

The PFCS and AFCS each contain control modules for controlling the yaw, pitch, roll and lift axes of the aircraft. These modules are shown by blocks **35–38** for the PFCS and blocks **39–42** for the AFCS. The PFCS modules provide rotor command signals, and the AFCS modules provide conditioning and/or trimming of the PFCS rotor command signals. The PFCS and AFCS modules are interconnected through bus **43**.

The PFCS and AFCS use a model following algorithm in each control axis to provide rotor command signals on output lines **44** to a rotor mixing function **45** which commands displacement of mechanical servos **46** and linkages **47** to control the tip path plane of a main rotor **50**. Additionally, the rotor mixing function **45** controls tail rotor servos **48** which control the thrust of a tail rotor **51** through linkages **49**. The sensed parameter signals from sensors **31**, on lines **32**, provide the PFCS and AFCS with the aircraft's angular rate and attitude response to the main rotor and tail rotor command signals. Additionally, the sensors provide information related to velocity, altitude, acceleration, etc., which information may or may not be used by the flight control system.

The VCS **25** receives the force output command signals of the sidearm controller **29** on lines **30** and sensed parameter signals from sensors **31** on lines **32**. The pilot command signals on lines **30** and the sensed parameter signals on lines **32** are shown consolidated within trunk lines **59** in the VCS.

The VCS contains control channel modules for providing pitch axis and roll axis velocity error signals to the AFCS. These modules are shown by blocks **60** and **61**, respectively. The VCS modules are interconnected to the PFCS and AFCS modules through the bus **43**. As described in greater detail hereinafter, during operation in the velocity stabilization mode, the VCS velocity error signals are fed back through PFCS proportional and integral paths to drive the error signals to zero.

FIG. **4** illustrates the functional interconnection of the VCS **25** with the PFCS **22** and the AFCS **24**. FIG. **4** will be described with respect to the pitch axis modules **36**, **40**, **60**, e.g., flight control pitch attitude reference and VCS pitch axis velocity error signals; however, it will be understood by those skilled in the art that the functional interconnection of FIG. **4** is equally applicable to flight control roll attitude reference and VCS roll axis velocity error signals.

The PFCS receives a pitch axis command signal on line **70**, provided through trunk lines **33** and lines **30**, from the sidearm controller **29** (FIG. **3**). In the present embodiment, the sidearm controller is a four-axis force stick in which yaw axis command signals are generated by the pilot's lateral twisting (left or right) of the sidearm controller, pitch axis command signals are generated by the pilot's pushing and pulling (front or back) of the sidearm controller, and roll axis command signals are generated by the pilot applying a left or right force to the sidearm controller. The pitch command signal is presented to the input of a pitch axis command model **72**. In the command model **72**, pilot commands are shaped to yield a desired rate and/or attitude response. The desired rate response is provided on a line **75** in a feedforward path to an inverse model **76** of the vehicle dynamics. The inverse model **76** provides a control command signal on a line **90** which represents the approximate rotor command necessary to achieve the desired pitch axis rate of change of the aircraft for each pilot commanded maneuver, and provides the primary control input to the rotor mixing function **45**.

The desired rate response on the line **75** is also provided to a summing junction **78** in the PFCS, and to a Body to Euler Transformation **79** in the AFCS. The summing junction **78** compares the desired rate response on line **75** with the aircraft's actual pitch rate, received (from sensors **31**, through lines **32** and trunk **33**) as a sensed pitch rate signal on line **84**. The output of the summing junction **78** is a pitch rate error signal on a line **85**. The rate error signal is applied to a proportional gain function **87** (to reduce the error), the output of which is provided on a line **89** to a summing junction **88**. The summing junction **88** also receives the control command signal on line **90** from the inverse model **76**, and a pitch command modifying signal on a line **92** from a summing junction **95**. The output of the summing junction **88** is provided on a line **100**, and presented through the PFCS output trunk lines **44** to the mixing function **45**.

The magnitude and rate of change of the pitch command modifying signal from the AFCS is a function of the aircraft pitch error. The pitch command modifying signal is a calculated value provided by a model following algorithm within the AFCS, based on the actual aircraft response to the rotor command signal. The pitch command modifying signal modifies the rotor command signal to achieve the pilot commanded pitch attitude. A more detailed description of the model following algorithms of the AFCS, and AFCS architecture, is given in commonly owned U.S. Pat. No. 5,238,203, entitled "High Speed Turn Coordination For A Rotary Wing Aircraft", the disclosure of which is incorporated herein by reference.

A pitch attitude feedback error signal is used to provide the pitch command modifying signal. The attitude feedback error signal is developed in the AFCS. The desired rate response is provided on the line **75** to the Body to Euler Transformation **79**. The Transformation **79** transforms the desired rate response, which is in terms of aircraft body axes, to an inertial axes reference. The output of the transformation **79** is provided on a line **101** to an AFCS attitude command model **103**. The attitude command model **103** is an integral function which converts the desired rate response to a desired pitch attitude signal on a line **105**. The desired pitch attitude signal is provided to a summing junction **108**, the other input of which is a pitch attitude signal on a line **107**, provided from sensors **31**, through lines **32** and trunk **34** (FIG. **3**). The output of the summing junction **108** is a pitch attitude feedback error signal on a line **109** in terms of inertial axes, which is provided to a Euler to Body Transform **110** which transforms the pitch attitude feedback error signal from an inertial axes reference back to an aircraft body axes reference on a line **111**. The operation of both Transform functions **79**, **110** are described in greater detail in the aforementioned commonly owned U.S. Pat. No. 5,238,203, the disclosure of which is incorporated herein by reference.

The pitch attitude feedback error signal on the line **111** is applied to feedback shaping circuitry **112** and thereafter via a proportional path containing a gain function **125** to the summing junction **95**. The pitch attitude feedback signal is also applied to the summing junction **95** via an integral path containing an integral function **130**. The output of the summing junction **95** is the pitch command modifying signal on the line **92**.

The command model **72** provides a desired attitude response signal on a line **140** to a velocity model **143** in the VCS. Additionally, the command model for the yaw axis provides a desired yaw axis rate response, i.e., desired heading rate, on a line **145** to the velocity model **143**. In order to hold the flight path referenced velocities constant, centrifugal acceleration terms caused by the pilot yawing the vehicle are included in the velocity model. As described in greater detail hereinafter with respect to FIG. **5**, the velocity model uses the heading rate signal on the line **145** and the desired attitude response for the pitch axis and the yaw axis to develop centrifugal acceleration terms. The acceleration terms are combined with derived pilot on-axis acceleration commands, and the result is integrated to yield a desired commanded velocity signal on a line **147**. The commanded velocity signal on the line **147** is compared with ground reference velocity signals provided on a line **150** (from sensors **31** through lines **32** and trunk **33**) in a summing junction **152**. The output of the summing junction **152** is a velocity error signal which is fed back via the feedback shaping circuitry **122** through the proportional **125** and integral **130** paths to drive the velocity errors to zero.

The feedback shaping circuitry **112** may be of any suitable type known in the art for providing selection and/or transition between attitude feedback signals and velocity error signals as applicable. For example, when the velocity stabilization mode is not activated, the feedback shaping circuitry **112** provides the attitude feedback signals to the integral and proportional paths. However, upon activation of the velocity stabilization mode, the feedback shaping circuitry replaces the attitude feedback signals with the velocity error signals for the integral path and provides a combination of attitude feedback signals and velocity error signals to the proportional path. The above description of the feedback shaping circuitry **112** is provided for illustrative purposes only, and the circuitry will vary depending on the dynamics and characteristics of the plant being controlled. As will be apparent to those skilled in the art, transient free switching may be used to transition between attitude feedback signals and velocity error signals.

Referring now to FIG. **5**, the velocity command system **25** for the pitch axis and the roll axis are shown in greater detail. Upon activation of the velocity stabilization mode, the command model **72** (FIG. **4**) provides a desired rate response **75** and a desired attitude response **140** for the pitch and roll attitude axes so that the helicopter maintains an attitude necessary to maintain a constant or fixed desired velocity. The velocity command system **25** of the present invention is operative to maintain the desired velocity constant with respect to an inertial frame of reference.

In a pitch axis module **500**, the desired pitch axis attitude response is provided on a line **140** to a gain function **501** wherein the commanded attitude is multiplied by the gravitational constant, g, i.e., 9.81 m/sec^2 or 32.2 ft/sec^2. The output of the multiplication function **501** is an acceleration term provided on a line **503** to a summing junction **505**. As will be understood by those skilled in the art, a pitch axis or roll axis command for a rotary wing aircraft is proportional to an acceleration command, i.e., by multiplying the axis command by the gravitational constant. For a fixed wing aircraft (or other type of vehicle) an explicit acceleration command may be used to provide the pitch axis acceleration term on the line **503**.

The other input to the summing junction is a centrifugal acceleration term which will be described in greater detail hereinafter. The output of the summing junction **505** is an acceleration term which is provided on a line **510** to an integrator **520**, the output of which is a desired pitch axis commanded velocity signal on the line **147**. The desired commanded velocity signal is provided to the summing junction **152** the other input of which is the longitudinal ground speed signal on the line **150**. The summing junction **152** compares the commanded velocity with the actual velocity, and provides as its output a pitch axis velocity error signal on the line **155** which is provided via the PFCS integral path and proportional path to drive the velocity error to zero.

The roll axis velocity error is developed in a roll axis module **502** in the same way that the pitch axis velocity error is developed. The desired roll axis attitude response is provided on a line **140**a to a gain function **521** wherein the attitude command is multiplied by the gravitational constant, g. The output of the gain function **521** is provided on a line **523** to a summing junction **525**. The other input to the summing junction **525** is a centrifugal acceleration term which will be described in greater detail hereinafter. The output of the summing junction **525** is provided on a line **530** to an integrator **540**. The output of the integrator **540** is a desired roll axis commanded velocity signal on a line **147***a* which is provided to a summing junction **152***a* where it is compared with a lateral ground speed signal on a line **150***a*. The output of the summing junction **152***a* is a roll axis velocity error signal on a line **155***a*.

In order to hold the flight path (inertial) referenced velocities constant, centrifugal acceleration terms which are caused by the pilot yawing the vehicle must be included in the pitch axis and roll axis velocity models. A longitudinal centrifugal acceleration term is provided on a line **550** to the summing junction **505**. The longitudinal centrifugal acceleration term is determined by a multiplication function **555** as the product of the commanded heading rate on line **145** and the desired roll axis commanded velocity signal on the line **147***a*. The output of the multiplication function **555** is provided via normally closed switch **557** to the summing junction **505** via the line **550**. The normally closed switch **557** opens in response to the aircraft operating in the automatic turn coordination mode. The lateral centrifugal acceleration term is provided as the output of multiplication function **565** via normally closed switch **567** and line **560** to the summing junction **525**. The lateral centrifugal acceleration term is determined by the multiplication function **565** as the product of the commanded heading rate on the line **140** and the desired pitch axis velocity command signal on the line **147**. If the aircraft is in a coordinated turn, switches **557** and **657** are opened, and the centrifugal acceleration terms are set equal to zero.

The velocity stabilization described thus far is applicable to an aircraft flight control system implemented using model following algorithms. However, the inertial reference velocity command system of the present invention may be implemented in a conventional flight control system using the simplified coordinate system transformations illustrated in FIG. **6**. Referring to FIG. **6**, aircraft body reference velocities (velocity vectors Vx and Vy) are converted to inertial reference velocities (velocity vectors Vn and Ve) using a body to inertial transformation function **600**. The body to

inertial transformation **600** uses equations 1 and 2 below to transform body referenced velocities to inertial referenced velocities:

$$V_n=V_x \cos(\Psi)-V_v \sin(\Psi) \quad \text{(eq. 1)}$$

$$V_e=V_x \sin(\Psi)-V_y \cos(\Psi) \quad \text{(eq. 2)}$$

wherein Vn is aircraft inertial referenced longitudinal velocity, e.g., in the North/South direction; Ve is aircraft inertial referenced lateral velocity, e.g., in the East/West direction; Vx is aircraft body referenced longitudinal velocity; Vy is aircraft body referenced lateral velocity; and Ψ is vehicle heading.

Upon activation of the inertial reference velocity synchronization mode, synchronization functions **603** and **604** store the instantaneous values of the inertial referenced velocity vectors. During operation in the inertial referenced velocity synchronization mode, the synchronization functions **603** and **604** compare the aircraft's actual inertial referenced velocity to the stored inertial referenced velocity values to develop inertial referenced velocity error signals, dVn and dVe. Thereafter, the inertial referenced velocity error signals are provided to an inertial to body transformation function **610** which converts the error signals from an inertial reference back to a body reference. The inertial to body transformation function **610** uses equations 3 and 4 below;

$$dV_x=dV_n \cos(\Psi)+dV_e \sin(\Psi) \quad \text{(eq. 3)}$$

$$dV_y=-dV_n \sin(\Psi)+dV_e \cos(\Psi) \quad \text{(eq. 4)}$$

wherein dVn is aircraft inertial referenced longitudinal velocity error; dVe is aircraft inertial referenced lateral velocity error; dVx is aircraft body referenced longitudinal velocity error; and dVy is aircraft body referenced lateral velocity error.

Thereafter, the conventional control system provides the body referenced error signals via feedback paths, which may or may not contain proportional and integral paths, to drive the velocity errors to zero.

The invention is described herein as being responsive to command signals provided by a four-axis side arm controller used with a model following control system. However, the invention will work equally as well with a flight control system wherein control surface commands are provided by conventional control inputs such as a mechanical displacement control stick and pilot operated pedals. Alternatively, other combinations of mechanical, electro-mechanical and electronic control may be used. It is also anticipated that the invention would be equally applicable to remotely piloted vehicles.

Although the centrifugal acceleration term (on lines **550** and **560** of FIG. **5**) are shown and described as being developed in response to commanded heading rate, it is expected that actual heading rate may also be used to develop the centrifugal acceleration terms. However, it may be desirable when using actual heading rate to provide filtering to reduce the effects of wind gusts and external forces on measured heading rate.

Although the invention has been described and illustrated with respect to exemplary embodiments thereof, it should be understood by those skilled in the art that the foregoing and various other changes, omissions and additions may be made therein and thereto without departing from the spirit and scope of the present invention.

We claim:

1. An aircraft flight control system for providing control surface command signals to the aircraft control surfaces thereby controlling the yaw, pitch, roll and lift attitude axes of the aircraft in flight, comprising:

velocity stabilization means for providing a velocity stabilization signal in response to the activation of a velocity stabilization mode; and

velocity command means responsive to the presence of said velocity stabilization signal for maintaining a constant aircraft velocity with respect to an inertial reference.

2. An aircraft flight control system according to claim **1** wherein said velocity command means further comprises:

means for providing reference signals corresponding to a desired constant aircraft velocity with respect to an inertial reference;

means for providing inertial velocity signals indicative of aircraft velocity with respect to said inertial reference;

means responsive to said reference signals and said inertial velocity signals for providing inertial velocity error signals indicative of the difference there between; and

said flight control system providing control surface command signals to drive the magnitude of said inertial velocity error signals to zero when said velocity stabilization signal is present.

3. An aircraft flight control system according to claim **1** wherein said velocity command means further comprises:

means for providing reference signals corresponding to a desired constant aircraft velocity with respect to an inertial reference;

means for providing aircraft velocity signals indicative of aircraft velocity with respect to an aircraft frame of reference;

means for converting said aircraft velocity signals to inertial velocity signals indicative of aircraft velocity with respect to said inertial reference;

means responsive to said reference signals and said inertial velocity signals for providing inertial velocity error signals indicative of the difference there between;

means for converting said inertial velocity error signals to aircraft velocity error signals indicative of the required change in aircraft velocity for the aircraft to operate at said constant velocity with respect to an inertial reference; and

said flight control system providing control surface command signals to drive the magnitude of said aircraft velocity error signals to zero when said velocity stabilization signal is present.

4. An aircraft flight control system according to claim **1** wherein said velocity command means further comprises:

velocity error means for providing velocity error signals for the pitch axis and the roll axis indicative of the aircraft attitude rate of change for the pitch axis and the roll axis, respectively, required to maintain said constant aircraft velocity with respect to an inertial reference; and

said flight control system being responsive to the presence of said velocity stabilization signal for providing control surface command signals to drive the magnitude of said velocity error signals to zero.

5. An aircraft flight control system according to claim **4** wherein said means for providing velocity error signals further comprises:

control means operable by a pilot to provide axis command signals for controlling the yaw, pitch, roll and lift attitude axes of the aircraft;

means responsive to said axis command signals for providing corresponding desired attitude signals indicative of a desired aircraft attitude in the yaw, pitch, roll and lift attitude axes;

means responsive to said axis command signals for providing corresponding desired rate signals indicative of a desired aircraft attitude rate of change in the yaw, pitch, roll and lift attitude axes;

velocity command means responsive to said desired attitude signals for the aircraft pitch axis and roll axis and said desired rate signal for the aircraft yaw axis for providing desired pitch and roll axis velocity command signals corresponding to the aircraft body referenced velocity required to maintain said desired aircraft velocity with respect to an inertial reference;

means for providing actual aircraft pitch and roll axis velocity signals indicative of actual aircraft body referenced velocity; and

said velocity error means providing said pitch axis velocity error signals as the difference between said pitch axis velocity command signals and said actual aircraft pitch axis velocity signals and providing said roll axis velocity error signals as the difference between said roll axis velocity command signals and said actual aircraft roll axis velocity signals.

6. An aircraft flight control system according to claim **5** wherein said velocity command means further comprises:

means responsive to said desired attitude signals for the aircraft pitch axis and roll axis for providing pitch and roll axis acceleration command signals;

means for providing a longitudinal centrifugal acceleration signal as the product of said roll axis velocity command signal and said desired rate signal for the aircraft yaw axis;

means for providing a lateral centrifugal acceleration signal as the product of said pitch axis velocity command signal and said desired rate signal for the aircraft yaw axis;

means for providing said pitch axis velocity command signal as the integral of the sum of said pitch axis acceleration command signal and said longitudinal centrifugal acceleration signal; and

means for providing said roll axis velocity command signal as the integral of the sum of said roll axis acceleration command signal and said lateral centrifugal acceleration signal.

7. An aircraft flight control system according to claim **1** wherein said velocity command means comprises:

means for providing a longitudinal and lateral axis acceleration command signal indicative of a commanded acceleration with respect to a longitudinal axis and a lateral axis of the aircraft, respectively;

means for providing a longitudinal and a lateral centrifugal acceleration signal indicative of a centrifugal acceleration in said longitudinal axis and said lateral axis, respectively;

means for providing a longitudinal axis velocity command signal as the integral of the sum of said longitudinal axis acceleration command signal and said longitudinal centrifugal acceleration signal;

means for providing a lateral axis velocity command signal as the integral of the sum of said lateral axis acceleration command signal and said lateral centrifugal acceleration signal;

means for providing an aircraft longitudinal and lateral velocity signal indicative of the velocity of said aircraft in said longitudinal and lateral axes, respectively;

mean for providing longitudinal velocity error signals indicative of the difference between said longitudinal axis velocity command signals and said aircraft longitudinal velocity signals, and for providing lateral velocity error signals indicative of the difference between said lateral axis velocity command signals and said aircraft lateral velocity signals;

said flight control system providing control surface command signals to drive the magnitude of said longitudinal and lateral velocity error signals to zero when said velocity stabilization signal is present.

8. An aircraft flight control system according to claim **7** further comprising:

heading rate means for providing a heading rate signal indicative of a rate of change of aircraft heading;

said longitudinal centrifugal acceleration signal being indicative of the product of said heading rate signal and said lateral axis velocity command signal; and

said lateral centrifugal acceleration signal being indicative of the product of said heading rate signal and said longitudinal axis velocity command signal.

9. An aircraft flight control system according to claim **8** wherein said heading rate signal is indicative of a desired aircraft heading rate.

10. An aircraft flight control system according to claim **8** wherein said heading rate signal is indicative of actual aircraft heading rate.

11. An aircraft flight control system according to claim **4** wherein said velocity error means further comprises:

means for providing reference signals corresponding to a desired constant aircraft velocity with respect to an inertial reference;

means for providing inertial velocity signals indicative of aircraft velocity with respect to said inertial reference;

means responsive to said reference signals and said inertial velocity signals for providing inertial velocity error signals indicative of the difference there between; and

said flight control system providing control surface command signals to drive the magnitude of said inertial velocity error signals to zero when said velocity stabilization signal is present.

12. An aircraft flight control system according to claim **4** wherein said velocity error means further comprises:

means for providing reference signals corresponding to a desired constant aircraft velocity with respect to an inertial reference;

means for providing aircraft velocity signals indicative of aircraft velocity with respect to an aircraft frame of reference;

means for converting said aircraft velocity signals to inertial velocity signals indicative of aircraft velocity with respect to said inertial reference;

means responsive to said reference signals and said inertial velocity signals for providing inertial velocity error signals indicative of the difference there between;

means for converting said inertial velocity error signals to aircraft velocity error signals indicative of the required change in aircraft velocity for the aircraft to operate at said constant velocity with respect to an inertial reference; and

said flight control system providing control surface command signals to drive the magnitude of said aircraft velocity error signals to zero when said velocity stabilization signal is present.

* * * * *