United States Patent [19]

Caldwell et al.

[11] **Patent Number: 5,001,646**

[45] **Date of Patent: Mar. 19, 1991**

[54] **AUTOMATED HELICOPTER FLIGHT CONTROL SYSTEM**

[75] Inventors: **Donald G. Caldwell**, Mesa; **Stephen S. Osder**, Scottsdale, both of Ariz.

[73] Assignee: **McDonnell Douglas Corporation**, Long Beach, Calif.

[21] Appl. No.: **286,235**

[22] Filed: **Dec. 19, 1988**

[51] **Int. Cl.**[5] **B64C 13/04**; B64C 13/16

[52] **U.S. Cl.** **364/434**; 364/424.01

[58] **Field of Search** 364/433, 434, 452, 449; 244/17.11, 17.13, 17.25, 237, 178, 192, 179, 180, 191, 175, 177; 318/584–586

[56] **References Cited**

U.S. PATENT DOCUMENTS

3,382,283	5/1983	Clelford et al.	364/434
3,711,042	1/1973	Rempfer et al.	244/191
4,116,405	9/1978	Bacchi et al.	244/12.4
4,150,686	4/1979	El Sherif et al.	137/377
4,243,358	1/1981	Carlock et al.	416/114
4,270,168	5/1981	Murphy et al.	364/200
4,281,811	8/1981	Nixon	244/178
4,313,201	1/1982	Fischer et al.	371/68
4,330,829	5/1982	Fischer et al.	364/434
4,354,230	10/1982	Murphy et al.	364/200
4,355,358	10/1982	Clelford et al.	364/424
4,362,085	12/1982	Venuti, Jr.	91/186
4,382,281	5/1983	Fowler et al.	364/424
4,412,280	10/1988	Murphy et al.	364/200
4,420,808	12/1983	Diamond et al.	364/434
4,436,018	3/1984	Murphy et al.	91/363
4,443,853	4/1984	Maciolek et al.	364/434
4,484,283	11/1984	Verzella et al.	364/434
4,500,967	2/1985	Murphy et al.	364/434
4,517,639	5/1985	Ferrell et al.	364/186
4,542,506	9/1985	Oe et al.	371/9
4,542,679	9/1985	Murphy et al.	91/363
4,563,743	1/1986	Murphy et al.	318/584
4,564,908	1/1986	Clelford et al.	364/433
4,617,662	10/1986	Auer, Jr. et al.	371/25
4,648,345	3/1987	Wham et al.	114/338
4,679,151	7/1987	Morris et al.	364/510
4,697,768	10/1987	Klein	364/434
4,713,757	12/1987	Davidson et al.	364/200
4,801,110	1/1989	Skutecki	244/17.13

Primary Examiner—Parshotam S. Lall
Assistant Examiner—Michael Zanelli
Attorney, Agent, or Firm—Curt L. Harrington; George W. Finch; John P. Scholl

[57] **ABSTRACT**

An apparatus and method for controlling the flight of a helicopter, in which the pilot commands vehicle state changes, embodies several significant advances to the helicopter control art. Among these are control decoupling to reduce undesired helicopter responses in other axes to pilot inputs in one axis, task oriented control modes which are selected automatically, and automatic control of engine torque and rotor speed constraints. Novel task oriented control modes include independent control of heading and ground track at low speed and turn rate and flight path angle control at higher speeds. Control decoupling is achieved through a combination of force/moment decoupling and open loop prediction methods. Vertical control, traditionally accomplished with collective only, is accomplished in this system with a combination of longitudinal cyclic and collective control, increasing vertical response performance and minimizing engine power change demands. These flight control automation methods were designed to enable the use of small displacement, multi-axis controllers for full envelope helicopter control; the system provides dramatic pilot work load reduction for any of wide range of pilot manipulator configurations.

21 Claims, 10 Drawing Sheets

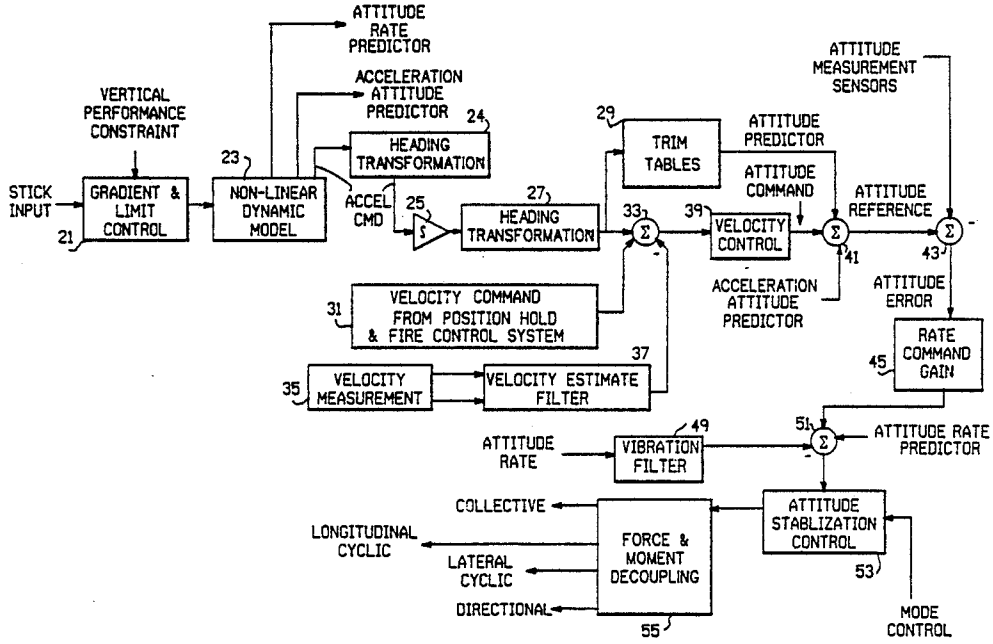

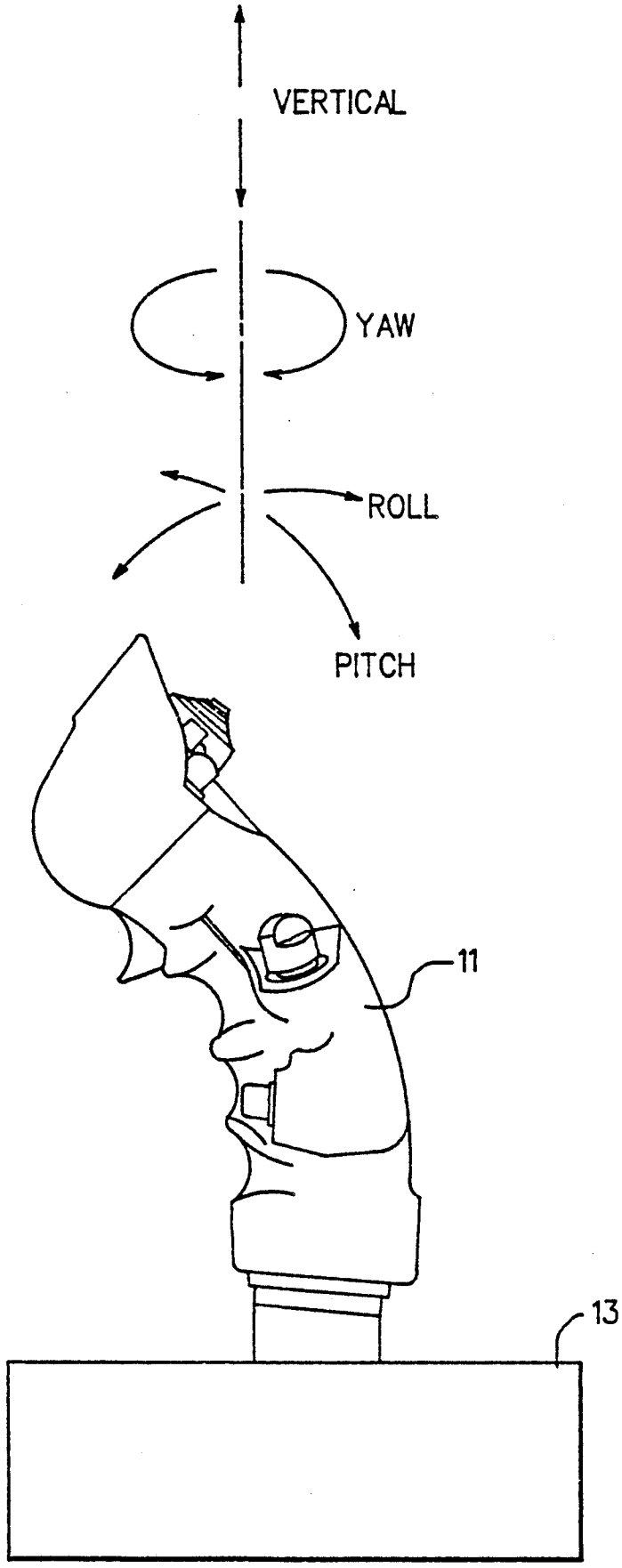

FIG. 1

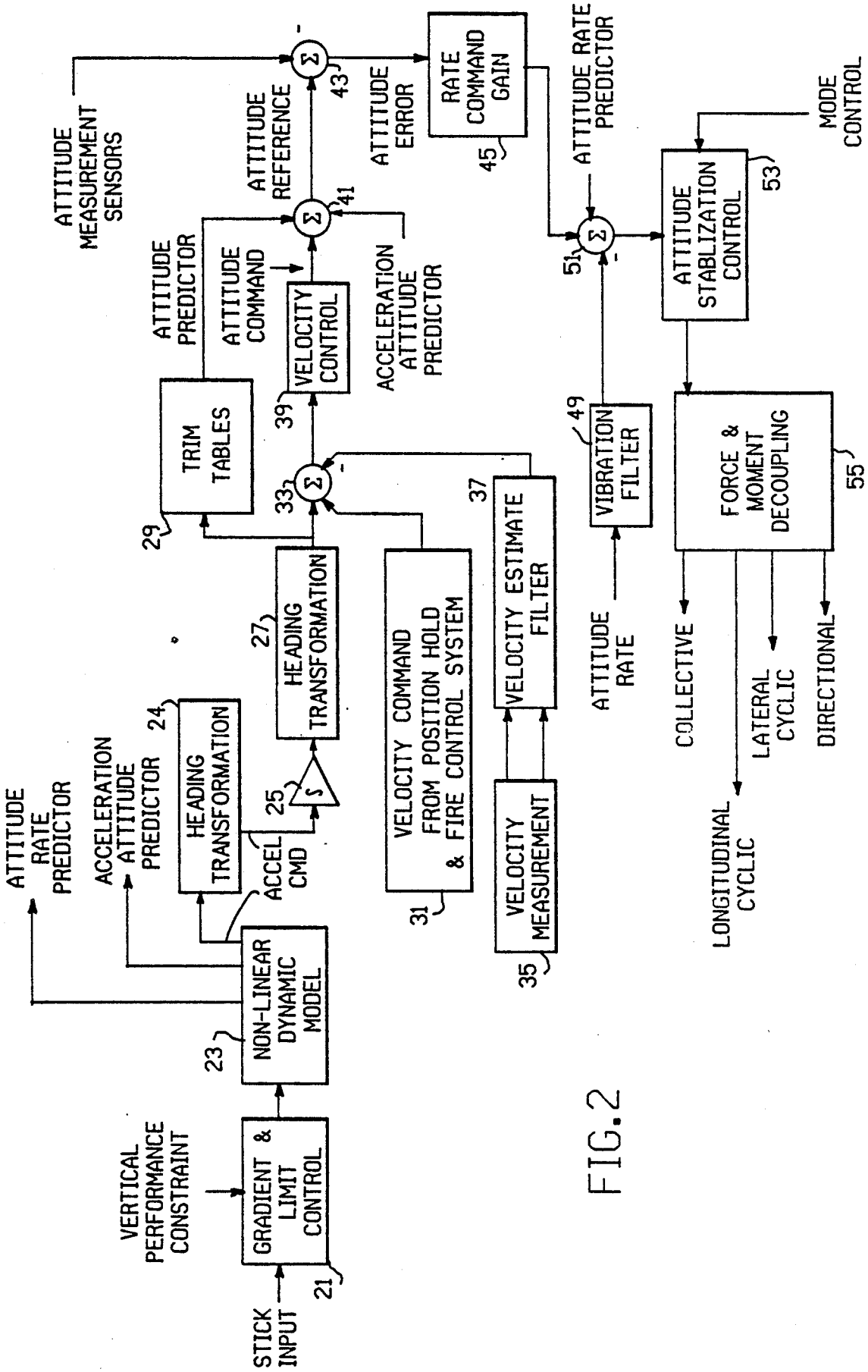
ATTITUDE MEASUREMENT SENSORS
ATTITUDE REFERENCE
43
ATTITUDE ERROR
RATE COMMAND GAIN
45
ATTITUDE RATE PREDICTOR
MODE CONTROL
ATTITUDE PREDICTOR
ATTITUDE COMMAND
41
ACCELERATION ATTITUDE PREDICTOR
51
ATTITUDE STABLIZATION CONTROL
53
TRIM TABLES
29
VELOCITY CONTROL
39
33
49
VIBRATION FILTER
FORCE & MOMENT DECOUPLING
55
37
VELOCITY ESTIMATE FILTER
HEADING TRANSFORMATION
27
VELOCITY COMMAND FROM POSITION HOLD & FIRE CONTROL SYSTEM
31
ATTITUDE RATE
COLLECTIVE
LATERAL CYCLIC
DIRECTIONAL
ATTITUDE RATE PREDICTOR
ACCELERATION ATTITUDE PREDICTOR
24
HEADING TRANSFORMATION
25
ACCEL CMD
VELOCITY MEASUREMENT
35
LONGITUDINAL CYCLIC
NON-LINEAR DYNAMIC MODEL
23
VERTICAL PERFORMANCE CONSTRAINT
GRADIENT & LIMIT CONTROL
21
STICK INPUT

FIG. 2

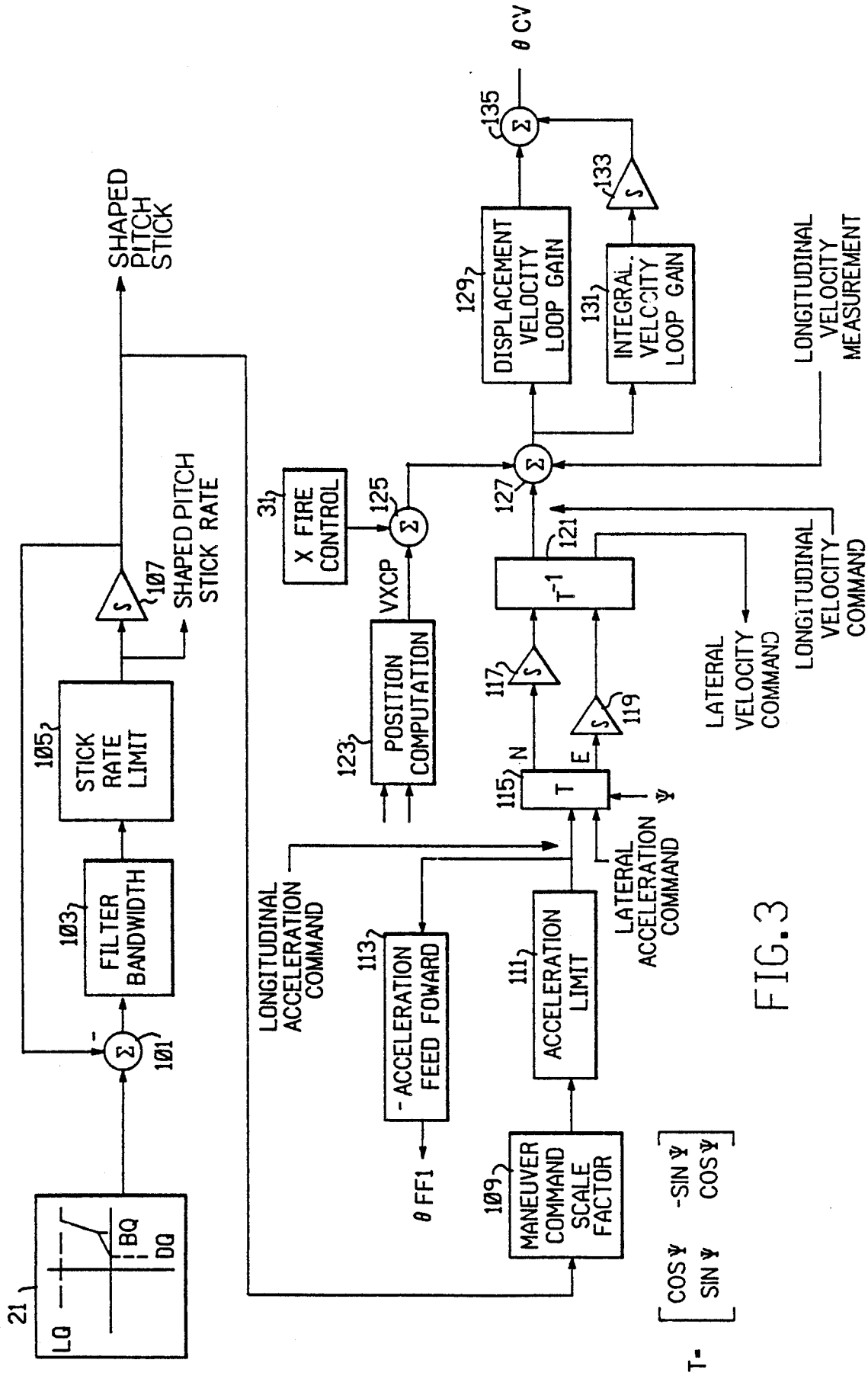
21
LQ
BQ
DQ
101
103
FILTER BANDWIDTH
105
STICK RATE LIMIT
107
SHAPED PITCH STICK RATE
SHAPED PITCH STICK
109
MANEUVER COMMAND SCALE FACTOR
111
ACCELERATION LIMIT
113
- ACCELERATION FEED FOWARD
θ FF1
LONGITUDINAL ACCELERATION COMMAND
LATERAL ACCELERATION COMMAND
115
T
N
E
Ψ
117
119
121
T^{-1}
123
POSITION COMPUTATION
VXCP
125
31
X FIRE CONTROL
127
129
DISPLACEMENT VELOCITY LOOP GAIN
131
INTEGRAL VELOCITY LOOP GAIN
133
135
θ CV
LONGITUDINAL VELOCITY MEASUREMENT
LONGITUDINAL VELOCITY COMMAND
LATERAL VELOCITY COMMAND
T-
COS Ψ
SIN Ψ
-SIN Ψ
COS Ψ

FIG. 3

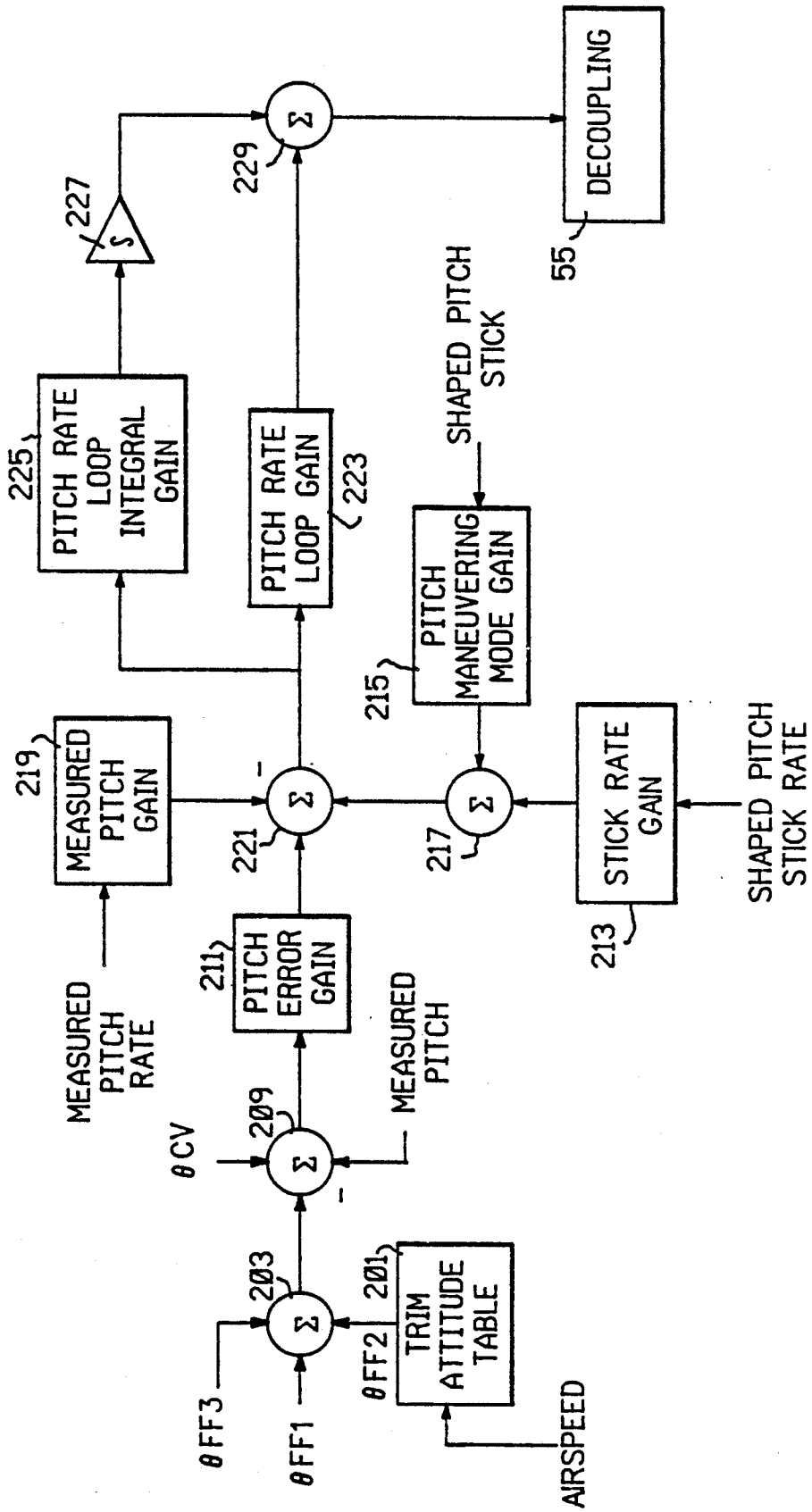
θFF3
θFF1
203
Σ
θFF2
201
TRIM ATTITUDE TABLE
AIRSPEED
θCV
209
Σ
MEASURED PITCH
211
PITCH ERROR GAIN
MEASURED PITCH RATE
219
MEASURED PITCH GAIN
221
Σ
217
Σ
STICK RATE GAIN
213
SHAPED PITCH STICK RATE
215
PITCH MANEUVERING MODE GAIN
SHAPED PITCH STICK
PITCH RATE LOOP GAIN
223
225
PITCH RATE LOOP INTEGRAL GAIN
227
S
229
Σ
DECOUPLING
55

FIG.4

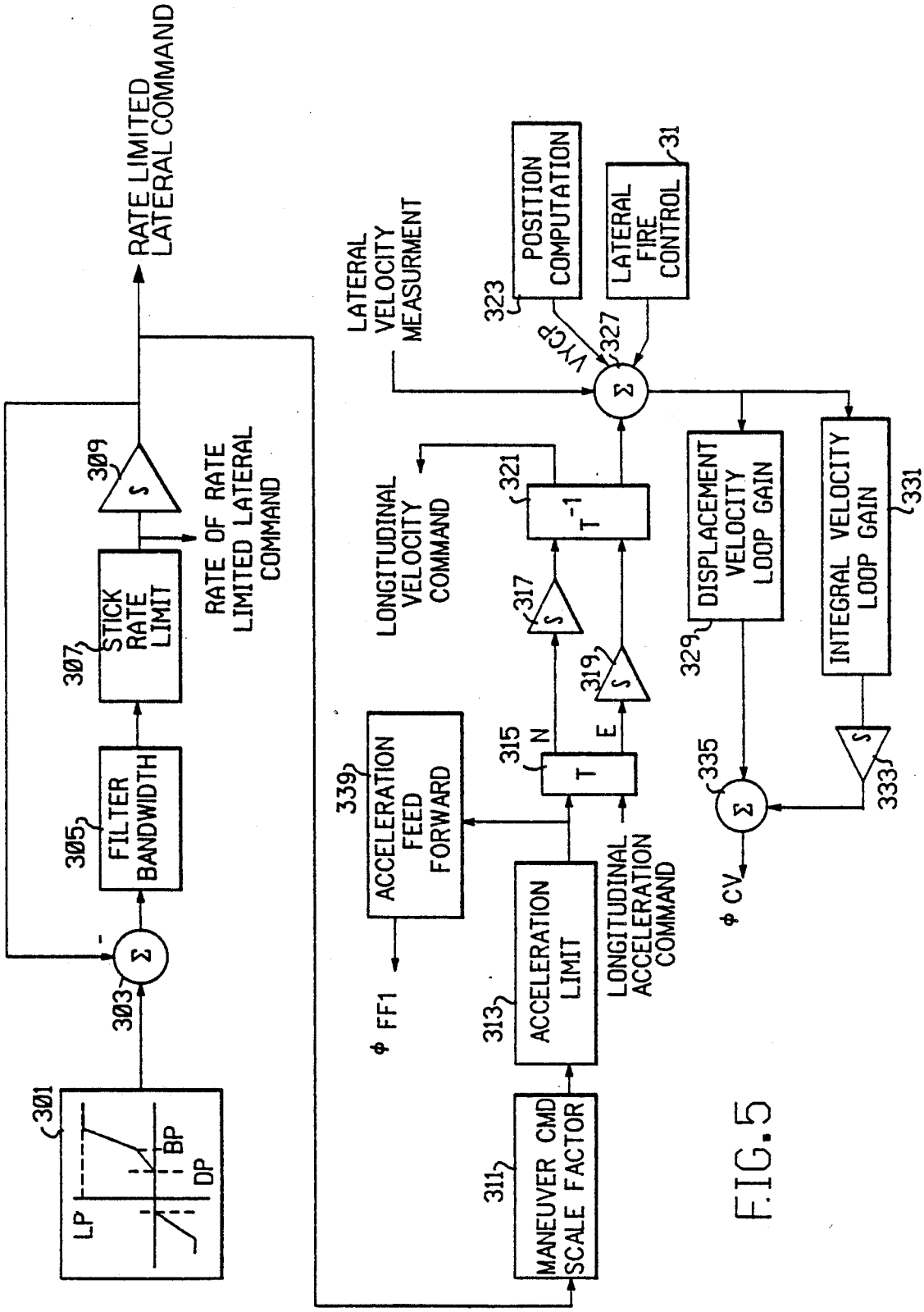
RATE LIMITED LATERAL COMMAND
RATE OF RATE LIMITED LATERAL COMMAND
309
S
STICK RATE LIMIT
307
FILTER BANDWIDTH
305
Σ
303
301
LP
BP
DP
LATERAL VELOCITY MEASURMENT
POSITION COMPUTATION
323
LATERAL FIRE CONTROL
31
VYC
327
Σ
LONGITUDINAL VELOCITY COMMAND
321
T-1
317
S
319
S
DISPLACEMENT VELOCITY LOOP GAIN
329
INTEGRAL VELOCITY LOOP GAIN
331
ACCELERATION FEED FORWARD
339
315
N
T
E
335
Σ
333
S
ACCELERATION LIMIT
313
LONGITUDINAL ACCELERATION COMMAND
φ FF1
φ CV
MANEUVER CMD SCALE FACTOR
311

FIG. 5

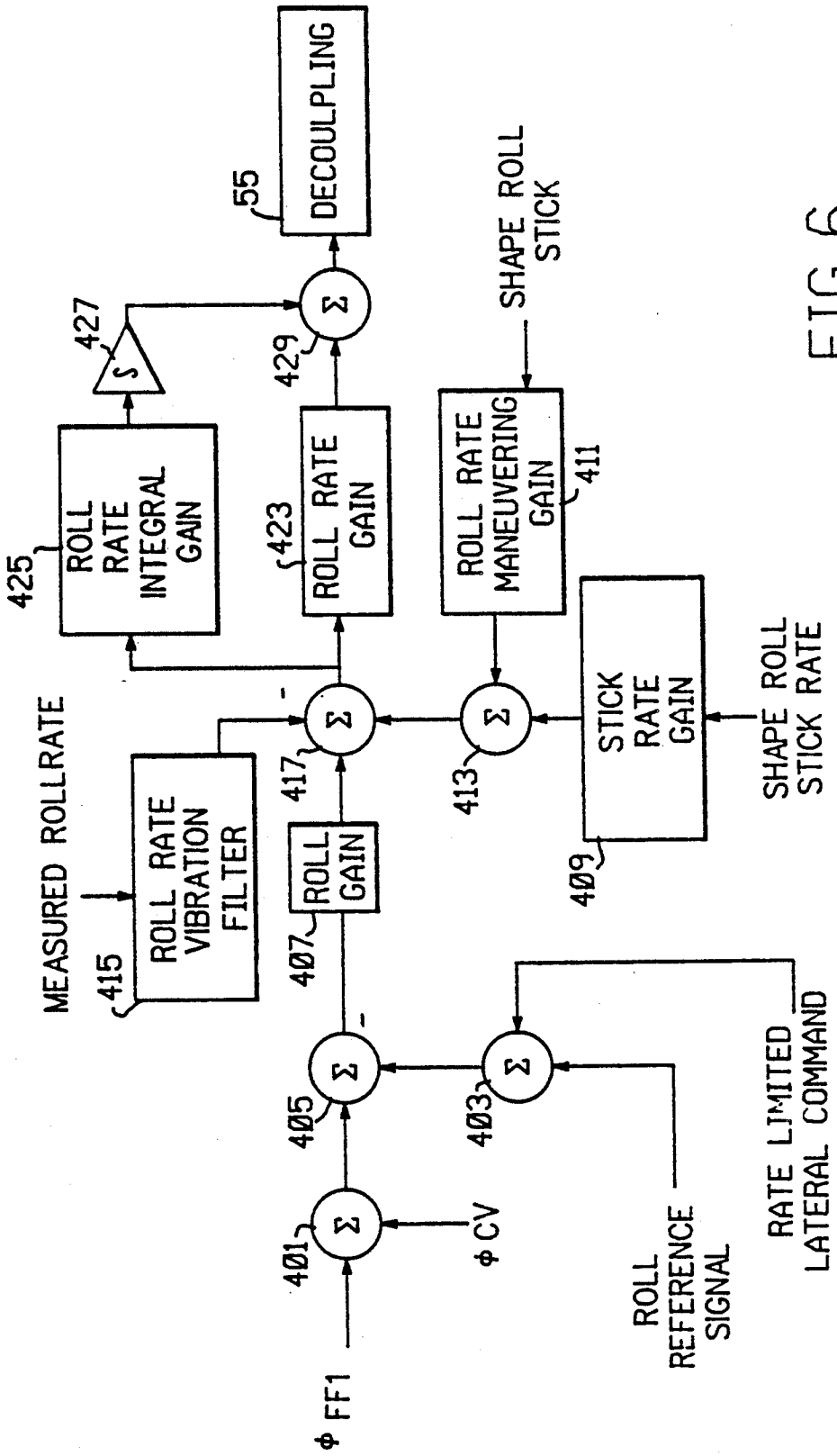
DECOULPLING
55
427
429
SHAPE ROLL STICK
ROLL RATE INTEGRAL GAIN
425
ROLL RATE GAIN
423
ROLL RATE MANEUVERING GAIN
411
MEASURED ROLLRATE
ROLL RATE VIBRATION FILTER
415
417
413
STICK RATE GAIN
409
SHAPE ROLL STICK RATE
ROLL GAIN
407
405
403
401
φ FF1
φ CV
ROLL REFERENCE SIGNAL
RATE LIMITED LATERAL COMMAND

FIG. 6

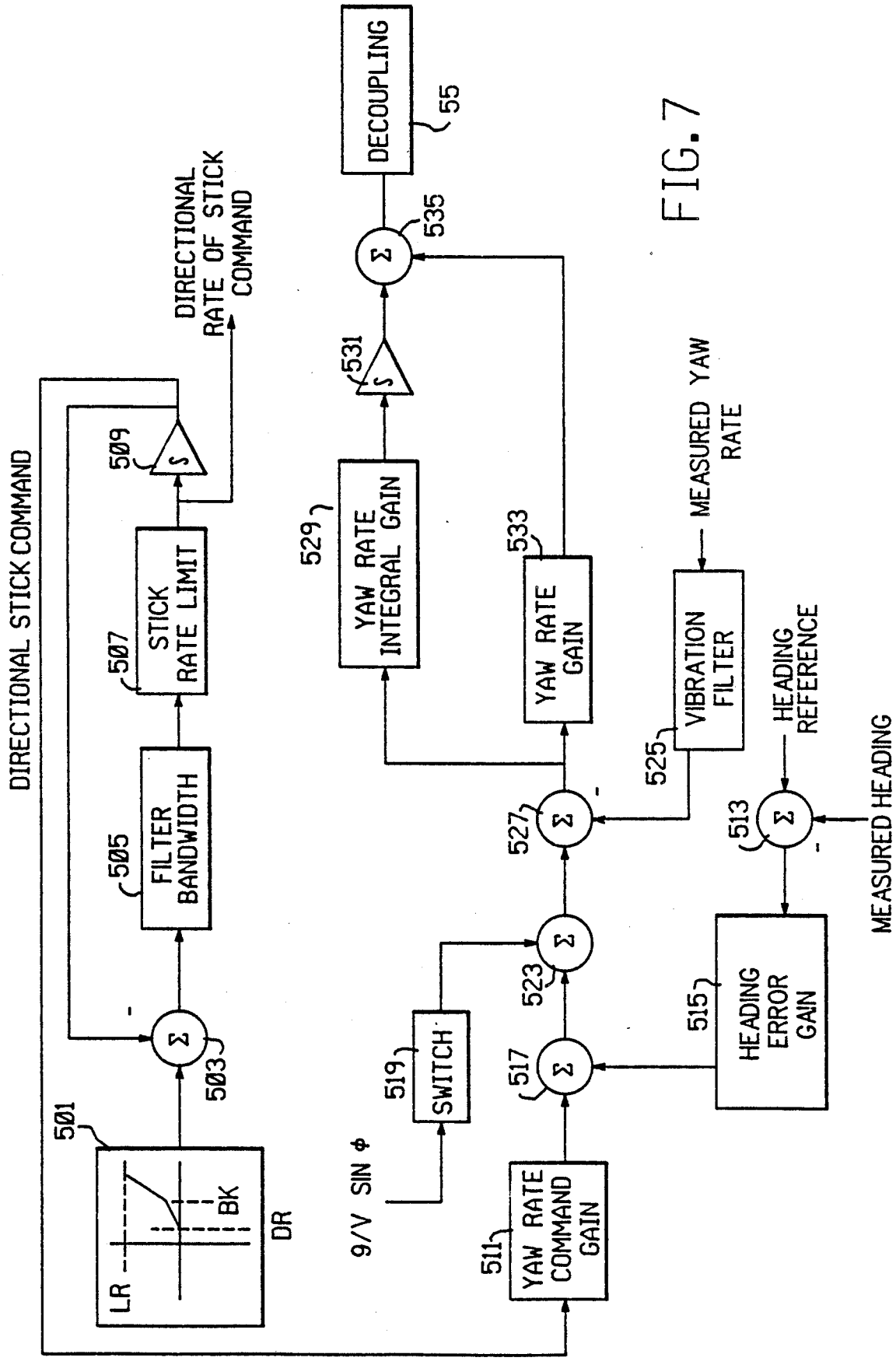
DIRECTIONAL STICK COMMAND
501
LR
BK
DR
503
Σ
505
FILTER BANDWIDTH
507
STICK RATE LIMIT
509
S
DIRECTIONAL RATE OF STICK COMMAND
9/V SIN Φ
519
SWITCH
511
YAW RATE COMMAND GAIN
517
Σ
523
Σ
527
Σ
529
YAW RATE INTEGRAL GAIN
531
S
535
Σ
DECOUPLING
55
533
YAW RATE GAIN
525
VIBRATION FILTER
MEASURED YAW RATE
515
HEADING ERROR GAIN
513
Σ
HEADING REFERENCE
MEASURED HEADING

FIG. 7

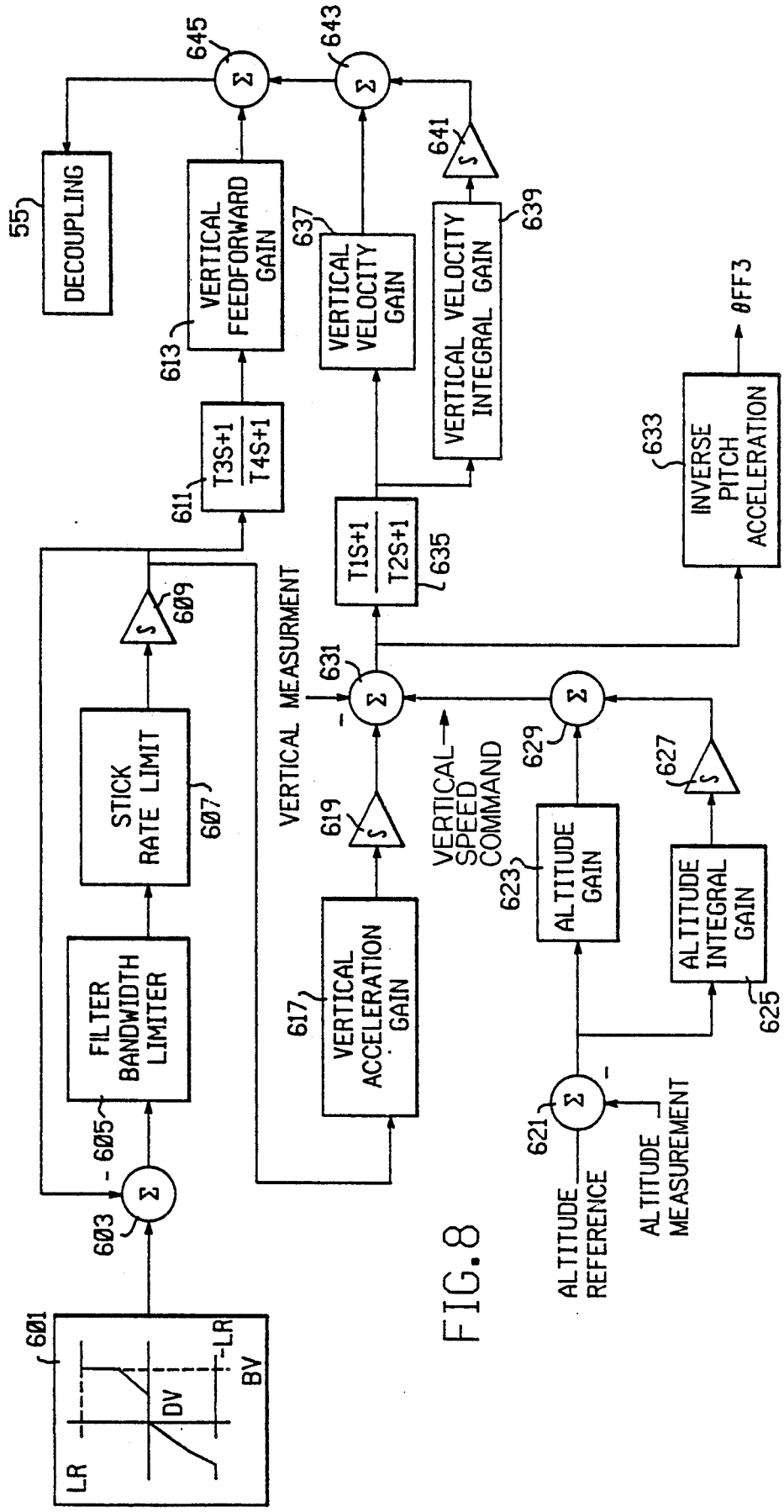
601
LR
DV
-LR
BV
603
605
FILTER BANDWIDTH LIMITER
607
STICK RATE LIMIT
609
611
T3S+1
T4S+1
613
VERTICAL FEEDFORWARD GAIN
55
DECOUPLING
645
643
637
VERTICAL VELOCITY GAIN
641
639
VERTICAL VELOCITY INTEGRAL GAIN
635
T1S+1
T2S+1
631
VERTICAL MEASURMENT
619
617
VERTICAL ACCELERATION GAIN
VERTICAL SPEED COMMAND
629
623
ALTITUDE GAIN
627
625
ALTITUDE INTEGRAL GAIN
621
ALTITUDE REFERENCE
ALTITUDE MEASUREMENT
633
INVERSE PITCH ACCELERATION
θFF3

FIG. 8

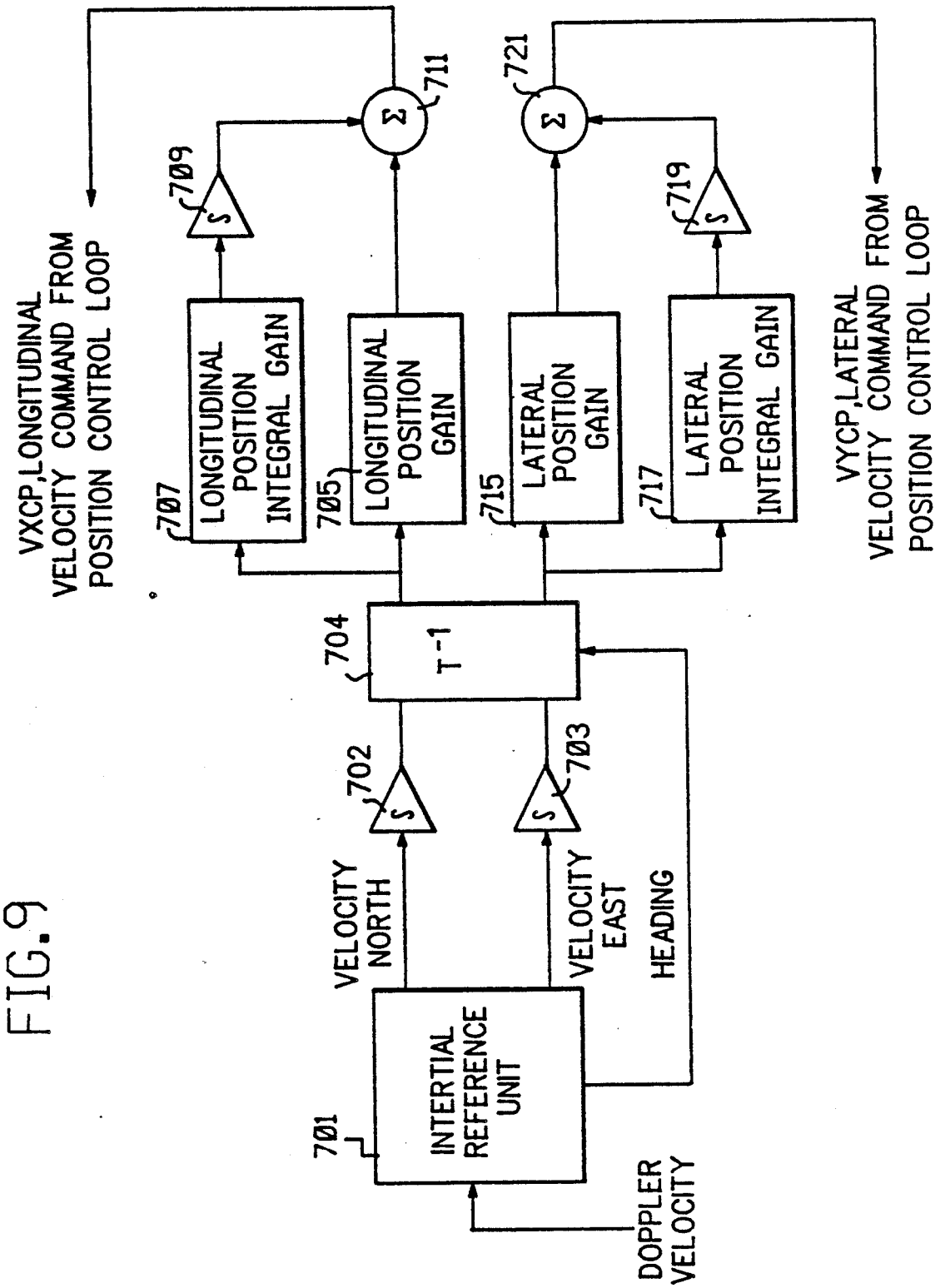
VXCP,LONGITUDINAL VELOCITY COMMAND FROM POSITION CONTROL LOOP
709
711
721
719
LONGITUDINAL POSITION INTEGRAL GAIN
707
LONGITUDINAL POSITION GAIN
705
LATERAL POSITION GAIN
715
LATERAL POSITION INTEGRAL GAIN
717
VYCP,LATERAL VELOCITY COMMAND FROM POSITION CONTROL LOOP
704
T-1
702
703
VELOCITY NORTH
VELOCITY EAST
HEADING
INTERTIAL REFERENCE UNIT
701
DOPPLER VELOCITY

FIG.9

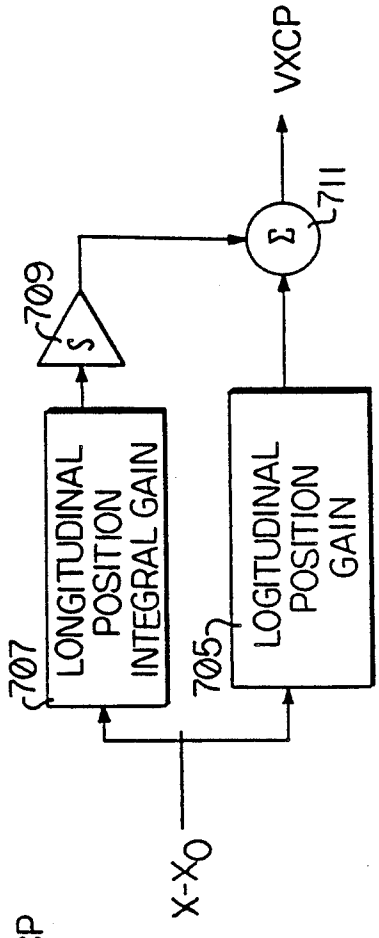

FIG. 10b

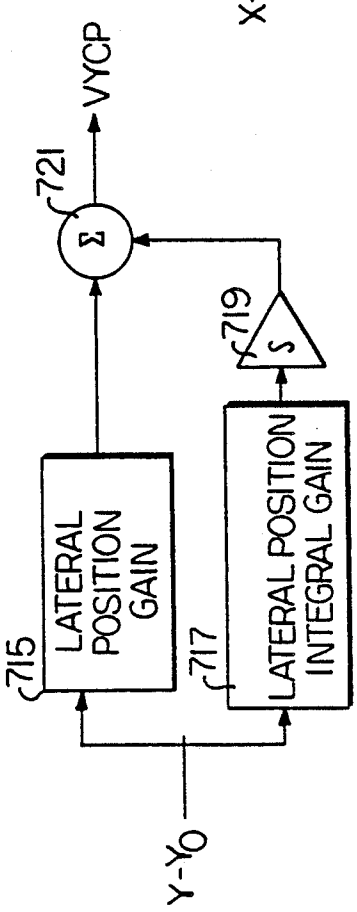

FIG. 10a

AUTOMATED HELICOPTER FLIGHT CONTROL SYSTEM

BACKGROUND OF THE INVENTION

Helicopter type aircraft are known to be aerodynamically unstable. The piloting process for such vehicles involves the active use of both hands and both feet, as well as close attention to the aircraft attitude. The process is especially complicated due to the interrelated nature of the controls. An increase in the pitch of the main rotor causes a twisting of the aircraft which must be corrected for by an adjustment of the tail rotor. In a similar manner, when the pilot desires to perform a single action with the aircraft, he must simultaneously perform a complex, learned series of actions on the controls in order to achieve the single action.

In addition, helicopter type aircraft typically are able to operate closer to the limit of their material strength and limit of their flight envelope. An overstressing of the aircraft can cause mechanical damage. An over specification of a number of flight characteristics can also push the aircraft beyond its limit, or cause none of the characteristics specified to be achieved.

Although there are numerous examples of advancement of the helicopter control art, each typically deals with a narrow problem and its concomitant narrow solution, such as an engine torque limitation which prevents demands on the engine in excess of the torque limit. One reference, U.S. Pat. No. 4,420,808, E. D. Diamond, et al, inventors, discloses the use of a four axis force stick and a trim controller. The 808' patent recites that it has the ability to provide the capability for a pilot to control an aircraft in response to his perception of changes in attitude, altitude, speed, heading and the like, with control inputs provided by the pilot only in the event that a change in aircraft response is required. The system of the 808' patent, then, is a trim system which sets the controls of a helicopter to their last position. This method does not take into account changing conditions such as wind shifts, or aircraft attitude. Under the system of the 808' patent, it is still the responsibility of the pilot to make the minute control changes necessary to keep the aircraft stable, or steady with respect to a fixed point on the ground. The system of the 808' patent was intended primarily to increase cockpit usable space by integrating the controls into a four axis stick with some form of control.

SUMMARY OF THE INVENTION

The present invention is a fully integrated fly-by-wire system for a helicopter utilizing a ground and inertial reference system and automated stability control to enable vectored directional control of the aircraft The system of the present invention corrects for external changes and uses feedforward and feedback prediction to better implement pilot commands. Acceleration commands enable the system to have greater compatibility with basic attitude stabilization loops currently in use.

Control signals are reduced to their force and moment components and then used according to a weighting matrix. All commands are continually modified by constraint feedbacks to thereby adapt limits of torque, rotor RPM and actuator authority performance envelopes. The built-in synchronization structures allow transient free transition into and out of differing control modes. A vertical flight path energy management system takes vertical commands to produce vertical accelerations, using kinetic to potential energy conversions plus power adjustments for larger maneuver requirements.

The system of the present invention is designed to command computed attitude maneuvers which maximize the response obtainable to an acceleration command. This is especially important in helicopter aircraft where the aircraft attitude is a major determiner of the speed and direction of the maneuver. All control and stabilization functions are decoupled so that the pilot is not required to apply compensating controls in any axis orthogonal to the axis in which commands are inserted.

BRIEF DESCRIPTION OF THE DRAWINGS

The structure and method of operation of the invention, together with additional advantages thereof, will be best understood from the following description of specific embodiments when read in connection with the accompanying drawings, in which:

FIG. **1** is an isometric drawing of the control stick which can be utilized to affect command inputs to the system of the present invention;

FIG. **2** is a conceptual block diagram of one axis of the acceleration command control system of the present invention driven by the control stick of FIG. **1**;

FIG. **3** is a block diagram of the pitch control block incorporated into the conceptual block diagram of FIG. **2**;

FIG. **4** is a block diagram of the pitch stabilization control block incorporated into the conceptual block diagram of FIG. **2**;

FIG. **5** is a block diagram of the lateral maneuver control block incorporated into the conceptual block diagram of FIG. **2**;

FIG. **6** is a block diagram of the roll stabilization control block incorporated into the conceptual block diagram of FIG. **2**;

FIG. **7** is a block diagram of the directional stabilization control block;

FIG. **8** is a block diagram of the vertical maneuvering command and stabilization control block;

FIG. **9** is a block diagram of the hover position control block, without hover sensor, incorporated into the conceptual block diagram of FIG. **2**.; and,

FIGS. **10***a* and **10***b* are block diagrams the hover position control block, with hover sensor, incorporated into the conceptual block diagram of FIG. **2**.

DETAILED DESCRIPTION OF THE PREFERRED EMBODIMENTS

Referring to FIG. **1**, a control stick **11** is movably supported by a support **13**. The indicated control movements shown are for vertical, yaw, pitch, and roll, and are indicated by the appropriate directional arrows.

Referring to FIG. **2**, a conceptual control path block diagram for one axis of the system of the present invention is shown. Each of the four control axes is a specific realization of this more general figure. It is understood that the diagrammatic representations illustrated herein may be implemented in a digital or analog fashion Stick inputs from control stick **11** representing vector direction command signals are connected to a gradient and limit control block **21**. Gradient and limit control block **21** provides limits and modifications to signals received from control stick **11** because of the finite performance limits inherent in the control surfaces of a helicopter. In addition to the finite structural limitations which are

constant, a set of limitations due to present operating characteristics, known as performance constraints, are also input into gradient and limit control block **21**.

The output from gradient and limit control block **21** is connected to a non-linear dynamic model block **23**. In this block, the now limited vector direction command signal from the control stick **11** is used to generate three command components. An attitude rate predictor output from block **23** is a signal indicative of how rapidly the attitude of the aircraft has been commanded to change. An acceleration attitude predictor output from block **23** is a signal indicative of the expected attitude change required of the aircraft to achieve the commanded acceleration. The third output from block **23** is an acceleration command signal

The acceleration command signal from block **23** is input into a heading transformation block **24**. The heading transformation block **24** resolves aircraft body axis acceleration commands into an earth referenced coordinate frame.

An integrator **25** receives the output from the heading transformation block **24** and performs an integration to calculate a velocity command signal. The velocity command signal from integrator **25** is inputtably connected to a second coordinate transform block **27**, where the velocity command signal is transformed back into the aircraft body axis coordinate frame. These blocks **24**, **25**, and **27** implement one of the very unique features of the present invention, in that stick commands generate acceleration commands in the aircraft coordinate frame; but the resulting velocity command is maintained in an earth referenced frame.

The velocity command signal is first picked off from heading transformation block **27** and inputtably connected to a trim table block **29**.

Trim table block **29** estimates the aircraft attitudes required to maintain the commanded velocity. The processing of the velocity command signal by trim table block **29** produces an attitude predict signal.

Beneath coordinate transform block **27** is a velocity commands from position hold and fire control system block. This block provides a steadying input to the system based upon the last command of the position hold and fire control system.

Velocity sensors on the aircraft comprise a velocity measurement block **35**. The measured velocity from velocity measurement block **35** is inputtably connected to a velocity estimate filter block **37** in order to reduce any noise or vibration variations in the measured velocity. The negative summing of the output of the velocity estimate filter block **37** with a total velocity command signal creates a velocity error signal.

The velocity command from block **27** is also summed at summing junction **33** with velocity commands from a position hold computation and fire control system block **31** and the output of the velocity estimate filter block **37** to arrive at the total velocity error command.

The velocity error signal from summing junction **33** is connected to the velocity control block **39** which is a proportional plus integral control element. The output of velocity control block **39** is an attitude command signal representing the attitude change required to reduce the velocity error towards zero.

The output from trim tables block **29**, the accelleration attitude predictor from non-linear dynamic model block **23**, and the output of velocity control block **39** are summed in a summing junction **41** to form an attitude reference signal.

The attitude reference signal from summing junction **41** is introduced into a summing junction **43** where it is summed with a signal which is the negative of the attitude from the attitude measurement sensors. This attitude measurement signal is generated from attitude measurement sensors aboard the aircraft (not shown), and is normally provided by standard aircraft attitude instrumentation. The output of summing junction **43** is the attitude error signal.

The attitude error signal from summing junction **43** is fed into a rate command gain block **45**. The gains of the rate command gain block **45** can be varied to affect the desired level of aircraft performance.

A vibration filter block **49** receives an attitude rate measurement signal. The attitude rate measurement signal is also normally provided by standard aircraft attitude instrumentation. The vibration filter block **49** smooths the attitude rate measurement signal to rid it of unwanted vibration to prevent overcontrol. The output of the vibration filter block **49** is negatively summed with the output of the rate command gain block **45** and with the attitude rate predictor signal from dynamic model block **23** in a summing junction **51**.

The output of summing junction **51** is fed to an attitude stabilization control block **53**. A mode control input to attitude stabilization control block **53** selects which control laws are to treat the signal from summing junction **51**. The control laws embodied within attitude stabilization control law block **53** keep track of the physical limits of the aircraft to the extent to which control can be achieved.

The output of the attitude stabilization control law block **53** is fed into a decoupling block **55**. Within decoupling block **55** a decoupling matrix operation is performed to calculate the extent to which each output must be actuated in order to effect the stick inputs. The values used in the decoupling matrix at any one time are a function of the degree of interaction among the controlled outputs, as well as the speed and attitude of the aircraft. The outputs of the decoupling block **55** relate to the traditional helicopter aircraft inputs of collective control, longitudinal cyclic control, lateral cyclic control, and directional control. Typically, the helicopter engine's fuel response to increased collective will be handled in a sub control loop not treated here.

It is well known in the helicopter control field that a movement of one control, such as collective, not only produces an aircraft response in the desired axis, such as vertical, but also produces aircraft responses in other axes, such as yaw, pitch, and roll. In conventional helicopter control systems, the pilot must coordinate all four axes of control to produce a desired single axis response. A feature of the present invention performs that coordination automatically, in large part through the decoupling block **55**, but also through other control feedback elements. Force and moment decoupling is achieved in decoupling block **55** by apportioning each single input to block **55** into all four control surface command outputs. Each output from block **55** drives an actuator, which may be of the electrohydraulic or other type within the scope of the current art. The actuator, in turn, moves the control surface to which it is attached, thereby effecting the commanded helicopter motion.

FIGS. **1** and **2** illustrate the overall scheme of the present invention. The remaining figures are more detailed control logic diagrams illustrating an intermediate level of control complexity and centering on the general types of control each subscheme is to control. It

is understood that each level of control logic is implementable either in analog or digital computer form.

Referring to FIG. 1, the pitch axis is separate and distinct from the other axes pictured. Although the pilot may activate more than one axis at a time, each axis has its own distinct control limitation curve. Referring to FIG. 3, the longitudinal control scheme, a stick shaping block 21, similar to gradient and limit control block 21 of FIG. 2, is shown in the upper left hand corner of FIG. 3.

The stick shaping block 21 shown in FIG. 3 is specific to the longitudinal control function. The graph in the stick shaping block 21 illustrates the signal output vertically as a function of stick position input horizontally. The LQ line represents the output limit of the stick. The DQ zone just to the right of the vertical axis represents the stick deadzone, the range over which the stick may be moved forward and still produce no output. The point BQ on the horizontal axis represents the transition from a second order output between DQ and BQ to a linear output between BQ and LQ. At BQ, the slope of the second order segment exactly equals the slope of the linear segment. The purpose of the stick shaping function is to provide a low stick gain in the region of neutral stick for precise controllability and a high stick gain in the region of large stick forces for maximum aircraft response. The deadzone region DQ is needed to reject inadvertant pilot inputs which may occur when the pilot unintentionally applies a small force in an axis orthogonal to the axis that he intends to command.

The output of stick shaping block 21 is input into a feedback summing junction 101. Summing junction 101 and blocks 103, 105, and 107 together form a rate limited first order log filter on the shaped stick output of block 21. Filter bandwidth block 103 controls the bandwidth of this low pass filter while stick rate limit block 105 controls the maximum rate of change of the shaped pitch stick output of filter bandwidth block 103. The output of maneuver rate command limit block 105 is fed into integrator block 107. One output of stick rate limit block 105 will be subsequently applied to an input shown later. An output from integrator 107 is also picked off and applied to feedback summing junction 101 to complete the filter implementation.

The shaped pitch stick from the output of the integrator 107 is also fed into a maneuver command scale factor block 109. The output from the maneuver command scale factor block 109 is fed into an acceleration limit block 111. The limitations of acceleration limit block 111 placed upon the signal from maneuver command scale factor block 109 are a function of the limitations of the aircraft based upon its current velocity and current pitch position.

The output of acceleration limit block 111 is the longitudinal acceleration command, and is fed into an acceleration feed forward block 113. The acceleration feed forward block has a gain of the 57.3 degrees to radian conversion divided by 32.2 feet/sec^2, the acceleration of gravity and represents the required pitch angle change to achieve the commanded acceleration The sign of the acceleration feed forward block 113 is negative for longitudinal to account for positive (forward) acceleration requiring negative (down) pitch attitude.

The output of acceleration feed forward block 113 is designated θFF1 for reintroduction into another control sequence shown later.

The longitudinal acceleration command output of acceleration limit block 111 is fed into a body orientation block 115. Body orientation block 115 also receives a lateral acceleration command which will be shown later on FIG. 5. The operation carried on within body orientation block 115 is shown in the lower left half of FIG. 3 as a heading rotation matrix to rotate the acceleration command into an earth referenced north/east coordinate frame.

The outputs of the body orientation block 115 include a north acceleration signal and an east acceleration signal The vertical north acceleration signal is fed into an integrator 117. The output of integrator 117 is a north velocity command which results from the integration of the north acceleration signal The east acceleration signal is fed into an integrator 119. The output of integrator 119 is an east velocity command which results from the integration of the east acceleration signal

The east velocity command from integrator 119 and the north velocity command from integrator 117 are rotated back into the body axis frame through an inverse heading rotation matrix block 121. The outputs of block 121 are the longitudinal velocity command and the lateral velocity command.

This rotation, integration, and inverse rotation method allows stick inputs to command body axis accelerations, but the resultant velocity commands are maintained in the earth reference frame. For a helicopter this provides a feature where the aircraft can be turned from its direction of flight to fire at a target, for example, without changing its flight path across the ground.

Above and to the left of the inverse heading rotation block 121 is the position computation block 123. Position computation block 123 receives data from any velocity or position currently available in the instrumentation sensing existing art. Position computation block 123 outputs a longitudinal velocity command which is summmed with the longitudinal velocity command from the fire control system block 31, from FIG. 2, in a summing junction 125. The fire control system block 31 was referred to in FIG. 2, and will not be discussed in greater detail.

The longitudinal velocity is introduced near the bottom right of FIG. 3 and is typically derived from standard inertial, doppler, or other sensors found on aircraft. The longitudinal velocity measurement, the output of summing junction 125, and the longitudinal velocity command velocity commands output of heading rotation block 121 are summed in a summing junction 127 to form a signal indicative of the longitudinal velocity error.

The output of summing junction 127 is fed into the input of a displacement velocity loop gain block 129. The output of summing junction 127 is also fed into the input of an integral velocity loop gain block 131. The output of integral velocity loop gain block 131 is fed into the input of an integrator 133. The output of integrator 133 and the output of displacement velocity loop gain block 129 are summed in a summing junction 135 to form θ_{CV}, the pitch command for velocity loop control.

Referring to FIG. 4, the pitch stabilization control block diagram is shown. A trim attitude table 201 accepts a calibrated airspeed input. This input is normally available from air data equipment typically available on aircraft. The output of trim attitude table block 201 is the second feedforward pitch signal θ_{FF2}. Also shown on FIG. 4 are the first feedforward pitch θ_{FF1} signal

from acceleration feed forward block **113** of FIG. **3** and the third feedforward pitch signal θ_{FF3} which emanates from a control loop to be hereinafter discussed in FIG. **8**. The first, second, and third feedforward pitch commands, θ_{FF1}, θ_{FF2}, and θ_{FF3}, respectively are summed in a summing junction **203**.

Still referring to FIG. **4**, the output of summing junction **203** is summed with θ_{CV} from FIG. **3** at summing junction **209**. Further, the measured pitch attitude is negatively summed with the total pitch command at summing junction **209** to form a pitch error signal. The measured pitch signal is normally obtained from aircraft flight data systems typically present on aircraft. The pitch error signal output of summing junction **209** is fed into a pitch error gain block **211**.

Near the bottom of FIG. **4**, the shaped pitch stick rate quantity from FIG. **3** appears and is fed into a stick rate gain block **213**.

The shaped pitch stick quantity from FIG. **3** also appears and is fed into a pitch rate maneuvering mode gain block **215**. The output of the pitch maneuvering mode gain block **215** is summed with the output of the stick rate gain block **213** in a summing junction **217** to form the total pitch rate command.

The measured pitch rate quantity, normally obtained from aircraft flight data systems typically present on aircraft, is fed into a vibration filter block **219**. The negative of the output of the vibration filter block **219**, the total pitch rate command output of the summing junction **217**, and the output of the pitch error gain block **211** are summed in a summing junction **221**, to produce a pitch rate error signal.

The output of the summing junction **221** is fed into the input of a pitch rate loop gain block **223**. The output of the summing junction **221** is also fed into the input of a pitch rate loop integral gain block **225**. The output of the pitch rate loop integral gain block **225** is fed to an integrator **227**. The output from integrator **227** and the output from pitch rate loop gain block **223** are all summed in a summing junction **229**. The output of summing junction **229** is fed into the decoupling block **55** shown previously on FIG. **1**.

Referring to FIG. **5**, the lateral maneuver block diagram which is very similar to the longitudinal block diagram FIG. **3** is shown. A stick shaping block **301** in the upper left hand portion of FIG. **5** illustrates the signal emanating from the stick of FIG. **1** as it is actuated in its roll axis. The block **301** is analogous to the stick shaping block **21** of FIG. **2**. The block **301** illustrates the extent of the stick limit LP, as well as a stick dead zone DP and a breakpoint BP. The output of stick shaping block **301** is input into a feedback summing junction **303**. Summing junction **303** and blocks **305**, **307**, and **309** together form a rate limited first order log filter on the shaped stick output of block **301**. Filter bandwidth block **305** controls the bandwidth of this low pass filter while stick rate limit block **307** controls the maximum rate of change of the shaped pitch stick output of stick shaping block **301**. One output of stick rate limit block **307** will be subsequently applied to an input shown later. The other output of stick rate limit block **307** is input into an integrator **309**. The output from integrator **309** is picked off and feedback to feedback summing junction **303** to complete the feedback implementation

The rate limited lateral command from the output of the integrator **309** is also fed into a maneuver command scale factor block **311**. The outPut from the maneuver command scale factor block **311** is fed into an acceleration limit block **313**. The limitations of acceleration limit block **313** placed upon the signal from maneuver command scale factor block **311** are a function of the limitations of the aircraft based upon its current velocity and current pitch position.

The lateral acceleration command output of acceleration limit block **313** is fed into a body orientation block **315**. Body orientation block **315** also receives the longitudinal acceleration command which was illustrated on FIG. **3**. The operation carried on within body orientation block **315** was shown in the lower left half of FIG. **3** as a heading rotation matrix to rotate the acceleration command into an earth referenced north/east coordinate frame.

The outputs of the body orientation block **315** include a north acceleration signal and an east acceleration signal. The north acceleration signal is fed into an integrator **317**. The output of integrator **317** is a north velocity command which results from the integration of the north acceleration signal. The east acceleration signal is fed into an integrator **319**. The output of integrator **319** is an east velocity command which results from the integration of the east acceleration signal.

The east velocity command from integrator **319** and the north velocity command from integrator **317** are rotated back into the body axis frame through an inverse heading rotation matrix block **321**. The outputs of block **321** are the longitudinal velocity command and the lateral velocity command.

This rotation, integration, and inverse rotation method allows stick inputs to command body axis accelerations, but the resultant velocity commands are maintained in the earth reference frame. This provides a feature where the aircraft can be turned from its direction of flight to fire at a target, for example, without changing its flight path across the ground.

To the right of the inverse heading rotation block **321** is the position computation block **323**. Position computation block **323** receives data from any velocity or position currently available in the instrumentation sensing existing art. Position computation block **323** outputs a longitudinal velocity command which is summmed with the longitudinal velocity command from the lateral fire control system block **31**, from FIG. **2**, the lateral velocity measurement which is introduced near the right of FIG. **5** and is typically derived from standard inertial, doppler, or other sensors found on aircraft, and the lateral velocity measurement in a summing junction **327**. The fire control system block **31** was referred to in FIG. **2** and will not be discussed in greater detail.

The signal from summing junction **327** forms a signal indicative of the longitudinal velocity error. The output of summing junction **327** is fed into the input of a displacement velocity loop gain block **329**. The output of summing junction **327** is also fed into the input of an integral velocity loop gain block **331**. The output of integral velocity loop gain block **331** is fed into the input of an integrator **333**. The output of integrator **333** and the output of displacement velocitY loop gain block **329** are summed in a summing junction **335** to form θ_{CV}, the pitch command for velocity loop control.

The output of acceleration limit block **313** is the lateral acceleration command and is fed into an acceleration feed forward block **339**. The acceleration feed forward block has a gain of the 57.3 degrees to radian conversion divided by 32.2 feet/sec^2, the acceleration of gravity, and represents the required pitch angle

change to achieve the commanded acceleration. The output of acceleration feedforward block **339** is designated ϕ_{FF1} for reintroduction into another control sequence shown later.

Referring to FIG. **6**, the roll stabilization control diagram is illustrated. A signal ϕ_{FF1} is shown which emanates from acceleration feedforward block **339** of FIG. **5** ϕ_{FF1} is summed with the signal ϕcv from FIG. **5** in a summing junction **401**.

At the bottom left of FIG. **6** a roll reference signal, obtainable from standardized data equipment, is summed with the rate limited lateral command from integrator **309** of FIG. **5** in a summing junction **403**.

The output of summing junction **401** represents the total roll angle command from which is subtracted the measured roll attitude from summing junction **403** at summing junction **405** to produce a roll attitude error signal. The roll attitude error signal is multiplied by the gain from roll gain block **407**.

Referring to the bottom of FIG. **6**, the shaped roll stick rate signal is fed into stick rate gain block **409**. Stick rate gain block **409** amplifies the shaped roll stick rate to provide a shaped roll stick rate from FIG. **5** to provide a roll rate feedforward term.

Referring to the lower right portion of FIG. **6**, the shaped roll stick quantity is input into a roll rate maneuvering gain block **411**. Roll rate maneuvering gain block **411** enables a roll maneuvering mode allowing direct stick command of roll rate instead of lateral acceleration. Mode logic is used to enable or disable block **411**.

The output from stick rate gain block **409** and roll rate maneuvering gain block **411** is summed in a summing junction **413**.

Referring to the top of FIG. **6**, the measured roll rate signal is provided as an input to this system from a standard inertial navigation system or a rate gyro typically found in modern aircraft. Measured roll rate is filtered in roll rate vibration filter block **415**.

The output of summing junction **413**, roll gain block **407**, and the negative of the filtered roll rate from roll rate vibration filter **415** are summed in a summing junction **417** to form a roll rate error signal.

The output of the summing junction **417** is fed into the input of a roll rate gain block **423**. The output of the summing junction **417** is also fed into the input of a roll rate integral gain block **425** The output of the roll rate integral gain block **425** is fed to an integrator **427**.

The output from integrator **427**, and the output from roll rate gain block **423** are summed in a summing junction **429**. The output of summing junction **429** is fed into the decoupling matrix **55** which was also shown previously on FIG.**1**.

Referring to FIG. **7**, the directional stabilization control block diagram is illustrated. A stick shaping block **501** in the upper left hand portion of FIG. **7** illustrates the signal emanating from the stick of FIG. **1** as it is actuated in its directional orientation axis. The output from stick shaping block **501** is input to the stick filter comprised of blocks **503**, **505**, **507**, and **509**

The block **501** illustrates the extent of the stick limits from LR to zero, as well as a stick dead zone DR, and stick break point BK. The output of the gradient and limit control block **501** is fed into a feedback summing junction **503**. The output of feedback summing junction **503** is fed into a filter bandwidth block **505**. Filter bandwidth block **505** filters out the small transients in the signal due to vibrations in the aircraft and its effect on the pilot's hand as stick **11** of FIG. **1** is actuated.

The output of filter bandwidth block **505** is fed into a stick rate limit block **507**. The output of the stick rate limit block **507** is the directional rate of stick command, and is in the form for introduction in subsequent figures. The output of the stick rate limit block **507** is fed into an integrator **509**. The output of integrator **509** is the directional stick command. The output of integrator **509** is fed back into summing junction **501**. The filtered directional stick command output of integrator **509** is fed into a yaw rate command gain block **511**.

Near the bottom of FIG. **7** are a heading reference signal and a measured heading signal which are summed in a summing junction **513**. The output of summing junction **513** is fed into a heading error gain block **515**. Heading hold is triggered when the shaped directional stick command from block **509** is zero. When the stick command is non-zero, the heading reference is synchronized to the measured heading. When the stick command is zero, this synchronization stops, thereby forming a heading error signal at summing junction **513** The heading error gain block **515** is summed with the yaw rate command from block **511** at summing junction **517**.

Above summing junction **517** a turn coordination term, $g/v \sin \phi$ is fed into a switch block **519**. At higher speeds, switch **519** enables a turn coordination signal which sums with the output of summing junction **517** at summing junction **523** to produce the total yaw rate command. The turn coordination term is the predicted body axis yaw rate required to maintain a zero lateral acceleration, and is computed as g, the acceleration of gravity, divided by v, the forward velocity, and multiPlied by the sine of ϕ, the roll angle.

The measured Yaw rate signal appears near the bottom right of FIG. **7** and is fed into a vibration filter block **525** and then negatively summed with the yaw rate command output of summing junction **523** at summing junction **527**.

The output from summing junction **527** is fed into a yaw rate integral gain block **529**. The output of directional control yaw rate integral gain block **529** is fed into an integrator **531**. The output from summing junction **527** is also fed into a yaw rate gain block **533**.

The output of yaw rate gain block **533** and the output of integrator **531** are fed into a summing junction **535**. The output of summing junction **535** is fed directly into the decoupling block **55**, as was previously shown in FIGS. **2**, **4** and **6**.

Referring to FIG. **8**, the vertical maneuvering command stabilization diagram is illustrated. A stick shaping block **601** in the upper left hand portion of FIG. **8** receives the signal emanating from the stick of FIG. **1** as it is actuated in its vertical axis. The output from stick shaping block **601** is input to the stick filter comprised of blocks **603**, **605**, **607**, and **609**.

The block **601** illustrates the extent of the stick limits from LR to −LR, as well as a stick dead zone DV, and stick break point BV. The output of the gradient and limit control block **601** is fed into a feedback summing junction **603**. The output of feedback summing junction **603** is fed into a filter bandwidth block **605**. Filter bandwidth block **605** filters out the small transients in the signal due to vibrations in the aircraft and its effect on the pilot's hand as stick **11** of FIG. **1** is actuated.

The output of filter bandwidth block **605** is fed into a stick rate limit block **607**. The output of the stick rate limit block **607** is fed into an integrator **609**. The output of integrator **609** is fed back into summing junction **601**.

The shaped and filtered vertical stick output from integrator **609** is converted into a vertical acceleration command through a vertical acceleration gain block **617** and then into a vertical velocity command through an integrator block **619**. When the vertical velocity has been commanded below a threshold, integrator block **619** is synchronized to zero velocity command and altitude reference, which is synchronized to the altitude measurement when the vertical speed command is greater than the threshold.

Near the left lower portion of FIG. **8**, an attitude reference signal and an altitude measurement signal are input into a summing junction **621**. The altitude measurement is subtracted from the altitude reference at summing junction **621** to form an altitude error signal. The altitude error signal from summing junction **621** is applied to an altitude gain block **623** and also to an altitude integral gain block **625**. The output of altitude integral gain block **625** is integrated through an integrator **627** to remove any steady-state altitude error. The output of integrator **627** is summed with the proportional term from block **623** at summing junction **629** to form a vertical speed command due to an altitude error. A vertical measurement signal is located atop integrator **619**. The vertical speed command due to an altitude error from summing junction **629** is summed with the vertical speed command from integrator **619** and the negative of the vertical speed measurement at summing junction **631** to form a vertical speed error signal.

The vertical speed error signal is input to inverse pitch acceleration block **633** which is the inverse of the pitch attitude to vertical acceleration model, to form a pitch attitude command θ_{FF3} which is an input appearing at FIG. **4**. The pitch attitude to vertical acceleration model is a control relationship between the effect which pitch attitude has upon vertical acceleration. The vertical speed error signal is also input to a lead/lag compensation circuit **635** to increase phase margin in the vertical speed control loop. The output of block **635** is input to a vertical velocity gain block **637** and also to a vertical velocity integral gain block **639**. The output of vertical velocity integral gain block **639** is integrated through an integrator **641** to remove any steady-state vertical speed error. The output of integrator **641** is summed with the proportional term from block **637** at summing junction **643** to form a vertical acceleration command due to vertical speed error.

The shaped and filtered vertical stick output of integrator **609** is also input into a lead/lag block **611** to provide a command feedforward for faster vertical response to stick inputs. The output of lead/lag block **611** is input to a vertical feedforward gain block **613** which is then summed with the vertical acceleration command from summing junction **643** at summing junction **645** to form a total vertical acceleration command signal.

The output of summing junction **645** is fed into decoupling block **55**, the same decoupling block **55** as was previously illustrated in FIGS. **2**, **4**, **6**, and **7**.

Referring to FIG. **9**, the hover hold position control computation without hover sensor is shown. At the left side of FIG.**9**, a doppler velocity input signal, potentially available from a ground reference radar unit (not shown), is fed into an inertial reference unit **701**. A velocity north signal, a velocity east signal and a heading signal are generated by inertial reference unit **701**.

The north and east velocity signals are integrated at integrators **702** and **703**, respectively, to form north and east position errors. The two integrators **702** and **703** are synchronized to zero when position hold is not engaged. Position hold is engaged when longitudinal and lateral stick forces are both zero and the vector sum of longitudinal and lateral velocity commands is less than a prespecified velocity, in knots.

The north and east position error components are rotated into the aircraft body axes through the heading rotation block **704** to form longitudinal and lateral position error components. Each of these components are input to proportional plus integral controllers to produce velocity commands to maintain a zero position error and therefore hold position. The longitudinal axis position controller is embodied in longitudinal position gain block **705**, longitudinal position integral gain block **707**, integrator block **709** and summing junction block **711**. The longitudinal velocity command from position control loop signal, VXCP, the output of summing junction **711**, is an input to FIG. **3**, shown on FIG. **3** as emanating from position computation block **123**. The lateral axis position controller is embodied in lateral position gain block **715**, lateral position integral gain block **717**, integrator block **719** and summing junction block **721**. The lateral velocity command from position control loop signal, VYCP, the output of summing junction **721**, is an output to FIG. **5**, shown emanating from position computation block **323**.

Referring to FIGS. **10***a* and **10***b*, the hover hold position control computation without hover sensor is illustrated as an alternative means of determine position error.

A hover sensor is a subsystem on a helicopter that outputs longitudinal (X-Xo) and lateral (Y-Yo) position errors from a reference position. These error signals are inputs to the position controllers in FIGS. **10***a* and **10***b*.

The longitudinal position error (X-Xo) is input to the longitudinal position gain block **705** and to longitudinal position integral gain block **707**, the output of which is integrated in integrator block **711**. Summing junction **711** computes a longitudinal velocity command signal as the sum of the output of block **705** and block **709**. VXCP, the output of summing junction **711**, is an input to FIG. **3**.

The lateral position error (Y-Yo) is input to the lateral position gain block **715** and to lateral position integral gain block **717**, the output of which is integrated in integrator block **719**. Summing junction **721** computes a lateral velocity command signal as the sum of the output of block **715** and block **719**. VYCP, the output of summing junction **721**, is an input to FIG. **5**.

The description thus far has been in terms of analog controls and utilizing analog control symbology. Since control schemes are themselves a process, the operation of the present invention is embodied in the control schematics and figures illustrating it. The blocks of the control diagrams employ suitable gains, limits and integrating characteristics, and the summing of analog voltages to drive the relevant aircraft systems. However, the invention is practicable in a digital computer. Indeed, the best mode of implementation is in a digital computer. To practice the invention in aircraft utilizing computers, the voltage output of stick **11** of FIG. **1** would be accessed through various multiplexed inputs to the analog to digital converters and other electronic equipment to enable the proper accessing of input and output devices.

Signal processing may be accomplished by means of a table look up for constants followed by calculations

using those constants or by computation of the constants using algorithms. The digital techniques required for implementing the various control functions shown herein are known, being currently utilized in various systems for piecemeal simplistic control for simple subsystems on aircraft of various types.

The invention is readily used with any suite of aircraft instrumentation existing in the current art, and indeed many of the inputs of the present invention may emanate from such systems. Since the present invention is best implemented digitally, the inputs from the aircraft sensor systems can be flexibly handled in utilizing their inputs into the system of the present invention.

The present invention has been described in terms of helicopters, and the control system of the present invention is especially well fitted to helicopter applications. However, the principles embodied herein are equally applicable to control systems utilized for fixed wing aircraft. In the case of a fixed wing aircraft, the pitch command would control the elevator of a fixed wing aircraft, the roll command would control the ailerons, and the yaw axis would control the rudder. The vertical axis could be used to control lift or power.

The forgoing disclosure and description of the invention are illustrative and explanatory thereof, and various changes in the gains, constants, and types of control,- (e.g. electrical, mechanical, pneumatic, etc.) as well as in the details of the illustrated schematic may be made without departing from the spirit and scope of the invention.

We claim:

1. In an aircraft having control surfaces, an apparatus for controlling the velocity vector of said aircraft comprising:

input means for inputting a signal indicative of desired flight performance;

stabilization means for maintaining the velocity and orientation of said aircraft in the absence of input from said input means; and,

decoupling means, connected to said input means and said means for maintaining the velocity and orientation, for generating a complex set of signals to said aircraft's control surfaces, to produce an aircraft motion only in the desired direction of flight, and wherein said decoupling means further comprises a matrix of coefficients which transform a commanded change in aircraft velocity in one direction into affirmative and compensating commands to said aircraft control surfaces to effect said change in aircraft velocity in one direction.

2. The apparatus for controlling the velocity vector of an aircraft as recited in claim 1 wherein said matrix of coefficients are representative of the state variables of said aircraft.

3. In an aircraft having control surfaces, an apparatus for controlling the velocity vector of said aircraft comprising:

input means for inputting a signal indicative of desired flight performance;

stabilization means for maintaining the velocity and orientation of said aircraft in the absence of input from said input means;

decoupling means, connected to said input means and said means for maintaining the velocity and orientation, for generating a complex set of signals to said aircraft's control surfaces, to produce an aircraft motion only in the desired direction of flight; and,

sensor means, connected to said decoupling means, for providing compensating inputs to said decoupling means based upon the state of said aircraft.

4. The apparatus for controlling the velocity vector of an aircraft as recited in claim 3 wherein said sensor means senses the aircraft angular rate, inertial velocity, and attitude.

5. In an aircraft having contorl surfaces, an appartaus for controlilng the velocity vector of said aircraft comprising:

input means for inputting a signal indicative of desired flight performance;

stabilization means for maintianing the velocity and orientation of said aircraft in the absence of input from said onput means; p1 decoupling means, connected to said input means and said means for maintaining the velocity and orientation, for generating a complex set of signals to said aircraft's control surfaces, to produce an aircraft motion only in the desired direction of flight; and,

standard air data instrumentation connected to said decoupling means.

6. In an aircraft having control surfaces, an apparatus for controlling the velocity vector of said aircraft comprising:

input means for inputting a signal indicative of desired flight performance:

stabilization means for maintaining the velocity and orientation of said aircraft in the absence of input from said input means, wherein said stabilization means further comprises:

sensing means for detecting aircraft inertial rate, aircraft attitude and aircraft velocity; and,

means for computing aircraft control and stabilization response, connected to said sensing means, using said input means, aircraft inertial rate, aircraft attitude and aircraft velocity; and,

decoupling means, connected to said input means and said means for maintaining the velocity and orientation, for generating a complex set of signals to said aircraft's control surfaces, to produce an aircraft motion only in the desired direction of flight.

7. The apparatus for controlling the velocity vector of an aircraft as recited in claim 6 wherein said sensing means further comprises:

doppler radar sensor means for directing aircraft motion relative to any reference; and,

inertial sensor means for detecting accellerational movement of said aircraft.

8. An apparatus for computing the control surface actuation commands for the control surface of an aircraft for forward and lateral acceleration commands, comprising:

lateral command input means for inputting the desired amount of lateral movement said aircraft is to assume;

forward command input means for inputting the desired amount of forward movement said aircraft is to assume;

pitch change signal means for generating a signal indicative of the change in the pitch of said aircraft;

roll attitude signal means for generating a signal indicative of the change in the roll of said aircraft;

integration means, connected to said lateral command input means and said forward command input means, for integrating said commands;

filtration means, connected to said pitch change signal means and said roll attitude signal means, for filtering said signals;

means for measuring the rate of change of said commands; and,

decoupling means, connected to said filtration means, said integration means and said means for measuring the rate of change of said commands, for generating a complex set of signals to said aircraft's control surfaces, to produce an aircraft motion only in the desired direction of flight.

9. An apparatus for computing the control surface actuation commands for an aircraft for vertical acceleration commands, comprising:

vertical command input means for inputting the desired amount of vertical movement said aircraft is to assume and outputting a vertical command signal;

filter means, connected to said vertical command input means for filtering said vertical command signal;

integration means, connected to said filter means, for integrating said vertical command signal;

comparator means, connected to said integration means, for comparing the difference between the integrated vertical command signal and a signal indicative of said aircraft's vertical velocity, and generating an error signal indicative of said comparison;

decoupling means connected to said comparator means, for generating a complex set of signals to the interrelated direct controls of said aircraft to produce acceleration in the desired direction of flight;

controller means, connected to said decoupling means, for actuating the control surfaces of said aircraft, in response to said complex set of signals, to effect vertical acceleration without significant changes in other aircraft flight characteristics.

10. The process of controlling an aircraft comprising the steps of:

commanding a change in velocity in at least one direction;

sensing the aircrafts current speed and orientation parameters;

processing said commanded change based upon the physical limitations of said aircraft and said sensed parameters to form a limited commanded change;

decoupling said commanded change into the constituent commands for each control surface necessary to effect said commanded change; and,

actuating the control surfaces of an aircraft with said constituent commands.

11. The process of controlling an aircraft according to the steps of claim **10** and further comprising the steps of:

sensing the aircraft velocity;

setting the velocity command vector to zero when aircraft velocity has reached a threshold near zero and no affirmative changes in velocity are commanded, in order to fix the aircraft's position.

12. The process of controlling an aircraft according to the steps of claim **10** and further comprising the stePs of:

sensing the aircraft velocity;

disengaging a turn coordination sequence when aircraft velocity falls below a speed threshold, in order to bypass eliminate the unnecessary turn coordination calculations when the aircraft is traveling at low speeds.

13. The process of claim **10** wherein said physical limitations of said aircraft comprise the kinetic energy available to the aircraft.

14. The process of claim **10** wherein said commanded change is transmitted by means of a command signal and said processing step further comprises the steps of:

limiting said command signal based upon the performance constraints of said aircraft;

filtering said command signal to remove unwanted transients;

summing said command signal with a trim signal representing earlier command signals; and,

decoupling said command signal into a multiplicity of affirmative and compensating signals for each of the control surfaces of said aircraft to be affected by said command signal.

15. The process of claim **14** further comprising the step of actuating the control surfaces of said aircraft with said multiplicity of affirmative and compensating signals.

16. The process of claim **10** wherein said steps are performed using a digital computer.

17. The process of controlling a rotor wing aircraft comprising the steps of:

receiving an input velocity vector command;

computing the required change in pitch to implement said input velocity vector command;

computing the required change in roll to implement said input velocity vector command;

computing the required change in directional orientation to implement said input velocity vector command;

computing the required change in vertical acceleration to implement said input velocity vector command;

decoupling said computed required changes into a multiplicity of affirmative and compensating signals for each of the control surface inputs of said rotor wing aircraft, comprising the main rotor collective, the main rotor longitudinal cyclic, the main rotor lateral cyclic and the tail rotor collective.

18. The process of claim **17** wherein said steps are performed using a digital computer.

19. An apparatus for controlling attitudes, attitude rates, heading, heading rate, velocity vector and rate of change of velocity vector of an aircraft having controllable aerodynamic surfaces comprising:

means for inputting a signal, from a pilot's compliant control stick, which will effect various types of aircraft performance;

stabilization means for maintaining the velocity vector of the aircraft with respect to an earth fixed coordinate frame and the heating of the aircraft with respect to that velocity vector; and,

decoupling means, connected to said means for inputting and said stabilization means, for actuating controls in all four axes of an aircraft such that aircraft velocity vector changes occur only in the controller/manipulator axis receiving a pilot input to thereby preclude the need for the pilot multi-axis control inputs to compensate for inherent aircraft coupling.

20. The apparatus described in claim **19**, wherein said stabilization means further comprises:

means for detecting that the velocity vector reaches a threshold near zero;

means for automatically transitioning to a hover position hold control mode in response to said detection;

means for automatically latching a three dimensional hover position reference in response to the velocity vector further reaching a threshold near zero, which may be smaller than the transition threshold; and,

means for automatically controlling the aircraft to hold said hover position reference by generating velocity commands in three orthogonal axes in response to position errors relative to said reference, and wherein said means for detecting, said means for automatically transitioning, said means for automatically latching, and said means for automatically controlling, are all connected to said decoupling means.

21. An apparatus for responding to a vertical control stick input which will cause a vertical acceleration proportional to control stick vertical deflection and to applied force in the vertical direction comprising:

stabilization means for maintaining the aircraft's flight path angle in the absence of vertical control stick input; and, stabilization means for maintaining the aircraft's flight path angle during forward velocity changes via input from angular deflections of the control stick, wherein the vertical acceleration and flight path angle is controlled via a combination of aircraft pitch control and power control, and wherein the flight path angle changes are primarily caused by pitch changes at higher speeds and by power changes at lower speeds, and further comprising:

means for automatically controlling forward speed adjustment range to produce a speed adjustment range which varies from greater speed changes at higher speed to zero speed change as the aircraft approaches hover; and,

pilot speed adjustment range control means for further reducing the amount of forward speed change allowed by the automatic control, said means for automatically controlling and said pilot speed adjustment range control means connected to said stabilization means.

* * * * *