US008332082B2

(12) **United States Patent**
Christensen et al.

(10) **Patent No.: US 8,332,082 B2**
(45) **Date of Patent: Dec. 11, 2012**

(54) **FLIGHT CONTROL LAWS FOR CONSTANT VECTOR FLAT TURNS**

(75) Inventors: **Kevin Thomas Christensen**, Plano, TX (US); **Shyhpyng Jack Shue**, Grapevine, TX (US); **Troy Sheldon Caudill**, Burleson, TX (US)

(73) Assignee: **Textron Innovations Inc.**, Providence, RI (US)

(*) Notice: Subject to any disclaimer, the term of this patent is extended or adjusted under 35 U.S.C. 154(b) by 0 days.

(21) Appl. No.: **13/391,522**

(22) PCT Filed: **Mar. 30, 2011**

(86) PCT No.: **PCT/US2011/030498**

§ 371 (c)(1),
(2), (4) Date: **Feb. 21, 2012**

(65) **Prior Publication Data**

US 2012/0253558 A1 Oct. 4, 2012

(51) **Int. Cl.**
G05D 1/08 (2006.01)
G06F 7/00 (2006.01)

(52) **U.S. Cl.** **701/3**; 701/4; 701/14; 244/180; 340/979

(58) **Field of Classification Search** 701/3, 4, 701/7, 10, 14; 340/979; 244/180, 181, 197, 244/230

See application file for complete search history.

(56) **References Cited**

U.S. PATENT DOCUMENTS

2003/0191561 A1 10/2003 Vos
2006/0186261 A1 * 8/2006 Unzicker 244/12.1
2008/0234881 A1 * 9/2008 Cherepinsky et al. 701/7
2010/0308178 A1 * 12/2010 Gemmati et al. 244/230

FOREIGN PATENT DOCUMENTS

WO 2007018572 A2 2/2007

OTHER PUBLICATIONS

International Search Report and the Written Opinion of the International Searching Authority mailed by ISA/USA, U.S. Patent and Trademark Office on Aug. 26, 2011 for corresponding International Patent Application No. PCT/US2011/030498, 7 pages.

* cited by examiner

Primary Examiner — Tan Q Nguyen
(74) *Attorney, Agent, or Firm* — James E. Walton; Richard G. Eldredge

(57) **ABSTRACT**

An aircraft and method to control flat yawing turns of the aircraft while maintaining a constant vector across a ground surface. The aircraft includes a control system in data communication with control actuators, a lateral control architecture, a longitudinal control architecture, and an initialization command logic. The lateral control architecture controls the aircraft in the lateral direction, while the longitudinal control architecture controls the aircraft in the longitudinal direction. The initialization command logic automatically activates the lateral control architecture and the longitudinal control architecture to maintain a constant vector across the ground whenever a directional control input is made at low speed.

20 Claims, 9 Drawing Sheets

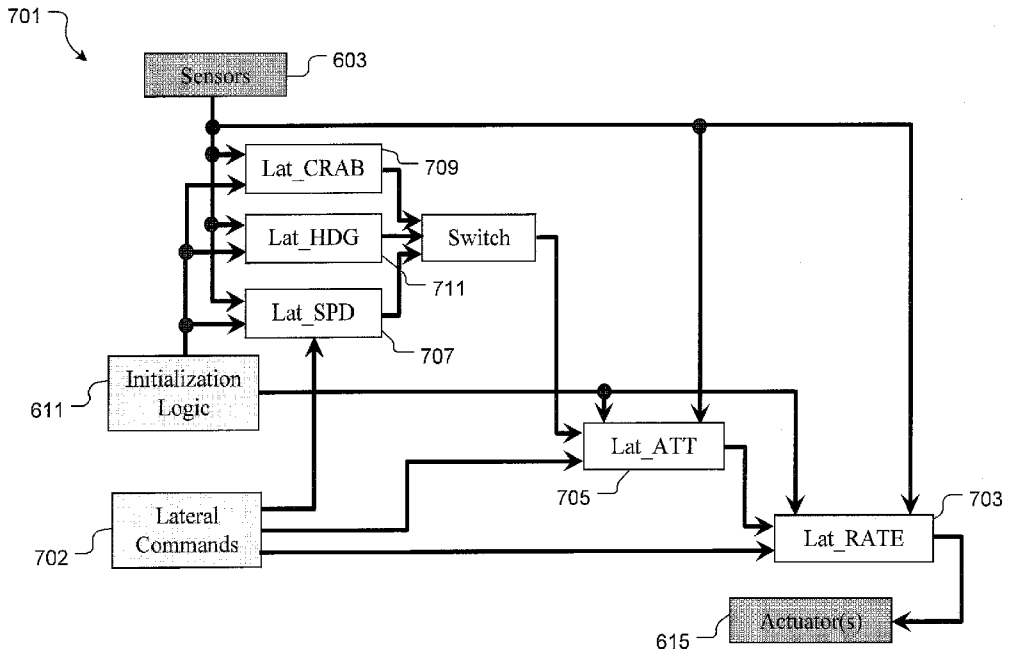

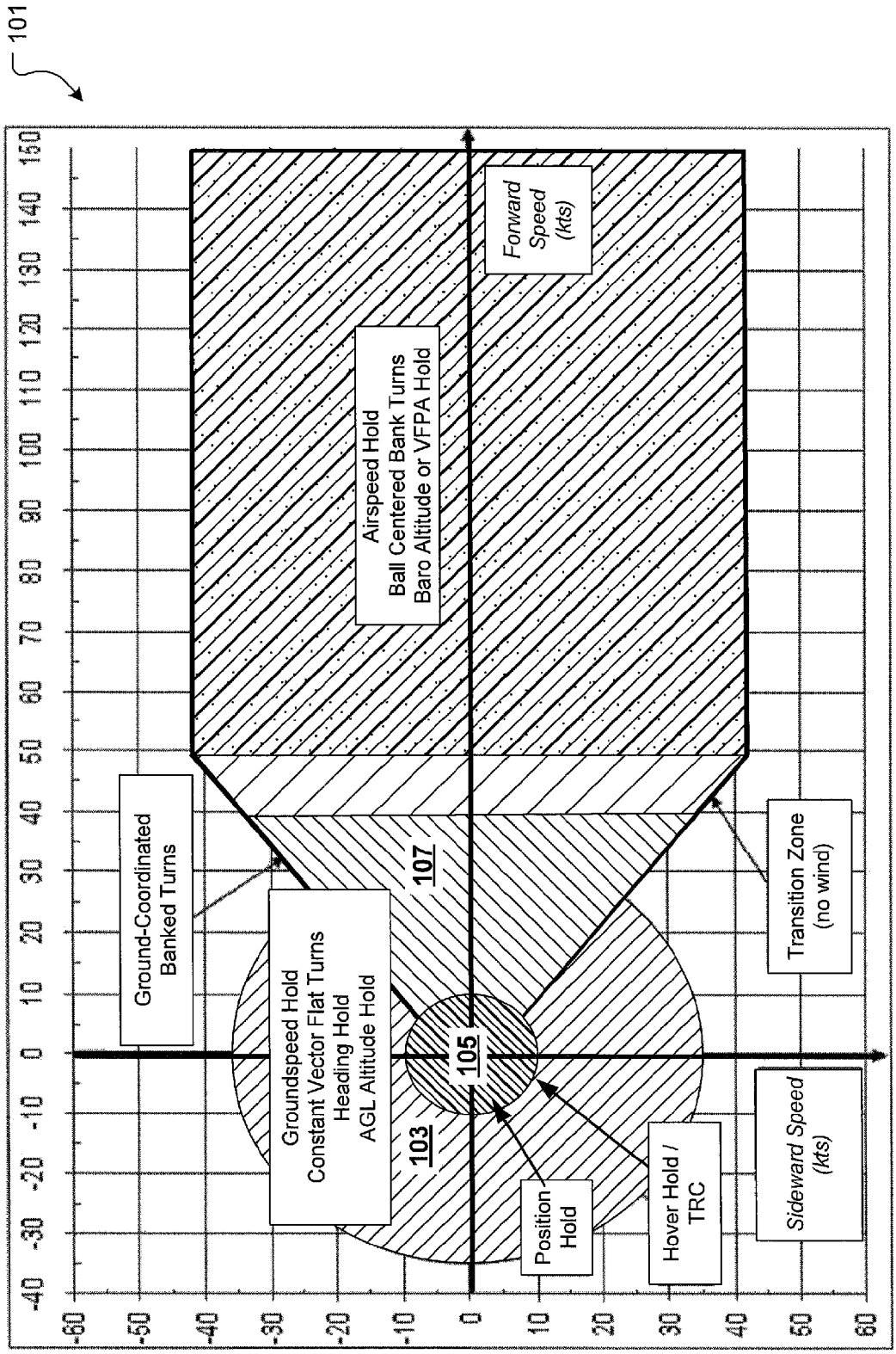
101
Forward Speed (kts)
Airspeed Hold
Ball Centered Bank Turns
Baro Altitude or VFPA Hold
Ground-Coordinated Banked Turns
107
Groundspeed Hold
Constant Vector Flat Turns
Heading Hold
AGL Altitude Hold
105
103
Transition Zone (no wind)
Position Hold
Hover Hold / TRC
Sideward Speed (kts)
-40 -30 -20 -10 0 10 20 30 40 50 60 70 80 90 100 110 120 130 140 150
-60 -50 -40 -30 -20 -10 0 10 20 30 40 50 60

FIG. 1

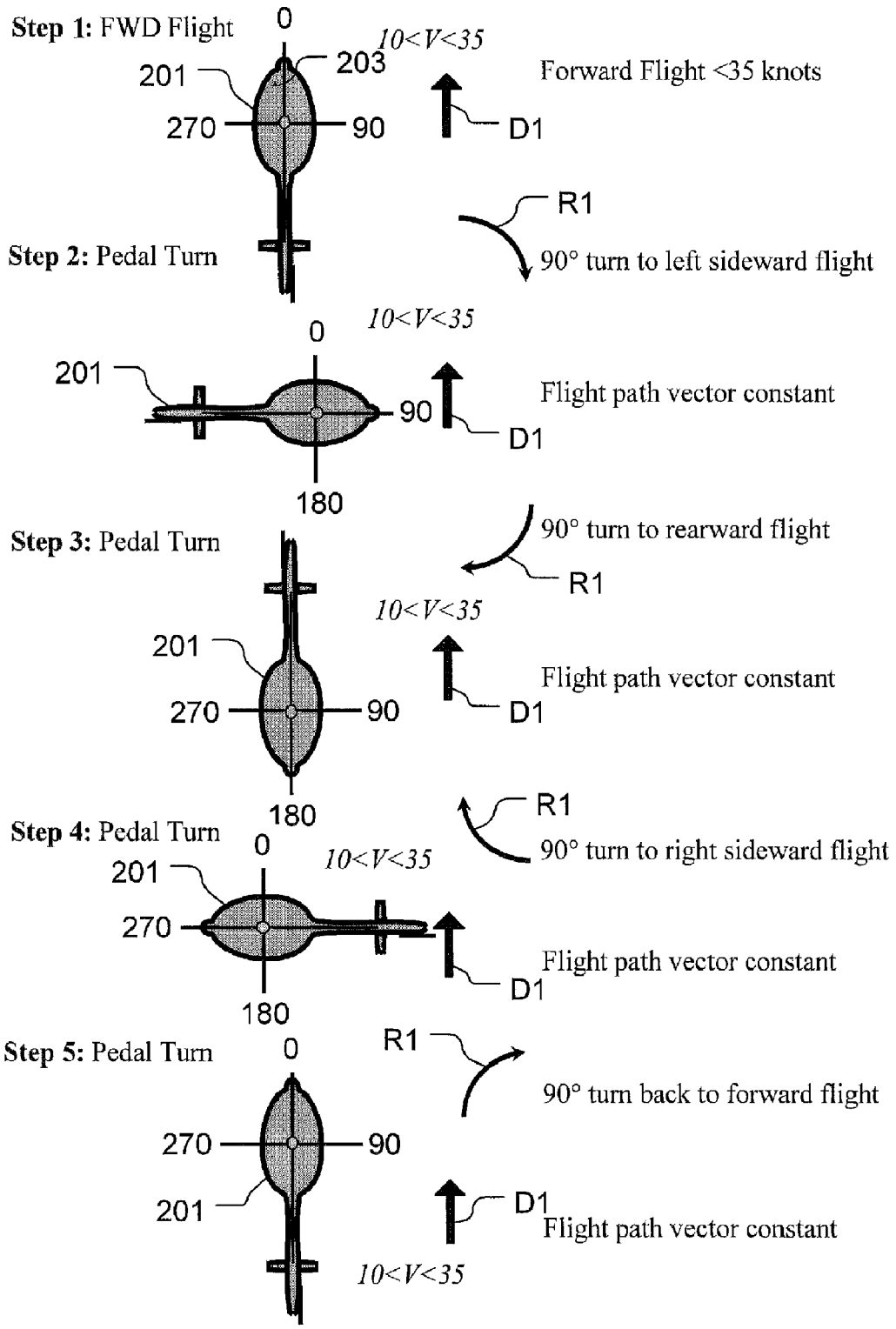
Step 1: FWD Flight
0
10<V<35
201
203
Forward Flight <35 knots
270
90
D1
R1
Step 2: Pedal Turn
90° turn to left sideward flight
10<V<35
0
201
Flight path vector constant
90
D1
180
90° turn to rearward flight
Step 3: Pedal Turn
R1
10<V<35
201
Flight path vector constant
270
90
D1
180
R1
Step 4: Pedal Turn
0
90° turn to right sideward flight
10<V<35
201
270
Flight path vector constant
D1
180
Step 5: Pedal Turn
0
R1
90° turn back to forward flight
270
90
201
D1
Flight path vector constant
10<V<35

FIG. 2

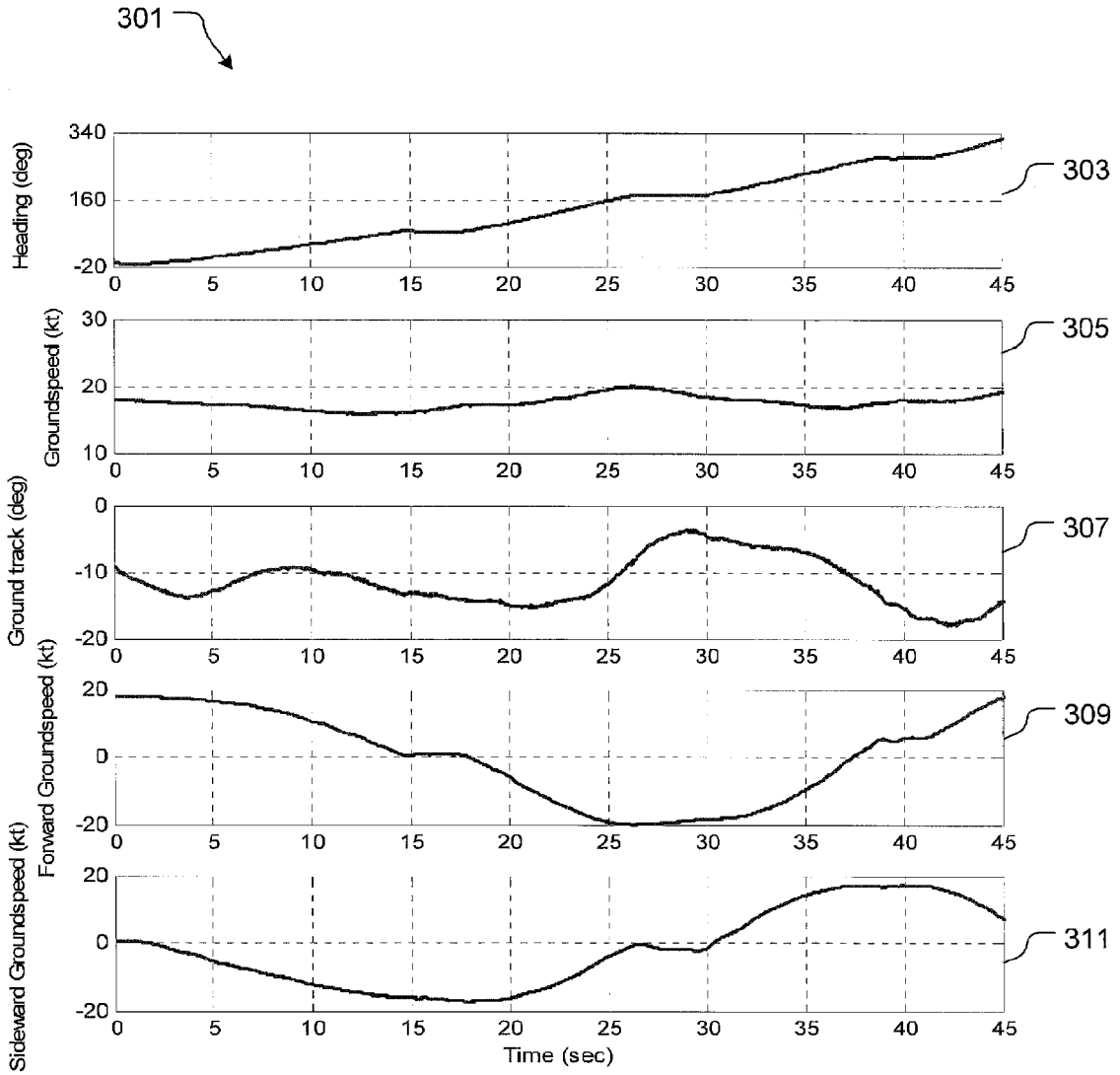
301
Heading (deg)
340
160
-20
303
Groundspeed (kt)
30
20
10
305
Ground track (deg)
0
-10
-20
307
Forward Groundspeed (kt)
20
0
-20
309
Sideward Groundspeed (kt)
20
0
-20
311
0 5 10 15 20 25 30 35 40 45
Time (sec)

FIG. 3

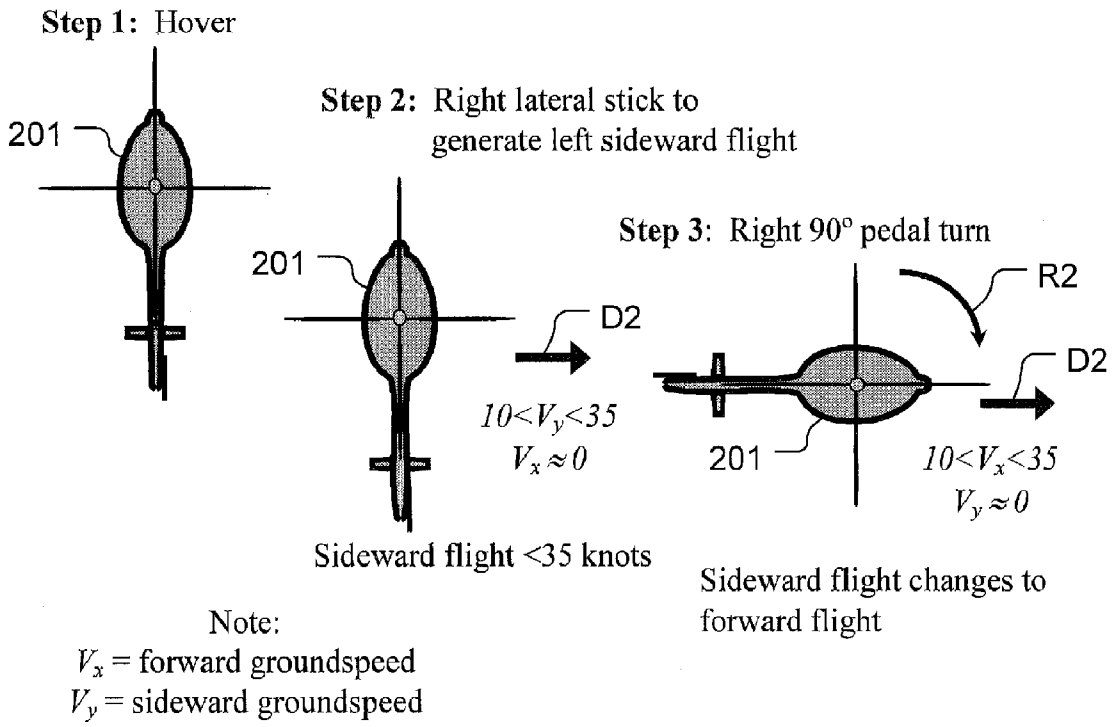
Step 1: Hover
201
Step 2: Right lateral stick to generate left sideward flight
201
D2
$10<V_y<35$
$V_x \approx 0$
Sideward flight <35 knots
Step 3: Right 90° pedal turn
R2
D2
201
$10<V_x<35$
$V_y \approx 0$
Sideward flight changes to forward flight
Note:
V_x = forward groundspeed
V_y = sideward groundspeed

FIG. 4

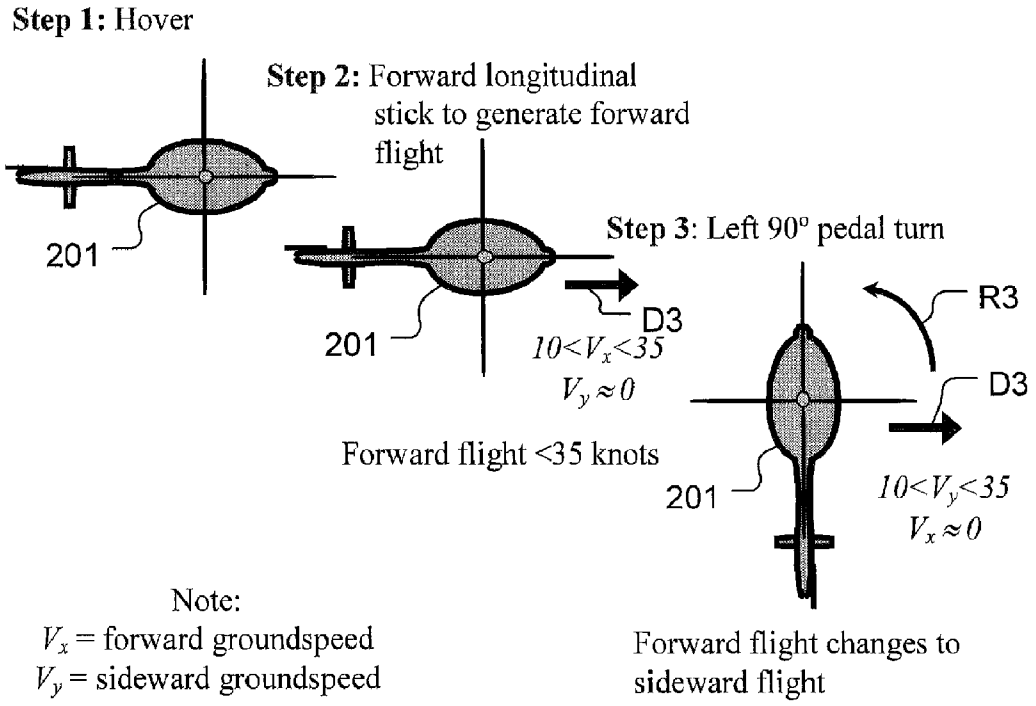
Step 1: Hover
201
Step 2: Forward longitudinal stick to generate forward flight
201
D3
$10<V_x<35$
$V_y \approx 0$
Forward flight <35 knots
Step 3: Left 90° pedal turn
R3
D3
201
$10<V_y<35$
$V_x \approx 0$
Forward flight changes to sideward flight
Note:
V_x = forward groundspeed
V_y = sideward groundspeed

FIG. 5

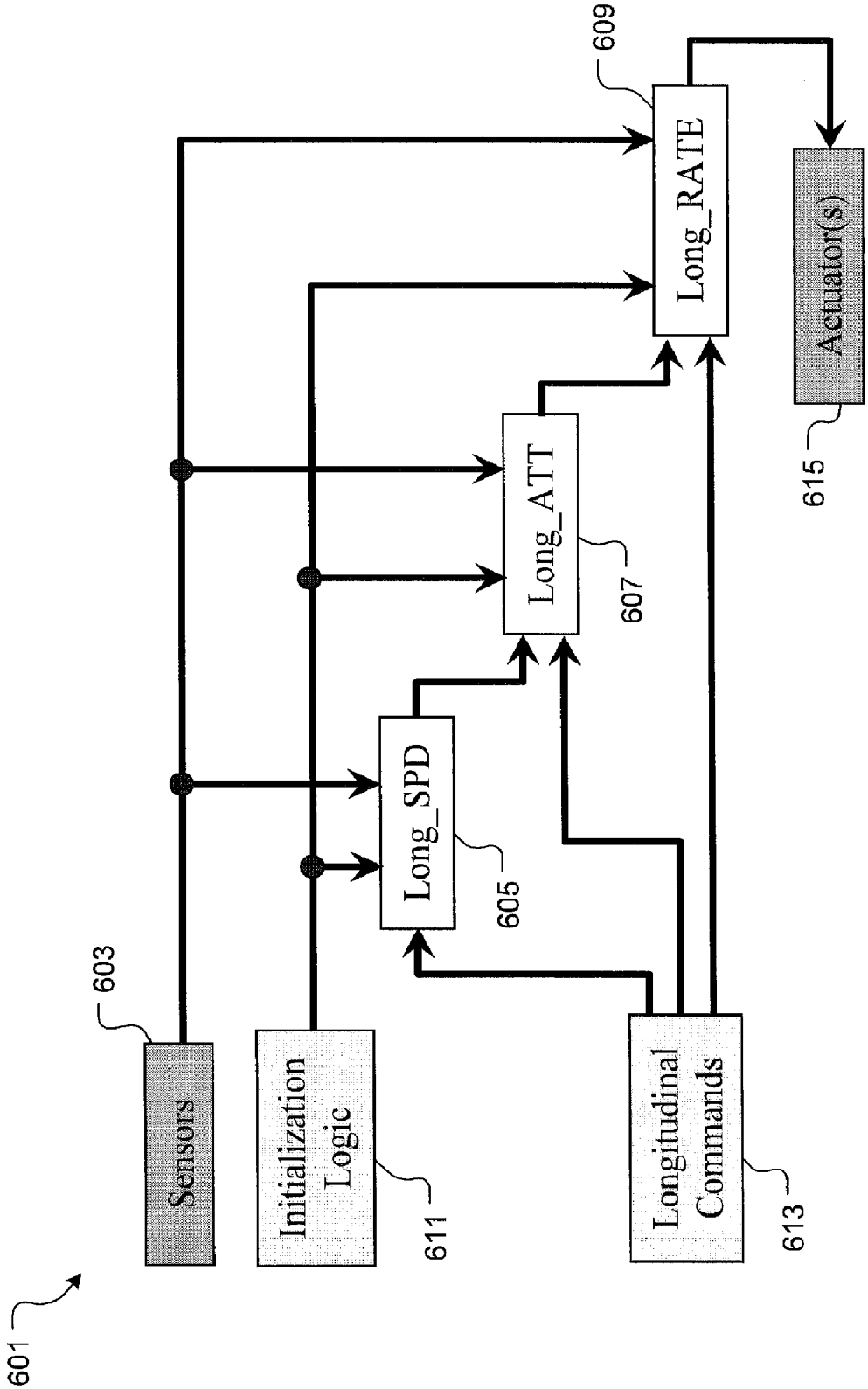
601
603
Sensors
Initialization Logic
611
Long_SPD
605
Long_ATT
607
Longitudinal Commands
613
Long_RATE
609
Actuator(s)
615

FIG. 6

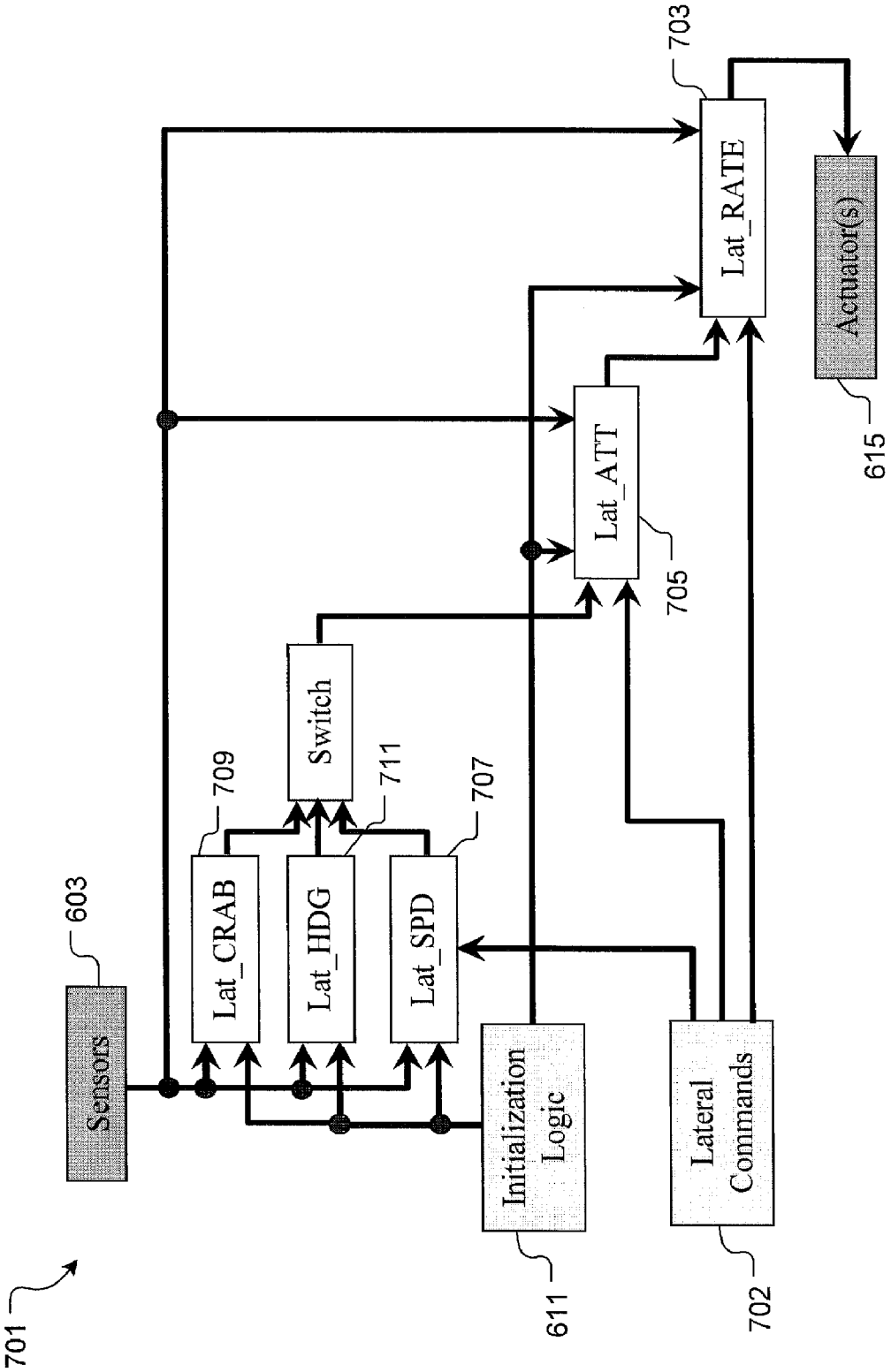
701
603
Sensors
709
Lat_CRAB
Switch
711
Lat_HDG
707
Lat_SPD
Initialization Logic
611
Lat_ATT
705
Lat_RATE
703
Lateral Commands
702
Actuator(s)
615

FIG. 7

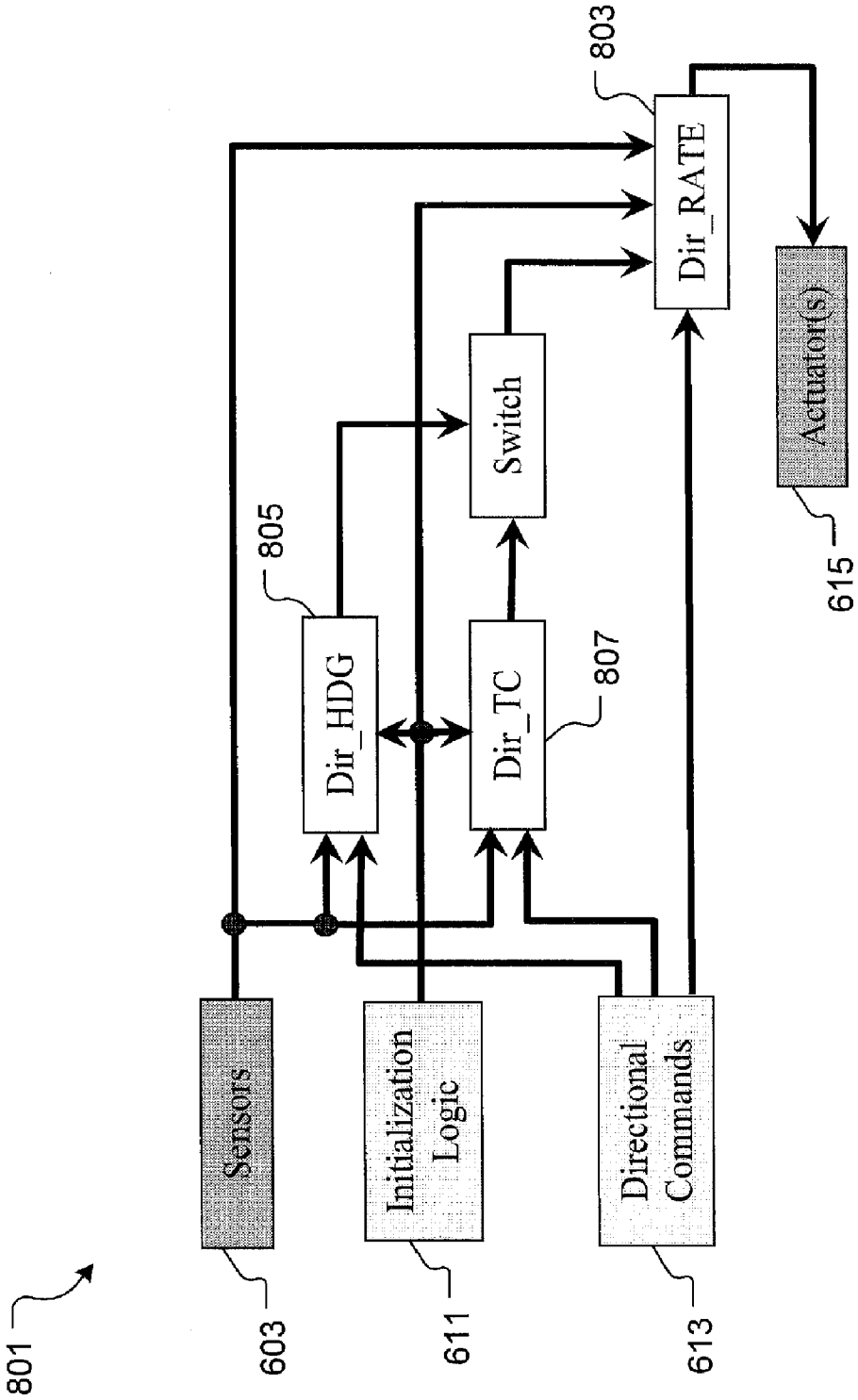
801
Sensors
603
Initialization Logic
611
Directional Commands
613
Dir_HDG
805
Dir_TC
807
Switch
Dir_RATE
803
Actuator(s)
615

FIG. 8

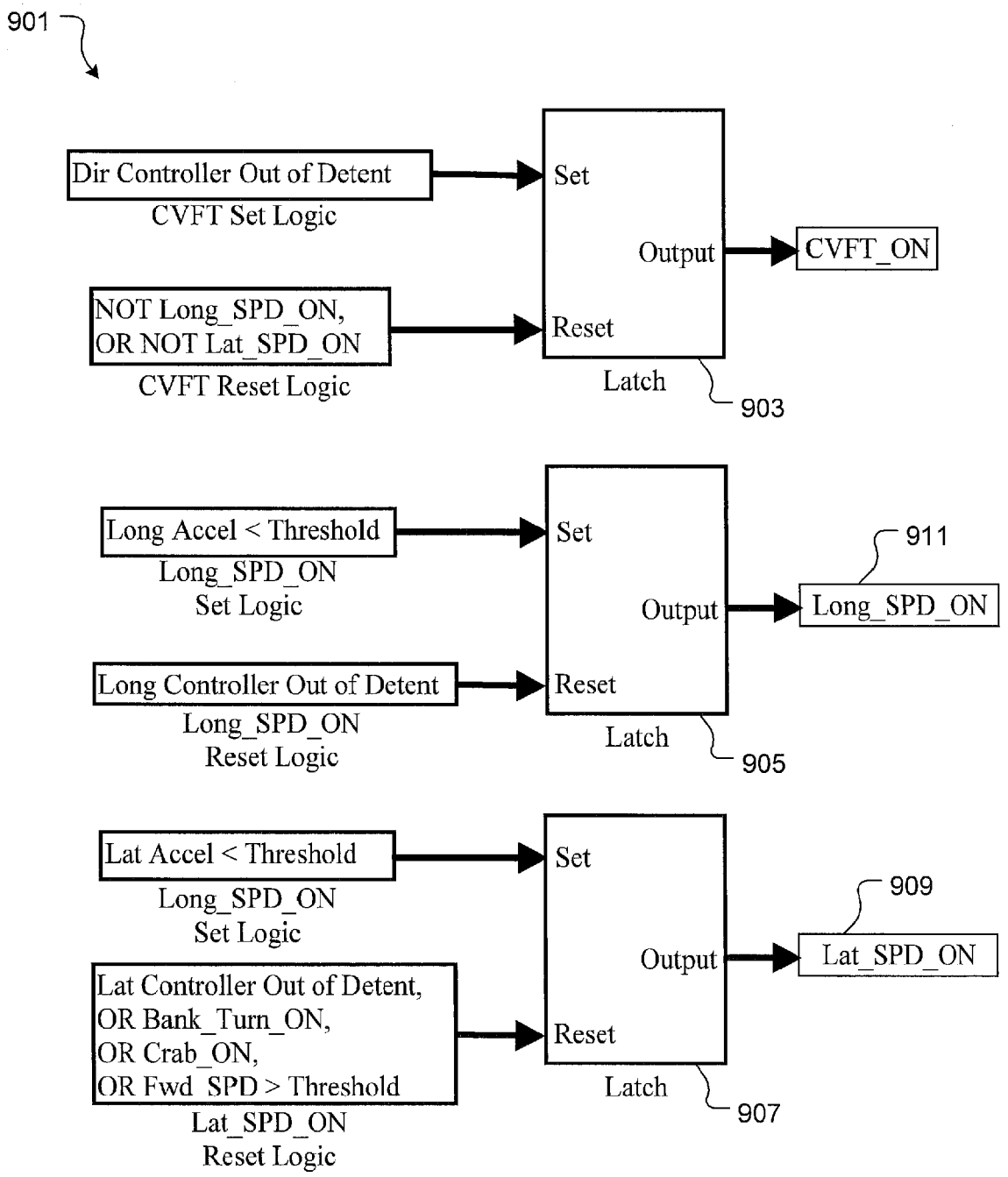
901
Dir Controller Out of Detent
CVFT Set Logic
Set
Output
CVFT_ON
NOT Long_SPD_ON,
OR NOT Lat_SPD_ON
CVFT Reset Logic
Reset
Latch
903
Long Accel < Threshold
Long_SPD_ON
Set Logic
Set
911
Output
Long_SPD_ON
Long Controller Out of Detent
Long_SPD_ON
Reset Logic
Reset
Latch
905
Lat Accel < Threshold
Long_SPD_ON
Set Logic
Set
909
Output
Lat_SPD_ON
Lat Controller Out of Detent,
OR Bank_Turn_ON,
OR Crab_ON,
OR Fwd_SPD > Threshold
Lat_SPD_ON
Reset Logic
Reset
Latch
907

FIG. 9

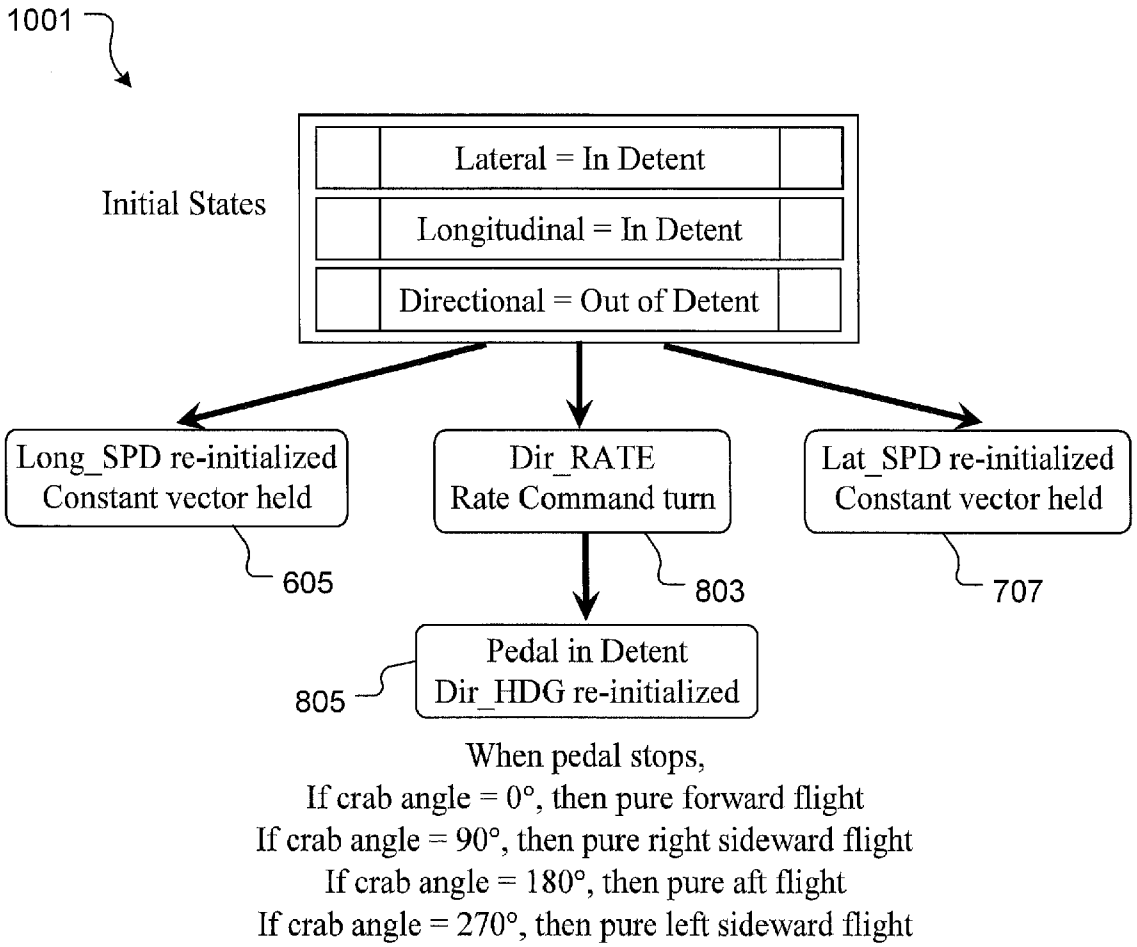
1001
Initial States
Lateral = In Detent
Longitudinal = In Detent
Directional = Out of Detent
Long_SPD re-initialized
Constant vector held
605
Dir_RATE
Rate Command turn
803
Lat_SPD re-initialized
Constant vector held
707
805
Pedal in Detent
Dir_HDG re-initialized
When pedal stops,
If crab angle = 0°, then pure forward flight
If crab angle = 90°, then pure right sideward flight
If crab angle = 180°, then pure aft flight
If crab angle = 270°, then pure left sideward flight

FIG. 10

FLIGHT CONTROL LAWS FOR CONSTANT VECTOR FLAT TURNS

TECHNICAL FIELD

The present invention relates generally to flight control systems, and more particularly, to a flight control system having flight control laws which enable precise aircraft maneuvering relative to the ground.

DESCRIPTION OF THE PRIOR ART

Aircraft which can hover and fly at low speeds include rotorcraft, such as helicopters and tilt rotors, and jump jets, like the AV-8B Harrier and F-35B Lightning II. These aircraft can spend a large portion of their mission maneuvering relative to the ground. Sometimes, this maneuvering must be conducted in confined spaces around external hazards such as buildings, trees, towers, and power lines.

For traditional flight control systems, ground-referenced maneuvering (GRM) requires the pilot to make constant control inputs in multiple axes in order to counter disturbances caused by wind, as well as to remove the natural coupled response of the aircraft. The pilot workload during such maneuvers can become quite high since the pilot must sense un-commanded aircraft motions and then put in the appropriate control input to eliminate the disturbance. In a worst-case scenario, a pilot might be required to fly GRM in a degraded visual environment. With the lack of visual cues to detect off-axis motion, the pilot might accidentally fly into an external hazard while maneuvering in a confined space.

Traditional flight control law designs do not provide the pilot with an easy way to control aircraft crab angle during GRM. Crab angle is defined as the angle between the aircraft's heading and its actual ground path. With these prior designs, adjusting crab angle while maintaining ground track took considerable pilot concentration, since the pilot had to coordinate inputs to both the lateral and directional controllers.

Although pilots generally seek to minimize crab angle during GRM, some mission tasks may call for flat yawing turns while maintaining a constant vector across the ground. For example, on a steep approach, the pilot may need to fly with a crab angle so he or she can see the landing zone. Additionally, the pilot may want to quickly transition out of rearward or sideward flight while continuing along the same ground track. In a final example, the pilot may want to acquire and track a point on the ground without having to fly directly towards it. With prior flight control designs, such maneuvers required extraordinary pilot skill to coordinate the aircraft's motions in multiple control axes.

Although the foregoing developments represent great strides in the area of flight control laws, many shortcomings remain.

BRIEF DESCRIPTION OF THE DRAWINGS

The novel features believed characteristic of the application are set forth in the appended claims. However, the application itself, as well as a preferred mode of use, and further objectives and advantages thereof, will best be understood with reference to the following detailed description when read in conjunction with the accompanying drawings, wherein:

FIG. **1** is a flight envelope with control law modes designed to enable ground reference maneuvers;

FIG. **2** is a schematic of an aircraft utilizing a control system according to the preferred embodiment of the present invention;

FIG. **3** is a set of plots comprising measured flight data of the aircraft of FIG. **2** while performing constant vector flat turns;

FIG. **4** is a schematic view of the aircraft of FIG. **2** changing flight heading from sideward flight to forward flight;

FIG. **5** is a schematic view of the aircraft of FIG. **2** changing flight heading from forward flight to sideward flight;

FIG. **6** is a schematic view of the control system architecture for a set of longitudinal control laws;

FIG. **7** is a schematic view of the control system architecture for a set of lateral control laws;

FIG. **8** is a schematic view of the control system architecture for directional control laws;

FIG. **9** is a schematic view of the control law logic for the control system; and

FIG. **10** is a schematic view a control law flow chart for the control system.

While the control system of the present application is susceptible to various modifications and alternative forms, specific embodiments thereof have been shown by way of example in the drawings and are herein described in detail. It should be understood, however, that the description herein of specific embodiments is not intended to limit the invention to the particular embodiment disclosed, but on the contrary, the intention is to cover all modifications, equivalents, and alternatives falling within the spirit and scope of the process of the present application as defined by the appended claims.

DESCRIPTION OF THE PREFERRED EMBODIMENT

This invention will enable seamless and transient free GRM. More specifically this invention will enable a pilot to use the directional controller to command flat yawing turns at low groundspeeds, while maintaining a constant vector across the ground. The seamless integration of this design requires no manual cockpit switches to select a Constant Vector Flat Turn (CVFT) mode. As a result of this auto-moding logic, the control laws will automatically adjust pitch and roll attitude to keep the aircraft moving in the same direction at a constant speed whenever the pilot inputs a directional command at low speed.

The auto-moding logic of the present application enables seamless and transient free GRM without the need for manual cockpit switches. The control system utilizes relative groundspeed difference to automatically control pitch and roll attitudes so that the aircraft will maintain a constant vector during a low speed flat turn. The control system also allows the pilot to complete a CVFT with minimal workload since the ground vector will automatically be maintained by the control laws without the pilot having to use cockpit switches to change modes.

Referring now to the drawings, FIG. **1** shows a representative flight envelope **101** with a plurality of control law modes designed to enable GRM. Flight envelope **101** comprises a region **103** depicting the CVFT region, wherein the CVFT region is preferably from 10 to 35 knots groundspeed in any direction relative to the aircraft's body axis. The lower bound of region **103** is set by the Hover Hold and Translational Rate Command (TRC) region **105**. The upper bound of region **103** is set by the aircraft's sideward and rearward flight airspeed limits.

FIG. **2** is a schematic of an aircraft **201** utilizing a control system according to the preferred embodiment of the present

invention. FIG. **2** shows aircraft **201** in forward flight within region **103**. Directional inputs turn aircraft **201** in a complete 360 degree yaw movement R**1**, stopping every 90 degrees, and without changing the speed and flight heading of aircraft **201**, as represented with arrow D**1**. In the preferred embodiment, the control system is utilized with rotary aircraft, i.e., a helicopter; however, it should be appreciated that the control system is easily and readily adaptable with control systems of different types of aircraft, both manned and unmanned.

FIG. **2** depicts aircraft **201** traveling between 10 to 35 knots in a forward direction. As is shown, aircraft **201** preferably turns in a yaw direction R**1** at approximately 90 degrees relative to direction D**1**. Aircraft **201** continues to turn in direction R**1** while maintaining a constant flight heading. It should be appreciated that the preferred control system is adapted to turn aircraft **201** at 90 degrees during each application; however, it should be appreciated that alternative embodiments could easily include a control system adapted to turn the aircraft at different angles, e.g., at 30 degrees in lieu of or in addition to 90 degrees. It should also be understood that although shown turning in a clockwise direction, the control system can also turn the aircraft in a counterclockwise movement.

FIG. **2** provides an exemplary depiction of aircraft **201** turning 360 degrees while maintaining forward flight. Step **1** shows aircraft **201** traveling in a constant forward flight, as depicted with arrow D**1**, between 10 and 35 knots. Step **2** depicts application of the control system, namely, the pilot utilizes the control system to rotate aircraft **201** in the clockwise direction approximately 90 degrees, as indicated by arrow R**1**. Step **2** shows aircraft **201** traveling in forward flight while the fuselage faces 90 degrees relative to the directional movement. Steps **3**-**5** provide further illustration of the process being repeated. In particular, each time the control system is utilized, aircraft **201** rotates 90 degrees while maintaining a constant forward heading.

Referring now to FIG. **3** in the drawings, measured flight data **301** of aircraft **201** is shown during a 360 degree CVFT. A plot **303** provides measured data representing the turning movement R**1** of aircraft **201** during the 360 degree turn. A plot **305** provides measured data representing the groundspeed of aircraft **201** during the 360 degree turn. Plot **305** shows aircraft **201** initially starting at 20 knots forward groundspeed during the entire 360 degree CVFT. Plot **305** shows that aircraft **201** holds a relatively steady groundspeed during the 360 degree CVFT. A plot **307** provides measured data representing the ground track of aircraft **201** during the 360 degree CVFT. The forward groundspeed plotted on a plot **309** essentially depicts a cosine curve during the turn, while the sideward groundspeed plotted on a plot **311** shows a sine curve.

Referring now to FIG. **4** in the drawings, a schematic view of aircraft **201** is shown changing flight heading from sideward flight to forward flight. In the exemplary embodiment, the CVFT control system is utilized such that aircraft **201** changes heading from a forward groundspeed Vx of about 0 knots and a sideward groundspeed between 10-35 knots to a forward groundspeed between 10-35 knots and a sideward groundspeed about 0 knots. Step **1** of FIG. **4** shows aircraft **401** during hover, while a step **2** shows aircraft **401** traveling in a sideward groundspeed between 10-35 knots, as depicted with arrow D**2**. In step **2**, a right lateral control stick (not shown) is utilized to generate a left sideward heading. Thereafter, a right 90 degree pedal turn is applied to rotate aircraft **201** in a forward heading with a pedal **203**. In the preferred embodiment, pedal **203** is a pedal manipulated with the pilot's foot; however, it should be appreciated that other forms of devices, i.e, a hand switch could be utilized in lieu of or in addition to pedal **203**. For purposes of this invention, a lateral controller, longitudinal controller, and directional controller are characterized as pedal **203** or similarly suited devices. Step **3** depicts application of the CVFT control system, wherein aircraft **201** turns 90 degrees for changing the heading of aircraft **201**.

Referring now to FIG. **5** in the drawings, an alternative application of the CVFT control system is shown. In the exemplary embodiment, the CVFT control system is utilized to turn aircraft **201** from a forward groundspeed Vx between 10-35 knots and a sideward groundspeed of about 0 knots to a sideward groundspeed between 10-35 knots and a forward groundspeed about 0 knots. Step **1** shows aircraft **201** during hover, while a step **2** shows aircraft **201** traveling in a forward heading having a groundspeed between 10-35 knots, as depicted with arrow D**3**. In step **2**, a forward longitudinal stick is utilized to generate forward flight. Thereafter, a left 90 degree pedal turn is applied to rotate aircraft **201** such that the forward flight of aircraft **201** changes to a sideward flight heading.

Those skilled in the art will understand that the methods for aircraft guidance disclosed in this invention can be applied to any combination of the following: (1) full authority fly-by-wire flight control systems, as well as partial authority mechanical systems; (2) traditional cockpit layouts with a center stick for longitudinal and lateral control, pedals for directional control, and a collective stick for vertical control, as well as more advanced designs which combine multiple control axes into a center or side stick controller; and, (3) any aircraft capable of GRM, including both rotorcraft and jump jets.

The key to enabling seamless and transient free GRM lies in the advanced control law architecture of the CVFT control system as shown in FIGS. **6** to **8**. FIG. **6** shows architecture **601** of the CVFT control system operably associated with one or more longitudinal control laws, FIG. **7** shows architecture **701** of the CVFT control system operably associated with one or more lateral control laws, and FIG. **8** shows architecture **801** of the CVFT control system operably associated with one or more directional control laws according to the preferred embodiment of the invention.

Referring now to FIG. **6** in the drawings, architecture **601** includes one or more aircraft sensors **603** operably associated with the control laws to accomplish GRM. Aircraft sensors **603** can include: an inertial Navigation System (attitudes, attitude rates, and translational accelerations); a Global Positioning System (ground-referenced speeds and positions); an Air Data Computer (airspeed and barometric altitude); and, a Radar or Laser Altimeter (above ground level (AGL) altitude). An aircraft model can be obtained from aerodynamics data and a group of linear models can be developed based on its airspeed from aircraft sensors **603**. These linear models include both lateral and longitudinal equations of motion. Since the aircraft model matrices are large and contain coupling terms of lateral and longitudinal motions within the matrices, it is difficult to determine the best performance control gains for all at the same time. In order to overcome these issues, the linear model of aircraft performance is decoupled first. After the aircraft model is decoupled to lateral and longitudinal equations of motion, the effect of coupling terms between lateral and longitudinal motions can be reduced to a minimum, thus stabilizing the system.

In the preferred embodiment, architecture **601** preferably comprises of a longitudinal control law for forward speed, represented as block **605** "Long_SPD"; a longitudinal control law for pitch angle, represented as block **607** "Long_ATT";

and, a longitudinal control law for pitch rate, represented as block **609** "Long_RATE". Architecture **601** is further provided with initialization logic **611** adapted for determining which loop is active in each axis based on flight conditions and pilot control inputs. Logic **611** will also re-initialize inactive loops in order to eliminate control jumps when switching between the loops to provide seamless and transient free mode changes.

Architecture **601** further includes a longitudinal command **613** generated in the control laws by referencing the pilot's cockpit control input in each axis. The input to the control laws is the difference between the controller's present position and the centered, no force position, which is also referred to as the "detent" position. The control commands can also be generated by a beep switch located in the cockpit to command small and precise changes in aircraft state. The control laws process these control inputs to generate the appropriate aircraft response commands. These commands are then sent out to the control law guidance blocks to maneuver the aircraft. The control law outputs are routed to an actuator **615** for each dynamic axis. For a conventional helicopter, the control laws send control signals to the following actuators: longitudinal axis—main rotor longitudinal swashplate angle; lateral axis—main rotor lateral swashplate angle; vertical axis—main rotor collective pitch; and, directional axis—tail rotor collective pitch.

Since pitch rate is the fastest longitudinal state, Long_RATE **609** is the inner loop of the longitudinal control laws. Next, the Long_ATT **607** loop feeds the Long_RATE control law **609** loop to control pitch attitude. Finally, the Long_SPD control law **605** loop feeds the Long_ATT **607** loop to control forward speed.

When flying with the longitudinal controller in detent outside of the Hover Hold/TRC region **105**, depicted in FIG. **1**, the Long_SPD **605** loop will be active. At lower speeds, this loop will hold constant forward groundspeed, while at higher speeds, airspeed will be held. Once the pilot moves the longitudinal controller out of detent, the control laws can command either pitch attitude (Long_ATT **607**) or pitch rate (Long_RATE **609**).

Referring now to FIG. **7** in the drawings, architecture **701** comprises one or more lateral control laws operably associated with sensors **603**, logic **611**, lateral commands **702**, and actuators **615**. The lateral control laws include: a lateral control of roll rate, represented as block **703** "Lat_RATE"; a lateral control of the roll attitude, represented as block **705** "Lat_ATT"; a lateral control of sideward groundspeed, represented as block **707** "Lat_SPD"; a lateral control of the crab angle, represented as block **709** "Lat_CRAB"; and, lateral control of heading, represented as block **711** "Lat_HDG".

Similar to the longitudinal axis, Lat_RATE **703** is the inner loop of the lateral control laws and the Lat_ATT **705** loop feeds the Lat_RATE **703** loop to control roll attitude. The Lat_ATT **705** loop can be fed by one of three loops, Lat_SPD **707**, Lat_CRAB **709**, or Lat_HDG **711**.

The crab angle used in the Lat_CRAB **709** loop is computed in the control laws using the following equation:

$$\eta=\tan^{-1}(V_y/V_x) \tag{1}$$

where η is the crab angle, V_y is the sideward groundspeed with right positive, and V_x is the forward groundspeed. To avoid a singularity in Equation 1, V_x is limited to be above the Hover Hold/TRC region **103**.

When operating in the Ground-Coordinated Banked Turn (GCBT) envelope as shown by region **107** in FIG. **1**, if both the lateral and directional controllers are in detent, lateral control law logic will hold crab angle through the Lat_CRAB **709** loop. If operating in the CVFT envelope, but not in the GCBT envelope, and the lateral and directional controllers are in detent, the control logic will hold sideward groundspeed constant with the Lat_SPD **707** loop. When operating at higher airspeeds with lateral and directional controllers in detent, the control logic will hold heading constant with the Lat_HDG **711** loop. When the pilot moves the lateral controller out of detent in any of these cases, the control laws can command either roll attitude (Lat_ATT **705**) or roll rate (Lat_RATE **703**).

Referring now to FIG. **8** in the drawings, architecture **801** comprises one or more directional control laws operably associated with sensors **603**, logic **611**, commands **613**, and actuators **615**. The directional control laws include: directional control of yaw rate, represented as block **803** "Dir_RATE"; directional control of heading, represented as block **805** "Dir_HDG"; and, directional turn coordination, represented as block **807** "Dir_TC"

Since yaw rate is the fastest directional state, Dir_RATE **803** is the inner loop of the directional control laws. This loop is fed by the Dir_HDG **805** loop to control aircraft heading at lower speeds. Unlike traditional control law designs, this invention includes an additional loop, parallel to the Dir_HDG **805** loop, to feed the Dir_RATE **803** inner loop. The Dir_TC **807** loop is used to coordinate banked turns throughout the flight envelope.

In the GCBT envelope **107** shown in FIG. **1**, the Dir_TC **807** loop will control crab angle during banked turns. With no directional input, the Dir_TC **807** loop will hold crab angle at zero. Any directional control inputs during a GCBT will result in a change in crab angle in the appropriate direction. Additionally, if the aircraft is in the GCBT envelope, but above the CVFT envelope, directional controller inputs will command changes in crab angle through the Dir_TC **807** loop even in non-turning flight. In this case, once the directional controller is returned to detent, heading hold will be re-engaged (Dir_HDG **805** loop) and the crab angle will be held though the Lat_CRAB **709** loop.

When in the BCBT envelope, the Dir_TC **807** loop will automatically adjust yaw rate based on actual bank angle, true airspeed, and lateral acceleration in order to keep the slip ball centered. Any directional controller inputs in the BCBT envelope will command a change in lateral acceleration, which will subsequently result in sideslip away from the pedal input. Pedal inputs will also result in a slight roll in the direction of the input to provide lateral stability.

In the absence of lateral or directional control inputs while operating in either the GCBT or CVFT envelopes, the directional axis will hold heading through the Dir_HDG **805** loop. If the pilot moves the directional controller out of detent in the CVFT envelope with both the lateral and longitudinal controllers in detent, the directional control laws will command a yaw rate through the Dir_RATE **803** loop. In this case, the control laws will maintain a constant ground vector by using the Long_SPD **605** and Lat_SPD **707** loops.

During the CVFT, when the directional controller is first moved out of detent, the control laws will capture the aircraft's current groundspeed in the earth axis coordinate system. The control laws keep track of the difference between the aircraft's actual groundspeed and the captured groundspeed. This relative groundspeed difference is converted from the earth axis to the aircraft's body axis using the following equations:

$$\Delta V_x=\Delta V_{north}\cdot\cos\psi+\Delta V_{easi}\cdot\sin\psi \tag{2}$$

$$\Delta V_y=\Delta V_{easi}\cdot\cos\psi-\Delta V_{north}\cdot\sin\psi \tag{3}$$

where ΔV_x is the groundspeed difference in the body axis forward direction, ΔV_y is the groundspeed difference in the body axis sideward direction with right positive, ΔV_{north} is the groundspeed difference in the earth axis north direction, ΔV_{east} is the groundspeed difference in the earth axis east direction, and ψ is the aircraft heading. The values for ΔV_x and ΔV_y are then used in the Long_SPD **605** and Lat_SPD **707** blocks respectively to command the pitch and roll attitudes needed to minimize the relative groundspeed difference during the flat turn.

Referring now to FIG. **9** in the drawings, control law logic **901** for the CVPT mode is shown. Control law logic **901** comprises one or more of latch **903**, latch **905**, and latch **907** adapted to control when a mode is turned on or off. If the reset conditions are met, then the mode will always be off. If the reset conditions are not met, then the mode will be latched on when the set conditions are met. The CVPT mode will be reset whenever lateral speed hold, depicted as block **909** "Lat_SPD_ON" or a longitudinal speed hold, depicted as block **911** "Long_SPD_ON" are not on and will be set when the directional controller is out of detent.

Both longitudinal speed hold latch **905** and lateral speed hold latch **907** will be reset when their respective controller is out of detent. Additionally, the lateral speed hold latch **907** will be reset when the banked turn (Bank_Turn_ON) or crab hold (Crab_ON) modes are on, or if forward speed exceeds the CVPT threshold (typically around 35 KGS). The longitudinal and lateral speed hold latches will be set when their respective acceleration falls below the acceleration threshold (typically around 2 ft/sec^2).

Referring now to FIG. **10** in the drawings, a control law flow chart **1001** for a CVFT is presented. When the directional controller is initially moved out of detent, the CVPT mode will be engaged. The longitudinal and lateral speed hold blocks (Long_SPD **605** and Lat_SPD **707**) will be reinitialized to feedback the relative groundspeed differences calculated in equations 2 and 3. Once the directional controller is returned to detent following the CVFT, directional control laws will hold heading by re-engaging the Dir_HDG **805** loop. The longitudinal and lateral axes will continue to hold a constant ground vector until the pilot commands a change by moving either the longitudinal or lateral controller out of detent. This design enables the pilot to command and hold any crab angle around the 360 degree circle, while the aircraft continues to move across the ground on a constant vector. As shown, when the pedal stops, if the crab angle equals 0 degrees, then aircraft **201** travels in pure forward flight; if the crab angle is 90 degrees, aircraft **201** travels in pure right side flight; if the crab angle is 180 degrees, then aircraft **201** travels in pure aft flight; and, if the crab angle is 270 degrees, then aircraft **201** travels in pure left sideward flight.

The particular embodiments disclosed above are illustrative only, as the invention may be modified and practiced in different but equivalent manners apparent to those skilled in the art having the benefit of the teachings herein. It is therefore evident that the particular embodiments disclosed above may be altered or modified, and all such variations are considered within the scope and spirit of the invention. Accordingly, the protection sought herein is as set forth in the description. It is apparent that an invention with significant advantages has been described and illustrated. Although the present invention is shown in a limited number of forms, it is not limited to just these forms, but is amenable to various changes and modifications without departing from the spirit thereof.

The invention claimed is:

1. An aircraft, comprising:

a sensor carried by the aircraft, the sensor being adapted to sense a directional movement of the aircraft;

an actuator carried by the aircraft, the actuator being utilized to control the directional movement of the aircraft; and

a control system in data communication with the aircraft sensor and operably associated with the actuator, the control system having:

a model adapted to decouple the directional movement of the aircraft into a lateral equation of motion and a longitudinal equation of motion;

a lateral control architecture in data communication with the model, the lateral control architecture being adapted to utilize the lateral equation of motion to control the lateral motion of the aircraft;

a longitudinal control architecture in data communication with the model, the longitudinal control architecture adapted to utilize the longitudinal equation of motion to control the longitudinal motion of the aircraft; and

an initialization command logic in data communication with the lateral control architecture and in data communication with the longitudinal control architecture;

wherein the initialization command logic selectively activates the lateral control architecture for controlling the lateral motion of the aircraft and selectively activates the longitudinal control architecture for controlling the longitudinal motion of the aircraft; and

wherein the control system utilizes the lateral control architecture and the longitudinal control architecture to control speed variations of the aircraft while the aircraft maintains a constant vector heading across a ground surface.

2. The aircraft of claim **1**, the aircraft further comprising:

a directional controller, the directional controller being manipulated by a pilot controlling the aircraft, the directional controller being in data communication with the control system.

3. The aircraft of claim **2**, the directional control architecture comprising:

a directional heading control loop;

a directional turn coordination control loop; and

a directional yaw rate control loop.

4. The aircraft of claim **2**, further comprising:

a directional control latch in data communication with the directional control architecture;

wherein, as the directional controller is moved out of a detent position, the directional control latch activates a constant vector flat turn motion.

5. The aircraft of claim **1**, the lateral control architecture comprising:

a lateral sideward groundspeed control loop;

a lateral roll attitude control loop; and

a lateral roll rate control loop.

6. The aircraft of claim **5**, further comprising:

a lateral controller carried by the aircraft, the lateral controller being manipulated by a pilot controlling the aircraft, the lateral controller creating a lateral command in data communication with the lateral sideward groundspeed control loop, the lateral roll attitude control loop, and the lateral roll rate control loop.

7. The aircraft of claim **6**, further comprising:

a lateral control latch in data communication with the control system;

wherein, as the lateral controller is moved out of a detent position, the lateral control latch resets a lateral speed hold.

8. The aircraft of claim **1**, the longitudinal control architecture comprising:

a longitudinal forward speed control loop;

a longitudinal pitch angle control loop; and

a longitudinal pitch rate control loop.

9. The aircraft of claim **8**, the longitudinal control architecture further comprising:

a longitudinal controller carried by the aircraft, the longitudinal controller being manipulated by a pilot controlling the aircraft, the longitudinal controller creating a longitudinal command in data communication with the longitudinal forward speed control loop, the longitudinal pitch angle control loop, and the longitudinal pitch rate control loop.

10. The aircraft of claim **9**, further comprising:

a longitudinal control latch in data communication with the control system;

wherein, as the longitudinal controller is moved out of a detent position, the longitudinal control latch resets a longitudinal speed hold.

11. A method to control flat yawing turns of an aircraft while maintaining a constant vector heading across a ground surface, the method comprising:

sensing the speed variation of the aircraft with a sensor carried by the aircraft, the speed variation having:

a longitudinal direction of motion; and

a lateral direction of motion;

controlling the speed variation of the aircraft with actuators operably associated with the aircraft;

providing a control system in data communication with the aircraft sensor and operably associated with the actuators, the control system having:

a model;

a lateral control architecture;

a longitudinal control architecture; and

an initialization command logic in data communication with the lateral control architecture and in data communication with the longitudinal control architecture;

decoupling the directional movement of the aircraft into the lateral equation of motion and the longitudinal equation of motion with the model;

controlling the lateral direction of motion with a lateral control architecture, the lateral control architecture utilizing the lateral equation of motion;

controlling the longitudinal direction of motion with a longitudinal control architecture, the longitudinal control architecture utilizing the longitudinal equation of motion; and

selectively activating the lateral control architecture and the longitudinal control architecture with the initialization command logic;

wherein the control system receives sensed speed variation data from the sensor and operably controls the actuators, thus providing selective control of the yawing turns of the aircraft while maintaining a constant vector across a ground surface.

12. The method of claim **11**, the method further comprising:

commanding the flat yawing turns with a directional controller manipulated by a pilot controlling the aircraft, the directional controller being operably associated with a directional control architecture, the directional control architecture being in data communication with the control system.

13. The method of claim **12**, wherein the commanding of the flat yawing turns with the directional control architecture comprises:

communicating data through a directional heading control loop;

communicating data through a directional turn coordination control loop; and

communicating data through a directional yaw rate control loop.

14. The method of claim **12**, further comprising:

activating the constant vector flat turn with a directional control latch as the directional controller is moved out of a detent position, the directional control latch being operably associated with the directional control architecture.

15. The method of claim **11**, wherein controlling the lateral direction of motion with the lateral control architecture comprises:

communicating lateral motion data through a lateral sideward groundspeed control loop;

communicating lateral motion data through a lateral roll attitude control loop; and

communicating lateral motion data through a lateral roll rate control loop.

16. The method of claim **11**, further comprising:

controlling the lateral direction of motion with a lateral controller manipulated by a pilot controlling the aircraft, the lateral controller being operably associated with the lateral control architecture.

17. The aircraft of claim **16**, further comprising:

resetting a lateral speed hold with a lateral control latch as the lateral controller is moved out of a detent position, the lateral control latch being in data communication with the lateral control architecture.

18. The method of claim **17**, wherein controlling the longitudinal direction of motion with the longitudinal control architecture comprises:

communicating longitudinal motion data through a longitudinal forward speed control loop;

communicating longitudinal motion data through a longitudinal pitch angle control loop; and

communicating longitudinal motion data through a longitudinal pitch rate control loop.

19. The aircraft of claim **11**, the longitudinal control architecture further comprising:

controlling the longitudinal direction of motion with a longitudinal controller manipulated by a pilot controlling the aircraft, the longitudinal controller being operably associated with the longitudinal control architecture.

20. The aircraft of claim **19**, further comprising:

resetting a longitudinal speed hold with a longitudinal control latch as the longitudinal controller is moved out of a detent position, the longitudinal control latch being in data communication with the longitudinal control architecture.

* * * * *