N94-13322

DESIGN AND PILOT EVALUATION OF THE RAH-66 COMANCHE SELECTABLE CONTROL MODES

Phillip J. Gold
Senior Engineer Handling Qualities
United Technologies Corporation, Sikorsky Aircraft Division
Stratford, Connecticut

James B. Dryfoos
Technical Specialist Flying Qualities
Boeing Defense & Space Group, Helicopters Division
Philadelphia, Pennsylvania

ABSTRACT

The RAH-66 Comanche helicopter has been designed to possess superior handling qualities over a wide range of flight conditions. The control laws have been tailored to satisfy the requirements of ADS-33C and the Weapon System Specification (WSS). This paper addresses the design of the Comanche Selectable Mode control laws (Velocity Stabilization / Hover Hold and Altitude Hold), which provide the additional stabilization and control augmentation needed when flying in a Degraded Visual Environment (DVE) . An overview of the RAH-66 control laws is presented, including a detailed description of the Selectable Modes design. The primary focus of this paper is the results of piloted evaluation of these control laws in the Boeing motion-base simulator. These tests substantiate the detailed design of the Comanche Selectable Mode control laws. All tested DVE tasks (ADS-33C, sections 4.4 and 4.5) were rated Level 1. Other evaluation tasks confirmed the mission suitability of the control system. These control laws are ready for formal ADS-33C compliance testing in the Sikorsky Full Mission Simulator (FMS).

NOMENCLATURE

AC/AH	Attitude Command/Attitude Hold
AC/VH	Attitude Command/Velocity Hold
AFCS	Automatic Flight Control System
AGL	Above Ground Level
ALTHLD	Altitude Hold
BMR	Bearingless Main Rotor
DEM/VAL	Demonstration/Validation
DVE	Degraded Visual Environment
FOV	Field of View
FMS	Full Mission Simulator
HAC	Helicopter Air Combat
HMD	Helmet Mounted Display
HQR	Handling Qualities Rating
LSTC	Low Speed Turn Coordination
MEP	Mission Equipment Package
NOE	Nap of the Earth
PFCS	Primary Flight Control System
PIO	Pilot Induced Oscillations
PMGW	Primary Mission Gross Weight
RC/AH	Rate Command/Attitude Hold
RFOV	Restricted Field of View
TC	Turn Coordination
UCE	Usable Cue Environment
VCR	Visual Cue Rating
VC/PH	Velocity Command/Position Hold
VELSTAB	Velocity Stabilization
WSS	Weapon System Specification

INTRODUCTION

Control Law Design

The RAH-66 control system consists of a Primary Flight Control System (PFCS) and an Automatic Flight Control System (AFCS). The PFCS and AFCS use explicit model-following control laws to provide both control and stability augmentation. The PFCS is the flight critical portion of the flight control system while the AFCS is the mission critical portion. The AFCS augments the performance of the PFCS in order to meet the requirements of ADS-33C (Reference 1) by providing Level 1 handling qualities for all mission task elements in a Usable Cue Environment (UCE) of 1 or 2 and at least Level 2 handling qualities in a UCE of 3. To provide these capabilities, the AFCS consists of both automatic and manually selected modes which allow the pilot to tailor the control system for the existing flight conditions. These modes provide increasing levels of vehicle augmentation combined with improved control precision to produce superior flight performance and low pilot workload. The Core AFCS is the basic operational mode of the control system and allows the pilot to make full use of the maneuverability / agility of the Comanche.

The Comanche Selectable Modes, Velocity Stabilization (VELSTAB) and Altitude Hold (ALTHLD), can be engaged anywhere in the flight envelope in order to respond to changing flight/visual conditions or when reduced pilot workload is desired. VELSTAB provides air and ground referenced Velocity Hold, Hover Hold with linear Velocity Command, and ground referenced Low Speed Turn Coordination. ALTHLD provides either radar or barometric referenced Altitude Hold with automatic reference switching and Rate of Climb Command. A simplified block diagram of the longitudinal VELSTAB axis and its integration with the PFCS and Core AFCS, is presented in Figure 1. In the PFCS, pilot inputs are passed through appropriate command shaping to generate a high authority, high frequency command path. Rate

DJI-1009
IPR2023-01105

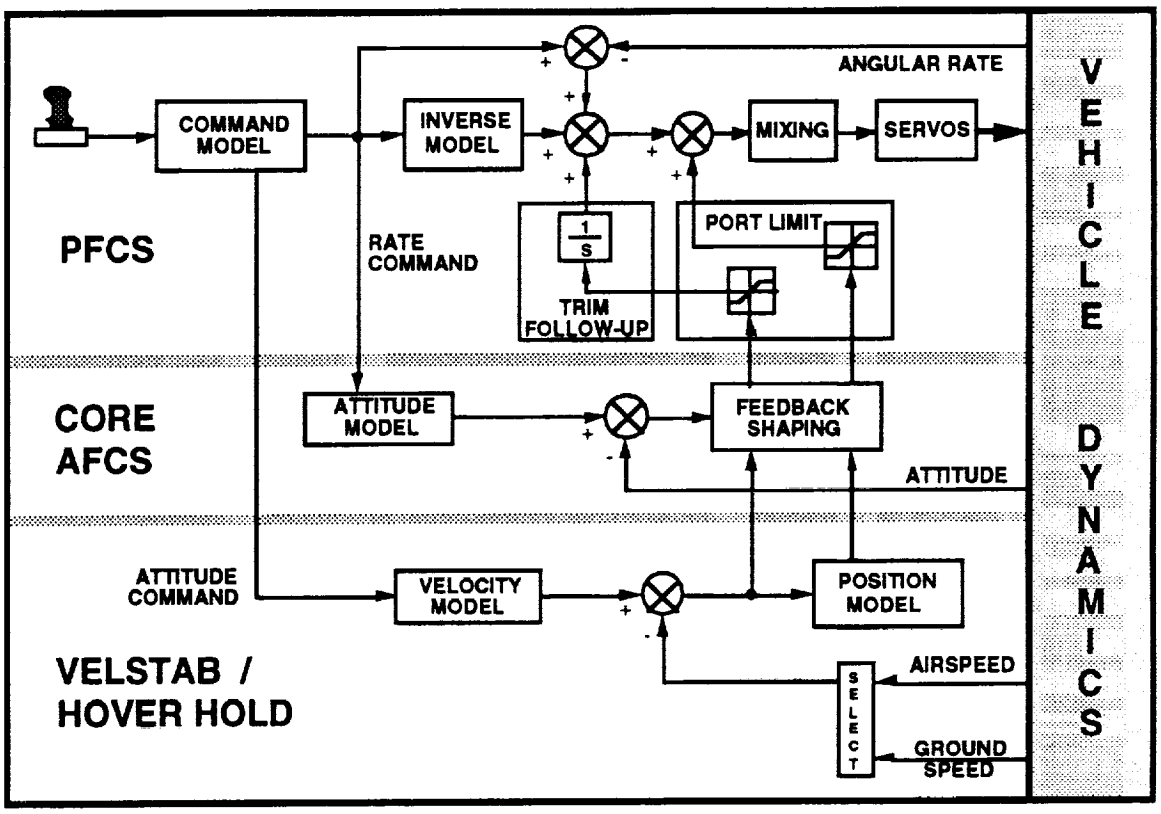

FIGURE 1. COMANCHE LONGITUDINAL CONTROL LAWS

stabilization and port limited AFCS commands are summed with the PFCS feed-forward command and the total trim requirement in each axis to produce a total command vector. The resulting command vector is mapped into actuator position commands through mixing to drive the control surfaces. The AFCS, which includes VELSTAB / Hover Hold, consists of attitude, velocity, and position models and both feed-forward control augmentation and feedback stabilization to the PFCS for model following.

Preliminary design of the Core AFCS and Selectable Modes was conducted at Sikorsky during the LH DEM/VAL contract and as part of the current prototype contract. Following preliminary piloted evaluation in the Sikorsky FMS, the control laws were transferred to the Boeing facility for detailed design and further pilot testing. The "final" detail design has been recently returned to Sikorsky.

PFCS / Core AFCS Operation and Structure
The Comanche PFCS control laws are partitioned into two distinct layers: Core and Mission PFCS. While these control laws use a common structure, they are parameterized differently. Both are degraded modes with respect to the default Core AFCS control laws. The system reverts to the Mission PFCS when the Core AFCS is either deselected or multiple failures occur. The system automatically reverts to its most degraded flight capable mode, Core PFCS, when the sensor requirements of the Mission PFCS are no longer available. The Core PFCS may be characterized as a fixed gain system that does not rely on any feedback sensors. The Mission PFCS features airspeed scheduling of parameters and yaw rate damping. Both sets of control laws feature command shaping that has been designed to be commensurate with the types of tasks envisioned for the respective degraded modes.

The Comanche Core AFCS control laws complement those in the PFCS. The PFCS control law structure is augmented with attitude and heading hold control laws. On each axis, the parameters of the PFCS command shaping are altered to provide the basis for the AFCS model-following control laws. Rate feedback is added to the longitudinal and lateral axes of the PFCS (note, the directional axis already includes rate feedback through the Mission PFCS). Collectively, these control laws execute an explicit model-following rate command / attitude hold (RC/AH) system.

The Core AFCS predominantly executes the attitude hold portion of the overall control law. Full-time attitude stabilization is featured via the model following control structure. Integral hold of commanded attitudes and heading are featured once the aircraft is brought to trimmed state, to enhance disturbance rejection. All steady state attitude errors are washed out of the AFCS and transferred to the PFCS trim follow-up module. In this manner, all trim resides in the PFCS. Since the Comanche is not expected to be constrained with respect to inertial attitude, the attitude errors of the AFCS are

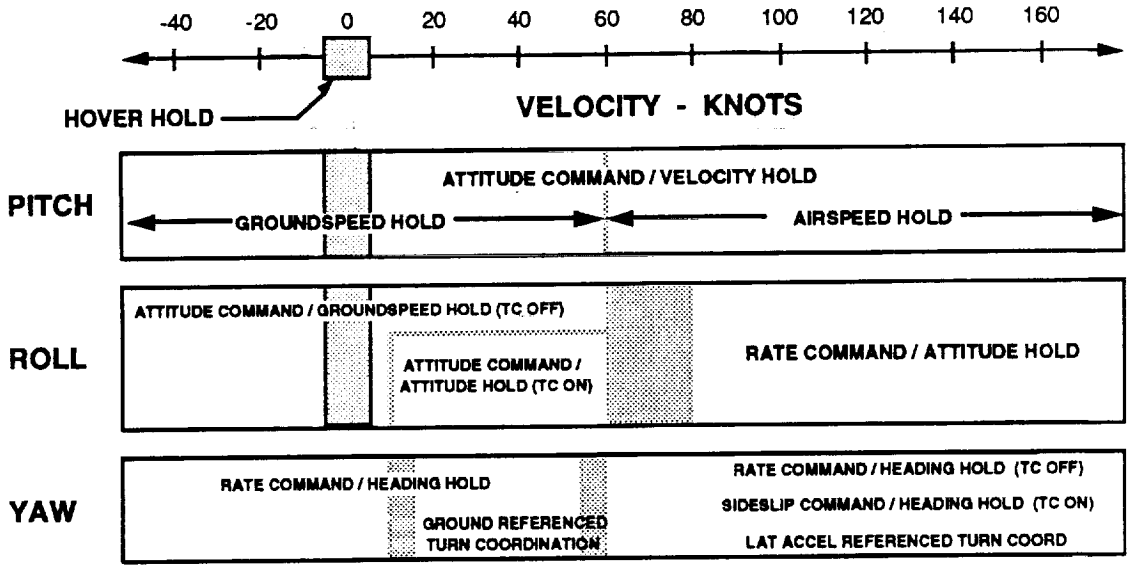

FIGURE 2. VELSTAB CHARACTERISTICS vs VELOCITY

referenced in inertial space. This requires transformation of body referenced rate commands for all sources to the earth axes and subsequent re-referencing of errors back into the body axes, where the controls are referenced.

Automatic turn coordination is enabled above 60 kts. In general, the turn coordination function provides longitudinal, lateral and directional body axis rate commands which minimize lateral acceleration in a turn. These commands not only integrate with the AFCS attitude command control laws, but also provide feed-forward outputs to directly offset PFCS rate feedback not consistent with coordinated turning flight. While the vehicle is in coordinated flight, the directional controller may be used to adjust the coordinated yaw rate, producing an apparent sideslip command control law. A momentary turn coordination release switch (TC Release) is available on the cyclic grip so that the pilot may manually suppress the automatic turn coordination to facilitate mission tasks that are not encompassed by the inhibit logic such as high speed lateral maneuvers.

Velocity Stabilization / Hover Hold

The Velocity Stabilization mode is engaged manually by pressing the VEL/HVR HOLD switch on the AFCS control panel. Figure 2. provides a graphical representation of the VELSTAB characteristics versus groundspeed for the pitch, roll, and yaw axes. The pitch axis response-type is attitude command / velocity hold (AC/VH) at all speeds, except when in the Hover Hold mode where a velocity command / position hold (VC/PH) response is provided. Although not required by ADS-33C, velocity hold was selected (instead of attitude hold) in order to further reduce pilot workload and more easily yield satisfactory (Level 1) handling qualities. Groundspeed is used as the velocity reference at low speeds, while airspeed is used at high speed.

The roll axis response-type is AC/VH at low speeds, except when in the Hover Hold mode (VC/PH) or when in a low speed coordinated turn (attitude command / attitude hold {AC/AH}). The roll response-type automatically changes modes from AC/VH to RC/AH between 60 and 80 kts. This combination of response-types provides the pilot with good tactile cues related to the roll attitude of the aircraft when maneuvering at low speeds while eliminating trim forces on the controller at high speeds when in a steady turn.

Hover Hold is enabled whenever the VELSTAB mode is engaged and Hover Hold engages when groundspeed, pitch and roll rates, longitudinal and lateral linear accelerations, and pitch and roll stick commands are all small. This 'gate' allows the pilot to maneuver through hover without being inadvertently grabbed by hover hold. As previously mentioned, the pitch and roll axis response-types are VC/PH when in the Hover Hold mode. The velocity command response is provided at groundspeeds of less than ±5 kts making it easier for the pilot to precisely position the aircraft in DVE conditions. Auto-moding of the pitch and roll response-types from velocity command to attitude command occurs when the pilot commands a velocity that exceeds the 5 kt threshold or when the pilot applies a large cyclic input. The second criteria allows the pilot to break out of Hover Hold quickly.

Figure 3 presents a more detailed block diagram of the VELSTAB control laws for the pitch axis. The Velocity Command Model calculates the desired longitudinal velocity based on inputs from the PFCS and the core AFCS. The commanded pitch attitude is multiplied by the acceleration due to gravity to get the commanded longitudinal acceleration. The acceleration is integrated to get commanded velocity. The commanded velocity is compared to the reference and the result is the velocity error. The velocity reference is air-

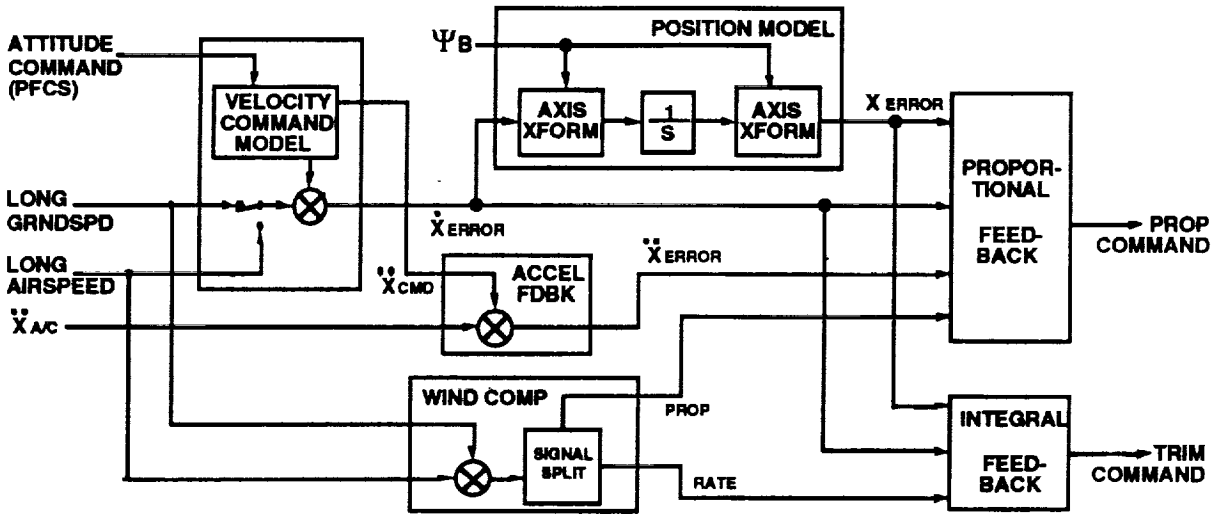

FIGURE 3. VELSTAB BLOCK DIAGRAM

speed when both groundspeed and airspeed exceed 60 kt, otherwise the reference is groundspeed. The Position Model calculates the inertial velocity error from the longitudinal and lateral velocity errors (body referenced) and heading. When position hold is engaged, this velocity error is integrated to yield an inertial position error. The inertial position errors are then converted back to body axis errors. This position error is passed to the VELSTAB Proportional and Integral Feedback Modules described below.

Acceleration Feedback is active when position hold is engaged. The commanded longitudinal acceleration is compared to the actual longitudinal acceleration and the acceleration error is passed to the Proportional Feedback Module described below.

To further enhance low speed operation, Wind Compensation is active when groundspeed is the velocity reference. Airspeed and groundspeed are compared to calculate the wind speed, which is multiplied by a gain to yield a feed-forward trim command. This signal is split into proportional and rate terms and sent to the Proportional and Integral Feedback Modules respectively. This implementation maintains a zero steady-state output.

The Proportional Feedback Module multiplies the acceleration, velocity, and position error signals by gains and sums the result. The wind and VELSTAB shaping compensation (described below) signals are then added and the total signal is passed to the Core AFCS Output Module (see Figure 4).

The Integral Feedback Module selects either the velocity error signal or the position error signal for integral feedback depending on whether position hold is engaged. The wind compensation signal is added to the selected signal and the total is sent to the Core AFCS Trim Transfer Module (see Figure 4).

VELSTAB Shaping Compensation (not shown) is active when in velocity command mode, and is used to cancel a portion of the PFCS commands. The PFCS feed-forward commands are lagged and then passed to the

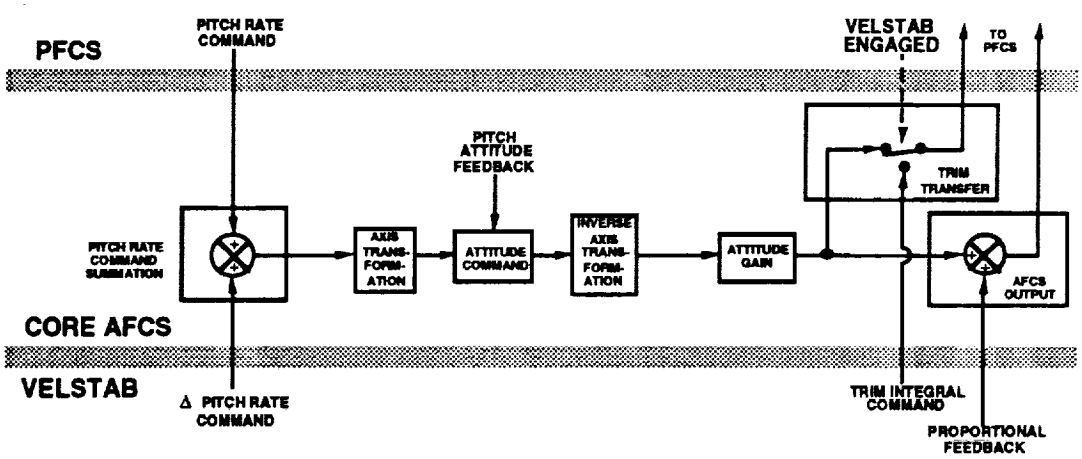

FIGURE 4. VELSTAB INTERFACE TO CORE AFCS

Proportional Feedback Module. The net effect of this module is to yield a washed-out command shaping which is desired when in velocity command mode.

The Attitude Model Command function (not shown) cancels the low frequency trim follow-up contained in the pitch rate command input to the Core AFCS. It also adds a washout to get the appropriate pitch rate transfer function for velocity command mode. The output of this module is sent to the Core AFCS Pitch Rate Command Summation Module (see Figure 4).

Some mode switching of the longitudinal and lateral axes of the PFCS control laws are necessary for implementing VELSTAB. In the longitudinal axis, the Command Model (see Figure 1) parameters are changed to provide attitude command instead of rate command when VELSTAB is selected. In the lateral axis, the Command Model changes from a pure rate command to an airspeed scheduled auto-moding of rate and attitude command at high and low speed respectively when VELSTAB is selected. Moding to rate command is inhibited if VELSTAB is in the groundspeed reference mode (low groundspeed or airspeed).

Low Speed Turn Coordination

When VELSTAB is engaged, the yaw axis control laws provide automatic low speed turn coordination (LSTC), which is enabled above 15 kts groundspeed. This mode provides ground-referenced coordination (i.e. lateral groundspeed is minimized in a turn). The pilot can momentarily interrupt LSTC via the Turn Coordination Release switch. The yaw axis reverts to lateral acceleration referenced turn coordination when not in groundspeed mode (see Figure 2).

In order to provide ground-referenced turn coordination, longitudinal groundspeed and commanded bank angle are used to calculate a feed-forward commanded turn rate. A feedback signal proportional to lateral groundspeed is also calculated. This correction drives the aircraft lateral speed to zero so that the aircraft heading aligns with its ground-track in a turn.

Altitude Hold

The altitude hold mode is engaged manually by pressing the Altitude Hold (ALTHLD) switch on the AFCS control panel. This mode also engages automatically when in VELSTAB and the Hover Hold mode is entered. A simplified block diagram of the collective axis, both PFCS and AFCS, is shown in Figure 5. The Altitude Hold mode allows the pilot to maneuver the Comanche vertically using either the left-hand displacement collective stick or the vertical axis of the right-hand sidearm controller. The normal procedure for using the displacement stick is to press and hold the Trim Release switch prior to moving the control. This switch disengages the ALTHLD logic, disables the sidearm vertical axis, and releases stick trim. This allows the pilot to move the stick freely in order to

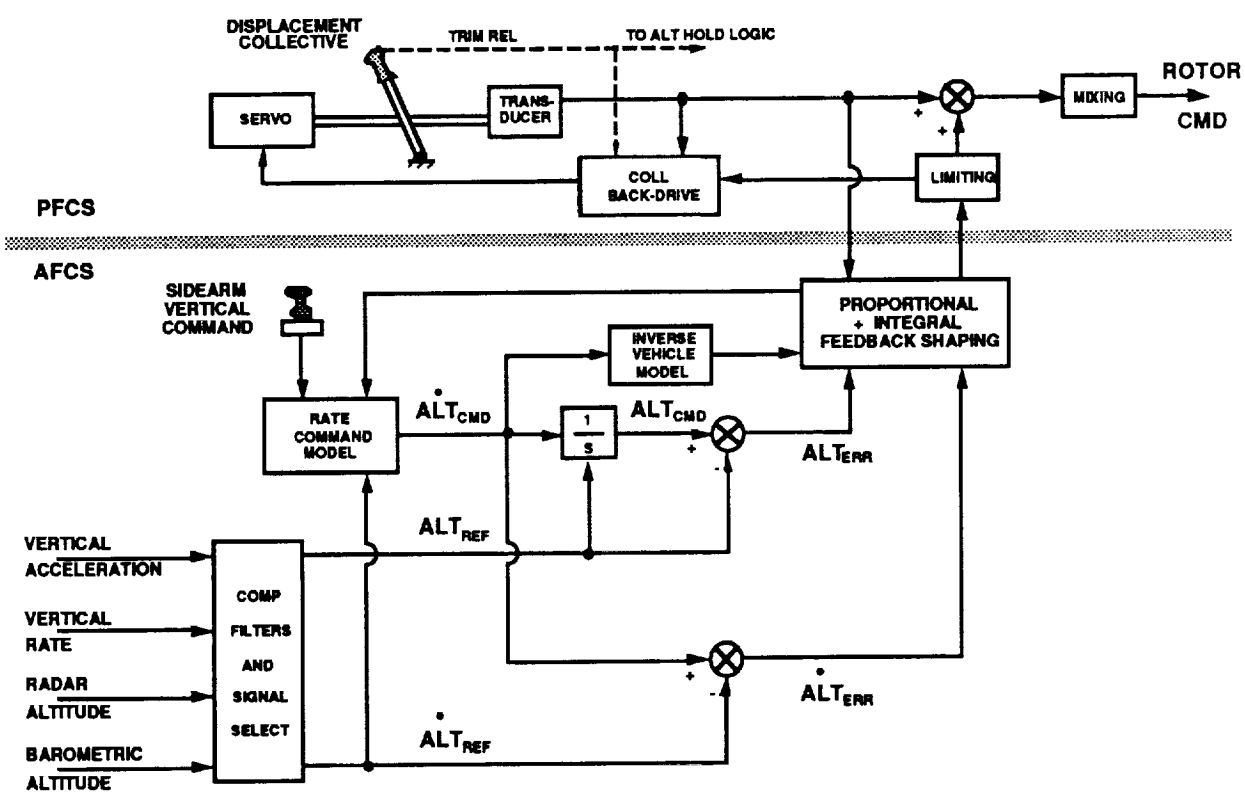

FIGURE 5. COLLECTIVE AXIS BLOCK DIAGRAM

maneuver the aircraft vertically. When the switch is released (trim engaged), the ALTHLD logic smoothly transitions the aircraft to level flight and then holds altitude. If the pilot moves the collective stick against trim without releasing trim, the ALTHLD logic senses this override condition and prevents the collective trim integrator from saturating. When the pilot ceases to override the control, the aircraft returns to its original altitude.

The response of the aircraft to vertical inputs applied to the sidearm controller is controlled by model following control laws similar to those found in the other axes of the control system. The response-type of the control laws is vertical rate command / altitude (height) hold (RC/HH). The maximum commanded vertical rate is ±600 ft/min.

The logic for switching between radar and barometric altitude references is a function of radar altitude, 'radar altitude reliable' logic (from the MEP), or pilot selected reference (from a MEP menu). The altitude reference switches from radar to barometric at 300 feet radar altitude, which coincides with the altitude at which the radar altitude symbology disappears from the HMD. The ALTHLD logic has 25 ft of hysteresis so that the reference won't flip back and forth when the aircraft is flying near this limit. The radar altitude reference is a complementary filtered signal combining the low frequency portion of radar altitude and the high frequency portion of inertial vertical acceleration. The control laws provide a transient-free transition from radar to barometric altitude reference.

PILOT EVALUATION

A simulation experiment was conducted to document pilot acceptance of the detailed design for the RAH-66 Comanche Selectable Mode control laws. The test was conducted in the Boeing Helicopters motion-base simulator. Full specification compliance testing will be subsequently carried out at the Sikorsky Full Mission simulator.

Simulation Facility

The Philadelphia simulation facility uses a 30' diameter fixed dome onto which the simulated visual scene is projected. The two-place simulator cab sits atop a 6 degree-of-freedom motion-base within the dome. The visual scene is corrected for relative motion between the cab and the fixed dome. The scene is projected through 4 light valves onto the dome surface. The computer image generator used to supply the visual is an Evans & Sutherland CT6 system. Note, the CT6 visual databases have been tailored specifically for the tasks simulated in this experiment. The ADS-33 task related gaming areas used for this test included: Accel / Decel, Pirouette, Sidestep, and Bob-up / down.

The Hover, Hover Turn, and Slalom tasks were evaluated in the vicinity of the Edwards AFB gaming area of the standard CT6 visual database. An attempt was made to provide the pilot with sufficient cues in order to ascertain task performance relative to the specified constraints.

The Degraded Visual Environment was simulated by restricting the pilot's field-of-view (FOV) to match the Helmet Mounted Display (HMD) FOV. This was done by placing a black felt mask over the helmet visor with holes placed in front of the HMD optics. A portion of the mask was also removed so that the pilot could view the head-down displays (moving map and pilot instruments). An additional piece of felt was placed between the optical elements to prevent cross-eye inter-visibility. Figure 6 is an illustration of the helmet. The test pilots estimated the field of view to be approximately 55° wide X 34° high which closely matches the Comanche design.

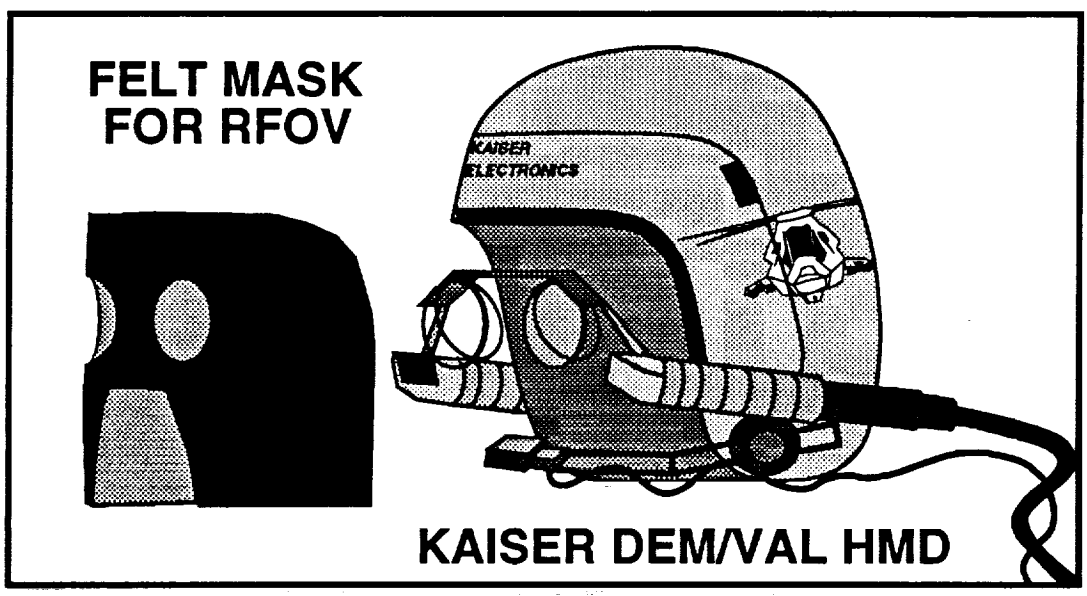

FIGURE 6. KAISER HMD WITH RESTRICTED FIELD OF VIEW

The Kaiser Helmet Mounted Display was used for all of the formal Selectable Modes testing. The HMD was cited as being essential to provide all of the cues necessary for the pilot to view all task constraints in the simulation environment. This was particularly true when the pilot's field-of-view was restricted to simulate the effects of flying with an HMD displayed visual image. With the RFOV, the pilots relied even more heavily on the HMD for cues.

The symbology displayed in the HMD (Figure 7) represented the LH DEM/VAL design. The symbology provides the pilot with the following heads-up information: horizon line, indicated airspeed, groundspeed vector (< 40 kt only) with acceleration cue and Hover Hold engagement cue (circle fills in), barometric altitude, rate of climb, radar altitude (< 300 ft only), pitch and roll attitudes, heading, and lateral acceleration (V > 40 kt only).

Cockpit Layout

The simulated Comanche cockpit featured a Lear Astronics 3 axis sidestick controller mounted next to the seat. The controller pitch, roll, and yaw orientation matches the Comanche design. The controller force characteristics were optimized during the PFCS / Core AFCS simulation testing. A DEM/VAL 4-axis controller, modified to approximate the force and displacement characteristics of the 4-axis controller design, was also available for several tasks.The collective stick was configured for the proper range of motion (6 inches) and was hydraulically backdriven to simulate the RAH-66 displacement collective force characteristics. The backdrive was also used to move the collective stick when the Altitude Hold mode was engaged.

Simulated Flight Conditions

All Selectable Mode evaluation was conducted at the following conditions: primary mission gross weight (PMGW - 10250 lb), mid CG (398.8 in), 2000 ft / 95 °F density altitude. The HMD was used for all tasks and the RFOV was used for formal pilot evaluation of DVE maneuvers.

Simulation Model

The math model representing the RAH-66 aircraft consisted of a classical (Bailey) rotor representation of the BMR, a fan-in-fin model of the FANTAIL™, and a simplified engine model. The control laws are modelled using the same algorithms that will be used in the flight aircraft. The flight control system redundancy was not modelled. Ideal sensors were assumed, i.e. sensor accuracy, dynamics, and filtering were not modeled.

Handling Qualities Assessment

During formal task evaluation, the pilot was the primary judge of task performance with respect to the desired parameters. Typically, this followed a series of familiarization sessions, during which both pilots and engineers scrutinized all aspects of the task performance relative to the specified maneuvers. Pilots did not commence the formal evaluation until they had become familiar with the control laws and the tasks. The Cooper-Harper Handling Qualities Rating Scale (Reference 2) was used to assess handling qualities with respect to the tasks evaluated.

TASK DESCRIPTIONS

The following tasks were evaluated during the simulation experiment. In general, the ADS-33C maneuvers were performed as written. *Any changes to the tasks are indicated in italics.*

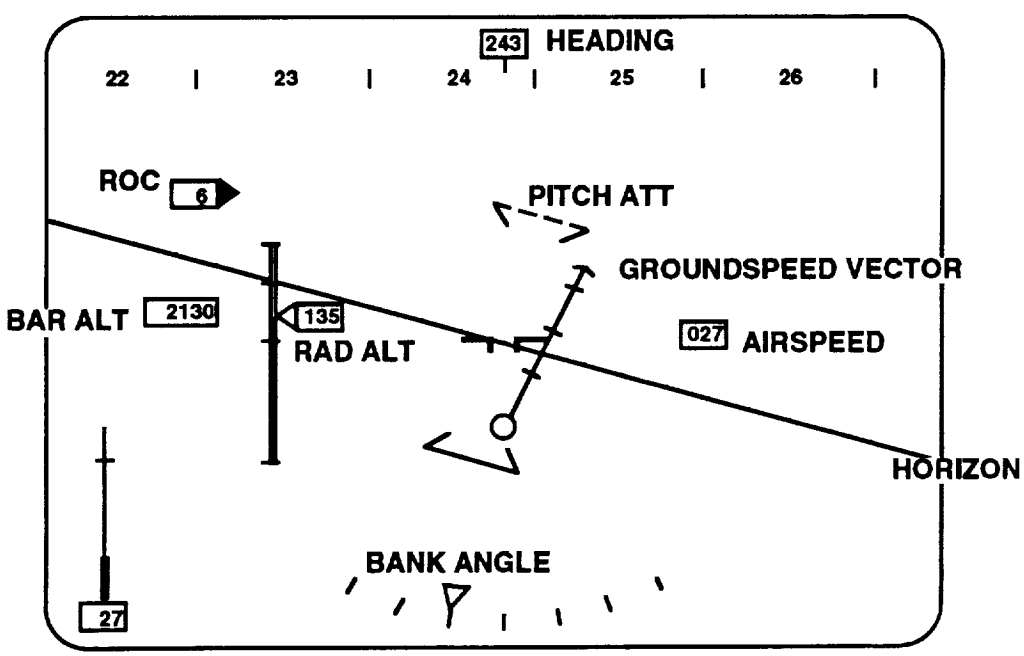

FIGURE 7. HMD SYMBOLOGY

ADS-33C DVE Maneuvers
Since the Comanche Selectable Modes were specifically designed to provide Level 1 Handling Qualities while performing the ADS-33C DVE maneuvers, these tasks were the primary focus of the simulation experiment. The following are only the task descriptions of the maneuvers. A complete description including desired performance is contained in Reference 1.

Hover. (ADS-33C 4.4.1) Maintain a steady hover at an altitude of not more than 6.1 m (20 ft) above the ground. *Starting approximately 50 to 100 ft from the desired hover point, fly to the hover point and establish a stable hover. Approach may be made from any direction. Perform maneuver with both velocity command / position hold (V < 5 kt) and attitude command / velocity hold (5 <V < 10 kt) response-types. Pilot ratings for task shall include acquisition of hover point.*

Hovering Turn. (ADS-33C 4.4.2) From a steady hover at an altitude of not greater than 6.1 m (20 ft), complete a 180 degree turn as rapidly as possible, in both directions.

Pirouette. (ADS-33C 4.4.4) Initiate the maneuver from a stabilized hover over a point on the circumference of a 30.5 m (100 ft) radius circle, marked on the ground, with the nose of the rotorcraft pointed at a reference point at the center of the circle, and at a hover altitude of approximately 3 m (10 ft). Accomplish a lateral translation around the circle, keeping the nose of the rotorcraft pointed at the center of the circle, and the circumference of the circle under the pilot station. Perform the maneuver in both directions.

Acceleration and Deceleration. (ADS-33C 4.5.1) Starting from a hover over a defined point, accelerate to a groundspeed of at least 50 knots, and immediately decelerate to hover over a defined reference point. *Deceleration may be delayed to adapt task to existing accel/decel course.* Maintain a constant altitude at or below 12.1 m (40 ft).

Sidestep. (ADS-33C 4.5.2) Starting from a stabilized hover, with the rotorcraft oriented 90 degrees to a reference line marked on the ground (or a series of objects such as traffic cones, etc.), initiate a lateral translation at approximately constant heading up to a speed of at least 17 kts. Maintain constant speed for approximately 5 sec, followed by a lateral deceleration to hover. The maneuver is to be conducted at a constant altitude at or below 9.1 m (30 ft). Maintain the cockpit station over the reference line. The maneuver shall be performed in both directions.

Bob-up and Bob-down. (ADS-33C 4.5.3) From a stabilized hover at an altitude of 3 m (10 ft), bob-up to clear an obstacle approximately 7.6 m. (25 ft) high to achieve a line-of-sight with a simulated threat. Simulate the attack using a fixed gun-sight. *Turn approximately 5 degrees to acquire the target.* As soon as the target is stabilized in the sight, perform a descent to the initial hover position.

Slalom. (ADS-33C 4.5.4) The maneuver is initiated in level unaccelerated flight, and in the direction of a line or series of objects on the ground. Maneuver rapidly to displace the aircraft 15.2 m (50 ft) laterally from the center-line and immediately reverse direction to displace the aircraft 15.2 m (50 ft) on the opposite side of the center-line. Return to the center-line as quickly as possible. Maintain a reference altitude below 15.2 m (50 ft) AGL. Accomplish the maneuver so that the initial turn is both to the right and to the left.

Other ADS-33C Maneuvers
The following ADS-33C tasks were performed during the Core AFCS evaluation but were judged to require the additional stabilization provided by the Selectable Modes in order to achieve Level 1 ratings.

Hovering Turn. (ADS-33C 4.1.2) From a steady hover at an altitude of not greater than 6.1 m (20 ft), complete a 180 deg turn as rapidly as possible, in both directions, with a wind of at least 20 knots from the most critical direction. If a critical direction has not been defined, the turn shall be completed with the wind blowing directly from the rear of the rotorcraft.

Rapid Bob-up and Bob-down. (ADS-33C 4.2.3) From a stabilized hover at an altitude of 3 m (10 ft), bob-up to clear an obstacle approximately 7.6 m (25 ft) high to achieve a line-of-sight with a simulated threat. Simulate the attack using a fixed gun-sight. *Turn approximately 5 degrees to acquire the target.* As soon as the target is stabilized in the sight, perform a descent to the initial hover position.

Additional Tasks
The following tasks were performed to demonstrate other system requirements, to evaluate critical control law elements, and to substantiate mission suitability.

Turn to Target. (LH BAFO System Specification, section 2.3.2.1.2.4.1 - Reference 3) From OGE and IGE conditions in winds from zero to 45 knots from any direction, yaw 180° over a point. It shall be possible to maintain the axis of turn within a circle whose radius is 1.5 m at zero knots and 3 m at 45 knots over a point. The maximum excursion in vertical position shall be less than ±.61 m at zero and ±1.22 m at 45 knots. Tolerance on heading shall be ±2 degrees. Time allowed to complete maneuver is 4.7 sec.

DVE NOE Mission. Perform a simulated NOE scout mission requiring the pilot to follow a prescribed path designated by waypoints on the HMD and head-down map display. The mission is to be flown in a DVE, with VELSTAB and Altitude Hold engaged.

Performance criteria:

- complete task within a predetermined time
- maintain altitude below 40 ft AGL
- maintain groundspeed at or below 25 kt (except for quick dash across open terrain)
- decelerate to a stabilized hover at each way-point

SIMULATOR TEST RESULTS

This section provides the results of the pilot simulation evaluation of the Selectable Mode control laws. A brief discussion of the degraded visual environment is presented including data from a UCE test. Data is in the form of Cooper-Harper handling qualities pilot ratings and summaries of the pilot comments with respect to each task.

Degraded Visual Environment

Restricted Field-of-View The helmet and method used to provide the restricted field-of-view (RFOV) are shown in Figure 6. The RFOV mask was qualitatively assessed by the pilots and found to be a simple but effective means of modeling the Comanche FLIR/II DVE. The RFOV was considered to be the most important characteristic of the DVE, forcing the pilot to make frequent head motions and eliminating any peripheral vision cues. The RFOV also made the pilots rely more heavily on the data provided by the HMD.

UCE Test During the simulation experiment, a UCE test was conducted in accordance with ADS-33C (except with a single pilot only) to check the simulator DVE with the restricted field-of-view. The purpose of this test is to rate the visual database and displays in terms of how "good", "fair", or "poor" the cues are for performing a subset of the mission tasks. UCE is a new concept to V/STOL HQ specs and is used to determine the required levels of stability and control augmentation needed to achieve desired levels of handling qualities as the mission environment changes.

The test, by spec, is conducted with a Level 1 rate command system. For this experiment, a simplified linear based model, the Helicopter Air Combat (HAC) simulation model with a rate command response-type (as defined by ADS-33C Section 3.2.5) was chosen. The pilot attempted to perform 6 of the ADS-33C DVE maneuvers to the desired levels of performance. The pilot provided visual cue ratings (VCRs) for each task as well as handling qualities ratings (HQRs). Using the procedure described in ADS-33C, the VCRs were used to calculate the Usable Cue Environments (UCEs) for each task. Figure 8 shows the spread of UCEs for the various tasks - UCE = 1 for hover, vertical landing, and accel/decel; UCE = 2 for bob-up; and UCE = 3 for sidestep and pirouette. The average UCE = 2.

Pilot comments and HQRs for each task performed in the UCE test are provided below. Keep in mind these ratings are for a rate command response-type in a DVE and were not done with the Comanche model.

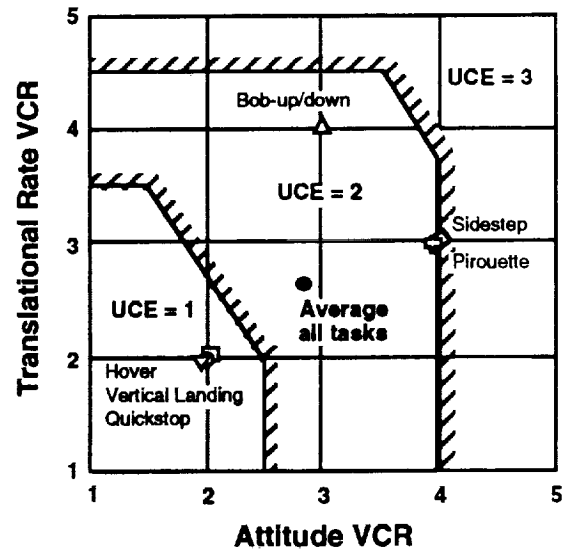

FIGURE 8. SIMULATOR UCE FOR DEGRADED VISUAL ENVIRONMENT

Hover task was rated HQR = 3. Primary source of workload was fore and aft drift which was difficult to detect unless the pilot turned his head to the side and looked downward. The HAC model was setup to trim at 0° pitch and roll attitude which complicated the task since the pilot was familiar with the RAH-66 hover trim attitudes of about +5° and -4° respectively. The HMD radar altitude and vertical speed symbology provided the necessary cues for the vertical axis.

Vertical landing task was also rated HQR = 3 and the comments from the hover task apply.

Bob-up/down was rated HQR = 7. The HQR and VCR ratings were primarily due to inadequate horizontal translation cues. In addition, the version of the HMD symbology used in the Boeing simulator did not provide sufficient velocity / acceleration cues due to a deadband of about ±1 ft/sec in the groundspeed velocity vector.

Sidestep maneuver was rated HQR = 7 (to right slightly easier). This task forced the pilot to turn his head to the side blanking out some of the symbology which is airframe referenced. Pilot could not meet desired performance due to high workload. The pilot commented that altitude hold (available in the Comanche Selectable Modes) would have made the desired performance achievable.

Accel/decel (quick-stop) task was rated HQR = 4. The cues were quite good but high workload degraded rating somewhat. Pilot noted a slight mismatch in the pilot station altitude and symbology, which added to the workload.

Pirouette was rate HQR = 6. High workload and loss of cues when the pilot turned his head to the side contributed to the rating. External vertical cues were

almost nonexistent; the pilot had to rely on his symbology.

The UCE test confirmed that the cue environment of the simulated DVE was indeed UCE 2/3 as expected. The HQRs of the evaluation tasks agree quite well with the ADS-33C predictions for a rate command system in various UCEs.

COMANCHE HQ TEST RESULTS

ADS-33C DVE Task Performance

Summary charts of the Cooper Harper Handling Qualities ratings for the DVE tasks are presented in Figures 9 and 10. The handling qualities of all of the ADS-33C tasks were rated Level 1 on the average by 4 or 5 pilots. All of the DVE maneuvers were evaluated with the pilots wearing the Helmet Mounted Display, with both an unrestricted and restricted-field-of-view. Average pilot ratings were only slightly higher for the maneuvers evaluated with the RFOV. The spread of ratings was noticeably higher.

Several pilot comments were generally true for all of the tasks (exceptions are noted). The Position Hold and Altitude Hold modes, when engaged, alleviated the pilot of virtually all workload in the pitch/roll and collective axes respectively. This made many of the tasks single axis maneuvers. Aircraft responses to control inputs were predictable and well damped, with no objectionable oscillations or overshoots. Pilot compensation, when needed, was due to inadvertent stick cross-coupling, but this compensation was not considered high enough to reduce the HQRs to Level 2. These difficulties appear to be due to the mechanical characteristics of the 3-axis side stick controller, since the force characteristics (low breakout, low force gradient, and high damping) were optimized for multi-axis input control feel with less system stabilization. However, the pilots all commented that they did not want the sidearm controller characteristics changed in any way.

Hover. As described previously, this task was expanded to include the acquisition of the hover position. Only the ratings for the maneuver performed with the VC/PH response are shown on the charts. Making the approach at a higher speed with the AC/VH response and then transitioning to Hover Hold only increased the pilot ratings approximately 1 HQR point (still well within Level 1). The hover task received average HQRs of 1.5 and 1.8 for the non-RFOV and RFOV respectively. All of the pilots commented that in this mode the vehicle response was very predictable and the workload was very low. Some of the pilots had a little difficulty determining if the desired hover position was being acquired to within the desired performance criteria and down graded their ratings slightly.

Hovering Turn. Hovering turn in zero wind received average HQRs of 2.5 and 2.4 for the non-RFOV and RFOV respectively. Several pilots degraded their ratings for the turn to the right because of inadvertent yaw to roll stick cross-coupling. Pilots found the yaw capture to be predictable for the yaw rates required for the DVE task, making the yaw axis

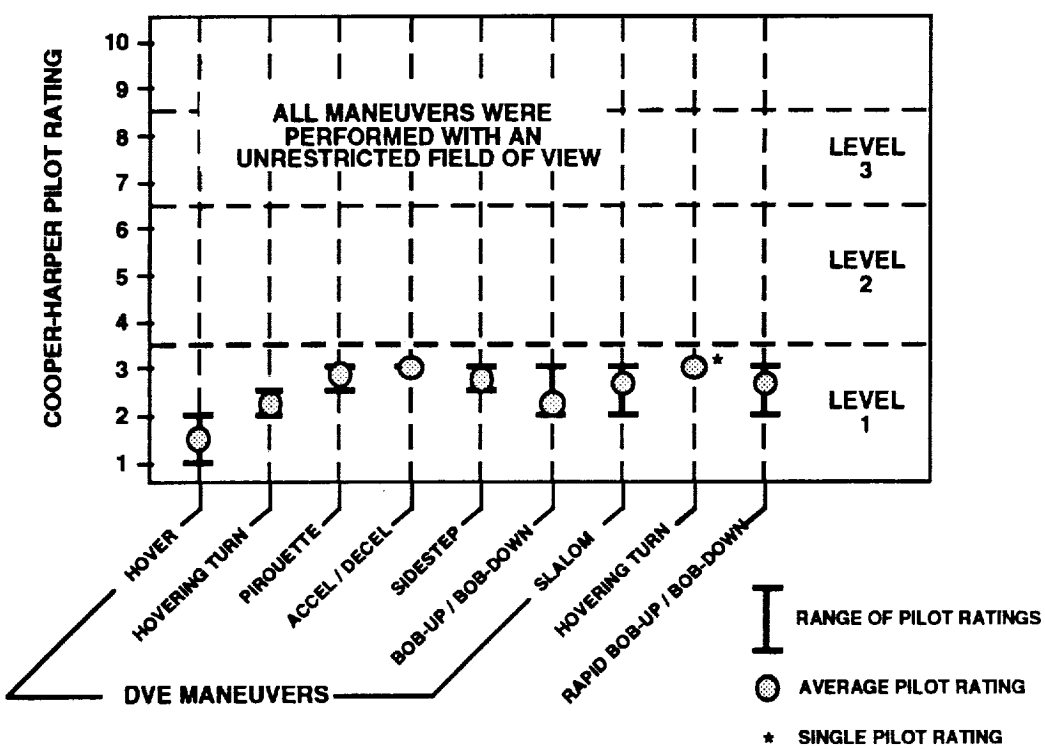

FIGURE 9. PILOT RATINGS OF ADS-33C TASKS - NO RFOV

workload low. Pilots commented that RFOV made it more difficult to pick up the final heading visually.

Pirouette. Pirouette received average HQRs of 2.875 and 3.25 for the non-RFOV and RFOV respectively. In general the pilots were able to perform this maneuver with relative ease (the Army pilot, who has considerable simulator experience, was particularly impressed). During most of the maneuver, the pilots could hold a nearly constant stick force and meet the desired performance. The time constraint for the task was not a problem. Nearly all of the pilots found it more difficult to perform this maneuver to the left although only one pilot split his HQRs (non-RFOV). Possible explanations for this difference include stick cross-coupling and right eye dominance.

Acceleration and Deceleration. Accel / decel received the same average HQRs of 3.0 for both the non-RFOV and RFOV. Most of workload was due to lateral inputs needed to correct the aircraft inherent lateral drift when accelerating and decelerating. Momentary / inadvertent entry into low speed turn coordination when pilot applied lateral inputs didn't effect workload but were disconcerting. The pilots were able to perform the task to the desired levels of performance without using the TC Release Switch (which was difficult to use due to poor grip placement). The pilots also had a little difficulty stopping precisely at the desired point because of the nose high attitudes used during the deceleration portion of the maneuver. This was particularly evident with the RFOV and could have been alleviated with better cues along the sides of the course.

Sidestep. The sidestep received average HQRs of 2.75 and 2.875 for the non-RFOV and RFOV respectively. The pilot ratings were down graded slightly due to cross-coupling of the pilot roll inputs into both the pitch and yaw axes. Several pilots perceived more coupling when applying inputs to the right (pushing on the stick with just their thumb) and split their HQRs. Optimally this would have been a single axis task.

Bob-up and Bob-down. The bob-up / down received the same average HQRs of 2.25 for both the non-RFOV and RFOV. This maneuver was performed with the displacement collective stick. The pilots learned to time the release of the collective trim switch (turning ALTHLD Off and On) to obtain desired altitude performance. Five degree turn to target (*an additional step not required by ADS-33C*) was performed easily. Position hold system kept position errors very small (< ±1.0 ft). Pilots commented that little or no compensation was required to correct for deficiencies. Desired duration of task (15 seconds) allowed the pilots to perform the maneuver smoothly and precisely.

Slalom. The slalom received average HQRs of 2.5 and 2.75 for the non-RFOV and RFOV respectively. The slalom was performed using low speed turn coordination (lateral inputs only). Pilots commented that low speed turn coordination was a major plus in reducing workload for this task. Some pilot ratings were degraded due to the slight tendency to cross-couple right roll into forward pitch inputs. This necessitated occasional pitch

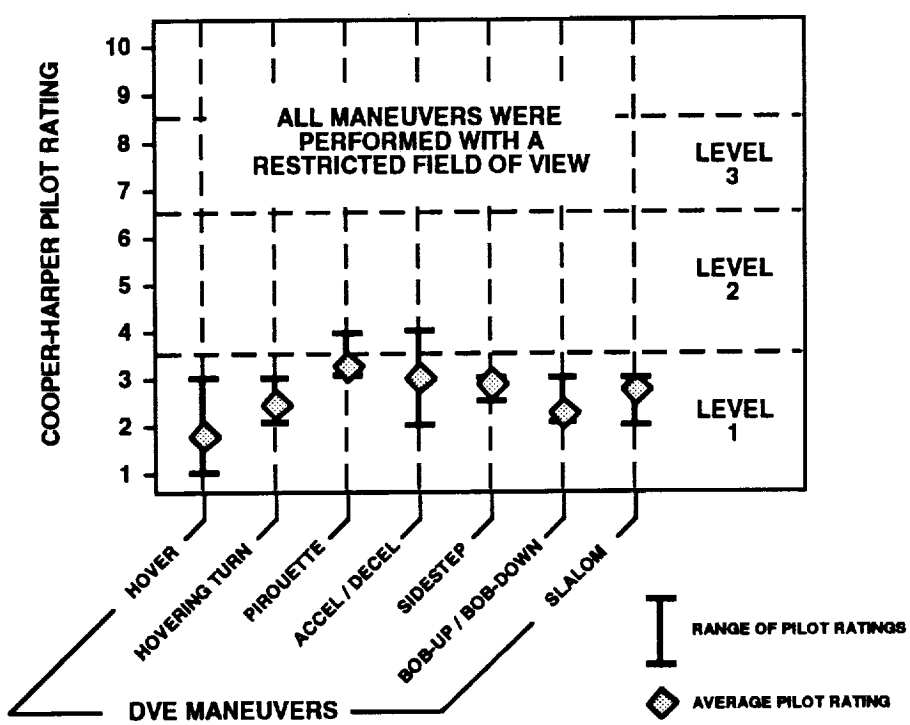

FIGURE 10. PILOT RATINGS OF ADS-33C DVE TASKS WITH RFOV

corrections to maintain airspeed. The pilots found the aggressiveness of the task to be somewhat high for a DVE task , however according to the Army pilot that participated in the test, the 50 ft lateral displacement from the center-line was intended as a minimum; the true intent was 50 - 75 ft (this would have reduced the aggressiveness). One pilot commented that the rating would be down graded if desired performance criteria existed on the recapture of the center-line ground track.

Other ADS-33C Maneuvers
These maneuvers were performed without the RFOV. The pilot ratings for these tasks are shown in Figure 9.

Hovering Turn. (non-DVE) The ADS-33 Precision Hovering Turn task was performed in 20 kt winds without the RFOV and received an HQR of 3 (Level 1). Some saturation of the lateral AFCS port limiter was experienced but the pilot found the resultant transients to be acceptable ("comfortable") and predictable. The pilot (using the visual cues from the hover pad) was required to apply some lateral compensation to meet the desired performance.

Rapid Bob-up and Bob-down. The rapid bob-up / down was performed without the RFOV and received average HQRs of 2.67. The maneuver was made a bit more difficult by the small turn to target when unmasked. The pilots commented that the Position Hold mode made Level 1 ratings achievable. The pilots had to fly the vertical axis manually for the whole maneuver because the Altitude Hold Mode bandwidth was not compatible with the level of vertical aggressiveness needed to perform this task in 8 seconds.

Additional Tasks (not performed with RFOV)
Turn to Target. The system spec turn to target maneuver was performed in both calm air and 45 kt winds; HQRs were not required. Three pilots evaluated this task, but only one pilot performed the task in the final control system configuration. In calm air the pilot was able to meet the system requirements consistently while applying only yaw inputs. Although not required, the pilot rated the maneuver an HQR = 3. The same maneuver in 45 kt winds was significantly more difficult. The AFCS port limits, sized for hardover recoverability, saturated during this maneuver and pilot compensation was required to hold position. Primary workload was in the lateral axis. With limited practice, the pilots could intermittently meet and consistently come close to meeting the specified performance. Table 1 are the last five data runs for a left-hand turn with a 45 kt head-wind. The hardest part of the maneuver was meeting the 4.7 second time limit. Graceful degradation of position hold when port saturation was encountered made the maneuver do-able since necessary pilot compensation was predictable. Attempts to perform this maneuver in the simulator in the Core AFCS mode were not as successful.

Total Time (4.7 sec allowed)	Max Pos. Error (10 ft allowed)	Max Alt. Error (4 ft allowed)
5.0	9	2
4.8	5	2
7.5	12	2
4.6*	9*	2*
5.0	8	2

* meets spec

TABLE 1. TURN TO TARGET TASK RESULTS

DVE NOE Mission. Pilots found the performance of the Selectable Modes to be appropriate for the NOE mission task. No deficiencies were identified. HQRs were not generally provided, but one pilot rated the vertical handling qualities Level 1 with Altitude Hold engaged. The Altitude Hold performance, although not terrain-following in nature (no look-ahead capability), was capable of maintaining satisfactory clearance in most cases. In general, ALTHLD exhibited no undesirable oscillations or drift. Radar altitude would typically return to the desired value after one over/undershoot following a sudden change in ground slope. Occasionally, the pilot had to assist the system (provide lead) when the ground was particularly steep or the aircraft was descending towards upward sloping terrain. Because the Altitude Hold response degraded in a predictable manner with no long term drift or oscillations, the pilot was able to quickly / easily determine when additional compensation was needed.

Groundspeed hold was found to be "very helpful and predictable" and staying out of the loop (not applying compensation) in this axis "works very well." The pilot judged the hover hold system to be "perfect" once established and was able to enter the hover hold gate even with moderate aggression. No changes were recommended.

The low speed turn coordination was of particular benefit in allowing the pilots to precisely fly around trees and other features with just roll inputs. The predictability of the LSTC engagement / disengagement contributed to the precision of the mode. One pilot stated that manual coordination would have been difficult with the RFOV due to a lack of relative motion cues. The RFOV forced the pilot to fly most of the course at 25 kt in order to have sufficient time to visually survey the terrain and chose a flight-path. The course had been designed for 40 kt cruise (without the RFOV). When hovering at each way-point, the pilot had to be less aggressive when doing pedal turns to make sure the tail was clear of obstructions.