UNITED STATES DISTRICT COURT
FOR THE EASTERN DISTRICT OF TEXAS
MARSHALL DIVISION

TEXTRON INNOVATIONS INC., Plaintiff, v. SZ DJI TECHNOLOGY CO., LTD., DJI EUROPE B.V., SZ DJI BAIWANG TECHNOLOGY CO. LTD., and IFLIGHT TECHNOLOGY COMPANY LTD. Defendants.	Case No. 2:22-CV-00351-RWS-RSP

DECLARATION OF PROFESSOR SOON-JO CHUNG

I, Soon-Jo Chung, declare as follows:

A. Introduction and Summary of Opinions

1. My name is Soon-Jo Chung. I have been retained by counsel for Defendants SZ DJI Technology Co., Ltd., DJI Europe B.V., SZ DJI Baiwang Technology Co. Ltd, and iFlight Technology Company, Ltd. (collectively, "DJI") to provide opinions concerning claim terms used in Claims 1-20 of U.S. Patent No. 8,332,082 (the "'802 Patent") and Claims 1-20 of U.S. Patent No. 8,682,505 (the "'505 Patent") that Plaintiff Textron Innovations Inc. ("TII") has asserted against DJI in the above-captioned litigation.

2. As set forth in detail below, it is my opinion that the following claim terms are indefinite:

- "initialization command logic" ('082 Patent, Claims 1, 11);
- "decoupl[e/ing]" ('082 Patent, Claims 1, 11);
- "selectively activat[es/ing]" ('082 Patent, Claims 1, 11);

- "a method to control flat yawing turns of an aircraft while maintaining a constant vector heading across a ground surface, the method comprising" ('082 Patent, Claim 11); and
- "continuously moves in a yaw direction while maintaining the constant vector heading" ('505 Patent, Claims 1, 11).

B. <u>Professional Background and Experience</u>

3. I am the Bren Professor of Control and Dynamical Systems at the California Institute of Technology and Senior Research Scientist at the NASA/Caltech Jet Propulsion Laboratory.

4. I received my bachelor's degree in aerospace engineering in 1998 from the Korea Advanced Institute of Science and Technology (KAIST), which is a national research university in Daejeon, South Korea. I received my Master of Science (S.M.) in aeronautics and astronautics and Doctor of Science (Sc.D.) in estimation and control, in 2002 and 2007, respectively, from the Massachusetts Institute of Technology in Cambridge, Massachusetts.

5. From 2009 to 2016, I was on the faculty of the University of Illinois at Urbana-Champaign, in Urbana, Illinois, first as an assistant professor and later as a tenured associate professor of aerospace engineering. I remain an adjunct professor at that institution. In 2016, I joined the faculty of the California Institute of Technology as an associate professor and a research scientist in the NASA/Caltech Jet Population Laboratory. Since 2018, I have been a full professor and, in 2019, was honored to be appointed to an endowed named professorship as a Bren Professor.

6. My research areas have included aerial robotics distributed air/space vehicles, and space autonomous systems, and in particular, the theory and application of

DJI Europe B.V. v. Textron Innovations Inc., IPR2023-01105
Textron Exhibit 2012, Page 2 of 61

control, estimation, learning-based control and planning, and navigation of autonomous vehicles.

7. I have authored or co-authored more than 200 scientific publications and multiple best paper award papers, including publications concerning autonomous vehicles and drones. I hold multiple patents in the area of flight control systems. I am an Associate Editor of the *Journal of Guidance, Control, and Dynamics* of the American Institute of Aeronautics and Astronautics (AIAA) and *IEEE Transactions on Automatic Control* of the Institute of Electrical and Electronics Engineers (IEEE), was an associate editor for *IEEE Transactions on Robotics*, and served as a lead guest editor for a special section on Aerial Swarm Robotics published in *IEEE Transactions on Robotics*. I have also served on the program committees of multiple conferences for AIAA and IEEE.

8. I have received numerous awards both for my research work—including the Air Force Office of Scientific Research (AFOSR) Young Investigator Award and the National Science Foundation CAREER Award—and also for my teaching and instruction.

9. My *curriculum vitae*, which provides additional details of my background and qualifications, as well as a list of my publications, is attached as Exhibit A.

C. <u>Compensation and Prior Testimony</u>

10. I am being compensated for my work in connection with this matter at an hourly rate of $1,000 for substantive work and $500 for any travel. My compensation is not contingent upon the nature of my advice and opinions, the results of any analysis performed by me, or the results obtained by DJI or its counsel during my engagement. I do not own any stock in DJI or TII and, to my knowledge, I have no financial interest in either of them.

11. During the past four years, I have not testified in any cases as an expert at trial or by deposition.

D. Materials Considered

12. The opinions I express in this report are based on my knowledge and experience, and also on documents I have reviewed and considered, including the asserted patents and their prosecution histories, and other documents cited herein.

E. Indefiniteness Standard

13. I am informed that U.S. patent law requires that the claims of a patent provide a person of ordinary skill in the art with reasonable certainty as to the objective boundaries of the scope of the claims. I am informed that a patent claim must particularly point out and distinctly claim the subject matter that the patent applicant regards as his or her invention. I understand that this is sometimes referred to as the definiteness requirement.

14. I understand that the definiteness requirement takes into account the inherent limitations of language and that some modicum of uncertainty does not necessarily render a patent claim invalid. I further understand, however, that a patent claim must be precise enough to afford clear notice of what is claimed, thereby apprising the public of what is still open to them; otherwise, there would be a zone of uncertainty which enterprise and experimentation may enter only at the risk of infringement claims.

15. I am informed the test to be used in assessing whether a patent claim is indefinite provides that a claim is invalid for indefiniteness if the claim, read in light of the patent's specification and prosecution history, fails to inform, with reasonable certainty, those of ordinary skill in the art about the scope of the claimed invention. I understand that indefiniteness must be shown by clear and convincing evidence,

requiring an abiding conviction that the truth of a contention is highly probable. I have considered and applied this test and standard in performing my analysis here.

16. I understand that indefiniteness is to be evaluated from the perspective of someone of ordinary skill in the art as of the priority date. I have been asked to assume that the priority date for both the ’505 and ’082 Patents is March 30, 2011. I note that this date appears on the faces of these patents, indicating when an international PCT application was filed.

F. <u>Person of Ordinary Skill in the Art</u>

17. I am informed that factors considered in determining the level of ordinary skill in the art include: (1) the type of problems encountered in the art; (2) the prior art solutions to those problems; (3) the educational level of active workers in the field; (4) the rapidity with which innovations are made; and (5) the sophistication of the technology. I further understand that the named inventors’ specific levels of skill are not relevant to this inquiry. I have considered these factors when reviewing the definition of a person of ordinary skill in the art (“POSITA”) proposed by DJI for the ’505 and ’082 Patents in its invalidity contentions, agree with it, and would have qualified as a POSITA at least as of March 30, 2011.

18. Accordingly, it is my opinion that a POSITA at the time of the patent application would have at least an equivalent of a bachelor’s degree from an accredited institution in mechanical engineering, aerospace engineering, electrical engineering, robotics or any other discipline covering principles of the design or operation of flight controls for helicopters, drones, or other rotary aircraft, as well as one year of experience working on the design, development, implementation, or operation of such technologies.

Significant experience could substitute for formal education, and significant education could substitute for work experience.

G. Background of Control Systems

19. The ’082 and ’505 Patents share essentially the same specification and purport to be directed to “[a]n aircraft and method to control flat yawing turns of the aircraft while maintaining a constant vector across a ground surface.” ’505 Patent, Abstract.[1] The named inventors noted that their alleged invention “related generally to flight control systems, and more particularly, to a flight control system having flight control laws which enable precise aircraft maneuvering relative to the ground.” *Id.* at 1:7-11.

20. In simple, generic terms, a control system is made up of interconnected components that achieve a desired response or motion of what is often referred to generically as a plant, which, based on a dynamical system model, such as aircraft dynamics, can have one or more inputs and outputs. Such a control system often includes an “actuator,” which is a device that allows the plant to receive the control input, typically by converting electrical signals that are generated by a “controller” into mechanical movement; a “sensor,” which provides information about the plant system output; and a “controller,” which is basically the brain of the system, which generally runs a computer program on an onboard computer to provide actuator signals. The desired outcome of a plant is often referred to as the “reference,” and the goal of a control system is to minimize

[1] The ’505 and ’082 Patents’ specifications are essentially the same, with some exceptions that are not material here, *e.g.*, the additional paragraph in the ’505 Patent under the heading “Detailed Description of the Preferred Embodiment,” which is not in the ’082 Patent. *See* ’505 Patent at 2:35-45. Unless otherwise noted, my citations to the patent specification are to the column and line numbers and figures of the ’505 Patent.

the error between the reference (*i.e.*, what is desired) and the plant output (*i.e.*, what is achieved).

21. For an aircraft control system, the "plant" is usually considered to be the aircraft; the "actuators" can include rotor engines and mechanical servos—*e.g.*, devices that move the control surfaces of a fixed-wing aircraft or the swashplate of a helicopter—to control the aircraft's movement; "sensors" can be used to measure position, velocity, acceleration, force, orientation, pressure, temperature, humidity, vibration, or other physical quantities. The reference signal for a "controller" embodies the commands of the pilot, who typically provides desired aircraft movements by using center and side sticks or pedals.

22. In aircraft in which the flight control system is fly-by-wire, the movements the pilot makes to the sticks or pedals to control the flight are converted to electronic reference signals, which are transmitted to the flight control computers that determine how to move control actuators, such as each control surface or collective and cyclic pitch angles of the swashplate, to execute the aircraft movement the pilot commanded. Such a system uses a flight control law code in a software algorithm that compares the reference signals generated by the movement of the sticks or pedals, made by a pilot, with the true movement of the aircraft, measured by sensors, to generate movements of the aircraft control actuators. Since the purpose of flight control is to achieve desired aircraft motions commanded by a pilot, a flight control system can also be used to assist the pilot to "counter disturbances caused by wind." '505 Patent at 1:21-25. The '082 and '505 Patents refer to a "control system" and focus on a software algorithm that translates the movement of the

control inputs (*e.g.*, stick or pedals) made by a pilot into movements of the aircraft control actuators.

23. A control system is used in an aircraft to control the aircraft movements in its six degrees of freedom. In other words, an aircraft can move in the X, Y, and Z directions while also rotating in three dimensions. In flight, an aircraft can move forward-backward, sideways, and up-down. It can also rotate around three different axes, pitch, roll, and yaw, thereby changing the aircraft orientation relative to the ground reference frame. Further, the yaw angle or aircraft heading can be different from the flight path angle across the ground. This may be due to sidewinds that cause "crabbing" and side slips, or it may be due to the configuration of the aircraft.

24. In order to describe such a system, six simultaneous equations of motion would be necessary, showing all these six-degree-of-freedom motions are inherently coupled, but by making certain mathematical assumptions, one can reduce the interdependencies of these six equations. Basically, the aircraft's motion can be treated more simply as two independent or "decoupled" motions (longitudinal and lateral-directional motions) or even as three decoupled motions (longitudinal, lateral, and directional motions). The longitudinal motions define forward and up-down translational

DJI Europe B.V. v. Textron Innovations Inc., IPR2023-01105
Textron Exhibit 2012, Page 8 of 61

motions as well as pitch-angle rotations. In contrast, the directional motion is simply the yaw (*i.e.*, heading angle) rotational motion. The lateral motions define the remainder of the six degrees of freedom.

H. Background of the ’082 and ’505 Patents

25. In their background sections, the ’082 and ’505 Patents describe what the named inventors understood to be problems that on-board pilots had experienced using traditional flight controls: “For traditional flight control systems, ground-referenced maneuvering (GRM) requires the pilot to make constant control inputs in multiple axes in order to counter disturbances caused by wind, as well as to remove the natural coupled response of the aircraft. The pilot workload during such maneuvers can become quite high since the pilot must sense un-commanded aircraft motions and then put in the appropriate control input to eliminate the disturbance. In a worst-case scenario, a pilot might be required to fly GRM in a degraded visual environment. With the lack of visual cues to detect off-axis motion, the pilot might accidentally fly into an external hazard while maneuvering in a confined space.” ’505 Patent at 1:20-32.

26. The named inventors also asserted that their invention “will enable seamless and transient free GRM. More specifically this invention will enable a pilot to use the directional controller to command flat yawing turns at low groundspeeds, while maintaining a constant vector across the ground. The seamless integration of this design requires no manual cockpit switches to select a Constant Vector Flat Turn (CVFT) mode. Instead, the control laws will automatically adjust pitch and roll attitude to keep the aircraft moving in the same direction at a constant speed whenever the pilot inputs a directional command at low speed. The control system of the present application enables seamless and transient free GRM without the need for manual cockpit switches. The control system

utilizes relative ground speed difference to automatically control pitch and roll attitudes so that the aircraft will maintain a constant vector during a low speed flat turn. The control system also allows the pilot to complete a CVFT with minimal workload since the ground vector will automatically be maintained by the control laws without the pilot having to use cockpit switches to change modes."[2] '505 Patent at 2:46-65.

27. With respect to the control system, Figures 6, 7, and 8 of the patents provide schematic diagrams of the control system architecture for a set of longitudinal, latitudinal, and directional control laws. A control "architecture" is generally understood in engineering to mean a description of the configuration of the component parts of a control computer system and control algorithms, as in the '505 and '082 Patents' figures. An architecture can be a high-level description that does not provide the details concerning the implementation of the control system or its flight controller methods. Figures 6 and 7 are reproduced below.[3]

---

[2] I note that part of this quoted passage is different in the '082 Patent. The differences are underlined in the following: "As a result of this auto-moding logic, the control laws will automatically adjust pitch and roll attitude to keep the aircraft moving in the same direction at a constant speed whenever the pilot inputs a directional command at low speed. The auto-moding logic of the present application enables seamless and transient free GRM without the need for manual cockpit switches." '082 Patent at 2:41-48. These differences, however, are not material to my analysis here.

[3] The "control system" of Claim 1 of the '082 Patent focuses on a software algorithm and appears to treat the "sensor" and "actuator," which are shaded in these figures, as separate claim elements. As claimed, the "control system" is in "data communication" with the "sensor" and "actuator." The "control system" is claimed to have, among other things a "model," lateral and longitudinal "control architectures," and "initialization command logic."

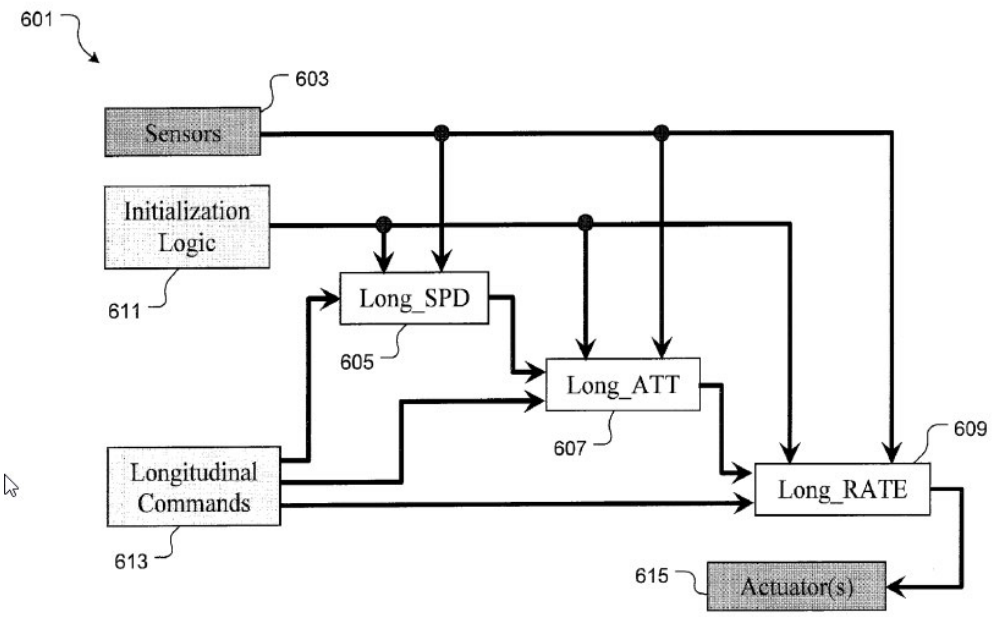

FIG. 6

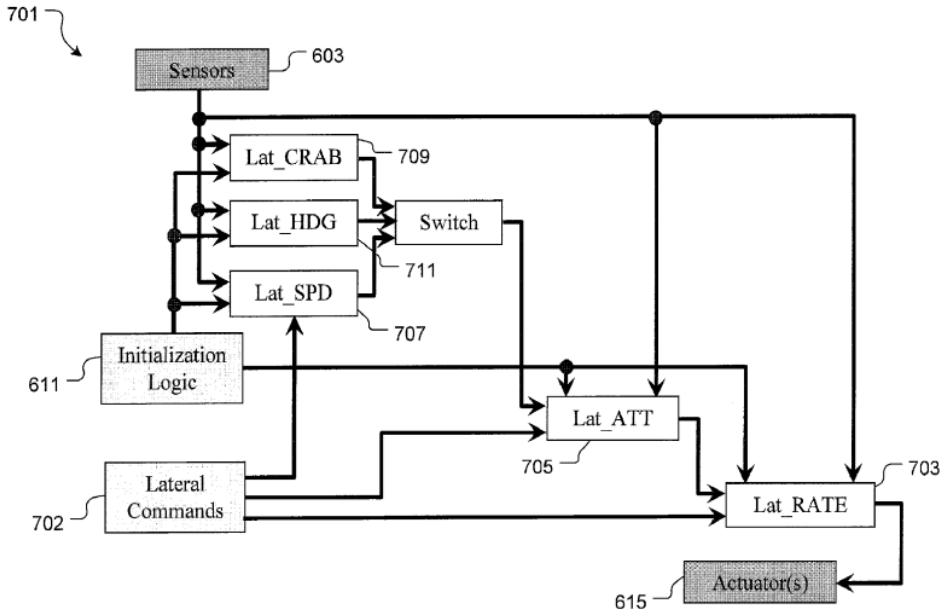

FIG. 7

DJI Europe B.V. v. Textron Innovations Inc., IPR2023-01105
Textron Exhibit 2012, Page 11 of 61

I. "Initialization Command Logic" ('082 Patent, Claims 1, 11)

28. Claim 1 of the '082 Patent claims an "aircraft" with a "sensor," "actuator" and "control system," and requires that the control system have "initialization command logic." This is not a term of art in the industry and a POSITA would not know innately what is being referred to by "initialization command logic."

29. From the language of Claim 1, a POSITA would understand that this "initialization command logic" is "in data communication with the lateral control architecture and in data communication with the longitudinal control architecture" and that the claim requires that it "selectively activates the lateral control architecture for controlling the lateral motion of the aircraft and selectively activates the longitudinal control architecture for controlling the longitudinal motion of the aircraft."[4] Claim 11 provides no additional information as compared to claim 1; it only repeats the description of the initialization command logic as in data communication with the lateral and longitudinal control architectures. This provides no guidance as to the meaning of the term.

30. The specification does not use the term "initialization command logic" at all; it does refer to "initialization logic 611" in Figures 6-8, but notes only that it is associated with the various latitudinal, longitudinal, and directional architectures. '505 Patent at Figs. 6-8, 5:7-19, 5:53-67, 6:27-34. The text of the specification merely notes that the "initialization logic 611" is "adapted for determining which loop is active in each axis based on flight conditions and pilot control inputs" and "will also re-initialize inactive loops in order to eliminate control jumps when switching between the loops to provide seamless and transient free mode changes." '505 Patent at 5:12-19. There is no mention

[4] As discussed below, the patent provides no guidance on what "selectively activates" means.

of what it means to "initialize" or "re-initialize" an architecture (or even a loop), what algorithms or events might trigger such initialization or re-initialization, or what the inputs of this logic are. The Abstract states only that "[t]he initialization command logic automatically activates the lateral control architecture and the longitudinal control architecture to maintain a constant vector across the ground whenever a directional control input is made at low speed." There is no substantive discussion of this term in the prosecution history.[5]

31. It is my opinion that the term "initialization command logic" is indefinite. To the extent the '082 Patent describes "initialization command logic," it describes it in terms of its function and only in vague terms, such that a POSITA would not be able to understand the scope of the claim with a reasonable certainty. There is no mention of the structure or other attributes of "initialization command logic," so a POSITA would be unable to determine whether a control system has the claimed "initialization command logic." In my opinion, this term is indefinite.

J. "Decoupl[e/ing]" ('082 Patent, Claims 1, 11)

32. Claim 1 of the '082 Patent states that the control system of the claimed invention also has "a model adapted to decouple the directional movement of the aircraft into a lateral equation of motion and a longitudinal equation of motion." Claim 11 states that its allegedly invented method comprises "decoupling the directional movement of the aircraft into the lateral equation of motion and the longitudinal equation of motion with the

[5] I have also considered the definition of "logic" that TII has provided from Crocker, Dictionary of Aviation, at 139 (2d ed. 2007) (TII_0005585). Although I do not generally disagree that the definition offered there can be a plain and ordinary meaning of the word "logic"—"electronic circuits which obey mathematical laws"—it does not address the issues with the larger phrase "initialization command logic" as I have discussed.

model." While the term "decouple" does have a meaning in the art—and, in particular, when decoupling directional movement of the aircraft into lateral and longitudinal equations of motion, it would mean that the equations are separated such that they can be independently evaluated—the claims and specification here are unclear as to *what* is being decoupled. The specification's use of the term would suggest to a POSITA that the named inventors intended to impart a meaning by which there may be some unknown amount of remaining coupling that is permissible after the equations of motion are "decoupled," such that they are not entirely independent of each other. However, there is no objective boundary as to how much residual coupling between the equations, if any, would be permissible to still practice the "decoupled" limitation. The prosecution history offers no insight on this issue since "decoupling" was not substantively discussed.

33. *First*, it is unclear what is being decoupled and, thus, what it means to decouple in that context. Claim 1 requires that *the model* "decouple[s] the directional movement of the aircraft." And Claim 11 requires "decoupling" of "the directional movement of the aircraft . . . *with the model*." But in the only passages of the specification that discuss "decoupling," it is *the model itself* that is "decoupled":

> Since the aircraft model matrices are large and contain coupling terms of lateral and longitudinal motions within the matrices, it is difficult to determine the best performance control gains for all at the same time. In order to overcome these issues, the linear model of aircraft performance is decoupled first. After the aircraft model is decoupled to lateral and longitudinal equations of motion, the effect of coupling terms between lateral and longitudinal motions can be reduced to a minimum, thus stabilizing the system.[6]

[6] I note that the phrase "linear model of *aircraft performance*" is not a term used in the art, and it is unclear what is being referred to. Moreover, with respect to the last sentence of this quoted passage, it appears to assume the conclusion and is nonsensical. In order to decouple equations of motion, one needs first to assume that the effects of coupling terms are small or negligible.

34. It is unclear how one would use the model itself to decouple the directional movement of the aircraft and the specification offers no explanation. It is also unclear how or in what way decoupling the model into lateral and longitudinal equations of motion reduces the *effects* of coupling terms between lateral and longitudinal motions. As a practical matter, decoupling equations is a standard mathematical operation, but in real 3D aircraft flight, all the motions are inherently coupled and hence accomplishing perfectly decoupled motions of longitudinal, lateral, and directional motions is impossible or extraordinarily difficult. So, these are two very different operations. A POSITA would not know with reasonable certainty how, whether, or to what extent a model has decoupled the directional movement of the aircraft.

35. *Second*, the specification states that "to determine the best performance control gains for [lateral and longitudinal motions] at the same time[,] … the linear model of the aircraft performance is decoupled first. After the aircraft model is decoupled to lateral and longitudinal equations of motion, *the effect of coupling terms* between lateral and longitudinal motions can be *reduced to a minimum*, thus stabilizing the system." '082 Patent at 4 (emphasis added). The specification offers no guidance on the extent to which the equations of motion may remain coupled and still be considered "decoupled" such that a control system's model could be deemed to fall within the claims. A POSITA would not be able to make that determination with a reasonable certainty. In my opinion, this term is indefinite.

K. <u>"Selectively Activat[es/ing]" ('082 Patent, Claims 1, 11)</u>

36. A third attribute that Claims 1 and 11 of the '082 Patent identify as part of the alleged invention is selective activation. Claim 1 it states that the control system of the aircraft has an initialization command logic that "selectively activates the lateral control

architecture for controlling the lateral motion of the aircraft and selectively activates the longitudinal control architecture for controlling the longitudinal motion of the aircraft." Claim 11 similarly states that the method comprises "selectively activating the lateral control architecture and the longitudinal control architecture with the initialization command logic." The Abstract uses similar language but uses the phrase "automatically activates" rather than "selectively activates." There is no discussion of the terms "selectively activates" or "selectively activating" in the specification and there is no substantive discussion in the prosecution history. These terms are also not terms of art in the industry that a POSITA would recognize and understand.

37. It is my opinion that the term "selectively activat[es/ing]" is indefinite. The Claims require that there is "selective activat[ion]" of the lateral and longitudinal control architectures, but nothing illuminates what that means, and it would make no sense to have either or both of those architectures somehow be rendered "inactive" during flight. To the extent one might suggest that "activate" means turning "on," that indicates that there must also be an "off" state. But that is nonsensical because turning off either the lateral or longitudinal control would make the movement of the aircraft nearly impossible to control. "Selectively" creates additional issues since it is unclear what parameters form the bases of the selected activation or whether the selected activation is one of degree, a binary choice, or a choice from a number of (unidentified) options. None of these details are set forth anywhere in the specification or prosecution history. As a result, a POSITA would not be able to tell the bounds of this term with a reasonable degree of certainty. In my opinion, this term is indefinite.

L. **"A method to control flat yawing turns of an aircraft while maintaining a constant vector heading across a ground surface, the method comprising" ('082 Patent, Claim 11)**

38. Claim 11 claims "[a] method to control flat yawing turns of an aircraft while maintaining a constant vector heading across a ground surface." I understand that TII has proposed that this phrase should be given its plain and ordinary meaning. Under such a construction, it is my opinion that this phrase is indefinite. Claim 11 claims the invention of a method that is not possible to achieve, leaving a POSITA unable to define it. The phrase "constant vector heading" is not used in the body of the specification (although it appears in the Abstract without explanation) and is not itself a term of art used in the industry.

39. A POSITA would understand a "constant vector" to refer to the state of having a constant direction and constant magnitude, and that a "heading" means the direction in which the longitudinal or X axis of an aircraft is pointed or, in other words, where the nose of the aircraft is pointed.[7] Those are known terms of art. The named inventors actually use the phrase "heading" in a way that is consistent with the plain and ordinary meaning, noting that there may be a difference between an aircraft's heading and the direction of its ground path:

> Traditional flight control law designs do not provide the pilot with an easy way to control aircraft crab angle during GRM. Crab angle is defined as the angle between the aircraft's heading and its actual ground path. With these prior designs, adjusting crab angle while maintaining ground track

[7] While some rotorcraft, even drones that appear to be otherwise symmetrical, do not have an obvious physical "nose" like a helicopter, an x-axis is assumed and influences the design, including, for example, the axis along which there is any elongation of the body, the placement of the forward-facing sensor gimbal, and the placement and orientation of any sensors (*e.g.*, the Inertial Measurement Unit or "IMU," which measures 3-axis accelerations and 3-axis angular rates). It would also dictate the design of the flight controller.

took considerable pilot concentration, since the pilot had to coordinate inputs to both the lateral and directional controllers.

'505 Patent at 1:33-40.

40. This is also consistent with, for example, the description of Figure 4, which is reproduced with annotations below. The specification notes:

> Referring now to FIG. 4 in the drawings, a schematic view of aircraft **201** is shown changing flight *heading* from sideward flight to forward flight. In the exemplary embodiment, the CVFT control system is utilized such that aircraft **201** changes *heading* from a forward groundspeed VX of about 0 knots and a sideward groundspeed between 10-35 knots to a forward groundspeed between 10-35 knots and a sideward groundspeed about 0 knots. . . . [S]tep 2 shows aircraft **401** [sic] traveling in a sideward groundspeed between 10-35 knots, as depicted with arrow **D2**. . . . Step 3 depicts application of the CVFT control system, wherein aircraft **201** turns 90 degrees for changing the *heading* of aircraft **201**.

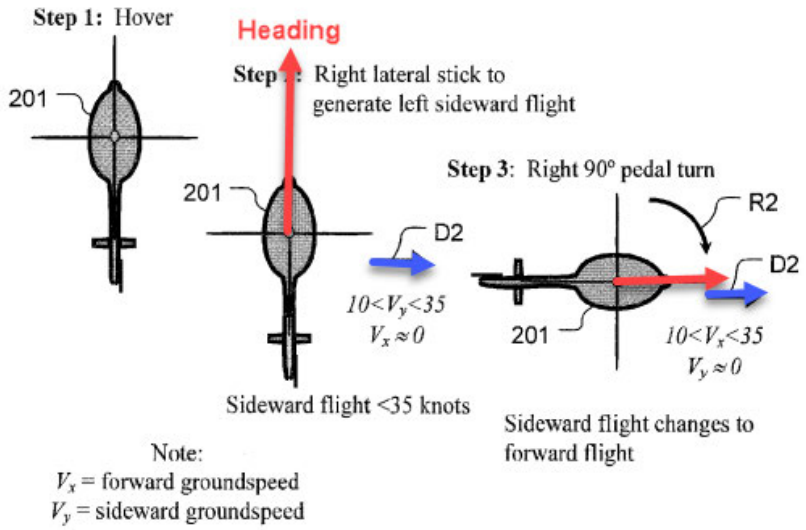

FIG. 4

Id. at 4:15-17.[8]

[8] With respect to Figure 5, the specification states that "a left 90 degree petal [sic] turn is applied to rotate aircraft **201** such that the forward flight of aircraft **201** changes to a sideward flight heading." '505 Patent at 4:28-31. This appears to equate a crab angle of 90 degrees with what is refers to as a "*sideward* flight heading," that is, its heading is sideways to the ground path or flight path of the aircraft.

41. Additionally, Figure 10, which purports to represent the "control law flow chart for the control system," *see* '505 Patent at 2:19-20, describes the relationship between this yaw movement (**R1**) and the crab angle of aircraft **201**:

> This design enables the pilot to command and hold any crab angle around the 360 degree circle, while the aircraft continues to move across the ground on a constant vector. As shown, when the pedal stops, if the crab angle equals 0 degrees, then aircraft **201** travels in pure <u>forward flight</u>; if the crab angle is 90 degrees, aircraft **201** travels in pure <u>right side flight</u>; if the crab angle is 180 degrees, then aircraft **201** travels in pure <u>aft flight</u>; and, if the crab angle is 270 degrees, then aircraft **201** travels in pure <u>left sideward flight.</u>

'505 Patent at 59-67 (underlining added).[9]

42. Accordingly, a "constant vector heading," under its plain and ordinary meaning, would refer to the movement of an aircraft at a constant heading, which is in the direction the nose is pointed, and at a constant groundspeed.

43. However, the claim requires, within this same phrase, that the aircraft also perform "yawing turns" or rotate in the yaw direction. This cannot be physically achieved while also maintaining a constant vector heading because any rotation in the yaw direction necessarily rotates the nose of the aircraft in the yaw direction thereby changing the heading of the aircraft. This is shown below in an annotated version of Steps 1 through 4 of Figure 2, which shows a helicopter moving in the yaw direction (**R1**) by 90 degrees in each step, which changes its heading by 90 degrees in each step. The crab angle, as described

[9] This description is different from one is seen in Figure 2 since Figure 2 indicates that a crab angle of 90 degrees results in "left sideward flight" not, as Figure 10 indicates, "right sideward flight." There is a similar discrepancy with the descriptions of "right sideward flight" and "left sideward flight" when the crab angle is 270 degrees.

in the quoted passage above, would be the difference between the flight path (**D1**) and the heading (red arrows).

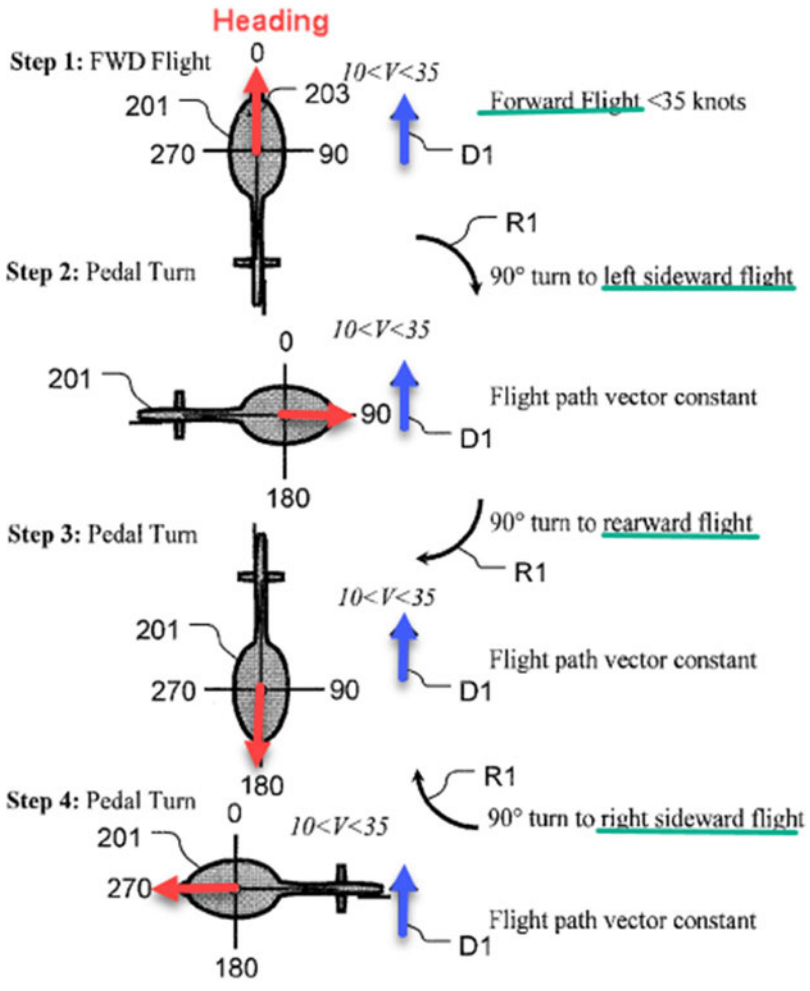

44. Assigning a plain and ordinary meaning to the terms "constant vector heading" and "yawing turns" renders this phrase incomprehensible. A POSITA would not understand what it means or understand, with a reasonable degree of certainty, the scope of this claim language.

45. Additionally, I note that, during the prosecution of the '505 Patent, the named inventors overcame a rejection of their claims by adding the limitation "continuously moves in a yaw direction while maintaining the constant vector heading,"

explaining that the amendment was supported by disclosures in "paragraph 0013 ['505 Patent at 3:9-19] and FIG. 2 in the drawings" and noting that, "[a]s shown, the aircraft moves in a constant heading indicated by arrow **D1** while the aircraft turns in the yaw-direction." *See* Applicants' Amendment & Remarks, at 6 (Oct. 16, 2013). Figure 2 is reproduced above with annotations.

46. With respect to Figure 2, the specification appears to use "*flight heading*" and "*forward heading*" to mean something similar to what one would refer to as the ground path or flight path. *See, e.g.*, '505 Patent at 2:7-10, 3:9-46, 3:62-4:31 (emphasis added). For example, the specification states that Figure 2 shows that the aircraft **201** turns "in a complete 360 degree yaw movement **R1**, stopping every 90 degrees, and *without changing* . . . the *flight heading* of aircraft **201**, as represented with arrow ***D1***," *id.* at 3:12-15, and that "each time the control system is utilized, aircraft **201** rotates 90 degrees while maintaining a constant *forward heading*."

47. But the inconsistent (and improper) use of "heading," both in the specification and in the '505 Patent's prosecution history, only adds to the confusion given the patent's other disclosures, discussed above.

48. To be clear, however, "heading" cannot be understood to have a meaning that embraces *both* the movement in the direction of the aircraft's nose *and* the aircraft's actual ground path or flight path. This would be nonsensical and would only confuse a POSITA more with regard to the objective boundaries of the patent claims.

M. <u>"Continuously moves in a yaw direction while maintaining the constant vector heading" ('505 Patent, Claims 1, 11)</u>

49. Claims 1 and 11 of the '505 Patent suffer similar indefiniteness defects as with the '082 Patent's use of "A method to control flat yawing turns of an aircraft while

maintaining a constant vector heading across a ground surface, the method comprising," which I discuss in Section L above. Claim 1 of the '505 Patent is directed to a control system "wherein the aircraft continuously moves in a yaw direction while maintaining the constant vector heading." And Claim 11 of the '505 Patent claims a method with a similar limitation. For the same reasons as discussed in Section L above, it is my opinion that these phrases are indefinite.

CONCLUSION

50. In my opinion, the above referenced terms are indefinite. I reserve the right to consider additional materials and to amend or supplement my opinions in light of additional information that may come to my attention, including any critique of my opinions advanced by or on behalf of TII. If called to testify at trial, I may rely on visual aids and demonstrative exhibits that demonstrate the bases of my opinions, including, for example, excerpts from patent specifications and prosecution histories, as well as diagrams, videos, and animated or computer-generated graphics.

I declare under penalty of perjury that the foregoing is true and correct to the best of my knowledge.

Executed: October 27, 2023
La Cañada Flintridge, California

Soon-Jo Chung

Exhibit A

Soon-Jo Chung, Sc.D.
Bren Professor of Control and Dynamical Systems, California Institute of Technology
http://aerospacerobotics.caltech.edu

1. Education

1. MIT, Doctor of Science (Sc.D.) in Estimation and Control, Minor in Optics, June 2007.
   Thesis supervisor: David W. Miller and Co-advisor: Jean-Jacques E. Slotine
2. MIT, Master of Science (S.M.) in Aeronautics and Astronautics, September 2002.
   Thesis advisor: David W. Miller
3. Korea Advanced Institute of Science and Technology (KAIST), Bachelor of Science (B.S.) in Aerospace Engineering, *Summa Cum Laude*, Rank 1/120, Feb. 1998.

2. Primary Academic Positions

1. Bren Professor of Control and Dynamical Systems, 12/2022-present
2. Bren Professor of Aerospace and Control and Dynamical Systems, 3/2021-12/2022
3. Bren Professor of Aerospace, California Institute of Technology, 2/2019-3/2021
4. Professor of Aerospace, California Institute of Technology, 12/2018-2/2019
5. Senior Research Scientist, Caltech/NASA Jet Propulsion Laboratory, 6/2022-Present
6. Research Scientist, Caltech/NASA Jet Propulsion Laboratory, 12/2016- 6/2022
7. Associate Professor of Aerospace and Bren Scholar, California Institute of Technology, 8/2016-12/2018
8. Associate Professor, Department of Aerospace Engineering, University of Illinois at Urbana-Champaign, 8/16/2015-8/21/2016, Adjunct Associate Professor (8/2016-present)
9. Assistant Professor, Department of Aerospace Engineering, University of Illinois at Urbana-Champaign, 8/1/2009-8/15/2015
10. Assistant Professor, Department of Aerospace Engineering, Iowa State University, 7/1/2007-7/31/2009

3. Other Academic and Industry Positions

1. Affiliated Faculty in Control and Dynamical Systems (CDS), Computing + Mathematical Sciences (CMS), California Institute of Technology, 10/2016-2/2021
2. Associate Professor, Coordinated Science Laboratory, University of Illinois at Urbana-Champaign, 8/16/2015-8/2016
3. Beckman Fellow, Center for Advanced Study, University of Illinois at Urbana-Champaign, 2014-2015
4. Member of Guidance & Control Analysis Group as JPL Summer Faculty Research Fellow (6/2010-8/2010, 6/2011-8/2011, 6/2013-8/2013) and Faculty Affiliate (7/2012-8/2012, 6/2014-8/2014), Caltech/NASA Jet Propulsion Laboratory
5. Assistant Professor, Coordinated Science Laboratory, University of Illinois at Urbana-Champaign, 1/1/2012-8/15/2015
6. Courtesy Assistant Professor, Department of Electrical and Computer Engineering, Iowa State University, 2008-7/31/2009
7. Engineering Consultant, Nightsky Systems, Raleigh, NC: Sub-contractor, NASA Goddard Space Flight Center (GSFC) Lunar Reconnaissance Orbiter (LRO), (4/07-9/07)
8. Graduate Research Assistant, MIT Space Systems Laboratory, Cambridge, MA, (9/2000-8/2002) and (2/2003-4/2007)

9. Full-time Software Development Consultant, Mide Technology Corporation, Medford, MA: Integrated Modeling software for NASA's future stellar interferometry missions. NASA SBIR Phase II, (6/04-8/04)
10. Research Engineer, National Optical Astronomical Observatory (NOAO), Tucson, AZ: Giant Segmented Mirror Telescope (GSMT) project at the New Initiative Office (NIO)-NOAO, (9/02-01/03)
11. Head Teaching Assistant, MIT Aero/Astro Space Systems CDIO (Conceive-Design-Implement-Operate) Product Development Courses, (Spring 2001, Fall 2001, Spring 2002)
12. Mandatory military service as a Korean Augmentation To the US Army (KATUSA), Translator and Administration, 2nd Infantry Division, 8th US Army, (4/1998-6/2000)
13. Research Intern, Korea Aerospace Research Institute (KARI), Daejeon, South Korea, Winter 1997

4. Honors, Awards, and Professional Recognition

a. Research Honors and Awards (Major Honors in Bold)

- **20023 IROS Best Paper on Agri-Robotics Finalist Award,** IEEE/RSJ International Conference on Intelligent Robots and Systems
- **AIAA Best Graduate Student Paper Award, AIAA Guidance, Navigation, and Control Conference, 2023 AIAA Scitech,** (as co-author and advisor). Student author names: James Ragan and Ben Riviere.
- **NASA Breakthrough, Innovative and Game-changing (BIG) Idea Challenge**, 2022, Faculty Advisor of 1 of 7 winning teams selected for funding
- **AIAA International Student Conference 1st Place Winner in the Team Category (as faculty advisor), 2022**
- **IEEE Robotics and Automation Letters Best Paper Award Honorable Mention, 2020** B. Rivière, *et al.*, "GLAS: Global-to-Local Safe Autonomy Synthesis for Multi-Robot Motion Planning with End-to-End Learning," IEEE Robotics and Automation Letters, July 2020.
- **AIAA Best Graduate Student Paper Award, AIAA Guidance, Navigation, and Control Conference, 2021 AIAA Scitech,** (as co-author and advisor), Y. K. Nakka, W. Hoenig, C. Choi, A. Harvard., A. Rahmani., and S.-J. Chung, "Information-Based Guidance and Control Architecture for Multi-Spacecraft On-Orbit Inspection," Jan. 2021.
- **NASA Breakthrough, Innovative and Game-changing (BIG) Idea Challenge**, 2021, Faculty Advisor of 1 of 7 winning teams selected for funding
- **Associate Fellow, AIAA**, Class of 2021
- **Bren Professor, Named Professorship, Caltech**, 2019-present
- **Best Student Paper Award** (as co-author and advisor), K. Matsuka, E. S. Lupu, Y. K. Nakka, R. Foust, S.-J. Chung, and F. Hadaegh, "Distributed Multi-Target Relative Pose Estimation for Cooperative Spacecraft Swarm," Proc. 10th International Workshop on Satellite Constellations and Formation Flying (IWSCFF), Glasgow, United Kingdom, July 16-19, 2019.
- **Caltech Bren Scholar**, 2016-2019
- **AIAA Best Paper Award**, 2015 AIAA Guidance, Navigation, and Control (GNC) Conference, 2015: D. Morgan, S.-J. Chung, and F. Y. Hadaegh, "Swarm Assignment and Trajectory Optimization Using Variable-Swarm, Distributed Auction Assignment and Model Predictive Control."
- **Arnold Beckman Fellow**, Center for Advanced Study (CAS), University of Illinois at Urbana-Champaign, 2014
- **Dean's Award for Excellence in Research**, College of Engineering, University of Illinois, 2014
- **NSF Faculty Early Career Development (CAREER) Award**, 2013
- **Innovator by Crain's Chicago Business** (May 28, 2012), 2012

- **AIAA Best Paper Award**, 2009 AIAA Infotech at Aerospace and Unmanned Unlimited Conference, S.-J. Chung, J. Stoner, and M. Dorothy, "Neurobiologically Inspired Control of Engineered Flapping Flight."
- **AFOSR Young Investigator Program (YIP) Award**, 2009
- **IEEE Best Paper Award**, IEEE International Conference on Electro-Information Technology, 2008. K. Celik, S.-J. Chung, and A. Somani, "Mono-Vision Corner SLAM for Indoor Navigation."

Other Honors and Recognitions

- 1st Place AIAA Region VI Student Paper Conference (faculty advisor), 2021
- Three projects selected in the conclusion of a decade of Caltech's research breakthroughs, 2019
- Invited Participant/Speaker, the National Academy of Engineering (NAE)'s 2018 US Frontiers of Engineering (US FOE) Symposium, September 2018
- One of 10 most notable moments of Caltech in 2018: Drones Taught to Herd Birds Away from Airports
- 17 for 2017: The Year in News at Caltech: A Robot Drone That Mimics Bat Flight. The first (cover page) of 17 most notable moments and research news at Caltech from 2017
- Invited Participant/Speaker, 5th Arab-American Frontiers of Science, Engineering, and Medicine Symposium by the National Academy of Sciences (NAS) and the National Academy of Engineering (NAE), 2017
- Finalist, Best Student Paper, 2014 IEEE Multi-Conference on Systems and Control (MSC) (as co-author and advisor)
- NASA Jet Propulsion Laboratory Summer Faculty Research Fellowship (3 times), 2013, 2010, 2011
- Co-Author of one of the most highly cited papers (top 1%) in the field worldwide (Elsevier Scopus), Council of Canadian Academies, 2011

b. Teaching Honors, Awards, and Recognition

- List of Teachers Ranked as Excellent, AE 202 Aerospace Flight Mechanics, UIUC, Fall 2013
- Faculty Advisor to 3rd place in the 2012/2014 NASA Lunarobotics Mining Competition, 2012, 2014
- Faculty Advisor to 1st Place Winner, 2010/2011 AIAA Undergraduate Team Space Design Competition, 2011
- Outstanding Faculty Award, College of Engineering, VEISHA Annual Celebration, Iowa State, 2009
- Most Inspiring Professor of the Year Award, Aerospace Engineering, Iowa State, 2008, 2009

c. Academic Honors, Awards, and Recognition (undergraduate years)

- AT&T Foundation Asia/Pacific Leadership Award, 2000
- Summa Cum Laude, KAIST, 1998
- KAIST Action Committee Presidential Award, 4th Ranked University-Wide Honor, 1998
- Ranked 1/120, School of Mechanical, Aerospace, Nuclear Engineering, Class of 1998, KAIST, 1998
- Rotary International Scholarship, 1997
- KAIST Studying Abroad Scholarship to RMIT, Australia, 1996
- Academic Excellence Recognition (GPA higher than 4.0/4.3) for four years (KAIST), 1994-1997
- Highest GPA Recognition, KAIST (Semester GPA 4.3/4.3), Spring 1996

d. Service Awards

- Letter of Commendation for Exceptional Reviewing, AIAA Journal of Guidance, Control, and Dynamics (two times), 2006, 2010
- US Army Commendation Medal (ARCOM), 2000, for military service in the 2nd Infantry Division of the US Army, Korean Augmentation To the United States Army (KATUSA)-1998-2000.

5. Editorial Boards and Professional Societies

1. **Associate Editor**, IEEE Transactions on Automatic Control, since November 2019.
2. **Lead Guest Editor** of Special Issue on Aerial Swarm Robotics, IEEE Transactions on Robotics, 2017-2018
3. **Associate Editor**, IEEE Transactions on Robotics, January 2017- December 2020.
4. **Associate Editor**, Journal of Guidance, Control, and Dynamics (AIAA) since December 2014.
5. **Associate Editor**, Space Robotics, Frontiers in Robotics and AI and Frontiers in Astronomy and Space Sciences
6. Associate Editor, Proceedings of the 2016 IEEE International Conference on Robotics and Automation (ICRA 2016), Stockholm, Sweden, May 16 - 21, 2016
7. Associate Editor, Proceedings of the 2015 IEEE International Conference on Robotics and Automation (ICRA 2015), Seattle, Washington, May 26 - 30, 2015
8. Associate Editor, Proceedings of the 2014 IEEE International Conference on Robotics and Automation (ICRA 2014), Hong Kong, China, May 31 - June 5, 2014.
9. Associate Editor, Proceedings of the 2013 IEEE International Conference on Robotics and Automation (ICRA 2013), Karlsruhe, Germany on May 6 - 10, 2013.

Tutorial Session/Talk

1. Planning and Control with Machine Learning for Autonomous and Robotic Systems, 2023 IEEE IEEE Conference on Systems, Man, and Cybernetics (SMC), Oahu, Hawaii (with H.Tsukamoto)
2. Contraction Theory for Machine Learning, 2021 IEEE Conference on Decision and Control (CDC) (lead organizer with Jean-Jacques Slotine)

Conferences/Workshop Organized

1. **Co-Organizer/Co-Lead**, Large Constellations and Formations for Exploring Interstellar Objects and Long-Period Comets, Keck Institute for Space Studies (KISS), October 29-November 2, 2018
2. **Area Co-Chair,** 2017 NASA/ESA Conference on Adaptive Hardware and Systems (AHS 2017), July 24 – 27, 2017, California Institute of Technology, Pasadena, CA.
3. **Technical Program Committee Member**, *2017 American Control Conference (ACC)*, May 24–26, Seattle, WA.
4. **Co-Organizer of Invited Sessions**, Advances in Guidance and Control of Unmanned Air Vehicles (with N. Hovakimyan), *2016 AIAA Guidance, Navigation, and Control Conference*, San Diego, CA, 4-8 January, 2016
5. Chair, 2015 SciTech, Best Intelligent System Student Paper Competition; *2015 AIAA Infotech at Aerospace Conference*, Kissimmee, FL, 5-9 January, 2015
6. **Program Committee Member**, *Robotics: Science and Systems Conference (RSS)*, Rome, Italy, July 2015
7. Planning Committee Member (Representing UIUC), 1st Aviation Innovation Conference in Urbana-Champaign (November 14, 2014)
8. **Co-Organizer of Invited Sessions**, Advances in UAS Technologies I & II (with N. Hovakimyan), *2015 AIAA Guidance, Navigation, and Control Conference*, AIAA SciTech, Kissimmee, FL, 5-9 January, 2015

9. **Co-Organizer of Invited Sessions**, Advances in GN&C of Multi-Agent Autonomous Systems (with N. Hovakimyan), *2015 AIAA Guidance, Navigation, and Control Conference*, Kissimmee, FL, 5-9 January, 2015
10. **International Program Committee (IPC) Member**, *2014 IEEE Conference on Control Applications (CCA)* of the IEEE Multi-Conference on Systems and Control (Oct. 8-10, 2014, in Antibes/Nice in France)
11. Session Chair, AIAA Guidance, Navigation, and Control Conference, August 2013
12. **Workshop Co-Organizer**, Integration of Mechanics, Sensing, Actuation and Control in Biological and Bio-inspired Locomotion, *Robotics: Science and Systems Conference (RSS)*, Sydney, Australia, July 2012
13. **Program Committee Member**, *Robotics: Science and Systems Conference (RSS)*, Sydney, Australia, July 2012
14. **Conference Technical Area Co-Chair**, Intelligent Control in Aerospace Applications, *AIAA Guidance, Navigation, and Control (GNC) Conference*, 2012
15. **Program Committee Member**, *Robotics: Science and Systems Conference (RSS)*, Los Angeles, CA, 2011
16. **Conference Technical Area Chair**, Control Theory, Design, and Analysis Area, *AIAA Guidance, Navigation, and Control (GNC) Conference*, 2011
17. **Conference Technical Area Co-Chair**, Three Areas: Intelligent Systems, Aerospace Robotics, and Adaptive Systems, *AIAA Infotech @ Aerospace Conference*, Saint Louis, MO, 2011
18. **Invited Session Co-Organizer and Co-Chair**, Cooperative Control of Networked Nonlinear Dynamical Systems, *IEEE Conference on Decision and Control (CDC)*, Atlanta, Georgia, December 2010
19. **Conference Technical Area Co-Chai**r, Control Theory, Design, and Analysis Area, *AIAA Guidance, Navigation, and Control (GNC) Conference,* 2010, Toronto, Canada
20. **Invited Session Organizer and Chair**: Bio-Inspired Flight Mechanics and Control of MAVs, *AIAA Atmospheric Flight Mechanics Conference (AFM)*, Toronto, Canada, August 2010
21. **Invited Session Organizer and Chair**: Bio-Inspired Control and Navigation for MAVs **(1st in Aerospace Community)**, *AIAA Infotech @ Aerospace and Unmanned Unlimited Conference and Exhibit*, Seattle, WA, April 2009

Professional Society Membership

1. Elected Member, AIAA Guidance, Navigation, and Control Technical Committee, 2020-present
2. Founding Faculty Advisor to AIAA Student Chapter at Caltech, 2020-present
3. Elected Member, IEEE Control System Society (CSS) Technical Committee on Aerospace Controls
4. Elected Member, AIAA Intelligent Systems Technical Committee (ISTC) 2010-2014
5. Associate Member, AIAA Guidance, Navigation, and Control Technical Committee (GNC TC) 2008-2011
6. Member, IEEE Robotics and Automation Society
7. Member, IEEE Control Systems Society
8. Senior Member, Institute of Electrical and Electronics Engineers (IEEE)
9. Senior Member, American Institute of Aeronautics and Astronautics (AIAA)

6. Courses Taught (with # of students)

Caltech

1. 2023S, CDS245 Data-Driven Control
2. 2022F CDS131 Linear System Theory
3. 2021F, CDS131 Linear System Theory
4. 2021S, E100 Special Topics in EAS: Electrodynamic Dust Shielding for Lunar Exploration
5. 2021W, 2021S, Space Engineering
6. 2020S, Ae103b Aerospace Control Systems

7. 2020W, CDS112 Optimal Control and Estimation (Ae103a Aerospace Control Systems)
8. 2019S, CDS270/Ae240 Control and Estimation for Swarm Autonomy
9. 2019W, CDS112 Optimal Control and Estimation (Ae103a Aerospace Control Systems)
10. 2018F, 2019W, 2019S, Ae105abc Aerospace Engineering (Course Organizer and co-Instructor)
11. 2018S, Ae103c, Dynamics and Control of Aircraft and Spacecraft (5)
12. 2018W, Ae103b, Dynamics and Control of Aircraft and Spacecraft (11)
13. 2017F, Ae103a, Dynamics and Control of Aircraft and Spacecraft (14)

University of Illinois at Urbana-Champaign

14. 2015S, AE403, Spacecraft Attitude Control (20)
15. 2014S, AE598SJC, Advanced Flight Control for Aircraft and Spacecraft Systems (6)
16. 2013F, AE199SAB Undergraduate Open Seminar (Student Aircraft Builders) (27)
17. 2013F, AE199IRS Undergraduate Open Seminar (Illinois Robotics in Space) (15)
18. 2012S, AE598DSC, Distributed Control (5)
19. 2012F, AE504, Optimal Aerospace Systems (6)
20. 2011F, 2013S, 2013F AE202, Aerospace Flight Mechanics (36, 52, 41)
21. 2011S, AE441S, Aerospace Systems Design II, 36 (produced 1st Place Team, AIAA Undergraduate Team Space Design Competition)
22. 2010F, AE440S Aerospace Systems Design I, (36); produced 1st Place Team, AIAA Undergraduate Team Space Design Competition
23. 2010S, 2016S AE353 Aerospace Control Systems (86, 120)
24. 2009F, AE454 System Dynamics and Control (14)

Iowa State University

25. 2009S, AerE531 Automatic Control of Flight Vehicles (10)
26. 2008F, AerE331 Flight Control Systems (90)
27. 2007F, 2008S AerE355 Aircraft Flight Dynamics and Control (82, 55)

Course Development at Caltech (for 1st year graduate students)

1. CDS 245 Data-driven Control. 9 units (3-0-6). Prerequisites: CDS 131 and CDS 232. Mathematical treatment of data-driven machine learning methods for controlling robotic and dynamical systems with various uncertainties. Gradient and least-squares estimators and variants for dynamical systems for system identification and residual learning. Adaptive control methods for online adaptation and combination with deep learning. Learning-based control certificates such as neural Lyapunov functions and neural contraction metrics.
2. Ae 240/CDS270 Control and Estimation for Swarm Autonomy. 9 units (3-0-6); Prerequisites: CDS 112 (or Ae103a) and CDS 232, or permission of instructor. Various control and estimation tools for analysis and design of distributed autonomous robots and cooperative control of aerospace vehicles. Input-output stability tools including passivity and contraction theory. Synchronization and consensus theory for networked nonlinear systems. Learning, optimal control, and estimation for distributed autonomous agents.
3. Ae 103a. Optimal Control and Estimation. 9 units (3-0-6); first term. Prerequisites: CDS 110 (or equivalent). Optimization-based design of control systems, including optimal control and receding horizon control. Introductory random processes and optimal estimation. Kalman filtering and nonlinear filtering methods for autonomous systems.
4. Ae 103b. Dynamics and Control of Aircraft and Spacecraft. 9 units (3-0-6); second term. Prerequisites: Ae103a or permission of instructor. Advanced astrodynamics, flight mechanics, and attitude dynamics. Guidance, navigation, and control of autonomous aerospace vehicles.

5. Ae 103c. Dynamics and Control of Aircraft and Spacecraft. 9 units (1-0-8); third term. Prerequisites: Ae103a, Ae103b, or permission of instructor. Advanced topics in aerospace autonomy and guidance, navigation, and control.
6. Revision of Ae 105abc. Aerospace Engineering since Fall 2018. Revamping the course organization and project as the main course organizer.

Courses Developed at UIUC

4. AE598SJC Advanced Flight Control for Aircraft and Spacecraft Systems
Advanced Spacecraft and Aircraft Dynamics and Nonlinear/ Linear Control Theory for Flight Control Systems. Review of Aircraft Flight Dynamics and Relative Spacecraft Motions for Formation Flying and Proximity Operations such as Rendezvous and Docking; Vertical Take-off and Landing (VTOL) Flight Dynamics including Helicopters and Quadcopters.
5. AE598DSC Distributed Control (Spring 2012)**.** Developed a graduate level control theory course. Overview of methods for analyzing stability and performance of interconnected linear and nonlinear systems, along with design methods. Input/Output Tools, Lyapunov/State-Space methods, and Optimization tools for control design.

7. Publications

a. Books Edited or Co-Edited

1. **S.-J. Chung**, A. A Paranjape, P. Dames, S. Shen, and V. Kumar, Special Section on Aerial Swarm Robotics, *IEEE Transactions on Robotics*, with Guest Editorial Special Section on Aerial Swarm Robotics, vol. 34, no. 4, August 2018, pp. 835 – 836.

b. Chapters in Books

1. F. Y. Hadaegh, A. Johnson, D. S. Bayard, B. Acikmese, **S.-J. Chung**, and R. Mehra, "New Guidance, Navigation, and Control Technologies for Formation Flying Spacecraft and Planetary Landing," *Advances in Control System Technology for Aerospace Applications*, Eric Feron (Ed.), Aerospace Decision and Control, Lecture Notes in Control and Information Sciences (LNCIS), Springer, 2016, pages 49-80. ISBN: 978-3-662-47693-2 (Print) 978-3-662-47694-9 (Online) **(invited article)**
2. V. V. Kulkarni, A. A. Paranjape, and **S.-J. Chung**, "Robust Tunable Transcriptional Oscillators using Dynamic Inversion," *A Systems Theoretic Approach to Systems and Synthetic Biology I: Models and System Characterizations*, V. Kulkarni, Vishwesh, G.-B. Stan, K. Raman (Eds.), Springer, 2014, pages 103-119. DOI:10.1007/978-94-017-9041-3_4.
3. M. Dorothy, A. A. Paranjape, P. D. Kuang, and **S.-J. Chung**, "Towards Bio-inspired Robotic Aircraft: CPG-based Control of Flapping and Gliding Flight," *Advances in Intelligent and Autonomous Aerospace Systems*, Chapter 1, John Valasek (Ed.), Progress in Astronautics and Aeronautics, American Institute of Aeronautics and Astronautics (AIAA), Reston, VA, 2012, pages 1-31. ISBN: 978-1-60086-897-9.
4. F. Y. Hadaegh, B. Acikmese, D. S. Bayard, G. Singh, M. Mandic, **S.-J. Chung**, and D. Morgan, "Guidance and Control of Formation Flying Spacecraft: From Two to Thousands," in *Adventures on the Interface of Mechanics and Control*, Edited by K. Alfriend, et al., Tech Science Press, 2012, pages 327-371. **(invited article)**

c. Journal Articles

66. S.J. Han, S.-J. Chung, and J. C. Doyle, "Predictive Control of Linear Discrete-Time Markovian Jump Systems via the Analysis of Recurrent Patterns," *Automatica*, vol. 156, October 2023, 111197.
65. K. Matsuka and S.-J. Chung, "Localized and Incremental Probabilistic Inference for Large-Scale Networked Dynamical Systems," *IEEE Transactions on Robotics*, vol. 39, no. 5, October 2023, pp. 3516-3535.
64. E. Tang and S.-J. Chung, "Experiments and Modeling of the Ceiling Effect with Drone Scale Propellers," *AIAA Journal,* https://arc.aiaa.org/doi/10.2514/1.J062568
63. K. X. Cai, T. Phan-Minh, S.-J. Chung, and R. M. Murray, "Rules of the Road: Formal Guarantees for Autonomous Vehicles with Behavioral Contract Design," *IEEE Transactions on Robotics*, vol. 39, no. 3, March 2023, pp. 1853-1872.
62. E. Tang and S.-J. Chung, "Rapid Extraction of Propeller Geometry Using Photogrammetry," *International Journal of Micro Air Vehicles*, to appear, 2022. https://doi.org/10.1177/17568293221132044
61. M. Duffy, S.-J. Chung, and L. B. Bergman, "A General Bayesian Nonlinear Estimation Method Using Resampled Smooth Particle Hydrodynamics Solutions of the Underlying Fokker-Planck Equation," *International Journal of Non-Linear Mechanics*, vol. 146, November 2022, 104134.
60. Y. K. Nakka and S.-J. Chung, "Trajectory Optimization of Chance-Constrained Nonlinear Stochastic Systems for Motion Planning and Control," *IEEE Transactions on Robotics*, vol. 39, no. 1, February 2023, pp. 203-222.
59. SJ Han and S.-J. Chung, "Incremental Nonlinear Stability Analysis of Stochastic Systems Perturbed by Lévy Noise," *International Journal of Robust and Nonlinear Control*, vol. 32, no. 12, August 2022, pp. 7174-7201.
58. M. O'Connell*, G. Shi*, X. Shi, K. Azizzadenesheli, A. Anandkumar, Y. Yue, and S.-J, Chung, "Neural-Fly Enables Rapid Learning for Agile Flight in Strong Winds," *Science Robotics*, vol 7, No. 66, May 4, 2022.
*These authors contributed equally to this work and are listed in alphabetical order.
57. Y. K. Nakka, W. Hoenig, C. Choi, A. Harvard, A. Rahmani, and S.-J. Chung, "Information-based Guidance and Control Architecture for Multi-Spacecraft On-Orbit Inspection," *Journal of Guidance, Control, and Dynamics*, to appear, 2022. https://doi.org/10.2514/1.G006278
56. K. Kim*, P. Spieler*, E. S. Lupu, A. Ramezani, and S.-J. Chung, "A Bipedal Walking Robot that Can Fly, Slackline, and Skateboard," *Science Robotics* (AAAS), Vol. 6, Issue 59, eabf8136, 2021. **October 2021 Cover Article**. *These authors contributed equally to this work.
55. H. Tsukamoto, S.-J. Chung, and J.-J. E. Slotine, "Contraction Theory for Nonlinear Stability Analysis and Learning-based Control: A Tutorial Overview," *Annual Reviews in Control*, vol. 52, 2021, pp. 135-169.
54. V. Capuano, A. Harvard, and S.-J. Chung, "On-board Cooperative Spacecraft Relative Navigation Fusing GNSS with Vision," *Progress in Aerospace Sciences*, vol. 128, January 2022.
53. B. Riviere, W. Hoenig, M. Anderson, and S.-J. Chung, "Neural Tree Expansion for Multi-Robot Planning in Non-Cooperative Environments," *IEEE Robotics and Automation Letters*, vol. 6, no. 4, Oct. 2021, pp. 6868-6875.
52. B. Riviere and S.-J. Chung, "H-TD2: Hybrid Temporal Difference Learning for Adaptive Urban Taxi Dispatch," *IEEE Transactions on Intelligent Transportation Systems*, vol. 23, no. 8, August 2022, pp. 10935-10944.
51. H. Tsukamoto and S.-J. Chung, "Learning-based Robust Motion Planning with Guaranteed Stability: A Contraction Theory Approach," *IEEE Robotics and Automation Letters*, vol. 6, no. 4, Oct. 2021, pp. 6164-6171.
50. A. T. Fragoso, C. T. Lee, A. S. McCoy, and S.-J. Chung, "A Seasonally-Invariant Deep Transform for Visual Terrain-Relative Navigation," *Science Robotics* (AAAS), Vol. 6, Issue 55, eabf3320, 2021.
49 G. Shi, W. Hoenig, X. Shi, Y. Yue, and S.-J. Chung, "Neural-Swarm2: Planning and Control of Heterogeneous Multirotor Swarms using Learned Interactions," *IEEE Transactions on Robotics*, vol. 38, no. 2, April 2022, pp. 1063-1079.

48. H. Tsukamoto, S.-J. Chung, and J.-J. E. Slotine, "Neural Stochastic Contraction Metrics for Learning-based Control and Estimation," *IEEE Control Systems Letters*, vol. 5, no. 5, November 2021, pp. 1825-1830.
47. H. Tsukamoto and S.-J. Chung, "Robust Controller Design for Stochastic Nonlinear Systems via Convex Optimization," *IEEE Transactions on Automatic Control*, vol. 66, no. 10, October 2021. pp. 4731-4746. https://ieeexplore.ieee.org/document/9261103
46. Y. K. Nakka, A. Liu, G. Shi, A Anandkumar, Y. Yue, and S.-J. Chung, "Chance-Constrained Trajectory Optimization for Safe Exploration and Learning of Nonlinear Systems," *IEEE Robotics and Automation Letters*, vol. 6, no. 2, April 2021, pp. 389-396.
45. K. Meier, S.-J. Chung, and S. Hutchinson, "River segmentation for autonomous surface vehicle localization and river boundary mapping," *Journal of Field Robotics*, vol. 38, no. 2, February 2021, pp. 192-211. http://doi.org/10.1002/rob.21989
44. A. A. Paranjape, S.-J. Chung, and H. H. Hilton, "Approximate Model for Cycle-Averaged Aerodynamic Forces, and its Application to Stability and Control of Bird-Scale Flapping-Wing Aircraft," *Mathematics in Engineering Science and Aerospace*, vol. 11, no. 3, 2020.
43. H. Tsukamoto and S.-J. Chung, "Neural Contraction Metrics for Robust Estimation and Control: A Convex Optimization Approach," *IEEE Control Systems Letters*, vol. 5, no. 1, Jan. 2021, pp. 211-216. (PDF)
42. K. Matsuka, A. O. Feldmana, E. S. Lupua, S.-J. Chung, and F. Y. Hadaegh, "Decentralized Formation Pose Estimation for Spacecraft Swarms," *Advances in Space Research*, Advances in Space Research, vol. 67, no. 11, June 2021, pp. 3527-3545. (PDF)
41. B. Rivière, W. Hoenig, Y. Yue, and S.-J. Chung, "GLAS: Global-to-Local Safe Autonomy Synthesis for Multi-Robot Motion Planning with End-to-End Learning," *IEEE Robotics and Automation Letters*, vol. 5, no. 3, July 2020, pp. 4249-4256. (PDF) **Honorable Mention, IEEE Robotics and Automation Letters Best Paper Award**
40. R. C. Foust, E. S. Lupu, Y. K. Nakka, S.-J. Chung, and F. Y. Hadaegh, "Autonomous In-Orbit Satellite Assembly from a Modular Heterogeneous Swarm," *Acta Astronautica*, Volume 169, April 2020, pp. 191-205. (PDF)
39. R. C. Foust, S.-J. Chung, and F. Y. Hadaegh, "Optimal Guidance and Control with Nonlinear Dynamics Using Sequential Convex Programming," *Journal of Guidance, Control, and Dynamics,* vol. 43, no. 4, April 2020, pp. 633-644. https://doi.org/10.2514/1.G004590
38. V. Capuano, K. Kim, A. Harvard, and S.-J. Chung, "Monocular-Based Pose Determination of Uncooperative Space Objects," *Acta Astronautica*, vol. 166, January 2020, pp. 493-506. (PDF)
37. Y. K. Nakka, S.-J. Chung, J. T. Allison, J. B. Aldrich, and O. S. Alvarez-Salazar, "Nonlinear Attitude Control of a Spacecraft with Distributed Actuation of Solar Arrays," *Journal of Guidance, Control, and Dynamics*, vol. 42, no. 3, March 2019, pp. 458-475. (PDF)
36 S.-J. Chung, A. A Paranjape, P. Dames, S. Shen, and V. Kumar, "Guest Editorial Special Section on Aerial Swarm Robotics," *IEEE Transactions on Robotics*, vol. 34, no. 4, August 2018, pp. 835-836.
35. S.-J. Chung, A. A Paranjape, P. Dames, S. Shen, and V. Kumar, "A Survey on Aerial Swarm Robotics," *IEEE Transactions on Robotics*, vol. 34, no. 4, 2018, pp. 837-855. (PDF)
34. S. Bandyopadhyay and S.-J. Chung, "Distributed Bayesian Filtering Algorithm for Dynamic Sensor Networks," *Automatica,* vol. 97, November 2018, pp. 7-17. (PDF)
33. A. A. Paranjape, S.-J. Chung, K. Kim, and D. H. Shim, "Robotic Herding of a Flock of Birds Using an Unmanned Aerial Vehicle," *IEEE Transactions on Robotics*, vol. 34, no. 4, 2018, pp. 901-915. (PDF)
32. J. Hoff, A. Ramezani, S.-J. Chung, and S. Hutchinson, "Optimizing the Structure and Movement of a Robotic Bat with Biological Kinematic Synergies," *The International Journal of Robotics Research*, vol. 37, no. 10, 2018, pp. 1233-1252. (PDF)
31. A. A. Paranjape and S-J. Chung, "Robust Adaptive Boundary Control of Semilinear PDE Systems Using a Dyadic Controller," *International Journal of Robust and Nonlinear Control*, vol. 28, no. 8, 2018, pp. 3174-3188. (PDF)
30. M. Miller, S.-J. Chung, and S. Hutchinson, "The Visual-Inertial Canoe Dataset," *The International Journal of Robotics Research*, vol. 37, no. 1, 2018, pp. 13-20. (PDF)

29. K. Meier, S.-J. Chung, and S. Hutchinson, "Visual-Inertial Curve Simultaneous Localization and Mapping: Creating a Sparse Structured World without Feature Points," *Journal of Field Robotics*, vol. 35, no. 4, 2018, pp. 516-544. (PDF)
28. C. Chilan, D. R. Herber, Y. K. Nakka, J. T. Allison, S.-J. Chung, J. B. Aldrich, and O. S. Alvarez-Salazar, "Co-Design of Strain-Actuated Solar Arrays for Spacecraft Precision Pointing and Jitter Reduction," *AIAA Journal*, vol. 55, no. 9, 2017, pp. 3180-3195. (PDF)
27. A. Ramezani, S.-J. Chung, and S. Hutchinson, "A Biomimetic Robotic Platform to Study Flight Specializations of Bats," *Science Robotics (AAAS),* vol. 2, eaal2505, February 2017. **(February issue Cover Article)** Highlighted in *Nature*, "A robot that flies like a bat," *Nature* 542, 140 (09 February 2017). (PDF) **In the top 5% of all research outputs scored by Altmetric (#3 of 287 Science Robotics papers).**
26. S. Bandyopadhyay, S.-J. Chung, and F. Y. Hadaegh, "Probabilistic and Distributed Control of a Large-Scale Swarm of Autonomous Agents," *IEEE Transactions on Robotics*, vol. 33, no. 5, 2017, pp. 1103-1123. (PDF)
25. M. Dorothy and S.-J. Chung, "Switched Systems with Multiple Invariant Sets," *System & Control Letters*, vol. 96, October 2016, pp. 103–109. (PDF)
24. D. Morgan, G. P. Subramanian, S.-J. Chung, and F. Y. Hadaegh, "Swarm Assignment and Trajectory Optimization Using Variable-Swarm, Distributed Auction Assignment and Sequential Convex Programming," *The International Journal of Robotics Research*, vol. 35, no. 10, September 2016, pp. 1261–1285. **A preliminary version won 2015 AIAA GNC Best Paper Award.** (PDF)
23. S. Bandyopadhyay, S.-J. Chung, and F. Y. Hadaegh, "Nonlinear Attitude Control of Spacecraft with a Large Captured Object," *Journal of Guidance, Control, and Dynamics*, vol. 39, no. 4, 2016, pp. 754-769. (PDF)
22. S. Bandyopadhyay, R. Foust, G. P. Subramanian, S.-J. Chung, and F. Y. Hadaegh, "Review of Formation Flying and Constellation Missions Using Nanosatellites," *Journal of Spacecraft and Rockets*, vol. 53, no. 3, 2016, pp. 567-578. (PDF)
21. J. Yang, A. Dani, S.-J. Chung, and S. Hutchinson, "Vision-Based Localization and Robot-Centric Mapping in Riverine Environments," *Journal of Field Robotics*, vol. 34, no. 3, 2017, pp. 429-450. (PDF)
20. A. A. Paranjape, K. C. Meier, X. Shi, S.-J. Chung, and S. Hutchinson, "Motion Primitives and 3D Path Planning for Fast Flight through a Forest," *The International Journal of Robotics Research*, vol. 34, no. 3, March 2015, pp. 357-377. (PDF)
19. A. P. Dani, S.-J. Chung, and S. Hutchinson, "Observer Design for Stochastic Nonlinear Systems via Contraction-based Incremental Stability," *IEEE Transactions on Automatic Control*, vol. 60, no. 3, March 2015, pp. 700-714. (PDF)
18. J. Yu, S.-J. Chung, and P. G. Voulgaris, "Target Assignment in Robotic Networks: Distance Optimality Guarantees and Hierarchical Strategies," *IEEE Transactions on Automatic Control*, vol. 60, no. 2, February 2015, pp. 327-341. (PDF)
17. F. Y. Hadaegh, S.-J. Chung, and H. M. Manohara, "On Development of 100-Gram-Class Spacecraft for Swarm Applications," *IEEE Systems Journal*, vol. 10, no. 2, June 2016, pp. 673-684. (PDF)
16. D. Morgan, S.-J. Chung, and F. Y. Hadaegh, "Model Predictive Control of Swarms of Spacecraft Using Sequential Convex Programming," *Journal of Guidance, Control, and Dynamics*, vol. 37, no. 6, 2014, pp. 1725-1740. (PDF)
15. A. A. Paranjape, S.-J. Chung, and J. Kim, "Novel Dihedral-Based Control of Flapping-Wing Aircraft with Application to Perching," *IEEE Transactions on Robotics*, vol. 29, no. 5, October 2013, pp. 1071-1084. (PDF)
14. A. A. Paranjape, J. Guan, S.-J. Chung, and M. Krstic, "PDE Boundary Control for Flexible Articulated Wings on a Robotic Aircraft," *IEEE Transactions on Robotics*, vol. 29, no. 3, June 2013, pp. 625-640. (PDF)
13. S.-J. Chung, S. Bandyopadhyay, I. Chang, and F. Y. Hadaegh, "Phase Synchronization Control of Complex Networks of Lagrangian Systems on Adaptive Digraphs," *Automatica*, vol. 49, no. 5, May 2013, pp. 1148-1161. (PDF)

12. A. A. Paranjape, M. R. Dorothy, S.-J. Chung, and K. D. Lee, "A Flight Mechanics-Centric Review of Bird-Scale Flapping Flight," *International Journal of Aeronautical and Space Sciences*, vol. 13, no. 3, September 2012, pp. 267-282. *invited review article.* (PDF)
11. D. Morgan, S.-J. Chung, L. Blackmore, B. Acikmese, D. Bayard, and F. Y. Hadaegh, "Swarm-Keeping Strategies for Spacecraft under J2 and Atmospheric Drag Perturbations," *Journal of Guidance, Control, and Dynamics*, vol. 35, no. 5, September-October 2012, pp. 1492-1506. (PDF)
10. A. A. Paranjape, S.-J. Chung, H. H. Hilton, and A. Chakravarthy, "Dynamics and Performance of Tailless Micro Aerial Vehicle with Flexible Articulated Wings," *AIAA Journal*, vol. 50, no. 5, May 2012, pp. 1177-1188. (PDF)
9. A. A. Paranjape, S.-J. Chung, and M. S. Selig, "Flight Mechanics of a Tailless Articulated Wing Aircraft," *Bioinspiration & Biomimetics*, vol. 6, no. 2, 2011, 026005. **Highlighted as Lab Talk Article**. (PDF)
8. S.-J. Chung and M. Dorothy, "Neurobiologically Inspired Control of Engineered Flapping Flight," *Journal of Guidance, Control, and Dynamics*, vol. 33, no. 2, Mar.-Apr. 2010, pp. 440-453. The conference paper version won **AIAA Infotech@Aerospace Best Paper Award**. (PDF)
7. K. Seo, S.-J. Chung, and J.-J. E. Slotine, "CPG-based Control of a Turtle-like Underwater Vehicle," *Autonomous Robots*, Special Issue on Control of Locomotion: From Animals to Robots, vol. 28, no. 3, 2010, pp. 247-269. (PDF)
6. S.-J. Chung and J.-J. E. Slotine, "Cooperative Robot Control and Concurrent Synchronization of Lagrangian Systems," *IEEE Transactions on Robotics*, vol. 25, no. 3, June 2009, pp. 686-700. **Thomson-Reuters ESI Highly Cited Paper & Top Paper** (PDF)
5. S.-J. Chung, U. Ahsun, and J.-J. E. Slotine, "Application of Synchronization to Formation Flying Spacecraft: Lagrangian Approach," *Journal of Guidance, Control and Dynamics*, vol. 32, no. 2, Mar.-Apr. 2009, pp. 512-526. (PDF)
4. S.-J. Chung, J.-J. E. Slotine, and D. W. Miller, "Propellant-Free Control of Tethered Formation Flight, Part 2: Nonlinear Underactuated Control," *Journal of Guidance, Control, and Dynamics*, vol. 31, no. 5, September-October 2008, pp. 1437-1446. (PDF)
3. S.-J. Chung, and D. W. Miller, "Propellant-Free Control of Tethered Formation Flight, Part 1: Linear Control and Experimentation," *Journal of Guidance, Control, and Dynamics*, vol. 31, no. 3, May-June 2008, pp. 571-584. (PDF)
2. S.-J. Chung, J.-J. E. Slotine, and D. W. Miller, "Nonlinear Model Reduction and Decentralized Control of Tethered Formation Flight," *Journal of Guidance, Control and Dynamics*, vol. 30, no. 2, 2007, pp. 390-400. (PDF)
1. S.-J. Chung, D. W. Miller, and O. L. de Weck, "ARGOS Testbed: Study of Multidisciplinary Challenges of Future Spaceborne Interferometric Arrays," *Optical Engineering*, vol. 43, no. 9, September 2004, pp. 2156-2167. (PDF)

d. Referred Articles in Conference Proceedings

144. Hiroyasu Tsukamoto, Benjamin Rivière, Changrak Choi, Amir Rahmani, Soon-Jo Chung, "CaRT: Certified Safety and Robust Tracking in Learning-based Motion Planning for Multi-Agent Systems," *IEEE Conference on Decision and Control (CDC),* Singapore, December 2023.
143. Connor Lee, Jonathan G. Frennert, Lu Gan, and Matthew Anderson, Soon-Jo Chung, "Online Self-Supervised Thermal Water Segmentation for Aerial Vehicles," *2023 IEEE/RSJ International Conference on Intelligent Robots and Systems (IROS).* **2023 IROS Best Paper Award on Agri-Robotics (Finalist)**
142. SooJean Han, Soon-Jo Chung, Johanna Gustafson, "Congestion Control of Vehicle Traffic Networks by Learning Structural and Temporal Patterns," 5th Annual Learning for Dynamics & Control (L4DC) Conference, 2023.
141. Lu Gan, Connor Lee, and Soon-Jo Chung, "Unsupervised RGB-to-Thermal Domain Adaptation via Multi-Domain Attention Network," 2023 IEEE International Conference on Robotics and Automation (ICRA), London, UK, June 2023.

140. Changrak Choi, Yashwanth Kumar Nakka, Amir Rahmani, Soon-Jo Chung, "Resilient Multi-Agent Collaborative Spacecraft Inspection," *IEEE Aerospace Conference*, 2023.
139. Benjamin PS Donitz, Declan Mages, Hiroyasu Tsukamoto, Peter Dixon, Damon Landau, Soon-Jo Chung, Erica Bufanda, Michel Ingham, Julie Castillo-Rogez, "Interstellar Object Accessibility and Mission Design," *IEEE Aerospace Confere*nce, 2023.
138. K. Matsuka, L. Zhang, I. Ragheb, C. Ohenzuwa, and S.-J. Chung, "High-fidelity, Closed-loop Simulation of Spacecraft Vision-based Relative Navigation in ROS2," *33rd AAS/AIAA Space Flight Mechanics Meeting*, 2023.
137. K. Matsuka, C. Ohenzuwa, and S.-J. Chung, "Rapid Synthetic Image Generation using Neural Radiance Fields for Vision-based Formation Flying Spacecraft," *33rd AAS/AIAA Space Flight Mechanics Meeting*, 2023.
136. James Ragan, Benjamin Riviere, Soon-Jo Chung, "Bayesian Active Sensing for Fault Estimation with Belief Space Tree Search," *AIAA Scitech*, 2023. **Winner of AIAA Guidance, Navigation, and Control Best Student Paper Award.**
135. Kaila Coimbra, Calle Junker, Lucas Pabarcius, Malcolm G Tisdale, Sravani Boggaram, Robert Daigle, Nathan Ng, Parul Singh, Tomas Wexler, Soon-Jo Chung, "Design of a Lunar Architecture for Tree Traversal in Service of Cabled Exploration," *AIAA Scitech Forum*, 2023.
134. Matthew Anderson, Kai Lehmkueler, Jeremy Randle, KC Wong, Soon-Jo Chung, "UAS Flight Testing in Support of Research for Academia: Getting Started and Experiences from the Fields," *AIAA Scitech*, 2023.
133. Samuel Prager, Brian Hawkins, Matthew Anderson, Soon-Jo Chung, Marco Lavalle, "Development of Ultra-Wideband Software Defined Radar Testbed to Support SAR Tomographic Mission Formulation," *IEEE International Geoscience and Remote Sensing Symposium*, 2022.
132. Chenkai Yu, Guanya Shi, Soon-Jo Chung, Yisong Yue, Adam Wierman, "Competitive control with delayed imperfect information," *American Control Conference (ACC)*, 2022.
131. Malcom Tisdale, Isabella Dulá, Luis Pabon Madrid, Polina Verkhovodova, Jules Pénot, Kaila Coimbra, Leah Soldner, Tanmay Gupta, Rithvik Musuku, Soon-Jo Chung, "Design of a Modular and Orientable Electrodynamic Shield for Lunar Dust Mitigation," *AIAA SCITECH Forum, 2022*.
130. Ellande Tang, Soon-Jo Chung, "Experimental Studies of Propeller-Wing Interactions in Transition from Hover to Forward Flight," *AIAA SCITECH Forum*, 2022.
129. Daniel Neamati, Yashwanth Kumar K Nakka, Soon-Jo Chung, "Learning-based methods to model small body gravity fields for proximity operations: Safety and Robustness," *AIAA SCITECH Forum*, 2022.
128. G. Shi, K. Azizzadenesheli, M. O'Connell, S.-J. Chung, and Y, Yue, "Meta-Adaptive Nonlinear Control: Theory and Algorithms," *Neural Information Processing Systems (NeurIPS)*, 2021.
127. H. Tsukamoto, S.-J. Chung, J.-J. E. Slotine, and C. Fan, "A Theoretical Overview of Neural Contraction Metrics for Learning-Based Control with Guaranteed Stability," *Proc. IEEE Conference on Decision and Control (CDC)*, December 2021.
126. S. Singh, H. Tsukamoto, B. Lopez, S.-J. Chung, and J.-J. E. Slotine, "Safe Motion Planning with Tubes and Contraction Metrics," *Proc. IEEE Conference on Decision and Control (CDC)*, December 2021.
125. H. Tsukamoto, S.-J. Chung, and J.-J. E. Slotine, "Learning-based Adaptive Control via Contraction Theory," *Proc. IEEE Conference on Decision and Control (CDC)*, December 2021.
124. M. Lavalle, I. Seker, E. Loria, R. Ahmed, B. Hawkins, S. Prager, D. Clark, R. Beauchamp, M. Haynes, P. Focardi, M. Anderson, J. Ragan, K. Matsuka, V. Capuano, and S.-J. Chung, "Distributed Aperture Radar Tomographic Sensors (DARTS) to Map Surface Topography and Vegetation Structure," Proc. IEEE International Geoscience and Remote Sensing Symposium (IGARSS), July 2021.
123. B. Hawkins, M. Anderson, S. Prager, S.-J. Chung, and M. Lavalle, "Experiments with Small UAS to Support SAR Tomographic Mission Formulation," *Proc. IEEE International Geoscience and Remote Sensing Symposium (IGARSS)*, July 2021.
122. K. Matsuka, A. Santamaria-Navarro, V. Capuano, A. Harvard, A. Rahmani, and S.-J. Chung, "Collaborative Pose Estimation of an Unknown Target Using Multiple Spacecraft," *IEEE Aerospace Conference*, March 6-13, 2021.

121. J. Ragan, R. Ahmed, Kai Matsuka, I. Seker, J. Walker, S.-J. Chung, and M. Lavalle, "Optimizing Formation Flying Orbit Designs," *Proc. 31st AAS/AIAA Space Flight Mechanics Meeting*, AAS 21-410.
120. E. Tang, P. Spieler, M. Anderson, and S.-J. Chung, "Design of the Next-Generation Autonomous Flying Ambulance," AIAA Scitech Forum, January 2021, AIAA 2021-1514.
119. M. Anderson, S. Backus, E. Hughes, A. Curtis, S.-J. Chung, and E. M. Stolper, "Development and Deployment of a UAV-Borne Gas Capture System for Fumarole Sampling," AIAA Scitech Forum, January 2021, AIAA 2021-1409.
118. E. Tang and S.-J. Chung, "Experimental Model of Effects of Large Upstream Obstructions on Drone Scale Propellers," AIAA Scitech Forum, January 2021, AIAA 2021-1648.
117. Y. K. Nakka, W. Hoenig, C. Choi, A. Harvard., A. Rahmani., and S.-J. Chung, "Information-Based Guidance and Control Architecture for Multi-Spacecraft On-Orbit Inspection," *AIAA Guidance, Navigation, and Control Conference*, Jan. 2021, AIAA 2021-1103. **Winner of AIAA Guidance, Navigation, and Control Best Graduate Student Paper.**
116. G. Shi, Y. Lin, S.-J. Chung, Y. Yue, and A. Wierman, "Online Optimization with Memory and Competitive Control," *Neural Information Processing Systems (NeurIPS)*, 2020.
115. C. Yu, G. Shi, S.-J. Chung, Y. Yue, and A. Wierman, "The Power of Predictions in Online Control," *Neural Information Processing Systems (NeurIPS),* 2020.
114. S. Lee, V. Capuano, A. Harvard, and S.-J. Chung, "Fast Uncertainty Estimation for Deep Learning Based Optical Flow," *Proceedings of the 2020 IEEE/RSJ International Conference on Intelligent Robots and Systems (IROS)*, 2020.
113. A. Liu, G. Shi, S.-J. Chung, A. Anandkumar, and Y. Yue, "Robust Regression for Safe Exploration in Control," *Proceedings of Machine Learning Research*, PMLR 120:608-619, 2020.
112. X. Shi, P. Spieler, E. Tang, E. S. Lupu, P. Tokumaru, and S.-J. Chung, "Adaptive Nonlinear Control of Fixed-Wing VTOL with Airflow Vector Sensing," *Proc. IEEE International Conference on Robotics and Automation (ICRA)*, Paris, France, 2020.
111. G. Shi, W. Hoenig, Y. Yue, and S.-J. Chung, "Neural-Swarm: Decentralized Close-Proximity Multirotor Control Using Learned Interactions," *Proc. IEEE International Conference on Robotics and Automation (ICRA)*, Paris, France, 2020.
110. B. Bernhard, C. Choi, A. Rahmani, S.-J. Chung, and F. Hadaegh, "Coordinated Motion Planning for On-Orbit Satellite Inspection using a Swarm of Small-Spacecraft," *Proc. IEEE Aerospace Conference*, Big Sky, Montana, Mar. 7-14, 2020.
109. J. Villa, S. Bandyopadhyay, B. Morrell, B. Hockman, D. Lubey, A. Harvard, S.-J. Chung, S. Bhaskaran, and I. A. Nesnas, "Optical Navigation for Autonomous Approach of Unexplored Small Bodies," *Proc. 43rd Annual AAS Guidance, Navigation and Control Conference*, AAS 20-125.
108. A. Harvard, V. Capuano, E. Shao, and S.-J. Chung, "Spacecraft Pose Estimation from Monocular Images Using Neural Network Based Keypoints and Visibility Maps," AIAA SciTech, Orland, FL, January 6-10, 2020.
107. H. Tskuamoto and S.-J. Chung, "Optimal Tracking Control for Stochastic Nonlinear Systems using Contraction Analysis," *Proc. the 2019 IEEE Conference on Decision and Control (CDC)*, Nice, France, December 11-13, 2019.
106. Y. K. Nakka and S.-J. Chung, "Trajectory Optimization for Chance-Constrained Nonlinear Stochastic Systems," *Proc. the 2019 IEEE Conference on Decision and Control (CDC)*, Nice, France, December 11-13, 2019.
105. V. Capuano, A. Harvard, Y. Lin, and S.-J. Chung, "DGNSS-Vision Integration for Robust and Accurate Relative Spacecraft Navigation," *Proc. Institute of Navigation ION GNSS+*, Miami, Florida, Sep. 16-20, 2019.
104. K. Matsuka, E. S. Lupu, Y. K. Nakka, R. Foust, S.-J. Chung, and F. Hadaegh, "Distributed Multi-Target Relative Pose Estimation for Cooperative Spacecraft Swarm," *Proc. 10th International Workshop on Satellite Constellations and Formation Flying (IWSCFF)*, Glasgow, United Kingdom, July 16-19, 2019. **Best Student Paper Award**.
103. K. Cai, A. Harvard, R. M. Murray, and S.-J. Chung, "Robust Estimation Framework with Semantic Measurements," *Proc. American Control Conference (ACC)*, Philadelphia, PA, July 10-12, 2019.

102. G. Shi*, X. Shi*, M. O'Connell*, R. Yu, K. Azizzadenesheli, A. Anandkumar, Y. Yue, and S.-J. Chung, "Neural Lander: Stable Drone Landing Control using Learned Dynamics," *Proc. 2019 IEEE International Conference on Robotics and Automation (ICRA),* May 20-24, 2019, Montréal, Canada. *These authors contributed equally to this work.
101. J. C. Castillo-Rogez, K. J. Meech, S.-J. Chung, and D. Landau, "Approach to Exploring Interstellar Objects and Long-Period Comets," *Proc. 29th AAS/AIAA Space Flight Mechanics Meeting*, January 13-17, 2019, AAS 19-436.
100. V. Capuano, S. R. Alimo, A. Q. Ho, and S.-J. Chung, "Robust Feature Extraction for On-board Monocular-based Spacecraft Pose Acquisition," *Proc. 2019 AIAA SciTech Forum*, San Diego, CA January 7–11, 2019.
99. K. Kim, S. Rahili, X. Shi, S.-J. Chung, and M. Gharib, "Controllability and Design of Unmanned Multirotor Aircraft Robust to Rotor Failure," *Proc. 2019 AIAA SciTech Forum*, San Diego, CA, January 7–11, 2019.
98. R. Foust, S.-J. Chung, and F. Y. Hadaegh, "Solving Optimal Control with Nonlinear Dynamics using Sequential Convex Programming," *Proc. AIAA Guidance, Navigation, and Control Conference*, San Diego, CA, January 7–11, 2019.
97. X. Shi, K. Kim, S. Rahili, and S.-J. Chung, "Nonlinear Control of Autonomous Flying Cars with Wings and Distributed Electric Propulsion," *Proc. the 2018 IEEE Conference on Decision and Control (CDC)*, Fontainebleau, Miami Beach, FL, Dec. 17-19, 2018.
96. S. Rahili, B. Riviere, S. Oliver, and S.-J. Chung, "Optimal Routing for Autonomous Taxis and Ridesharing: Distributed Reinforcement Learning Approach," *IEEE ICDM 2018 Workshops Proc. of 1st Workshop on Data-driven Intelligent Transportation (DIT 2018)*, Singapore, 17 November 2018.
95. F. Baldini, A. Harvard, S.-J. Chung, I. Nesnas, and S. Bhaskaran, "Autonomous Small Body Mapping and Spacecraft Navigation," *Proc. 69th International Astronautical Congress*, Bremen, Germany, 1 – 5 October 2018.
94. V. Capuano, K. Kim, J. Hu, A. Harvard, and S.-J. Chung, "Monocular-Based Pose Determination of Uncooperative Known and Unknown Space Objects," *Proc. 69th International Astronautical Congress*, Bremen, Germany, 1 – 5 October 2018.
93. R. C. Foust, E. S. Lupu, Y. K. Nakka, S.-J. Chung, and F. Y. Hadaegh, "Ultra-Soft Electromagnetic Docking with Applications to In-Orbit Assembly," *Proc. 69th International Astronautical Congress*, Bremen, Germany, 1-5 October 2018.
92. Y. K. Nakka, R. C. Foust, E. S. Lupu, D. B. Elliott, I. S. Crowell, S.-J. Chung, and F. Y. Hadaegh, "A Six Degree-Of-Freedom Spacecraft Dynamics Simulator for Formation Control Research," *the 2018 AAS/AIAA Astrodynamics Specialist Conference*, Snowbird, Utah, August 19-23, 2018.
91. R. C. Foust, M. Zhao, S. Oliver, S.-J. Chung, and F. Y. Hadaegh, F.Y, "Distributed Control of An Evolving Satellite Assembly During In-Orbit Construction," *International Astronautical Congress*, Adelade, Australia, September 25-29, 2017.
90. S. Bandyopadhyay, F. Baldini, R. Foust, S.-J. Chung, A. Rahmani, J.-P. de la Croix, and F. Y. Hadaegh, "Distributed Spatiotemporal Motion Planning for Spacecraft Swarms in Cluttered Environments," *AIAA Space*, Orlando, Florida, Sep. 2017.
89. U. A. Syed, A. Ramezani, S.-J. Chung, and S. Hutchinson, "From Rousettus aegyptiacus (bat) Landing to Robotic Landing: Regulation of CG-CP Distance Using a Nonlinear Closed-Loop Feedback," *Proc. 2017 IEEE International Conference on Robotics and Automation (ICRA)*, Singapore, May 29 - June 3, 2017.
88. A. Ramezani, U. A. Syed, J. Hoff, S.-J. Chung, and S. Hutchinson, "Describing Robotic Bat Flight with Stable Periodic Orbits," *Living Machines VI: The 6th International Conference on Biomimetic and Biohybrid Systems*, Stanford University, July 25-28, 2017.
87. J. Hoff, A. Ramezani, S.-J. Chung, and S. Hutchinson, "Reducing Versatile Bat Wing Conformations to a 1-DoF Machine," *Living Machines VI: The 6th International Conference on Biomimetic and Biohybrid Systems*, Stanford University, July 25-28, 2017.
86. A. Goel, S.-J. Chung, and S. Pellegrino, "Trajectory Design of a Spacecraft Formation for Space-Based Solar Power Using Sequential Convex Programming," *Proc. 9th International Workshop on Satellite Constellations and Formation Flying (IWSCFF)*, Boulder, Colorado, June 19-21, 2017.

85. R. C. Foust, Y. K. Nakka, A. Saxena, S.-J. Chung, and F. Y. Hadaegh, "Automated Rendezvous and Docking Using Tethered Formation Flight," *Proc. 9th International Workshop on Satellite Constellations and Formation Flying (IWSCFF)*, Boulder, Colorado, June 19-21, 2017.
84. S. Bandyopadhyay, F. Baldini, R. Foust, S.-J. Chung, A. Rahmani, J.-P. de la Croix, and F. Y. Hadaegh, "Distributed Fast Motion Planning for Spacecraft Swarms in Cluttered Environments Using Spherical Expansions and Sequence of Convex Optimization Problems," *Proc. 9th International Workshop on Satellite Constellations and Formation Flying (IWSCFF),* Boulder, Colorado, June 19-21, 2017.
83. A. A. Paranjape and S.-J. Chung, "Sub-Optimal Boundary Control of Semilinear PDEs using a Dyadic Perturbation Observer," *Proc. 55th IEEE Conference on Decision and Control (CDC)*, Las Vegas, NV, Dec. 2016.
82. K. Meier, S.-J. Chung, and S. Hutchinson, "Visual-Inertial Curve SLAM," *Proc. 2016 IEEE/RSJ International Conference on Intelligent Robots and Systems (IROS)*, Daejeon, Korea, October 9-14, 2016.
81. S. Bandyopadhyay, S.-J. Chung, and F. Y. Hadaegh, "A Probabilistic Eulerian Approach for Motion Planning of a Large-Scale Swarm of Robots," *Proc. 2016 IEEE/RSJ International Conference on Intelligent Robots and Systems (IROS)*, Daejeon, Korea, October 9-14, 2016.
80. F. Baldini, R. Foust, A. Bacula, C. M. Chilan, S.-J. Chung, S. Bandyopadhyay, A. Rahmani, J.-P. de la Croix, and F. Y. Hadaegh, "Spacecraft Trajectory Planning using Spherical Expansion and Sequential Convex Programming," *AIAA/AAS Astrodynamics Specialist Conference, AIAA SPACE and Astronautics Forum and Exposition*, Long Beach, CA, 13-16 Sep 2016.
79. G. Falcone, A. Saxena, S.-J. Chung, S. Bandyopadhyay, G. Singh, A. San Martin, and F. Y. Hadaegh, "Attitude Control of Asteroid Redirect Mission Spacecraft with a Captured Boulder," *AIAA/AAS Astrodynamics Specialist Conference, AIAA SPACE and Astronautics Forum and Exposition*, Long Beach, CA, 13-16 Sep 2016.
78. R. Foust, S.-J. Chung, and F. Y. Hadaegh, "Autonomous In-Orbit Satellite Assembly from a Modular Heterogeneous Swarm using Sequential Convex Programming," *AIAA/AAS Astrodynamics Specialist Conference, AIAA SPACE and Astronautics Forum and Exposition*, Long Beach, CA, 13-16 Sep 2016.
77. J. Hoff, A. Ramezani, S.-J. Chung, and S. Hutchinson, "Synergistic Design of a Bio-Inspired Micro Aerial Vehicle with Articulated Wings," *The Robotics: Science and Systems Conference (RSS)*, Ann Arbor, Michigan, June 18-22, 2016.
76. A. Ramezani, X. Shi, S.-J. Chung, and S. Hutchinson, "Bat Bot (B2), A Biologically Inspired Flying Machine," *Proc. IEEE International Conference on Robotics and Automation (ICRA)*, Stockholm, Sweden, May 16-21, 2016. (Acceptance rate: 34.7%)
75. R. Foust, S.-J. Chung, and F. Y. Hadaegh, "Real-Time Optimal Control and Target Assignment for Autonomous In-Orbit Satellite Assembly from a Modular Heterogeneous Swarm," *26th AAS/AIAA Space Flight Mechanics Meeting*, Napa, California, February 14-18, 2016.
74. O. Alvarez-Salaza, J. Aldrich, N Filipe, J. Allison, and S.-J. Chung, "Strain Actuated Solar-Arrays for Precision Pointing of Spacecraft," *AAS Guidance, Navigation, and Control Conference*, Breckenridge, Colorado, Feb. 2016. AAS 16-137.
73. C. M. Chilan, D. R. Herber, Y. K. Nakka, S.-J. Chung, J. T. Allison, J. B. Aldrich, and O. S. Alvarez-Salazar, "Co-Design of Strain-Actuated Solar Arrays for Precision Pointing and Jitter Reduction," *57th AIAA/ASCE/AHS/ASC Structures, Structural Dynamics, and Materials Conference*, San Diego, CA, 4-8 Jan 2016, AIAA 2016-016.
72. A. Ramezani, X. Shi, S.-J. Chung, and S. Hutchinson, "Modeling and Nonlinear Flight Controller Synthesis of a Bat-Inspired Micro Aerial Vehicle," *AIAA Guidance, Navigation, and Control Conference*, San Diego, CA, 4-8 Jan 2016, AIAA 2016-1376.
71. S. Gade, A. Paranjape, and S.-J. Chung, "Robotic Herding using Wavefront Algorithm: Performance and Stability," *AIAA Guidance, Navigation, and Control Conference*, San Diego, CA, 4-8 Jan 2016, AIAA 2016-1378.
70. A. A. Paranjape and S.-J. Chung, "Output Feedback Stabilization of Linear PDEs with Finite Dimensional Input-Output Maps and Kelvin-Voigt Damping," *IEEE Conference on Decision and Control (CDC)*, Osaka, Japan, Dec. 15-18, 2015, pp. 578-583. (Acceptance rate: 59.5%)

69. A. Ramezani, X. Shi, S.-J. Chung, and S. Hutchinson, "Lagrangian Modeling and Flight Control of Articulated-Winged Bat Robot," *Proc. 2015 IEEE/RSJ International Conference on Intelligent Robots and Systems (IROS)*, Hamburg, Germany, September 28 - October 02, 2015. (Acceptance rate: 46%)
68. S. Bandyopadhyay, S.-J. Chung, and F. Y. Hadaegh, "Feedback-Based Inhomogeneous Markov Chain Approach to Probabilistic Swarm Guidance," *8th International Workshop on Satellite Constellations and Formation Flying (IWSCFF)*, Delft, Netherlands, June 8-10, 2015.
67. S. Bandyopadhyay and S.-J. Chung, "Nonlinear Attitude Control of Spacecraft with a Captured Asteroid," *8th International Workshop on Satellite Constellations and Formation Flying (IWSCFF)*, Delft, Netherlands, June 8-10, 2015.
66. J. Yang, S.-J. Chung, S. Hutchinson, D. Johnson, M. Kise, "Omnidirectional-Vision-Based Estimation for Containment Detection of a Robotic Mower," *IEEE International Conference on Robotics and Automation (ICRA)*, Seattle, Washington, May 26-30, 2015. (Acceptance rate: 41%)
65. S. Bandyopadhyay, S.-J. Chung, and F. Y. Hadaegh, "Attitude Control and Stabilization of Spacecraft with a Captured Asteroid," *AIAA Guidance, Navigation, and Control Conference*, Kissimmee, Florida, 5-9 Jan 2015, AIAA 2015-0596.
64. D. Morgan, S.-J. Chung, and F. Y. Hadaegh, "Swarm Assignment and Trajectory Optimization Using Variable-Swarm, Distributed Auction Assignment and Model Predictive Control," *AIAA Guidance, Navigation, and Control Conference*, Kissimmee, Florida, 5-9 Jan 2015, AIAA 2015-0599. Best Paper Award in the AIAA GNC Conference.
63. G. P. Subramanian, R. Foust, D. Chen, S. Chan, Y. Taleb, D. Rogers, J. Kokkat, S. Bandyopadhyay, D. Morgan, S.-J. Chung, and F. Y. Hadaegh, "Information-Driven Systems Engineering Study of a Formation Flying Demonstration Mission using Six CubeSats," *53rd AIAA Aerospace Sciences Meeting*, Kissimmee, Florida, 5-9 Jan 2015, AIAA 2015-2043.
62. S. Bandyopadhyay, G. P. Subramanian, R. Foust, D. Morgan, S. Chan, S.-J. Chung, and F. Y. Hadaegh, "A Review of Impending Small Satellite Formation Flying Missions," *53rd AIAA Aerospace Sciences Meeting*, Kissimmee, Florida, 5-9 Jan 2015, AIAA 2015-1623.
61. S. Gade, A. Paranjape, and S.-J. Chung, "Herding a Flock of Birds Approaching an Airport Using an Unmanned Aerial Vehicle," *AIAA Guidance, Navigation, and Control Conference*, Kissimmee, Florida, 5-9 Jan 2015, AIAA 2015-1540.
60. A. A. Paranjape and S.-J. Chung, "Dyadic Perturbation Observer Framework for Control of a Class of Nonlinear PDE/ODE Systems," *Proc. 53rd IEEE Conference on Decision and Control (CDC)*, Los Angeles, CA, December 2014.
59. S. Bandyopadhyay, **S.-J. Chung**, F. Y. Hadaegh, "Probabilistic Swarm Guidance using Optimal Transport," *2014 IEEE Conference on Control Applications (CCA), IEEE Multi-conference on Systems and Control (MSC)*, Antibes, France, Oct. 8-10, 2014. **Best Student Paper Finalist**
58. D. Morgan, G. P. Subramanian, S. Bandyopadhyay, **S.-J. Chung**, F. Y. Hadaegh, "Probabilistic Guidance of Distributed Systems using Sequential Convex Programming," *IEEE/RSJ International Conference on Intelligent Robots and Systems (IROS)*, Chicago, Illinois, Sept. 14-18, 2014, pp. 3850-3857. **(Acceptance rate: 47%)**
57. S. Bandyopadhyay and **S.-J. Chung**, "Distributed Estimation using Bayesian Consensus Filtering," *Proc. American Control Conference (ACC)*, Portland, Oregon, June 4-6 2014, pp. 634-641.
56. J. Yu, **S.-J. Chung**, and P. G. Voulgaris, "Traveled Distance Minimization and Hierarchical Strategies for Robotic Networks," *2014 International Symposium on Communications, Control, and Signal Processing (ISCCSP)*, May 22-23, Athens, Greece, 2014, pp. 491-496.
55. J. Yu, **S.-J. Chung**, and P. G. Voulgaris, "Distance Optimal Target Assignment in Robotic Networks under Communication and Sensing Constraints," *IEEE International Conference on Robotics and Automation (ICRA)*, Hong Kong, China, May 31 - June 7, 2014, pp. 1098-1105. **(Acceptance rate: 48%)**
54. J. Yang, **S.-J. Chung**, S. Hutchinson, D. Johnson, M. Kise, "Vision-Based Localization and Mapping for an Autonomous Mower," *IEEE/RSJ International Conference on Intelligent Robots and Systems (IROS)*, Tokyo, Japan, November 3-7, 2013, pp. 3655-3662. **(Acceptance rate: 43%)**

53. A. A. Paranjape, K. Meier, **S.-J. Chung**, and S. Hutchinson, "Motion Primitives and 3-D Path Planning for Fast Flight through a Forest," *IEEE/RSJ International Conference on Intelligent Robots and Systems (IROS)*, Tokyo, Japan, November 3-7, 2013, pp. 2940-2947. **(Acceptance rate: 43%)**
52. A. Dani, G.Panahandeh, **S.-J. Chung**, and S. Hutchinson, "Image Moments for Higher-Level Feature Based Navigation," *IEEE/RSJ International Conference on Intelligent Robots and Systems (IROS)*, Tokyo, Japan, November 3-7, 2013, pp. 602-609. **(Acceptance rate: 43%)**
51. A. Paranjape, **S.-J. Chung**, H. H. Hilton, "Optimizing the Forces and Propulsive Efficiency in Bird-Scale Flapping Flight," *AIAA Atmospheric Flight Mechanics (AFM) Conference*, Boston, MA, August 2013, AIAA 2013-4916.
50. J. Yang, A. Dani, **S.-J. Chung**, and S. Hutchinson, "Inertial-Aided Vision-Based Localization and Mapping in a Riverine Environment with Reflection Measurements," *AIAA Guidance, Navigation, and Control (GNC) Conference*, Boston, MA, August 2013, AIAA 2013-5246.
49. A. Paranjape, **S.-J. Chung**, and S. Hutchinson, "Optimum Spatially Constrained Turns for Agile Micro Aerial Vehicles," *AIAA Guidance, Navigation, and Control (GNC) Conference*, Boston, MA, August 2013, AIAA 2013-4941.
48. S. Bandyopadhyay, **S.-J. Chung**, and F. Y. Hadaegh, "Inhomogeneous Markov Chain Approach to Probabilistic Swarm Guidance Algorithm," May 2013, *5th Int. Conf. on Spacecraft Formation Flying Missions and Technologies (SFFMT)*, Munich, Germany.
47. D. Morgan, **S.-J. Chung**, and F. Y. Hadaegh, "Decentralized Model Predictive Control of Swarms of Spacecraft," May 2013, *5th Int. Conf. on Spacecraft Formation Flying Missions and Technologies (SFFMT)*, Munich, Germany.
46. D. Morgan, **S.-J. Chung**, and F. Y. Hadaegh, "Decentralized Model Predictive Control of Swarms of Spacecraft Using Sequential Convex Programming," *Proc. 23rd AAS/AIAA Space Flight Mechanics Meeting*, Kauai, Hawaii, February 10-14, 2013, AAS 13-439.
45. A. P. Dani, **S.-J. Chung**, and S. Hutchinson, "Observer Design for Stochastic Nonlinear Systems using Contraction Analysis," *Proc. IEEE Conference on Decision and Control (CDC)*, Maui, HI, December 2012, pp. 6028-6035. **(Acceptance rate: 53%)**
44. A. Paranjape, J. Guan, **S.-J. Chung**, M. Krstic, "PDE Boundary Control for Euler-Bernoulli Beam Using a Two Stage Perturbation Observer," *Proc. IEEE Conference on Decision and Control (CDC)*, Maui, HI, December 2012, pp. 4442-4448. **(Acceptance rate: 53%)**
43. D. Rao, **S.-J. Chung**, and S. Hutchinson, "CurveSLAM: An approach for Vision-based Navigation without Point Features," *IEEE/RSJ International Conference on Intelligent Robots and Systems (IROS)*, Vilamoura, Algarve, Portugal, October 7-12, 2012, pp. 4198-4204. **(Acceptance rate: 45%)**
42. D. Morgan, **S.-J. Chung**, and F. Y. Hadaegh, "Spacecraft Swarm Guidance Using a Sequence of Decentralized Convex Optimizations," *AIAA/AAS Astrodynamics Specialist Conference*, Minneapolis, MN, August 2012, AIAA-2012-4583.
41. A. Paranjape, J. Kim, and **S.-J. Chung**, "Closed-Loop Perching and Spatial Guidance Laws for Bio-Inspired Articulated Wing MAV," *AIAA Guidance, Navigation, and Control (GNC) Conference*, Minneapolis, MN, August 2012, AIAA-2012-4979.
40. W. Lai, A. F. Bastawros, W. Hong, and **S.-J. Chung**, "Fabrication and Analysis of Planar Dielectric Elastomer Actuators Capable of Complex 3-D Deformation," *Proc. IEEE International Conference on Robotics and Automation (ICRA),* St. Paul, Minnesota, May 14-18, 2012, pp. 4968-4973. **(Acceptance rate: 40%)**
39. A. Paranjape, **S.-J. Chung**, and M. Krstic, "PDE Boundary Control for Flexible Articulated Aircraft Wings," *Proc. AIAA Guidance, Navigation, and Control Conference (GNC)*, Portland OR, August 2011, AIAA-2011-6486.
38. A. Paranjape, J. Kim, N. Gandhi, and **S.-J. Chung**, "Experimental Demonstration of Perching by an Articulated Wing MAV," *Proc. AIAA Guidance, Navigation, and Control (GNC) Conference*, Portland OR, August 2011, AIAA-2011-6403.
37. D. Morgan, **S.-J. Chung**, L. Blackmore, B. Acikmese, D. Bayard, and F. Y. Hadaegh, "Swarm Keeping Strategies for Spacecraft under J2 and Atmospheric Drag Perturbations," *Proc. AIAA Guidance, Navigation, and Control (GNC) Conference*, Portland, OR, August 2011, AIAA-2011-6632.

36. **S.-J. Chung**, I. Chang, and F. Y. Hadaegh, "Phase Synchronization Control of Robotic Networks on Periodic Ellipses with Adaptive Network Topologies," *Proc. AIAA Guidance, Navigation, and Control (GNC) Conference*, Portland, OR, August 2011, AIAA-2011-6631.
35. **S.-J. Chung** and F. Y. Hadaegh, "Swarms of Femtosats for Synthetic Aperture Applications," *4th International Conference on Spacecraft Formation Flying Missions and Technologies (SFFMT)*, St-Hubert, Quebec, May 18-20, 2011.
34. I. Chang, **S.-J. Chung**, and F. Y. Hadaegh, "Novel Coordinate Transformation and Robust Cooperative Formation Control for Swarms of Spacecraft,"*4th International Conference on Spacecraft Formation Flying Missions and Technologies (SFFMT)*, St-Hubert, Quebec, May 18-20, 2011.
33. D. Morgan, **S.-J. Chung**, L. Blackmore, B. Acikmese, D. Bayard, and F. Y. Hadaegh, "Dynamics and Control Challenges of Spacecraft Swarms under the Influence of J2 Gravity and Atmospheric Drag," *4th International Conference on Spacecraft Formation Flying Missions and Technology (SFFMT)*, St-Hubert, Quebec, May 18-20, 2011.
32. M. Duffy, **S.-J. Chung**, and L. A. Bergman, "An Evolutionary Architecture for the Automated Conceptual Design of Aerospace Systems," *AIAA Infotech@Aerospace Conference,* St. Louis, MO, Mar. 2011, AIAA-2011-1632.
31. P. D. Kuang, M. Dorothy, and **S.-J. Chung**, "RoboBat: Dynamics and Control of a Robotic Bat Flapping Flying Testbed," *AIAA Infotech@Aerospace Conference*, St. Louis, MO, Mar. 2011, AIAA-2011-1435.
30. J. Yang, D. Rao, **S.-J. Chung**, and S. Hutchinson, "Monocular Vision SLAM for MAV in GPS-denied Riverine Environments," *AIAA Infotech at Aerospace Conference*, St. Louis, MO, Mar. 2011, AIAA-2011-1403.
29. B. Aubin, B. Conway, and **S.-J. Chung**, "Finding Optimal Relative Orbit Transfer Trajectories with the Particle Swarm Algorithm and Primer Vector Theory," *21st AAS/AIAA Space Flight Mechanics Meeting*, New Orleans, Louisiana, February 2011, AAS 11-160.
28. I. Chang, **S.-J. Chung** and L. Blackmore, "Cooperative Control with Adaptive Graph Laplacians for Spacecraft Formation Flying," *49th IEEE Conference on Decision and Control (CDC)*, Atlanta, GA, Dec. 2010, pp. 4926–4933. **(Acceptance rate: 62%)**
27. **S.-J. Chung** and J.-J.E. Slotine, "On Synchronization of Coupled Hopf-Kuramoto Oscillators with Phase Delays," *49th IEEE Conference on Decision and Control (CDC)*, Atlanta, GA, Dec. 2010, pp. 3181-3187. **(Acceptance rate: 62%)**
26. A. Paranjape, A. Chakravarthy, **S.-J. Chung**, and H. H. Hilton, "Performance and Stability of an Agile Tail-less MAV with Flexible Articulated Wings ," *AIAA Atmospheric Flight Mechanics Conference*, Toronto, Ontario, Aug. 2010, AIAA-2010-7937.
25. A. Chakravarthy, A. Paranjape, and **S.-J. Chung**, "Control Law Design for Perching an Agile MAV with Articulated Wings," *AIAA Atmospheric Flight Mechanics Conference*, Toronto, Ontario, Aug. 2010, AIAA-2010-7934.
24. M. Dorothy and **S.-J. Chung**, "Methodological Remarks on CPG-Based Control of Flapping Flight," *AIAA Atmospheric Flight Mechanics Conference*, Toronto, Ontario, Aug. 2010, AIAA-2010-7634.
23. A. Paranjape and **S.-J. Chung**, "Flight Mechanics of a Tailless Articulated Wing Aircraft," *AIAA Atmospheric Flight Mechanics Conference*, Toronto, Ontario, Aug. 2010, AIAA-2010-7633.
22. I. Chang and **S.-J. Chung**, "Exponential Stability Region Estimates for the State-Dependent Riccati Equation Controllers," *48th IEEE Conference on Decision and Control Conference (CDC)*, Shanghai, Dec. 2009, pp. 1974 - 1979. **(Acceptance rate: 47%)**
21. K. Celik, **S.-J. Chung**, M. Clausman, and A. K. Somani, "Monocular Vision SLAM for Indoor Aerial Vehicles," *Proc. 2009 IEEE/RSJ International Conference on Intelligent Robots and Systems (IROS)*, St. Louis, MO, October 2009, pp. 1566-1573.
20. I. Chang and **S.-J. Chung**, "Bio-Inspired Adaptive Cooperative Control of Heterogeneous Robotic Networks," *2009 AIAA Guidance, Navigation, and Control (GNC) Conference and Exhibit*, Chicago, IL, August 2009, AIAA 2009-5886.

19. K. Celik, **S.-J. Chung**, and A. K. Somani, "Biologically Inspired Monocular Vision Based Navigation and Mapping in GPS-Denied Environments," *AIAA Infotech at Aerospace and Unmanned Unlimited Conference and Exhibit*, Seattle, WA, 6-9 April 2009, AIAA-2009-1962.
18. **S.-J. Chung**, J. Stoner, and M. Dorothy, "Neurobiologically Inspired Control of Engineered Flapping Flight," *AIAA Infotech@Aerospace and Unmanned Unlimited Conference and Exhibit*, Seattle, WA, 6-9 April 2009, AIAA-2009-1929. **Best Paper Award**.
17. K. Berg-Taylor, K. Seo, and **S.-J. Chung**, "Sensor Based Path Planning in Highly Constrained Environments for Agile Autonomous Vehicles," *Proc. of the AIAA Guidance, Navigation, and Control Conference and Exhibit*, Honolulu, HI, August 2008, AIAA-2008-7168.
16. K. Celik, **S.-J. Chung**, and A. K. Somani, "MVCSLAM: Mono-Vision Corner SLAM for Autonomous Micro-Helicopters in GPS Denied Environments," *Proc. of the AIAA Guidance, Navigation, and Control Conference and Exhibit*, Honolulu, HI, August 2008, AIAA-2008-6670.
15. **S.-J. Chung**, U. Ahsun, and J.-J.E. Slotine, "Attitude and Phase Synchronization of Formation Flying Spacecraft: Lagrangian Approach," *Proc. of the AIAA Guidance, Navigation, and Control Conference and Exhibit*, Honolulu, HI, August 2008, AIAA-2008-6472.
14. K. Berg-Taylor, K. Seo, and **S.-J. Chung**, "Development of a Car-like Online Navigation Testbed," *IEEE International Conference on Electro/Information Technology (EIT)*, Ames, IA, May 2008, pp. 337 - 342.
13. K. Celik, **S.-J. Chung**, and A. Somani, "Mono-Vision Corner SLAM for Indoor Navigation," *IEEE International Conference on Electro/Information Technology (EIT)*, Ames, IA, May 2008, pp. 343-348. **Best Paper Award**.
12. K. Seo, **S.-J. Chung**, and J.-J. E. Slotine, "CPG-based Control of a Turtle-like Underwater Vehicle," June 25-28, 2008, *Proceedings of the 2008 Robotics: Science and Systems Conference (RSS)*, Switzerland, pp. 127-134. **(Acceptance rate: 25.8%)**
11. **S.-J. Chung**, and J.-J. E. Slotine, "Cooperative Robot Control and Synchronization of Lagrangian Systems," *Proceedings of the 46th IEEE Conference on Decision and Control (CDC)*, New Orleans, LA, December 2007, pp. 2504-2509.
10. **S.-J. Chung**, U. Ahsun, J.-J. E. Slotine, and D. W. Miller, "Application of Synchronization to Cooperative Control and Formation Flight of Spacecraft," *Proceedings of the AIAA Guidance, Navigation and Control Conference*, Hilton Head, SC, 2007, AIAA-2007-6861.
9. **S.-J. Chung**, J.-J. E. Slotine, and D. W. Miller, "New Control Strategies for Underactuated Tethered Formation Flight Spacecraft," *Proceedings of the AIAA Guidance, Navigation and Control Conference*, Hilton Head, SC, 2007, AIAA-2007-6858.
8. **S.-J. Chung**, "Nonlinear Model Reduction and Decentralized Control of Tethered Formation Flight by Oscillation Synchronization," *Proceedings of the AIAA Guidance, Navigation and Control Conference*, Keystone, Colorado, August 2006, AIAA-2006-6589. **Finalist, Best Student Paper Award**
7. **S.-J. Chung**, D. Adams, D. W. Miller, E. Lorenzini, and D. Leisawitz, "SPHERES Tethered Formation Flight Testbed: Advancements in Enabling NASA's SPECS Mission," *Proceedings of Astronomical Telescopes and Instrumentation 2006 Conference*, SPIE Paper No. 6268-11, May 2006.
6. **S.-J. Chung**, E. M. Kong, and D. W. Miller, "Dynamics and Control of Tethered Formation Flight Spacecraft Using the SPHERES Testbed," *Proceedings of AIAA Guidance, Navigation, and Control Conference*, San Francisco, August 2005, AIAA-2005-6089.
5. **S.-J. Chung**, E. Kong, and D. W. Miller, "SPHERES Tethered Formation Flight Testbed: Application to NASA's SPECS Mission," *Proceedings of the SPIE Optics and Photonics 2005. UV/Optical/IR Space Telescopes: Innovative Technologies and Concepts II Conference*, Vol. 5899, San Diego, CA, August 2005, pp. 196-208.
4. D. Lobosco, C. Blaurock, **S.-J. Chung**, D. W. Miller, "Integrated modeling of optical performance for the Terrestrial Planet Finder structurally connected interferometer," *Proceedings of the SPIE Astronomical Telescopes and Instrumentation Conference*, Vol. 5497, June 2004, Glasgow, Scotland United Kingdom, pp. 278-289.
3. **S.-J. Chung**, D. Lobosco, D. W. Miller and C. Blaurock, "Multidisciplinary Control of a Sparse Interferometric Array Satellite Testbed," *Proceedings of the AIAA Guidance, Navigation, and Control Conference*, Austin, Texas, August 2003, AIAA-2003-5433.

2. **S.-J. Chung**, D. W. Miller, and O. L. de Weck, "Design and Implementation of Sparse Aperture Imaging Systems," *SPIE Astronomical Telescopes and Instrumentation Conference*, Waikoloa, Hawaii, August 2002, Proceedings of the SPIE 4849-25, p.181-192.
1. **S.-J. Chung** and D. W. Miller, "Design, Implementation and Operation of a Sparse Aperture Imaging Satellite Testbed," August 2002, *Proceedings of the 16th Annual AIAA/USU Conference on Small Satellites*, Logan, Utah.

e. Other Publications (Books and Reports)

1. S. Cho, **S.-J. Chung**, *et al.*, **CBT TOEFL Know-How**, a book of study strategies for the TOEFL English Test, 332 pages, SodamQ press, in Korean, 2001, ISBN-13 9788973815050, ISBN-10 8973815059.
2. Soon-Jo Chung "Design, Implementation and Control of a Sparse Aperture Imaging Satellite" MIT Space Systems Lab (SSL) Report no. 19-02, **MIT Master of Science (SM) Thesis**, September 2002. Advisor: David W. Miller
3. Soon-Jo Chung, "Nonlinear Control and Synchronization of Multiple Lagrangian Systems with Application to Tethered Formation Flight Spacecraft," MIT Space Systems Lab (SSL) Report no. 7-07: **MIT Doctor of Science (ScD) Thesis**, June 2007.
   Thesis supervisor: David W. Miller and Co-advisor: Jean-Jacques E. Slotine

f. Patents

1. A. A. Paranjape and S.-J. Chung, "**Controlled Transitory or Sustained Gliding Flight with Dihedral Angle and Trailing Flaps**," **US Patent No.: US 9,394,050 B2**, Date of Patent: July 19, 2016.
2. X. Shi, M. Veismann, C. Dougherty, S. Rider, S.-J. Chung, M. Gharib, and K. Kim, S. Rahili "**Autonomous Flying Ambulance**," **US Patent No.: US 11,072,421 B2**, Date of Patent: July 27, 2021.
3. S.-J. Chung, A. A. Paranjape, and K. Kim, "Systems and Methods for Avian Flock Flight Path Modification using UAVs," US20200031465A1. Non-Provisional US Patent Application filed on 7/26/2019.
4. G. Shi, X. Shi, M. T. O'Connell, A. Anandkumar, Y. Yue, and S.-J. Chung, "**Systems and Methods for Robust Learning-Based Control During Forward and Landing Flight Under Uncertain Conditions**," **US Patent No.: US11,693,373 B2**, Date of Patent: Jul. 4, 2023.
5. V. Capuano, A. Harvard, and S.-J. Chung, "**Systems and Methods for Robust and Accurate Relative Navigation**," **US Patent No.: 11,733,399 B2**, Date of Patent: August 22, 2023.
6. Xichen Shi; Patrick Spieler; Ellande Tang; Elena S. Lupu; Soon-Jo Chung, "**Airflow Sensing Based Adaptive Nonlinear Flight Control of a Flying Car or Fixed-Wing VTOL**," **US Patent No.: US11,733,715 B2**, Date of Patent: Aug. 22, 2023.
7. S.-J. Chung, *et al.*, LEONARDO: Synchronized Aerial and Legged Robot, pending nonprovisional application, 2020.
8. Ellande Tang, Patrick Spieler, Matthew J Anderson, and Soon-Jo Chung, "Autonomous Multi-Purpose Heavy Lift VTOL," pending nonprovisional application, 2021.

g. <u>Museum Exhibit</u>

Bat Bot (B2), Animals: Respect, Harmony, and Subjugation, Museum of Arts and Crafts in Hamburg, November 2017-March 2018. Special display of our Bat Bot (B2) along with the work of Albrecht Dürer and Alexander von Humboldt

h. Invited Lectures

Title	Conference	Location	Date
Spacecraft Swarms: Opportunities and Challenges Using AI **(Plenary Speaker)**	RAST 2023, 10th International Conference on Recent Advances in Air and Space Technology	Istanbul, Turkiye	6/7/2023
Safe and Stable Learning for Agile Robots without Reinforcement Learning	Invited Seminar	Italian Institute of Technology, Genova	6/5/2023
Safe and Stable Learning for Agile Robotics	Invited Seminar	Imperial College London	6/2/2023
Safety and Stability of Drones and UAVs Using AI and Machine Learning **(Keynote Speaker)**	2023 Drone Show Korea	Busan, South Korea	2/23/2023
Contraction Theory for Safe, Stable, and Robust Learning-based Control and Planning **(Keynote Speaker)**	19th International Conference on Informatics in Control, Automation and Robotics (ICINCO)	Lisbon, Portugal	7/14/2022
Safe and Stable Learning for Agile Robots without Reinforcement Learning **(Invited Speaker)**	Agile Robotics: Perception, Learning, Planning, and Control, IEEE/RSJ IROS	Kyoto, Japan	October 27, 2022
Neural-Fly Enables Rapid Learning for Agile Flight in Strong Winds	Federal Aviation Administration (FAA) Aerospace Human Factors Research Division	Virtual talk for Federal Aviation Administration (FAA)	6/16/2022
Contraction Theory for Safe, Stable, and Robust Learning-based Control and Planning	Controls, Autonomy, and Robotics seminar series	University of Texas at Austin	4/14/2022
Contraction Theory for Safe, Stable, and Robust Learning-based Control and Planning: A Tutorial Overview	Special Seminar, KTH Royal Institute of Technology	Virtual	3/17/2022
Contraction Theory for Designing Safe, Stable, and Robust Learning-based GNC: A Tutorial Overview	JPL Autonomy Seminar Series	Virtual Talk (with Hiroyasu Tsukamoto)	3/2/2022
How to combine Machine Learning / Artificial Intelligence (ML/AI) with GNC	AIAA LA-LV Section Invited Talk	Virtual talk	8/28/2021
How to Combine AI/ML with Autonomous GNC **(Plenary Speaker)**	Learning for Estimation, Guidance, Navigation, and Control Workshop Presentations (organized by Raytheon)	Virtual talk	7/15/2021

Title	Conference	Location	Date
Aerospace Robotics and Autonomy Research at Caltech (AI/ML + Robotics)	SoCal Alliance Robotics program	Virtual talk	7/13/2021
How to Combine Machine Learning with Robot Control, Navigation, and Planning **(Plenary Speaker)**	The 36th ICROS Annual Conference	Yeosu, South Korea (virtual talk)	6/24/2021
"Future of Aerospace Autonomy: How to Integrate Machine Learning with Guidance, Navigation, and Control	Aerospace Control and Guidance Systems Committee Meeting #126	Virtual ACGSC meeting	3/26/2021
How to Combine Machine Learning with Guidance, Navigation, and Control?	WVU Robotics Seminar Series	West Virginia University (virtual)	3/15/2021
Learning-Based Planning and Control with Uncertainty, Nonlinear Stochastic Dynamics, and Chance Constraints **(Keynote Speaker)**	IROS 2020 Workshop on Perception, Planning and Mobility in Forestry Robotics (WPPMFR 2020)	IEEE/RSJ International Conference on Intelligent Robots and Systems (IROS)	10/29/2020
Future of Aerospace Autonomy: How to Integrate ML with Control Theory and Robotics?	Boeing seminar series (worldwide)	Boeing (virtual talk)	5/29/2020
Future of Aerospace Autonomy: How to Integrate ML with Control Theory and Robotics?	JPL Autonomy Seminar	JPL (virtual talk)	5/27/2020
Future of Aerospace Autonomy: How to Integrate ML with GNC	GALCIT Colloquium	Caltech (virtual talk)	5/22/2020
Multi-agent cooperative control and estimation for flying cars and spacecraft swarms	Aerospace Controls: Current Topics in Theory and Practice	American Control Conference, Philadelphia	7/8/2019
Multi-agent cooperative control and estimation for flying cars and spacecraft swarms	Invited Seminar (Host: Prof. Emilio Frazzoli)	ETH, Zurich	6/28/2019
Autonomous Space Swarms and In-Orbit Construction **(Keynote Speaker)**	NTU-Caltech Space Symposium	Nanyang Technological University, Singapore	2/14/2019

Title	Conference	Location	Date
Multi-agent cooperative control and estimation for flying cars and spacecraft swarms"	Invited Seminar	University of California, Santa Barbara	3/8/2019
Small Satellites	Caltech Space Innovation Council	Caltech	11/15/2018
Stronger Together-Coordination Among Spacecraft for Novel Exploration Strategies	Caltech KISS Workshop Short Course	Caltech Keck Institute of Space Studies	10/29/2018
Multi-agent cooperative control and estimation for flying cars and spacecraft swarms	Joint CSC@USC/ CommNetS-MHI Seminar Series	University of Southern California	9/17/2018
Multi-Agent Cooperative Control and Estimation for Flying Taxis and Spacecraft Swarms	(Invited Speaker) IFAC Networked & Autonomous Air & Space Systems Workshop	Santa Fe, NM	6/13/2018
Nonlinear stochastic incremental stability for aerospace robotics applications	Symposium on Dynamical Systems and Related Fields	University of Waterloo, Canada	5/17/2018
CAST Autonomous Flying Ambulance	JPL and Caltech Seminar Series (Lab-wide Seminar)	JPL	1/18/2018
Building in Space: In-Orbit Additive Construction Using Modular Swarms of Spacecraft	SpaceTech Expo (invited speaker)	Pasadena, CA	5/23/2017
Optimality and Nonlinear Stability for Aerospace Robotics	Southern California Robotics Symposium (invited speaker)	USC	4/14/2017
Creating a Giant Reconfigurable Space Systems Using Thousands of Spacecraft: Guidance & Control Perspectives	Breakwell Lectureship	Dept. of Aero/Astro, Stanford University	1/20/2017
Fusing Nonlinear Control Theory with Real-time Optimization: Creating Complex Reconfigurable Robotic Systems using Millions of Microbots	Robotics Section Seminar	JPL Robotics Section	10/5/2016

Title	Conference	Location	Date
Creating Giant Reconfigurable Space Systems Using Thousands of Spacecraft: Guidance & Control Perspectives	Invited Departmental Seminar	MAE Dept, UCLA	5/10/2016
Creating Giant Reconfigurable Space Systems Using Thousands of Spacecraft: Guidance & Control Perspectives	GALCIT Colloquium	Caltech	11/13/2015
Development and Flight Control of Robotic Bats and Birds with Articulated Wings.	Invited Speaker, IEEE ICRA Workshop, Robotics-Inspired Biology and Bio-Inspired Robotics	IEEE International Conference on Robotics and Automation (ICRA)	5/26/2015
Revolutionary Aerial Drones: Control and Estimation Challenges of Developing Robotic Falcons to Prevent Airport Bird Strikes	Invited GRASP Lab Seminar (Host: Prof. Vijay Kumar)	GRASP Lab, University of Pennsylvania	2/13/2015
Mathematical Modelling and Nonlinear Stability Analysis of Central Pattern Generators for Locomotion and Flight	4th Annual Winter Workshop on the Neuromechanics and Dynamics of Locomotion	Tulane University	1/28/2015-1/29/2015
Guidance and Control of Swarms of Femtosatellites for Synthetic Aperture Applications	NPS/NRO Sparse Aperture Systems Technical Exchange Meeting	Naval Postgraduate School	11/4/2014-11/5/2014
Revolutionary Aerial Drones: Control and Estimation Challenges of Developing Robotic Falcons to Prevent Airport Bird Strikes	Departmental Colloquium	MAE Dept., Cornell University	9/2/2014
Revolutionary Aerial Drones: Control and Estimation Challenges of Developing Robotic Falcons to Prevent Airport Bird Strikes	Plenary Speaker: Symposium on Unmanned Vehicles	Ulsan National Institute of Science and Technology (UNIST)	8/27/2014

Title	Conference	Location	Date
Vision-Based Navigation and Motion Planning of High-Speed Flight through Dense Forests	Invited JPL Computer Vision and Robotics Group Seminar (Host: Dr. Larry Matthies)	Jet Propulsion Laboratory, Caltech	8/5/2014
Vision-Based Navigation, Motion Planning, and PDE Control of Wing Flexibility for High-Speed Flight	Invited JPL Control and Analysis Group Seminar	Jet Propulsion Laboratory, Caltech	7/31/2014
Nonlinear Control and Estimation Challenges of Developing Robotic Falcons to Prevent Airport Bird Strikes	Invited Seminar (Host: Marco Pavone)	Dept. Aero/Astro., Stanford University	4/24/2014
Revolutionary Aerial Drones: Development of Robotic Falcons to Prevent Airport Bird Strikes	Spring 2014 DCL Seminar Series (Host: Prof. Magnus Egerstedt)	Decision and Control Laboratory, Georgia Institute of Technology	3/28/2014
Nonlinear Control and Estimation Challenges of Developing Robotic Falcons to Prevent Airport Bird Strikes	Invited Seminar	Department of Mechanical and Aerospace Engineering, Seoul National University	11/8/2013
Revolutionary Aerial Drones: Development of Robotic Falcons to Prevent Airport Bird Strikes	Share the Vision 2013 (among 35 invited faculty speakers)	University of Illinois at Urbana-Champaign (Hosted by the Office of Technology Management)	10/10/2013
Control and Estimation Challenges of Developing Robotic Falcons to Prevent Airport Bird Strikes	Invited Seminar (Host: Prof. Behcet Acikmese)	Aerospace Engineering Department, University of Texas, Austin	9/6/2013
Control and Estimation Challenges of Developing Robotic Falcons to Prevent Airport Bird Strikes	Invited Departmental Seminar (Host: Prof. John Valasek)	Aerospace Engineering Department, Texas A&M University	9/5/2013
Control Challenges of Realizing a Soft-Winged Aerial Robot that Can Fly like a Bat	Fall 2013 LCSR & CISST Seminars (Host: Profs. Noah Cowan, Marin Kobilarov)	Laboratory for Computational Sensing and Robotics/Engineering Research Center, Johns Hopkins University	11/2/2012
Control Challenges of Realizing a Soft-Winged Aerial Robot that Can Fly like a Bat	Invited Seminar hosted by Dr. Samuel Stanton (ARO)	Army Research Laboratory (ARL)	11/1/2012

Title	Conference	Location	Date
Controlling Swarms of Spacecraft Inspired by Biological Oscillators	A workshop on the future of aerospace controls and decision (hosted by Prof. Eric Feron)	School of Aerospace Engineering, Georgia Tech	6/12/2012
Control Challenges of Realizing a Soft-Winged Aerial Robot that Can Fly like a Bat	Aerospace Guidance and Control Systems Committee (AGCSC)	109th AGCSC Meeting at Salt Lake City, Utah	3/9/2012
Control Challenges of Realizing a Soft-Winged Aerial Robot that Can Fly like a Bat	Decision and Control Lecture Series	Coordinated Science Laboratory, University of Illinois at Urbana-Champaign	1/25/2012
Bio-inspired Flight Mechanics, Flight Controls, Vision-based Navigation and SWARM Spacecraft	AIAA General Meeting	UIUC AIAA Student Branch	12/7/2011
Vision based navigation by using monocular vision (invited speaker)	UAS Video Tracking Workshop and Challenge	Texas A&M University	10/25/2011
Reduction of complex systems by synchronization: application to flapping flight and formation flying	Illinois/Purdue Dynamics Research Meeting (Host: H. Dankowicz)	Department of Mechanical Science and Engineering, University of Illinois at Urbana-Champaign	2/26/2011
Synchronization: Formation Flying iPhones to Engineered Flapping Flight	Invited Departmental Seminar	School of Aeronautics and Astronautics, Purdue University	12/9/2010
Neurobiologically Inspired Control of Engineered Flapping Flight (Invited Speaker)	AFOSR/ONR Joint Workshop on Bio-Inspired Robotics	AFOSR/ONR	5/21/2010
Synchronization: From Formation Flying iPhones to Engineered Flapping Flight	Invited Departmental Seminar	Department of Mechanical and Industrial Engineering, University of Iowa	4/15/2010
New Opportunities for Complex Spacecraft Systems: Biology, Neuroscience, and Computer Vision	Guidance & Control Group, Seminar Series	NASA/Caltech Jet Propulsion Laboratory	11/12/2009

Title	Conference	Location	Date
New Opportunities for Complex Aerospace Systems: Biology, Neuroscience, and Computer Vision for Control and Navigation of Aerospace Vehicles	Invited Seminar	Air Force Research Laboratory, Wright Patterson Air Force Base	6/16/2009
New Opportunities for Complex Aerospace Systems: Biology, Neuroscience, and Computer Vision for Control and Navigation of Aerospace Vehicles	Invited Departmental Seminar	Department of Aerospace Engineering, University of Illinois at Urbana-Champaign	5/11/2009
Synchronization of Multiple Dynamical Systems: What Fireflies Have in Common with Formation Flying Spacecraft?	Invited Departmental Seminar	School of Aerospace Engineering, Georgia Institute of Technology	11/1/2006
Synchronization of Multiple Dynamical Systems: What Fireflies Have in Common with Formation Flying Spacecraft?	Invited Departmental Seminar	Department of Aerospace Engineering, Iowa State University	8/7/2006
Synchronization of Multiple Dynamical Systems: What Fireflies Have in Common with Formation Flying Spacecraft?	Material and Mechanical Science Group Presentation Series	Schlumberger Research Center, Cambridge, MA	5/16/2006
Synchronization Control of Multiple Dynamical Systems	Invited Departmental Seminar	Mechanical Materials, and Aerospace Engineering Department Illinois Institute of Technology	3/22/2006
SPHERES Tethered Formation Flight Testbed: Application to NASA's SPECS Mission	Invited Departmental Seminar	MAE Dept., Seoul National University	1/2005

8. Research Areas and Grants, Contracts, and Gifts

a. Areas of Research

Aerial robotics, distributed spacecraft systems, space autonomous systems, and aerospace robotics, and in particular, on the theory and application of control, estimation, learning-based control and planning, and navigation of autonomous space and air vehicles.

b. Research Grants

Brief Title or Description	Source of Funds	Years	Role (# of PIs)
Bio-Inspired Integrated Sensing and Control of Flapping Flight for Micro Aerial Vehicles	AFOSR	2/15/2009-11/30/2011	PI (1)
Bio-Inspired Flexible Cellular Actuating Systems	ARO	8/1/2010-7/31/2013	PI (2)
Testbed Demonstration of Swarms of Femtosats (one of the only two DRDF projects that do not have CALTECH co-PIs that year).	JPL DRDF	6/13/2011-3/25/2012	PI (1)
Vision-Based Navigation in Riverine Environments	ONR	1/1/2011-11/30/2013	PI (2)
Dynamics and Controls of Swarms of Femtosatellites	NASA NSTRF	8/11/2011-8/10/2015	PI (1)
Vision Containment for Robotic Mowing	John Deere (JDTIC)	1/1/2012-12/31/2014	Co-PI (2)
UAS Vision-Tracking Challenge	Rockwell Collins	3/2012-5/2014	PI (1)
Minimal Representation and Decision Making for Networked Autonomous Agents	AFOSR	5/1/2012-4/30/2015	Co-PI (5)
CAREER: Control and Sensing Strategies for Robotic Falcons to Prevent Airport Bird Strikes	NSF	2/15/2013-1/31/2018	PI (1)
System Engineering Study of CubeSat Formation Flying	JPL	8/26/2013-8/31/2014	PI (1)
Revolutionary Aerial Drones: Control and Motion Planning Algorithms for Robotic Falcons to Prevent Airport Bird Strikes (Center for Advanced Study Beckman Fellowship)	UIUC CAS	8/2014-5/2015	PI (1)
Vision-Centric Multi-Sensor Fusion for Navigation in Riverine Environments	ONR	4/1/2014-3/31/2017	PI (2)
NRI/Collaborative Research: Improving the Safety and Agility of Robotic Flight with Bat-Inspired Flexible-Winged Robots	NSF	8/1/2014-7/31/2017	Co-PI (6)
Novel Methodology for Control and Stabilization of Spacecraft with Captured Asteroid (Phase 1)	NASA CIF	11/1/2014-8/31/2015	PI (1)
Strain Actuated Solar Array for SC Attitude & Instrument Jitter Control (Phase 1)	JPL	11/1/2014-10/31/2015	Co-PI (2)
In-Orbit Additive Construction Using Modular Swarms of Spacecraft	NASA NSTRF	8/1/2015-7/31/2019	PI (1)
Fast Optimal Motion Planning with High Fidelity Dynamics	JPL	10/1/2015-9/30/2016	PI (1)
Strain Actuated Solar Array for SC Attitude & Instrument Jitter Control (Phase 2)	JPL	11/1/2015-10/31/2016	Co-PI (2)

Brief Title or Description	Source of Funds	Years	Role (# of PIs)
Novel Methodology for Control and Stabilization of Spacecraft with Captured Asteroid (Phase 2)	NASA CIF	10/1/2015-9/30/2016	PI (1)
Cooling, Annealing, and Pointing Satellite (CAPSAT)	NASA USIP	2016-2017	Co-I
Fast Optimal Motion Planning with High Fidelity Dynamics (Phase 2)	JPL	10/1/2016-9/30/2017	PI (1)
Mathematical Framework of Controlling Heterogeneous Groups of Autonomous Vehicles	KAIST	2017-2018	PI (1)
System Level Autonomy to Enable Autonomous Mapping Missions of Small Solar System Bodies	JPL 3x Strategic R&TD	2017-2019	PI (1)
Distributed Swarm Antenna Arrays for Deep Space Applications	Keck Institute for Space Studies (KISS)	2017-2018	PI (1)
Guidance of Swarms Deployed from the Back Shell of the Mars Spacecraft for Distributed Science	NASA Center Innovation Fund	2017-2019	PI (1)
Autonomous Approach of Small Unknown Bodies	JPL Topical R&TD	2017-2019	PI (1)
Advanced Assured Positioning, Navigation & Timing Technology	Boeing	2017-2019	PI (1)
CAST: Precision Navigation	AeroVironment	2017-2019	PI (1)
Physics-Driven Swarm Autonomy for On-Demand and Transforming Shapes and Functions	JPL	2017-2018	3 PIs
Cooperative Navigation and Swarm Mapping for Spacecraft Swarms	Stanback Space Innovation Fund	2018-2019	PI (1)
Autonomous Drone-based Observation and Sampling of Volcanic Gases	Terrestrial Hazard Observation and Reporting (THOR) Center	2018-2019	4 PIs
Large Constellations and Formations for Exploring Interstellar Objects and Long-Period Comets	Keck Institute for Space Studies (KISS)	2018	Co-Lead (3)
Autonomous Drone-Based Geobiological Imaging and Mapping	Agouron Institute	2018-2020	Co-PI
Learning-Based Robust Flight Control	Raytheon	2018-2020	Co-PI
Swarm Autonomy	Raytheon	2018-2020	Co-PI
Caltech Autonomous Flying Ambulance	CAST	2017-2018	2 PIs
Autonomous Drone-based Sampling of Volcanic Gas	JPL-Caltech PDF	2018-2020	Caltech PI

Brief Title or Description	Source of Funds	Years	Role (# of PIs)
Enabling precision flyby and close-up imaging with UAVs	JPL-Caltech PDF	2018-2019	Caltech Co-PI
DARPA PAI: Physics-Infused Learning for Autonomous Dynamic Robots	DARPA	2018-2020	Co-PI
Innovative Hands-on Education on CubeSat Attitude Control for Ae105	Stanback Space Innovation Fund	2019-2020	PI (1)
CAST-JPL Swarm Autonomy	JPL	2019	Co-PI (2 PIs)
A Robust Framework for Object Detection in Challenging Environments	Ford Motor Company	2019-2021	PI (1)
AeroVironment Control-Theoretic Design	AeroVironment	2019-2020	PI (1)
Visual Relative Navigation via Intelligent Ephemeral Relationships Phase I	DARPA	2019	Caltech PI
CAST-JPL Swarm Autonomy	JPL	2020	Co-PI
JPL Strategic RTD Distributed Aperture Radar Tomographic Sensors (DARTS) Trade Study and Technology Demonstration	JPL	2020-2020	Caltech PI
Distributed Aperture Radar Tomographic Sensors (DARTS)	NASA (JPL is PI)	2020-2023	Caltech PI
Autonomous Flying Ambulance	CAST G. Clinard Fund	2019-2020	PI
Leonardo	CAST G. Clinard Fund	2019-2020	PI
Advanced Assured Positioning, Navigation & Timing Technology	Boeing	2019-2020	PI (1)
Deep Space Autonomous Servicing	NASA	2019-2020	Caltech PI
Visual Relative Navigation via Intelligent Ephemeral Relationships Phase II	DARPA	2020-2023	Caltech PI
Science-Infused Multi-Spacecraft Autonomy for Interstellar Object Exploration	JPL	2020-2022	Caltech PI
Pre-CASTOR	JPL	2020-2021	Caltech PI
Development of an Autonomous Recovery Function for eVTOL Aircraft using an Adaptive/ML Controller	Air Force STTR	2020-2021	PI
Autonomous Drone-based Sample Return of Volcanic Gas	Caltech CAST	2020-2021	Co-PI
Habitat Orientable & Modular Electrodynamic Shield (HOMES)	NASA	2021	PI
Trusted AI and Reliable Autonomy for Spacecraft Swarms: Motion Planning and Perception	The Aerospace Corporation	2021-2023	PI

Brief Title or Description	Source of Funds	Years	Role (# of PIs)
Democratizing Spacecraft-based Global Positioning System using Mega-Constellations	Stanback Innovation Fund	2021-2022	PI
Advanced Assured Positioning, Navigation & Timing Technology	Boeing	2021-2022	PI
Autonomy for Characterization of Hydrodynamic Environments from Infrared (IR) Imagery	ONR	2021-2023	PI
Fault Tolerant Distributed Networks	JPL	2021-2023	PI
AI-based Safety-Assured Autonomy (AI-SAA)	Supernal	2022-2025	PI
Development of an Adaptive/MI Electronic Parachute Recovery Function in a Run-Time-Assurance Architecture	Air Force (Jump Aero)	2022-2023	PI
Multi-sensor Deep Fusion for Adverse Weather Conditions	Ford	2022-2023	PI
Safe Autonomous Flight for Characterization of Hydrodynamic Environments from Infrared (IR) Imagery	ONR	2023-2026	PI
Learning Introspective Control	DARPA	2022-2023	DARPA

c. Instruction Grants

Years	Brief Title or Description	Source of Funds	Role
2014	Composite Aviation Project (U of I AE Student Aircraft Builders)	UIUC Student Sustainability Committee (SSC)	PI (1)
2011	NASA ESMD Senior Design Project Funding (for the NASA Lunarobotics Team)	NASA	2

9. Service

a. Departmental or Institute Service at Caltech and JPL

1. JPL Autonomy Grand Challenges A-Team Study, October 23, 2018.
2. NASA Science Mission Directorate (SMD) Autonomy Workshop (Invited Participant), October 10-11, 2018.
3. **Autonomous Formation Flying Co-Lead**, Coordinated Constellation for Earth Observations Planning, JPL Earth Science Directorate 2017- present
4. Scientific Advisory Board Member, Caltech Center for Autonomous Systems and Technologies (CAST), 2017-present
5. Faculty Search Committee, 2017-2019
6. Ae208 GALCIT Colloquium Organizer, 2017-2018

b. Federal and State

1. Invited Panelist, NSF Workshop on Future Directions for Controls, 11/2/2011

2. NSF Proposal Review Panelist, NSF CMMI, 1/19-1/20, 2011
3. NSF Proposal Review Panelist, NSF CMMI division, April 21-22, 2009
4. Served as a review panelist for NSF's Cyber-Enabled Discovery and Innovation (CDI) Type II proposals in the area of bio-inspired engineering, February 14-15, 2008
5. Proposal Reviewer for Army Research Office (ARO)
6. Proposal Reviewer for Air Force Office of Scientific Research (AFOSR)

c. Reviewer for Journals and Conferences

SPIE Optical Engineering; AIAA Journal of Guidance, Control and Dynamics (Selected Excellent Reviewer 2006, 2010); IEEE Transactions on Automatic Control; Automatica; IEEE Transactions on Robotics; The International Journal of Robotics Research; IEEE Transactions on Control of Network Systems; Bioinspiration & Biomimetics; IEEE Transactions on Control System Technology; Journal of Field Robotics; IEEE Systems Journal; System & Control Letters; International Journal of Robust and Nonlinear Control; Journal of the Royal Society Interface; IEEE Transactions on Aerospace and Electronic Systems; The Journal of the Astronautical Sciences; Journal of Spacecraft and Rockets; IEEE Transactions on Circuits and Systems I; IET Control Theory & Applications; Astrophysics and Space Science An International Journal of Astronomy; Astrophysics and Space Science; International Journal of Adaptive Control and Signal Processing; IEEE/ASME Transactions on Mechatronics; International Journal of Control; International Journal of Control, Automation, and Systems; International Journal of Aerospace Engineering; AIAA Guidance, Navigation, and Control (GNC) Conference and Exhibit; IEEE International Conference on Intelligent Robots and Systems (IROS); Robotics: Science and Systems (RSS); IEEE International Conference on Robotics and Automation (ICRA); American Control Conference (ACC); IEEE Conference on Decision and Control (CDC); AIAA Infotech@Aerospace and Unmanned Unlimited Conference; IEEE Multi-Conference on Systems and Control (MSC); IEEE International Conference on Electro/Information Technology (EIT)

d. Departmental Service at UIUC

1. AE Department Seminar Series (AE590) Chair, Spring 2016
2. AE Stilwell Lectureship Selection Committee (Chair), Fall 2015- Spring 2016
3. AE Undergraduate Curriculum Committee, Spring 2014 and Fall 2014
4. 2 Faculty Search Committees (Space Systems, Autonomous Systems), 2013
5. AE Doctoral Qualifying Exam Chair (ACDS Field), January 2012, June 2012, January 2016
6. Chair, Monthly Departmental Faculty Meetings, September 2011-May 2012
7. 2 Faculty Search Committees, (CFD, Space Systems), Aerospace Engineering, 2011-2012
8. 3 Faculty Search Committees, (Combustion/Propulsion, Mechanics/Structures, Systems Engineering Lecturer), Aerospace Engineering, 2010-2011
9. Undergraduate Curriculum Committee, Aerospace Engineering, 2011-2012, 2013-2013
10. Systems Engineering Committee, Aerospace Engineering, 2009-Spring 2011
11. Computer Committee 2009-2011, 2009-2011
12. Iowa State University: Equipment Planning & Safety Committee Discipline Committee, Guidance, Navigation, and Control Discipline Committee, Design/Systems Perspective

e. College Service at UIUC

1. College of Engineering Safety Advisory Committee (UIUC)
2. Engineering Library Committee (UIUC)
3. Engineering Open House Committee (UIUC)

4. New curriculum evaluation subcommittee for one course proposal, College of Engineering, Spring 2011 (UIUC)

10. Graduate Thesis Research Advising

a. Ph.D. Thesis Students (graduated 17 PhDs). Currently, supervising 9 Caltech PhD students

Student Name	Year Graduated	Ph.D. Thesis Title	Placement
Aditya Paranjape (UIUC)	12/2011	Dynamics and Control of Robotic Aircraft with Articulated Wings	Assistant Professor (Lecturer), Imperial College London (Previously, Assistant Professor, McGill Univ.)
Daniel Morgan (UIUC)	5/2015	Guidance and Control of Swarms of Spacecraft	Senior GNC Engineer, SpaceX
Junho Yang (UIUC)	12/2015 (co-advised with S. Hutchinson)	Vision based Estimation, Localization, and Mapping for Autonomous Vehicles	Senior Engineer, Hyundai Motor Company
Michael Dorothy (UIUC)	12/2015	Neuroinspired Control Strategies with Applications to Flapping Flight	Aerospace (control) engineer at Army Research Lab
Saptarshi Bandyopadhyay (UIUC)	5/2016	Novel Probabilistic and Distributed Algorithms for Guidance, Control, and Nonlinear Estimation of Large-Scale Multi-Agent Systems	Robotics Technologist at JPL
Kevin Meier (UIUC)	1/2018 (PhD final exam) co-advised with S. Hutchinson	Vision based agile motion planning of an aerial vehicle	Army Research Lab
Michael Duffy (UIUC)	8/2019 co-advised with L. Bergman	Efficient Solution of the Fokker-Planck Equation via Smooth Particle Hydrodynamics for Nonlinear Estimation	Raytheon Missiles & Defense
Rebecca Foust (UIUC)	8/2019	Optimal Guidance and Control of Heterogeneous Swarms for In-Orbit Self-Assembly of Large Space Structures: Algorithms and Experiments	JHU Applied Physics Laboratory
Xichen Shi (Caltech Ae)	2016-2021	Intelligent Control for Fixed-Wing eVTOL Aircraft	Waymo
Yashwanth Kumar Nakka (Caltech Ae)	2016-2021	Spacecraft Motion Planning and Control under Probabilistic Uncertainty for Coordinated Inspection and Safe Learning	JPL

Student Name	Year Graduated	Ph.D. Thesis Title	Placement
Karena Cai (Caltech CDS)	2016-2021 (co-advised with R.M. Murray)	Safe and Interpretable Autonomous Systems Design: Behavioral Contracts and Semantic-Based Perception	Cruise
Guanya Shi (Caltech CDS)	2018- 2022 (co-advised with Y. Yue)	Reliable Learning and Control in Dynamic Environments: Towards Unified Theory and Learned Robotic Agility	Assistant Professor, CMU Robotics Institute
Ellande Tang (Caltech MCE)	2018- 2022	Studies on Off-Nominal Rotor Aerodynamics for eVTOL Aircraft	Applied Physics Lab
SooJean Han (Caltech CDS)	2018- Jan 2023 (co-advised with J. Doyle)	Control and State-Estimation of Jump Stochastic Systems by Learning Recurrent Spatiotemporal Patterns	Assistant Professor, KAIST
Kai Matsuka (Caltech Ae)	2017-May 2023	International Conference on Intelligent Robots and Systems	Tesla
Michael O'Connell (Caltech Ae)	2017-May 2023	Contraction Theory for Robust Learning-based Control: Toward Aerospace and Robotic Autonomy	Northrop Grumman
Hiroyasu Tsukamoto (Caltech Ae)	2017- May 2023	Contraction Theory for Robust Learning-based Control: Toward Aerospace and Robotic Autonomy	Assistant Professor, University of Illinois at Urbana-Champaign
Benjamin P. Riviere (Caltech Ae)	2018-present		
Connor Lee (Caltech Ae)	2019-present		
E. Sorina Lupu (Caltech Ae)	2019-present		
Nikhil Ranganathan (Caltech Ae)	2020-present		
James F. Ragan (Caltech Ae)	2020-present		
John Lathrop (Caltech CDS)	2022-present		
Fengze Xie (CMS)	2022-present		
Joshua Ibrahim (CDS)	2023-present		
Yujin An (BE)	2023-present		

b. M.S. Thesis Students (graduated 11 MS thesis students at UIUC and 3 MS visiting students)

Student Name	Year Graduated	Thesis Title	Placement
Daniel Morgan	8/2011	Swarm Keeping Strategies for Spacecraft under J2 and Atmospheric Drag Perturbations	Continuing as PhD Student at UIUC
P. Daniel Kuang	12/2011	Robobat: Dynamics and Control of Flapping Flight Micro Aerial Vehicles	Control Engineer, Cummins, Inc.
Jinyu Guan	5/2012	Design and Control Strategy of a Flexible, Hyper-Redundant Robotic Arm Using Electroactive Dielectric Polymers	GNC Systems Engineer, Lockheed Martin
Dushyant Rao, co-advised with S. Hutchinson	8/2012	CurveSLAM: Utilizing Higher Level Structure in Stereo Vision-based Navigation	PhD Student, University of Sydney. Postdoc at University of Oxford
Nitish Sanghi (ME)	5/2013	Design of Flexible Actuators using Electro-Active Polymers and CPG-based Control Strategies	Mechanical Engineer, Intuitive Surgical Inc. (da Vinci Robots)
Giri Prashant Subramanian	8/2015	Nonlinear Control Strategies for Quadrotors and CubeSats	MS student in Computer Science, UIUC
Yashwanth Kumar Nakka (co-advised with J. Allison)	8/2016	Nonlinear Attitude Control of Spacecraft with Strain-Actuated Solar Arrays	PhD student at Caltech
Mingyo Seo (ME), co-advised with S. Hutchinson	8/2016	Application of a Model-Based Nonlinear Attitude Control for Quadtoror UAVs	Korea Institute of Science and Technology (KIST)
Lingyu Ma, co-advised with S, Hutchinson	12/2016	Monocular Vision Based Navigation Using Image Moments of Polygonal Features	Computer Vision Engineer at Caterpillar
Ayush Saxena	12/2017	Dynamic modeling of a robotic spacecraft for NASA's asteroid redirect robotic mission	Tesla
Martin Miller (ECE), co-advised with S. Hutchinson	12/2017	Hardware and Software Considerations for Monocular SLAM in A Riverine Environment	Ford Autonomous Vehicle Group
Francesca Baldini	7/2016	Visiting MS student under my supervision, the University of Pisa, Italy	PhD student at Caltech
Giusy Falcone	7/2016	Visiting MS student under my supervision, the University of Pisa, Italy	PhD student at UIUC
Elena Sorina Lupu	4/2018	Visiting MS student under my supervision, EPFL, Switzerland	Research Staff at Caltech

c. Post-doctoral Associates (18 postdocs, including 6 current postdocs at Caltech)

Name	Title (percent time)	Permanent Employer	Years
Dr. Keehong Seo	Postdoctoral Associate (100%)	Research Staff Member at Samsung Advanced Institute of Technology	2008-2009
Dr. Animesh Chakravarthy	Postdoctoral Research Scientist at U of Florida/REEF with Subcontract from UIUC (50%)	**Associate Professor** in Aerospace Engineering, University of Texas at Arlington	2009-2010
Dr. Ashwin Dani	Postdoctoral Associate (100%) co-advised with S. Hutchinson	**Associate Professor** of Electrical and Computer Engineering, University of Connecticut	8/2011-8/2013
Dr. Aditya Paranjape	Postdoctoral associate (100%)	**Assistant Professor (Lecturer)** of Aeronautical Engineering, Imperial College London (Previously, Assistant Professor, McGill Univ.)	1/2012-11/2013
Dr. Jingjin Yu	Postdoctoral Associate (100%) co-advised with P. Voulgaris	**Assistant Professor**, Department of Computer Science, Rutgers University	3/2013-8/2013
Dr. Alireza Ramezani	Postdoctoral Associate (100%) co-advised with S. Hutchinson	**Assistant Professor** of ECE, Northeastern University	(11/2014-8/2017)
Dr. Christian Miguel Chilan	Postdoctoral Associate (100%)	Research Assistant Professor, University of Illinois at Urbana-Champaign	3/2015-7/2016
Dr. Saptarshi Bandyopadhyay	Postdoctoral Associate (100%)	Robotics Technologist at **JPL**	1/2016-6/2016
Dr. Ryan Shahrouz Alimo	Postdoctoral Associate (100%) at Caltech	AI Researcher at **JPL**	9/2017-12/2017
Dr. Alireza Ramezani	Postdoctoral Associate (100%) at Caltech	**Assistant Professor** of ECE, Northeastern University	8/2017-8/2018
Dr. Kyunam Kim	Postdoctoral Associate (100%) at Caltech	Hyundai Motors, Urban Air Mobility	2017-present
Dr. Salar Rahili	Postdoctoral Associate (100%) at Caltech	Machine learning Engineer at Bay Area Startup	2017-7/2018
Dr. Vincenzo Capuano	Postdoctoral Associate (100%) at Caltech	Currently with Samsung Electronics	2018-present
Sorina Lupu	Research Engineer	Enrolled as PhD student at Caltech	
Thayjes Srivas	Research Engineer	Robotics Software Engineer at OffWorld	1/2018-12/2018
Alexei Harvard	Research Engineer		2018-present
Dr. Anthony Fragoso	Research Scientist	ERDC-CRREL	12/2018-present

Name	Title (percent time)	Permanent Employer	Years
Dr. Matt Anderson	Postdoctoral Associate and Research Scientist (since Oct 2021)		10/2019-present
Dr. Wolfgang Hoenig	Postdoctoral Associate	Assistant Professor, TU Berlin	3/2019-10/2020
Patrick Spieler	Research Engineer and Lead	Jet Propulsion Laboratory	2018-present
Dr. Serin Lee	Research Engineer	CEO, Alchera Lab, USA	10/2019-9/2020
Dr. Lu Gan	Postdoctoral Associate		January 2022-present Assistant Professor, Georgia Institute of Technology
Dr. James Preiss	Postdoctoral Associate		July 2022-

d. Final PhD Exams and Undergraduate Advising

Final PhD Exams: 2 PhD students at Iowa State, 12 PhD students at UIUC, and 7 PhD students at Caltech. 20 Caltech PhD Students for PhD Candidacy Exams

Academic Advising: ~ 10 students per year at UIUC and ~12 undergraduates per year at Caltech

Caltech Summer Undergraduate Research Fellowship (SURF): 8 Caltech students in 2017 and 13 Caltech students in 2018.

Student Organizations/Design Teams

1. Faculty advisor (AIAA student chapter) since 2019
2. Caltech Drone Club (Faculty Advisor) since 2018.
3. Faculty advisor: NASA Lunar Robotics Competition: Illini Robotics in Space (IRIS) 2009-2015. Roughly 20 students in AE.
4. Faculty advisor: UAS Vision Tracking Challenge 2011-2014 (with S. Hutchinson). Roughly 20 students in AE and ECE
5. Faculty Advisor: Student Aircraft Builders 2013-Present. Roughly 25 students in AE and ME.
6. Faculty advisor: Float'n Illini: University of Illinois NASA Microgravity Team (2010-2011)
7. Faculty advisor: Iowa State University Team for the Mars Society University Rover Challenge (Iowa State) 2008, 2009

CERTIFICATE OF SERVICE

I hereby certify that, on October 27, 2023, I caused a true copy of this document, including its exhibit, to be served on all counsel of record by email, as authorized by Local Rule CV-5(d).

/s/ David E. Cole
David E. Cole