UNITED STATES PATENT AND TRADEMARK OFFICE

BEFORE THE PATENT TRIAL AND APPEAL BOARD

DJI EUROPE B.V.

v.

TEXTRON INNOVATIONS INC.

Patent Owner.

U.S. Patent No. 10,275,950

DECLARATION OF DR. CHARLES REINHOLTZ IN SUPPORT OF PETITION FOR *INTER PARTES* REVIEW OF U.S. PATENT 10,275,950

Mail Stop PATENT BOARD
Patent Trial and Appeal Board
U.S. Patent & Trademark Office
P.O. Box 1450
Alexandria, VA 22313-1450

TABLE OF CONTENTS

I. QUALIFICATIONS 2

II. UNDERSTANDING OF RELEVANT LEGAL PRINCIPLES 6

III. ’950 PATENT 9

A. Overview 9

B. Level Of Ordinary Skill In The Art 12

C. Prosecution History 12

D. Claim Construction 18

IV. GROUND 1: THE COMBINATION OF WARNER AND SHAVIT RENDERS CLAIMS 1-3, 8-9, 11-13, 14 AND 16 OBVIOUS 19

A. Overview of the Combination 19

1. Overview of Warner 19

a. Warner 20

2. Wakutsu 30

3. Shavit 31

4. Motivation to Combine 38

a. Warner and Wakutsu 38

b. Warner, Wakutsu, and Shavit 42

B. Independent Claim 1 46

1. Preamble [1P] 48

2. “*Sensor*” [1A] 49

3. “*Avionics System*” [1B]/[1I] 50

4. “*Database*” [1C] 54

a. “Database” in the aircraft 55

b. “Database” external to the aircraft 58

5. “*Wireless transmitter*” [1D] 61

TABLE OF CONTENTS
(continued)

Page

6. "*Transceiver*" [1E]. 65

a. "Transceiver" 66

b. "Transceiver comprising an input device" [1E.1], "Pilot identification information is entered directly" [1J] 68

c. "Transceiver having a transceiver identity" [1E.3] 69

d. "Transceiver being configured for …" [1E.3], [1F], [1G] 73

7. "*Only Accessible*" [1H]. 76

C. Independent Claim 9 78

1. Preamble [9P] 79

2. "*Wireless Transmitter*" Limitations [9A.1]-[9A.3] 80

3. "*Database*" Limitations [9B.1]-[9B.2] 82

4. "*Transceiver*" Limitations 83

5. "*Only Accessible*" [9D] 84

6. Data Flow Limitation 85

D. Independent Claim 13 86

1. Preamble [13P] 87

2. "*Providing an avionics system*" [13A], "*Sensing*" [13B] and "*providing a wireless transmitter*" [13C] 87

3. "Transmitting the sensed flight performance data to a transceiver …" [13D] 90

4. "Entering the pilot identification information directly on the transceiver" [13E] 91

5. "Associating, by the transceiver, the sensed flight performance data …" [13F] 91

6. "Transmitting, by the transceiver, the received sensed flight performance data …" [13G] 92

TABLE OF CONTENTS
(continued)

Page

7. "Allowing access to the received sensed flight performance data …" [13H] 92

E. Dependent Claims 92

1. Claims 2, 3, and 12 92

2. Claims 4 and 5 94

3. Claims 7, 10, and 16 95

4. Claim 8 96

5. Claim 11 97

6. Claim 14 98

V. GROUND 2: THE COMBINATION OF WARNER, WAKUTSU, SHAVIT, AND GREUBEL RENDERS CLAIMS 1-5, 7-14, AND 16 OBVIOUS. 99

A. Overview of the Combination 100

1. Greubel 100

2. Motivation to Combine 104

B. Independent Claims 108

C. Dependent Claims 109

VI. GROUND 3: THE COMBINATION OF UCZEKAJ AND JIANG RENDERS CLAIMS 1-5, 8-9, 11-14, AND 16 OBVIOUS 109

A. Overview of the Combination 109

1. Uczekaj 109

2. Jiang 117

3. Motivation to Combine 122

B. Independent Claim 1 126

1. Preamble [1P] 127

2. "*Sensor*" [1A] 128

TABLE OF CONTENTS
(continued)

Page

3. "*Avionics System*" [1B]/[1I] 129
4. "*Database*" [1C] 131
   a. "Database" in the aircraft 131
   b. "Database" external to the aircraft 135
5. "*Wireless Transmitter*" [1D] 131
6. "*Transceiver*" [1E]. 139
   a. "Transceiver" 140
   b. "Transceiver comprising an input device" [1E.1], "Pilot identification information is entered directly" [1J]. 140
   c. "Transceiver having a transceiver identity" [1E.3] 142
   d. "Transceiver being configured for …" [1E.3], [1F], [1G] 143
7. "*Only Accessible*" [1H]. 145

C. Independent Claim 9 147
1. Preamble [9P] 149
2. "*Wireless Transmitter*" Limitations [9A.1]-[9A.3]. 150
3. "*Database*" Limitations [9B.1]-[9B.2] 152
4. "*Transceiver*" Limitations 153
5. "*Only Accessible*" [9D] 154
6. Data Flow Limitation 154

D. Independent Claim 13 155
1. Preamble [13P] 156
2. "*Providing an avionics system*" [13A], "*Sensing*" [13B] and "*providing a wireless transmitter*" [13C] 157
3. "Transmitting the sensed flight performance data to a transceiver …" [13D] 160

TABLE OF CONTENTS
(continued)

Page

4. "Entering the pilot identification information directly on the transceiver" [13E] 161
5. "Associating, by the transceiver, the sensed flight performance data …" [13F] 161
6. "Transmitting, by the transceiver, the received sensed flight performance data …" [13G] 161
7. "Allowing access to the received sensed flight performance data …" [13H] 162

E. Dependent Claims 162

1. Claims 2, 3, and 12 162
2. Claims 4 and 5 163
3. Claim 8 164
4. Claim 11 165
5. Claim 14 166
6. Claim 16 167

VII. GROUND 4: THE COMBINATION OF UCZEKAJ, JIANG AND GREUBEL RENDERS CLAIMS 1-5, 8-9, 11-14 AND 16 OBVIOUS 168

A. Motivation to Combine 169

B. Independent Claims 171

C. Dependent Claims 172

VIII. GROUND 5: THE COMBINATION OF WARNER, SHAVIT, AND UCZEKAJ DISCLOSES LIMITATIONS 4-5. 172

I, Dr. Reinholtz, declare as follow:

1. I have been engaged by Perkins Coie LLP on behalf of DJI Europe B.V. ("Petitioner"), to provide this Declaration concerning technical subject matter relevant to the petition for Inter Partes Review ("Petition") of U.S. Patent No. 10,275,950 to Girard ("the '950 patent").

2. I am over 18 years of age. I have personal knowledge of the facts stated in this Declaration and could testify competently to them if asked to do so. I have reviewed and am familiar with the specification and the claims of the '950 patent. In general, I will cite to the specification of a United States patent using the following formats: (Patent No., Col:Line Number(s)) or (Patent No., Paragraph Number(s)). For example, the citation ('950 patent, 1:1-10) points to the '950 patent specification at column 1, lines 1-10. Also, for convenience, I use italics to denote limitations from the challenged claims.

3. All of the opinions contained in this Declaration are based on the documents I reviewed and my knowledge and professional judgment. In forming the opinions expressed in this Declaration, I reviewed the documents listed in the attached Appendix. I have also reviewed and am familiar with any other document referred to in this Declaration.

4. I have been asked to provide my technical opinions regarding how a person of ordinary skill in the art would have understood the claims of the '950

patent at the time of the alleged invention, which I have been asked to assume is the 2013 timeframe. For purposes of whether the teachings of the prior art render the claims of the ’950 patent obvious, I have been asked to assume the date of July 26, 2013. I have also been asked to provide my technical opinions on how concepts in the ’950 patent specification relate to claim limitations of the ’950 patent. In reaching the opinions provided herein, I have considered the ’950 patent, its prosecution history, and the references cited above and have drawn as appropriate on my own education, training, research, knowledge, and personal and professional experience

I. Qualifications

5. In formulating my opinions, I have relied on my knowledge, training, and experience in the relevant field, which I will briefly summarize. A more detailed summary of my background, education, experience, and publications is set forth in my curriculum vitae (CV), which is submitted as DJI-1004. I have personal knowledge of the facts and opinions set forth in this declaration and believe them to be true. If called upon to do so, I would testify competently thereto. I have been warned that willful false statements and the like are punishable by fine or imprisonment, or both. I am being compensated for my time at my standard consulting rate. I am also being reimbursed for expenses that I incur during the course of this work. My compensation is not contingent upon the results of my

study and analysis, the substance of my opinions, or the outcome of any proceeding involving the Challenged Claims. I have no financial interest in the outcome of this matter or in any litigation involving the ’950 patent.

6. I am currently Emeritus Professor and Chair at Embry-Riddle Aeronautical University, Daytona Beach, Florida. I was a Professor in in the Department of Mechanical Engineering at Embry-Riddle from 2007 until my retirement from full time teaching in May, 2022. I also served as Chair of the department from 2007 through 2017. From 1983 to 2007, I was a faculty member in the Department of Mechanical Engineering at Virginia Polytechnic Institute and State University (Virginia Tech) in Blacksburg, Virginia, most recently serving as Alumni Distinguished Professor from 2002 to 2007. In my time at Virginia Tech, I also served as the Assistant Department Head, W.S. White Chair for Innovation in Engineering Education and ABET Review Chair, among other appointments. I earned a Bachelor of Science Degree (1976), a Master of Engineering Degree (1980), and a Ph.D. in Mechanical Engineering (1983) from the University of Florida. My Ph.D. research was in the field of optimization of spatial mechanisms.

7. I am a member of numerous professional societies and organizations. For example, I have been a Fellow in the American Society of Mechanical Engineers (ASME) since 2003. That organization has recognized my work on a number of occasions, including with the award of the ASME Outstanding Faculty

Advisor Award (1989-1990, 1991-92), the ASME National Faculty Advisor Award (1995), and the ASME Distinguished Service Award (2005). For forty years, I have conducted research and taught classes in the field of mechanisms, mechanical design, robotics, robotics, aeronautics, and unmanned vehicle systems. My research in the robotics and unmanned systems area began in 1998, and I have remained continuously active in teaching and research in these areas through the present. Examples of my research and teaching qualifications are summarized below:

- At Virginia Tech and Embry-Riddle Universities, I have taught a variety of courses, including Robotics, Advanced Robotics, Unmanned Systems, Mechanisms, Mechanical Design and Mechatronics and I have received several teaching awards such as the College of Engineering Certificate of Teaching Excellence (1987-88, 1997-98, 2001-02, 2006-07), Wine Award for Excellence in Teaching (1992), Virginia Tech Academy of Teaching Excellence (inducted 1992), Dean's Award for Excellence in Teaching (1998), Ingersoll-Rand Faculty Award for Outstanding Contributions to the Mechanical Engineering Department (2000), Outstanding Faculty Member Award (2003), and the Alumni Teaching Award (2004).
- I have also served as the advisor to many successful collegiate robotics teams, including the overall winning teams in the Association for

Unmanned Vehicle Systems (AUVSI) Intelligent Ground Vehicle Competition (2003 through 2007), the International Aerial Robotics Competition (2005, 2007), the Unmanned Aerial Systems Competition (2007), and the RoboBoat Competition (2014, 2015). In particular, I continuously advised teams competing in the International Aerial Robotics Competition and the Unmanned Aerial Systems Competition since 2004. These competitions involve a broad range of avionics systems, including a variety of sensors, flight logs, data recording devices and wireless communications systems. As with all systems flying in the National Air Space, we were required to understand and adhere to FAA regulations.

- I was also team lead for qualifying teams in the 2004 and 2005 DARPA Grand Challenge Competitions, and I was team lead and principal investigator of the third-place overall team in the 2007 DARPA Urban Challenge, a competition to develop a fully autonomous automobile capable of navigating a complex, dynamic urban course along with human-driven vehicles and other robotic cars.

- I hold two U.S. patents and have authored a popular textbook and have over 125 publications related to the design and analysis of mechanisms, kinematics, manipulators, robotics and unmanned vehicle systems. I have several best paper awards, such as the National Instruments Virtual

Instrumentation Applications Best Control Paper Award for "Developing a Fully Autonomous Vehicle for Virginia Tech's Entry in the DARPA Grand Challenge." I have received many awards, including the Presidential Young Investigator Award from the National Science Foundation (1987-1992) and the South-Pointing Chariot Award at the 1999 Applied Mechanisms and Robotics Conference, for lifetime contributions to the mechanisms community. I have co-founded three successful companies working in the area of robotics and unmanned vehicle systems.

II. Understanding of Relevant Legal Principles

8. I am not a lawyer, and I will not provide any legal opinions. Although I am not a lawyer, I have been advised certain legal standards are to be applied by technical experts in forming opinions regarding the meaning and validity of patent claims.

9. I understand that a patent claim is invalid if it is anticipated or obvious in view of the prior art, and that a claim can be unpatentable even if all of the requirements of the claim cannot be found in a single prior-art reference. I further understand that invalidity of a claim requires that the claim be anticipated or obvious from the perspective of a person of ordinary skill in the art at the time the invention was made.

10. I have been informed that a patent claim is invalid if it would have been obvious to a person of ordinary skill in the art. In analyzing the obviousness of a claim, I understand the following factors may be taken into account: (1) the scope and content of the prior art; (2) the differences between the prior art and the claims; (3) the level of ordinary skill in the art; and (4) any so called "secondary considerations" of non-obviousness, if they are present. I am not aware of any evidence of secondary considerations of non-obviousness relevant to the '950 patent. I reserve the right to supplement this Declaration if Patent Owner ("PO") introduces evidence of secondary considerations of non-obviousness.

11. I understand that to prove that prior art or a combination of prior art renders a patent obvious, it is necessary to:

(1) identify the particular references that, singly or in combination, make the patent obvious;

(2) specifically identify which elements of the patent claim appear in each of the asserted references; and

(3) explain why a person of ordinary skill in the art would have combined the references, and how they would have done so, to create the inventions claimed in the patent. I further understand that exemplary rationales that may support a conclusion of obviousness include:

- combining prior art elements according to known methods to yield predictable results;
- simple substitution of one known element for another to obtain predictable results;
- use of known technique(s) to improve similar devices (methods or products) in the same way;
- applying a known technique to a known device (method or product) ready for improvement to yield predictable results;
- "obvious to try" – choosing from a finite number of identified, predictable solutions with a reasonable expectation of success;
- known work in one field of endeavor may prompt variations of the work for use in either the same field or a different field based on design incentives or other market forces if the variations are predictable to a person of ordinary skill in the art; and
- some teaching, suggestion, or motivation in the prior art that would have led a person of ordinary skill in the art to modify the prior art reference or to combine prior art reference teachings to arrive at the claimed invention.

12. I have been informed that, in considering obviousness, hindsight reasoning derived from the patent-at-issue may not be used

III. ’950 Patent

A. Overview

13. The ’950 patent “relates generally to aircraft avionics systems.” (DJI-1001, 1:8-9.) The ’950 patent notes that “[c]onventional avionics systems can also be utilized to display and store flight performance information of the aircraft during flight.” (DJI-1001, 1:18-20.) This information “is useful for monitoring the aircraft performance, to assist with maintenance, and to provide feedback during pilot training.” (DJI-1001, 1:20-22.) The ’950 patent alleges that “many shortcomings remain” in these conventional systems. (DJI-1001, 1:23-25.) However, I note that the ’950 patent fails to identify any specific shortcomings.

14. Figure 3 “is a simplified schematic of the flight performance monitoring, analysis, and feedback system” of the ’950 patent. (DJI-1001, 1:41-43.) This system includes transmitter 303, transceiver 305, and database 307. (DJI-1001, 2:67-3:1.)

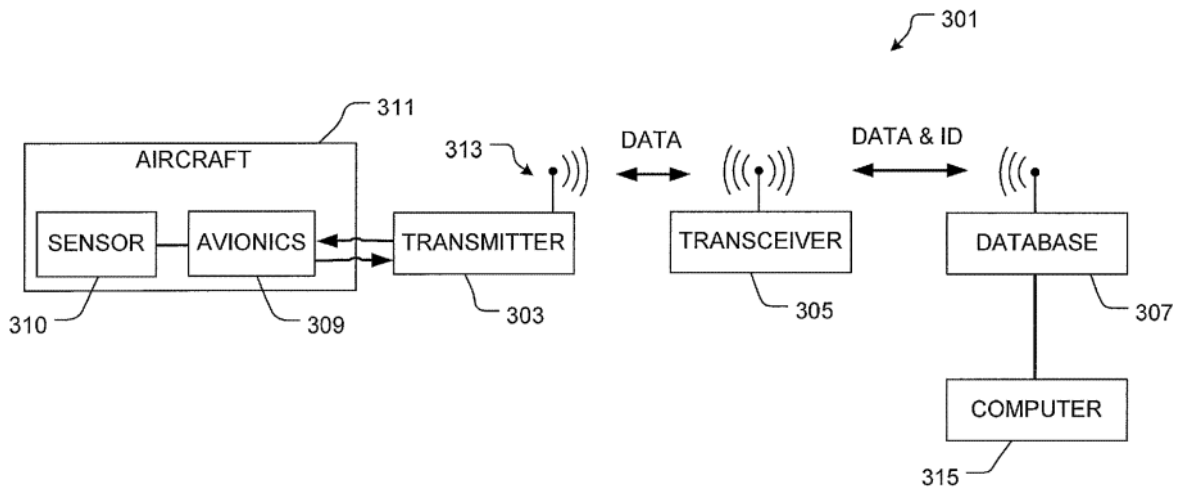

FIG. 3

'950 Patent, Figure 3

15. Transmitter 303 "is in data communication with an avionics system 309 associated with aircraft 311." (DJI-1001, 3:5-6.) During operation of the system, sensor 310 "associated with avionics system 309 senses performance data of aircraft 311 during flight, which in turn is received, stored, and transmitted to transceiver 305." (DJI-1001, 3:6-10.) In an embodiment, "transmitter 303 is a Secure Digital (SD) or a non-volatile memory card that is configured to receive, store, and/or transmit data to and from avionics system 309." (DJI-1001, 3:11-14.) Transmitter 303 further "includes a wireless device 313 configured to transmit data to and from transceiver 305." (DJI-1001, 3:14-16.)

16. Transceiver 305 "is a portable smartphone and/or tablet configured to receive data from transmitter 313 and relay the data to database 307." (DJI-1001,

3:20-22.) Transceiver 305 has "a touch or voice key entry feature that enables a user to enter information to be relayed to avionics system 309 and/or database 307." (DJI-1001, 3:23-26.)

17. Database 307 "is configured to store data from transmitter 303." (DJI-1001, 3:29-30.) The database is "operably associated with a computer 315 for viewing and analysis of the data via a computer display (not shown)." (DJI-1001, 3:30-32.) As an example, database 307 can be "configured to automatically populate aircraft and pilot logbooks with data received from the aircraft, e.g., flight hours, landings, and so forth." (DJI-1001, 3:34-38.)

18. One contemplated method of use of the '950 patent's system is "as a training exercise." (DJI-1001, 4:42-43.) In this use, "flight performance information is sent to database 307" after flight and "thereafter reviewed by a flight instructor." (DJI-1001, 4:43-46.) The flight instructor can then "provide feedback based upon the flight performance data." (DJI-1001, 4:46-48.) The '950 patent indicates in this embodiment "only the instructor has access in lieu of multiple pilots having access." (DJI-1001, 4:48-51.)

19. The '950 patent contends "the wireless connectivity discussed herein alleviates the need to remove/replace memory cards often, allows for easier integration with online/internet analysis solutions, improves user experience by integrating common devices into the solution." (DJI-1001, 4:19-23.) The '950

patent also alleges that an "[a]nother advantage of system 301 is that it uses non-aviation/off-board communication devices, e.g., transmitter 305 and computer 315, as the primary method, which allows for easier upgrades/improvements in hardware and software, as minimal qualification are [sic] required." (DJI-1001, 4:23-28.)

B. Level Of Ordinary Skill In The Art

20. A person of ordinary skill in the art ("POSITA") would have had a bachelor's degree or equivalent in the field of aeronautical engineering, electrical engineering, mechanical engineering, computer science, or equivalent training and experience, and at least one year of experience in the field of avionics or electromechanical system analysis and/or design. A higher level of education or work experience might make up for less experience, and vice versa.

C. Prosecution History

21. The '950 patent was filed with three broad independent claims (1, 11, and 17) (reproduced below). (DJI-1002, 27-30.) In the first Office Action, claim 1 was rejected as anticipated by U.S. Publication 2012/0053777 to Meisels ("Meisels"), claim 11 as obvious over Meisels in view of U.S. Publication 2010/0105329 to Durand ("Durand"), and claim 17 as obvious over Meisels in view of U.S. Publication 2013/0141572 to Torres ("Torres"). (DJI-1002, 52-64.)

1. An aircraft, comprising:

a sensor;

an avionics system associated with the sensor;

a wireless transmitter in data communication with the avionics system;

wherein the avionics system is configured to monitor aircraft flight performance data from the sensor; and

wherein the wireless transmitter is configured to wirelessly transmit aircraft flight performance data to the wireless database.

11. An aircraft flight performance monitoring system, comprising:

a wireless transmitter in data communication with an avionics systems of the aircraft;

a portable wireless transceiver associated with the wireless transmitter; and

a wireless database associated with the wireless transmitter;

wherein the wireless transmitter is configured to receive and transmit flight performance data from the avionics system to the portable wireless transceiver, which in turn is transmitted to the wireless database.

17. A method to monitor aircraft flight performance data, comprising:

sensing flight performance data with a sensor;

transmitting sensed flight data to a wireless transmitter;

wirelessly transmitting the sensed flight performance data to a wireless database; and

monitoring flight performance data with a display operably associated with the wireless database.

22. In response, Applicant amended claims 1, 11, and 17 "to include the following: (1) a database in communication with the sensor and the avionics system; and (2) wherein the database is configured to obtain and store pilot information and flight performance of the aircraft during flight." (DJI-1002, 78-87.) In the first Final Office Action, the Examiner rejected claim 1 as obvious over Meisels in view of U.S. Publication 2011/0241902 to Shavit ("Shavit"), claim 11 as obvious over Meisels, Shavit, and Durand, and claim 17 as obvious over Meisels, Shavit, and Torres. (DJI-1002, 93-106.)

23. In response to the first Final OA, Applicant amended claims 1 and 11 to recite "a transceiver in data communication with the database and configured to receive pilot information prior to flight and associate the aircraft flight performance with the pilot information." (DJI-1002, 119.) Claim 17 was amended to recite that the "obtaining and storing pilot information in a database" added previously to the claim was "prior to flight." (DJI-1002, 121.) Applicant argued that Shavit "does not disclose the use of a transceiver configured to receive pilot data prior to flight." (DJI-1002, 126.) After filing of a Request for Continued Examination ("RCE"), the Examiner issued another Office Action rejection claim 1 as obvious over Meisels, Shavit, and U.S. Patent 6,148,179 to Wright ("Wright"),

claim 11 as obvious over Meisels, Shavit, and Wright, and claim 17 as obvious over Meisels, Shavit, Wright, and Torres. (DJI-1002, 145-158.)

24. In response to the February 2016 Non-Final Office Action, Applicant amended claim 1 to recite the "transceiver having a transceiver identity associated with pilot identification information, the transceiver being configured for receiving information relating to sensed flight performance from the wireless transmitter, for associating the thus received information with the pilot identification information associated with the transceiver identity, and for transmitting the received information with the thus associated pilot identification information to the database." (DJI-1002, 171.) Claims 11 and 17 were amended to include similar limitations. (DJI-1002, 172-174.) The Examiner subsequently rejected claims 1, 11, and 17 in a Final Office Action as obvious over the combination of Meisels and Shavit. (DJI-1002, 182-194) The Examiner found Shavit discloses the added limitation by teaching "pilot information, for example, names are sent to the ground station; also data including airspeed, altitude, bank angle, which are construed as flight performance are sent to the ground server." (*Id.*)

25. In response, Applicant again amended the independent claims to (1) recite memory for the transmitter and (2) recite the action of entering the pilot specific identifier on the transceiver. (DJI-1002, 198.) Applicant again argued that Shavit failed to disclose (1) a transceiver having a transceiver ID that is associated

with a pilot ID entered on the transceiver; and (2) associating such a pilot ID with received performance data before transmitting the associated ID and performance data to a database. (DJI-1002, 202-204.) After the filing of another RCE, the Examiner rejected claim 1 as obvious over Meisels, Shavit, and Wright, claim 11 as obvious over Meisels, Shavit, Durand, and Wright and claim 17 as rejected over Meisels, Shavit, Wright, and Torres. (DJI-1002, 226-241.)

26. In response to the February 2017 Office Action, Applicant again amended the claims. In this amendment, the independent claims were amended to recite the "stored sensed flight performance is only accessible with the associated pilot identification information." (DJI-1002, 255-258.) The applicant maintained its argument regarding Shavit. The Examiner subsequently rejected independent claim 1 as obvious over Meisels, Shavit, Wright, and U.S. Publication 2007/0236366 to Cur ("Cur"), claim 17 as obvious over Meisels, Shavit, Wright, Cur, and Torres. (DJI-1002, 267-286.) Cur was added to disclose the newly added material.

27. In response to the July 2017 Office Action, Applicant maintained its position that the applied references did not disclose a transceiver ID associated with a pilot ID entered into the transceiver and associating the ID with received flight performance data. (DJI-1002, 302-309.) Applicant further argued that Cur failed to disclose that the flight performance data stored in the database is only

accessible with the associated pilot identification information. (DJI-1002, 307-308.) After a third RCE was filed, Examiner issued another Office Action maintaining each of the prior rejections. (DJI-1002, 335-351.)

28. In response, Applicant continued to argue the transceiver identity and pilot identity limitation was not disclosed. (DJI-1002, 356-363.) Applicant stressed that "the claimed system and method enters the pilot identification to the transceiver, and that the data from the transmitter to the transceiver does not have the ID information embedded." (DJI-1002, 362.) Applicant then argued the combined system transmits data "directly from the transmitter" and not from the transceiver. (*Id*.) The Examiner responded to Applicant's arguments finding Shavit discloses the "data logger 202 can be implemented on a portable device such as a smart phone that is carried onboard an aircraft" and "pilot information is collected by the data logger and also transmitted to the ground server such as pilot names." (DJI-1002, 371-388.) The Examiner then added Torres to the rejections to show a separate wireless transmitter and transceiver. (*Id*.) The Examiner again rejected claims 1 and 17 as obvious over Meisels, Shavit, Wright, Cur, and Torres and claim 11 as obvious over Meisels, Shavit, Durand, Wright and Cur.

29. In the fourth RCE, Applicant amended the independent claims again to add the limitation that the wireless transmitter[1] comprises a non-volatile memory card coupled to a memory card interface of the avionics system. (DJI-1002, 401-405.) In response to this amendment, the Examiner subsequently allowed the claims without any further comment. (DJI-1002, 412-417.)

D. Claim Construction

30. The preamble of claim 1, "*[a]n aircraft*", is limiting. The term "*an aircraft*" provides antecedent basis for "*the aircraft*" in limitations "*a sensor configured to sense flight performance of the aircraft during flight*" and "*the database being configured to store information relating to a pilot flying the*

[1] Although the examiner allowed the claims following this amendment, the use of a wireless transmitter that includes a non-volatile memory card coupled to an avionics system was well known to a POSITA well before 2018. For example, I advised a student team from Embry-Riddle Aeronautical University that used just such a system for storage and communication in the 2011 Student Unmanned Aerial Systems Competition. That system included a commercially available EYE-FI wireless SD card that had a built-in wireless transmitter and non-volatile memory. A journal paper documenting this system was published and has been publicly available on the SUAS Competition website since 2011. (*See* DJI-1013.)

aircraft during flight and the flight performance of the aircraft during flight." I note that claim 9 recites "*[a]n aircraft flight performance monitoring system*." The use of "*[a]n aircraft*" in claim 1 distinguishes this claim from claim 9 which recites similar limitations.

IV. GROUND 1: Combination of Warner, Wakutsu, and Shavit Renders Claims 1-5, 7-14, and 16 Obvious.

A. Overview of the Combination

1. Overview of Warner

31. Warner "relates to methods and apparatuses that include collecting analog or digital sensor data onboard an aircraft, analyzing said data in real-time, and transmitting the data and/or analysis of the data to a destination including a portable storage device such as a portable computer or electronic flight bag (EFB) by means including wireless transmission." (DJI-1005, 1:29-36; DJI-1006, 1:23-27.) Warner claims priority to provisional application 61/858,444 ("Warner-Prov") filed on July 25, 2013. The disclosure of Warner-Prov is largely identical to the disclosure in the first 10 columns of Warner and therefore fully supports the citations from Warner in my analysis. Throughout this declaration, I cite to Warner and provide a corresponding cite to Warner-Prov to demonstrate support for the subject matter from Warner in Warner-Prov. Additionally, in §IV.A.1.b, I show that at least one claim of Warner is supported by Warner-Prov.

a. Warner Overview

32. Warner explains that "[i]n normal operation of aircraft, pilots are typically required to carry flight bags that contain reference material such as aircraft operating manuals, flight-crew operating manuals, and navigational charts." (DJI-1005, 1:43-46; DJI-1006, 1:30-32.) To promote efficiency in flight management tasks, "electronic information management devices such as EFBs have been employed by flight crews." (DJI-1005, 1:46-49; DJI-1006, 1:32-2:2.) Warner also notes that prior art aircraft included "onboard systems which communicate in real-time with systems on the ground during the course of a flight." (DJI-1005, 1:57-59; DJI-1006, 2:7-8.) However, these "current technologies related to electronic flight bags and real-time communications systems have yet to address the need for systems and apparatus that can efficiently collect, analyze, and transmit data recorded by an aircraft's sensors or other such sensors carried aboard or affixed to the aircraft." (DJI-1005, 2:5-10; DJI-1006, 2:17-20.) "Such systems could aid commercial aircraft carriers in improving efficiency in delivery of their services to customers as applied to concerns or issues that include flight costs or flight crew performance." (DJI-1005, 2:10-13; DJI-1006, 2:20-22.)

33. Warner describes two apparatuses that support "automatic acquisition of data, analysis of the collected data, and preferably automatic wireless

transmission of the collected data and/or analysis of the collected data to a destination for storage or analysis, for example, from an aircraft by automatically transmitting the data to a portable device on the aircraft which is carried onto the aircraft by the pilot or other crew member and is removed by the pilot or other crew member when he exits the aircraft." (DJI-1005, 2:44-52; DJI-1006, 2:27-32.) A first "preferred apparatus is a NORTH QAR-3W Quick Access Recorder … with a means for wireless transmission of data." (DJI-1005, 4:26-5:17, Figure 1; DJI-1006, 4:31-5:2, Figure 1.) The second apparatus is a Multi-Function Data Acquisition Unit (MFDAU) with means for wireless transmission of data. (Warner, 5:12-15; Warner-Prov, 5:18-6:32, Figure 4.) I discuss the MFDAU embodiment in connection with Figure 4 below.

34. Warner's QAR (Quick Access Recorder) is illustrated in Figure 1 below. The QAR receives data from a Cockpit Voice Recorder (CV2R) Ethernet Feed, an Ethernet Vibration Feed, and an MFDAU Data Feed. (DJI-1005, 4:49-51; DJI-1006, 4:15-17.) The MFDAU feed "includes airframe, engine, and component data via a direct interface to digital ARINC (including but not limited to ARINC 717 and 429 data), serial (including but not limited to RS232, RS485) and analog data streams as well as aircraft state data as provided by internal and external gyros and accelerometers." (DJI-1005, 4:55-61; DJI-1006, 4:17-20.) "The collected data preferable provides detailed aircraft state, including pitch, roll, G forces, vertical

speeds, detailed engine operating parameters (i.e., turbine speeds, oil pressure & temperatures) and primary aircraft system parameters (rotor speeds, transmission and gearbox oil pressures and temperatures).” (DJI-1005, 4:61-66; DJI-1006, 4:20-24.) Detailed GPS data streams “are preferably included in the acquired data.” (DJI-1005, 5:3-5; DJI-1006, 4:27-28.)

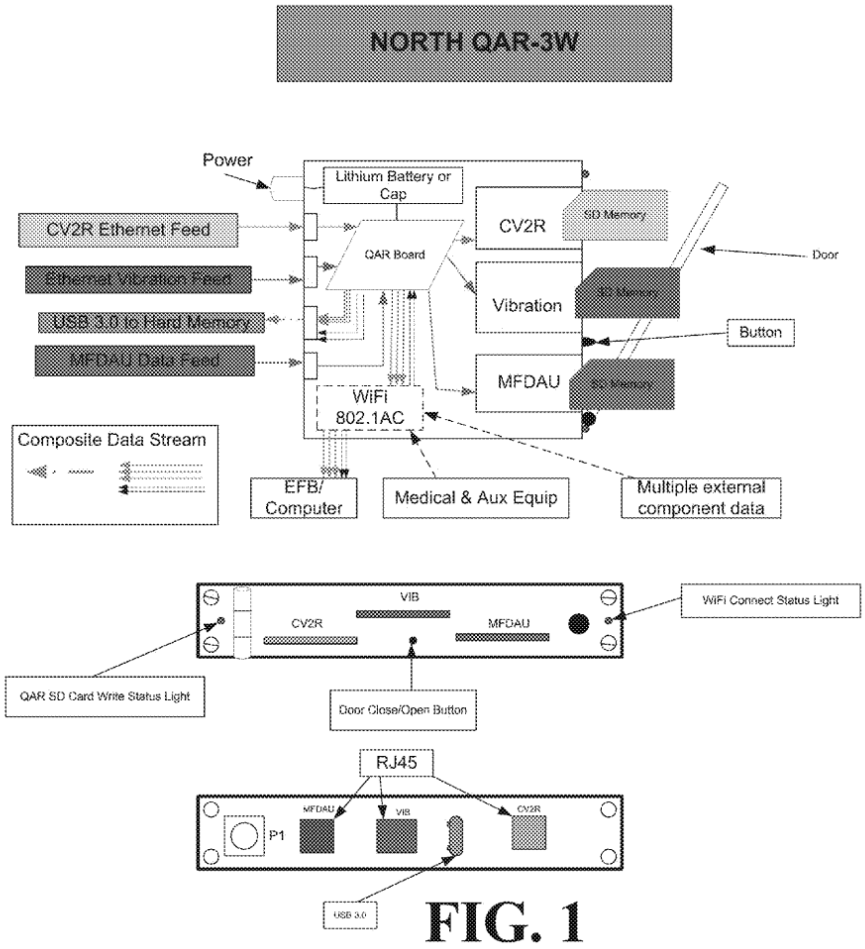

FIG. 1

Warner, Figure 1

35. Aeronautical Radio, Incorporation (“ARINC”) was organized in 1929 by four major airlines and develops specifications and standards for avionics

equipment. (DJI-1016, 4.) ARINC 429 "is a specification which defines how avionics equipment and systems should communicate with each other." (DJI-1016, 4.) Each aircraft may have different electronic equipment and systems needing interconnection. ARINC 429 identifies this equipment including the flight control computer, inertial reference system, ADIRS (Air Data Inertial Reference System)[2], AHRS (attitude and heading reference system), radio altimeter, global positioning system, thrust management computer, etc. (*See* DJI-1016, 5.) ARINC 429 defines a set of standard parameters for each type of equipment used in an aircraft. ARINC 717 specification defines the flight data record output format. (DJI-1016, 13, 14

36. After receipt of the various data streams, the "QAR board preferably directs a composite data stream to the EFB." (DJI-1005, 5:5-6; DJI-1005, 4:28-29.) The composite data stream is preferably transmitted from the QAR "to the EFB wirelessly." (DJI-1005, 5:7-9; DJI-1006, 4:29-30.)

37. Warner's QAR includes "at least one slot for receiving a storage medium" to record the collected data. (DJI-1005, 4:34-35; DJI-1006, 4:6-8, claims

[2] The Air Data Inertial Reference System (ADIRS) computes the aircraft's position, speed, altitude, attitude, and air data for the displays, flight management guidance system, flight controls, engine controls, and other systems.

2, 5.) The storage medium "is preferably a Secure Digital (SD) memory card." (DJI-1005, 4:45-46; DJI-1006, 4:12-13, claim 6.)

38. In operation, illustrated in Figure 3 below, the QAR "establishes a secure connection with the EFB wirelessly." (DJI-1005, 5:45-47; DJI-1006, 5:7-9.) "In preparation for receiving data, the EFB may create files to incorporate the transmitted data within." (DJI-1005, 5:48-50; DJI-1006, 5:10-11.) After a data connection is established, "the QAR streams the data to the EFB." (DJI-1005, 5:50-52; DJI-1006, 5:11-12.) When the data is received, "the EFB may include means of distributing the data, encrypting the data, or writing the data to the previously created files." (DJI-1005, 5:54-57; DJI-1006, 5:14-15.)

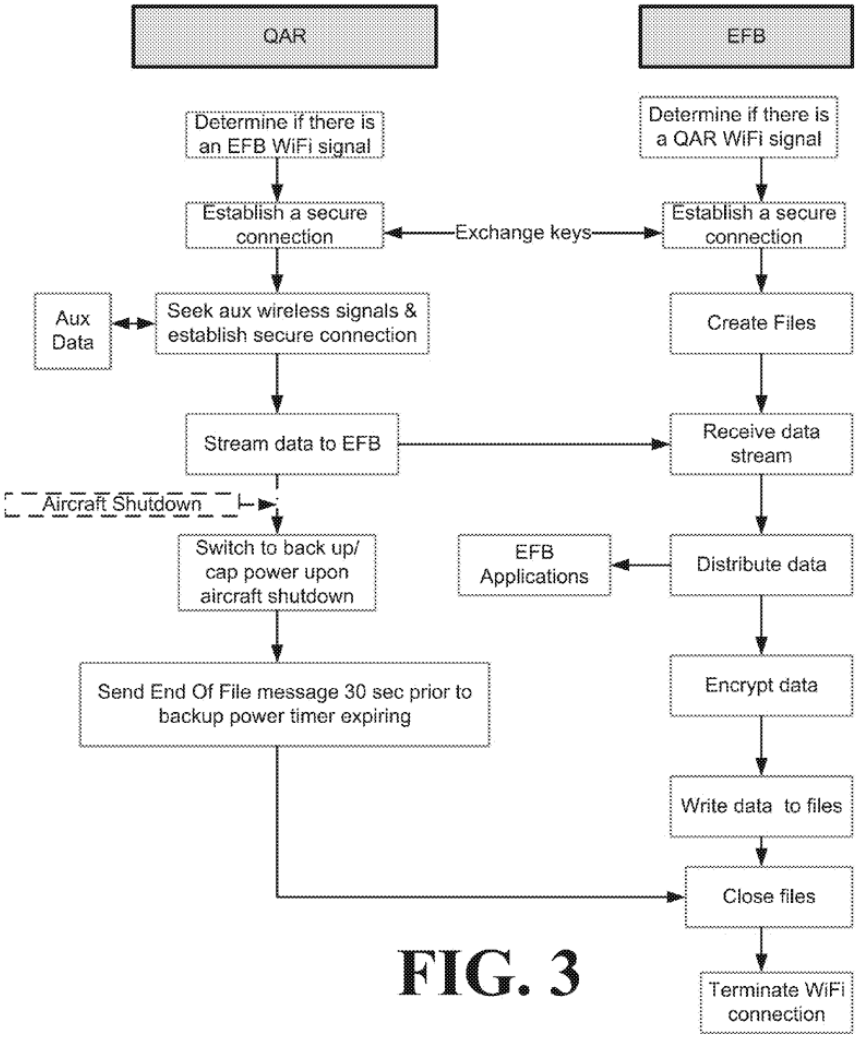

FIG. 3

Warner, Figure 3; Warner-Prov, Figure 3

39. Warner's system, illustrated in Figure 4 below, uses a Mini-Flight Data Acquisition Unit (MFDAU) as the apparatus for acquiring, analyzing, and transmitting the collected data to a destination. (DJI-1005, 5:63-66; DJI-1006, 5:19-22.) The MFDAU "includes inputs for: receiving internal data from sensors such as gyros, accelerometers, and magnetometers; pilot data; Co-pilot data; static

data; auto pilot ARINC 429; FADEC/VEMD[3] ARINC 429; Garmin global position system (GPS) ARINC 429; FDR-ARINC 717; Intellstart-RS-485; XM Weather RS-232; AC Tach Gen Inputs; 28× Digital; 32× low speed analog; 8× high speed analog; Video In—BNC Connectors; Area Mic ED-155 44.1 kHz; ICS (internet connection sharing); and SMA to L-Band." (DJI-1005, 6:54-64; DJI-1006, 6:22-28.)

[3] VEMD: Vehicle and Engine Monitoring Display, FADEC: Full Authority Digital Engine Control

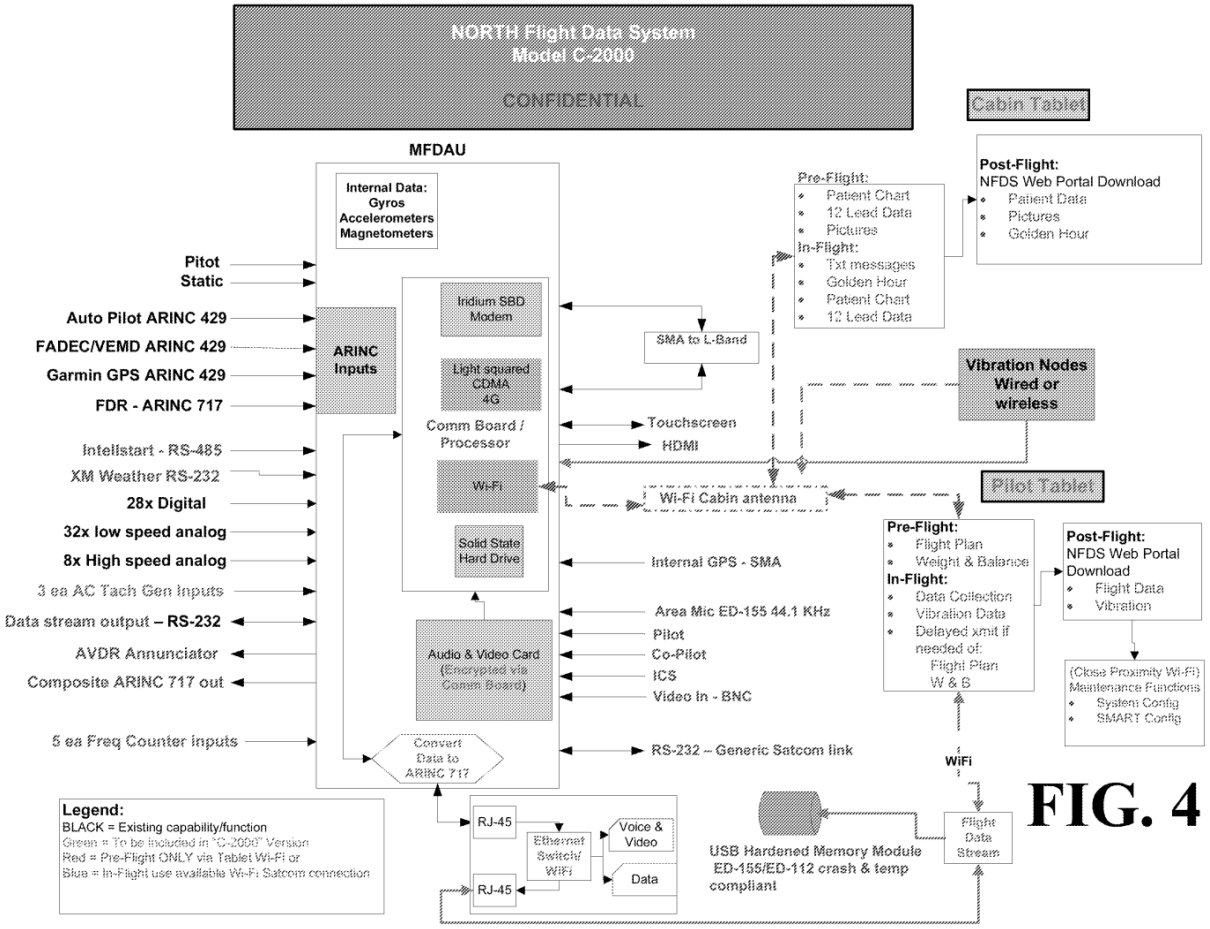

FIG. 4

Warner, Figure 4; Warner-Prov, Figure 4

40. The MFDAU includes "a Comm Board/Processors, transport communications systems inputs, an audio and video card, and means of gathering internal data from sensors." (DJI-1005, 6:38-41; DJI-1006, 6:12-14.) The Comm Board/Processors "preferably include a modem, a code divisional multiple access (CDMA), a hard drive, and the means for wireless transmission." (DJI-1005, 6:43-46; DJI-1006, 6:15-16.) The means of wireless transmission "preferably includes use of the WiFi Cabin antenna." (DJI-1005, 6:49-50; DJI-1006, 6:18-19.)

41. In operation, the QAR establishes a connection with the EFB. (DJI-1005, 9:54-61; DJI-1006, 10:21-16.) The EFB "creates at least four (4) primary files (MFDAU, Voice, Video, and Vibration) in which to store the received data." (DJI-1005, 10:17-21; DJI-1006, 11:6-7; *see also*, DJI-1005, 5:49-50; DJI-1006, 5:10-11.) The QAR then "preferably transmits all stored/buffered data and initiates the continuous flow of received data." (DJI-1005, 9:61-64; DJI-1006, 10:25-27.) When the data streams are received by the EFB, "the EFB will preferably encrypt the data (if selected by the customer) prior to storing the data in the designated file." (DJI-1005, 10:35-37; DJI-1006, 11:16-17.) "During aircraft operation (based upon customer selections) a data stream can be preferably accessed by other applications running on the same EFB which display, analyze and interact with customer commands (e.g., FOQA, Vibration Analysis, medical charting software)." (DJI-1005, 10:41-45; DJI-1006, 11:20-23.)

b. Warner-Prov Supports At Least One Claim of Warner

42. As I set forth in the following table, the Warner Provisional provides sufficient details to enable one reasonably skilled in the art to make or use the invention claimed.

Warner Claim	Support in Warner-Prov (DJI-1006)
1. An apparatus comprising:	Claim 1 ("An apparatus")
a) means for receiving data;	Claim 1 ("means for receiving data")

	4:1-5:2, 2:27-3:4 10:21-30
b) means for recording data;	Claim 1 ("means for recording data") 4:6-7, 4:12-13 10:21-30, 11:6-10
c) at least one a Quick Access Recorder (QAR) Board and a Multi Functional Data Acquisition Unit (MFDAU);	Claim 1 ("a Quick Access Recorder (QAR) Board") 4:5-6, 5:7-17
d) and a means of autonomous transmission of data from the QAR board or the MFDAU to a removable device in an aircraft which can retransmit the data autonomously when removed from the aircraft, wherein the data comprises:	Claim 1 ("and a means of transmission of data from the QAR board to a removable device in an aircraft or vehicle which can retransmit the data automatically when removed from the aircraft or vehicle") Abstract, 5:7-17, 2:27-3:4, 3:13-17, 10:21-30 Figures 1, 3
data acquired from a Cockpit Voice and Video Recorder (CV2R) Ethernet feed; data from an Ethernet Vibration feed; data from a Multi Function Data Acquisition Unit (MFDAU) Data Feed; and aircraft flight data	Claim 3 ("The apparatus of claim 1, wherein the means for receiving data includes inputs, and wherein the inputs receive data from for a Cockpit Voice Recorder (CV2R) Ethernet Feed, an Ethernet Vibration Feed, and a Mini-Flight Data Acquisition Unit (MFDAU) data Feed") Claim 20 Abstract 4:15-28 Figures 1, 3

2. Wakutsu

43. Wakutsu relates "generally to a memory system having a wireless communication function." (DJI-1007, 1:14-15.) Wakutsu notes that recently "data communication based on wireless communication is enabled between electronic devices" including personal computers, cellular phones, digital cameras and the like. (DJI-1007, 7:5-12.) Wakutsu introduces a wireless LAN "into the SD card used as a memory not only in the personal computer, and application of the built-in devices, but also in the digital camera or the like." (DJI-1007, 7:16-21.)

44. Wakutsu's memory system is illustrated in Figure 1. The memory system includes "a memory device 11 such as an SD card, and host 20." (DJI-1007, 9:20-21.) Host 20 can be a digital camera, cellular phone, personal computer, and the like. (DJI-1007, 12:15-17.) The memory device 11 includes a card controller 11a with "a host interface 12, CPU 13, read only memory (ROM) 14, random access memory (RAM) 15, buffer 16, wireless interface 17a, and memory interface 17b." (DJI-1007, 10:2-5.) A NAND flash memory 18 is connected to memory interface 17b. (DJI-1007, 10:6-8.) An antenna "configured to transmit/receive a high-frequency signal is connected to the wireless LAN signal processing section 19a." (DJI-1007, 10:11-13.) Wireless LAN signal processing section 19a "controls a wireless communication function based on, for example, Wi-Fi (registered trademark)." (DJI-1007, 10:21-24.)

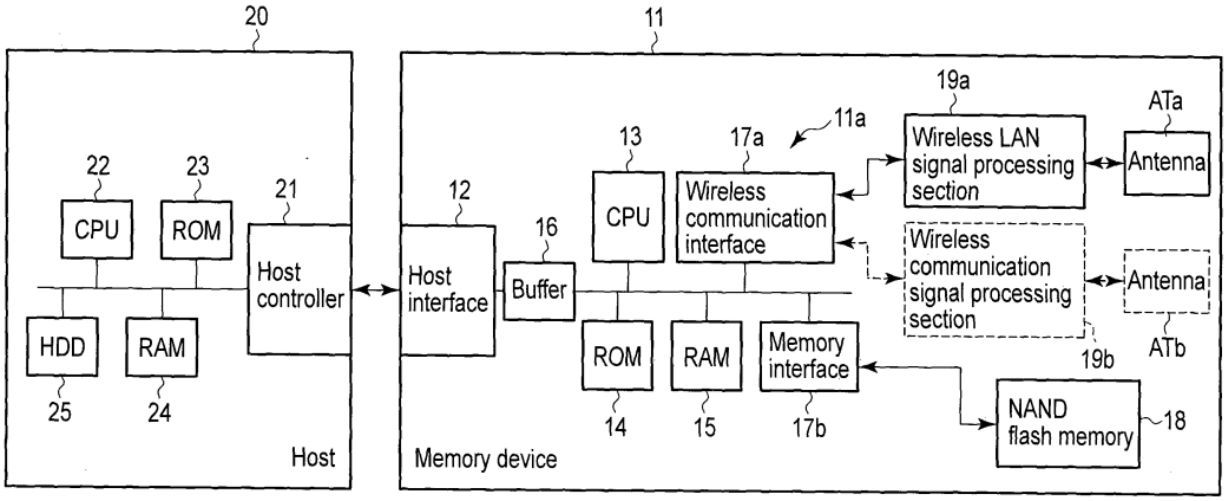

Wakutsu, Figure 1

45. The host device 20 includes a host controller 21 "configured to control the SD card 11." (DJI-1007, 29:18-20.) The host controller 21 "carries out interface processing between itself and the memory device." (DJI-1007, 13:1-3.) The memory device includes a corresponding host interface 12. (*See* DJI-1007, 10:2-5.)

3. Shavit

46. Shavit relates to "systems and methods for tracking flights, and more particularly, to systems and methods for tracking flights, including in real-time, for analyzing the performance of the pilots of these flights, and/or for making suggestions for correcting the human errors made during these flights." (DJI-1008, ¶2.) Shavit explains that most pilots "seek ways of improving their flying skills and ways to avoid repeating errors in piloting, which they or other pilots have made."

(DJI-1008, ¶3.) The errors include "errors in handling the airplane, such as flying too fast or too slow" and "errors in executing certain flight procedures, for example, turning too soon or too late, misusing navigational aids and thus not flying along assigned routes, and flying higher or lower than instructed." (DJI-1008, ¶3.) A 2001 study by the Federal Aviation Administration ("FAA") "demonstrated that most airplane accidents are the result of human errors." (DJI-1008, ¶4.)

47. Currently, "pilots might be unaware of some of their errors, and thus might repeat them." (DJI-1008, ¶5.) Even in aircraft with sophisticated avionics systems, "many human errors go unnoticed and may result in an accident." (Shavit, ¶5.) Accordingly, Shavit recognized that "a technology for helping pilots to be aware of and understand their mistakes might increase the pace of pilots' self improvement and increase flight safety." (DJI-1008, ¶5.)

48. Shavit's Figure 1 illustrates an exemplary informational flow for its flight data collection and analysis system. (DJI-1008, ¶23.) As shown, "aircraft flight information 102 may be collected and combined with auxiliary information 103 pertaining to aircraft flights, which may include but is not limited to terrain data, weather information, aircraft capability database, airport and navigational instruments' locations, and published flight procedures." (DJI-1008, ¶37.) The aircraft flight information 102 and auxiliary information 103 "may be transferred

into, stored at, and processed by the system 100." (DJI-1008, ¶37.) Shavit's system is "used for providing feedback to pilots about their flights in an actual aircraft or in a flight simulator." (DJI-1008, ¶38.)

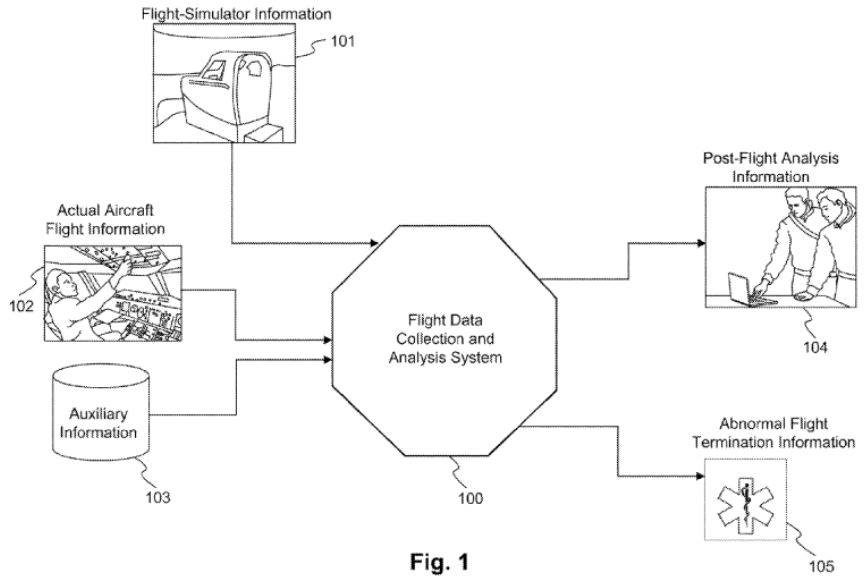

Shavit, Figure 1

49. Shavit's System 100, is illustrated in more detail in Figure 2 below. It includes "means for collecting, storing, transmitting, and receiving flight data, for example, airborne data logger 202" and "means for storing, processing, transmitting, and receiving flight data, for example, ground-based server 203." (DJI-1008, ¶39.) Airborne data logger 202 obtains and stores "location data and other flight parameter data, and transmit[s] them to a ground-based server 203." (DJI-1008, ¶39.) Airborne data logger 202 may be implemented as (1) "a computerized device that collects location information and other flight-related

data, stores it, and relays it to ground-based server 203", (2) a "software application on a portable smartphone, such as an iPhone, which is carried onboard an aircraft during flight" or (3) "a similar device, which may be either portable or embedded in an aircraft 201." (DJI-1008, ¶45.)

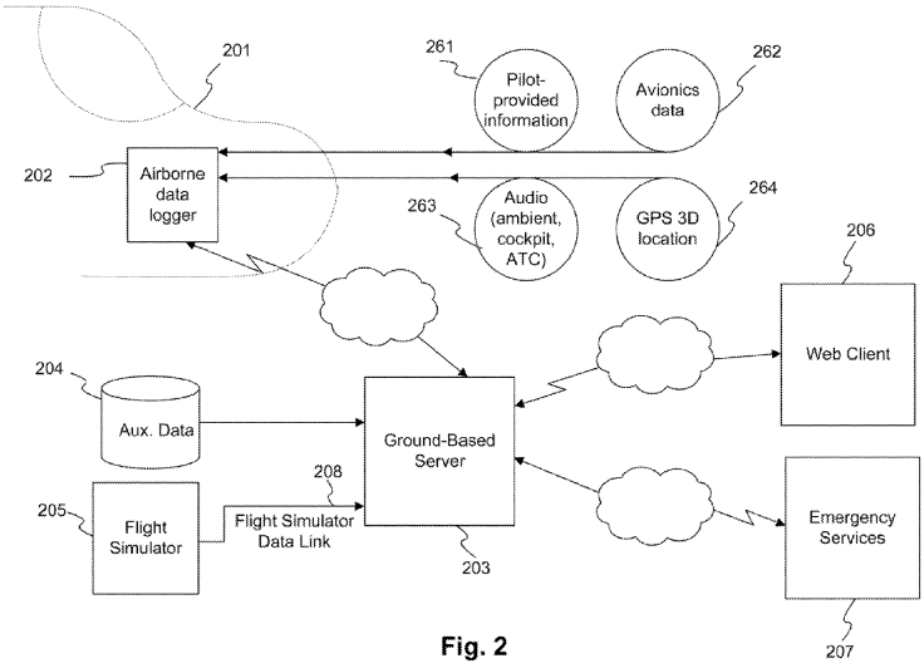

Shavit, Figure 2

50. Airborne data logger 202 provides a bi-directional data-link, implemented using wireless data communication, to ground-based server 203. (DJI-1008, ¶45.) The data sent to ground-based server 203 includes GPS information, "pilot-provided information 261, such as pilot and co-pilot names, and aircraft serial number", audio information, and "avionics data 262 from the aircraft's digital avionics systems "including airspeed, altitude, bank and pitch

angles, engine RPM, various engine temperatures, and manifold pressure. (DJI-1008, ¶¶46-50.)

51. Ground-based server 203 "store[s] flight parameters obtained from at least one airborne data logger 202 and auxiliary data 204 obtained from sources other than airborne data logger 202 and related to at least one flight whose parameters are logged by the airborne data logger 202." (DJI-1008, ¶40.) Ground-based server 203 "automatically analyze[s] both the data from airborne data logger 202 and auxiliary data 204." (DJI-1008, ¶40.) Ground-based server 203 "process[es] flight data transmitted from airborne data logger" and "store[s] it in a database such as an SQL database." (DJI-1008, ¶56.)

52. Server 203 maintains Time-Stamped Flight Data (TSFD) 506. As shown in Shavit's figure 5 below, this TSFD includes "at least one of the following items: GPS 3D location 264 (e.g., latitude, longitude, altitude, optionally enhanced by WAAS); avionics data 263 (e.g., data from the aircraft's on-board avionics systems, such as airspeed, pitch and bank angles, engine RPM and manifold pressure, and piston and oil temperatures); cockpit and air traffic control (ATC) audio 262 (e.g., cockpit conversations, ambient cockpit audio, as well as external radio communications); pilot-provided information 261 (e.g., pilots' names and the aircraft's tail number); weather 507 (information from various external sources about the weather along the flight path, including wind, temperature, barometric

pressure, cloud types and bases, and icing); photos and videos 508 taken at various times during the flight; flight plan 509 provided by the pilot and including the actual flight stages (e.g., departure procedures, routes, arrival procedure, and approach); text annotations 510 provided by a web client user and attached to certain time/location points." (DJI-1008, ¶¶57-58.)

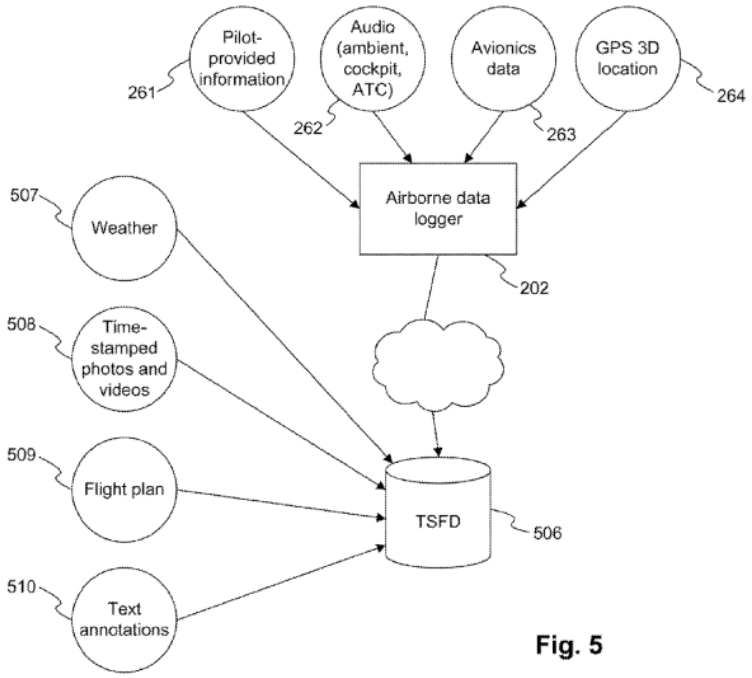

Shavit, Figure 5

53. Ground-based server 203 "communicate[s] with at least one web client 206." (DJI-1008, ¶40.) Web client 206 "display[s] data and analysis related to at least one flight, according to a user's request and authorization." (DJI-1008, ¶40.) Web client 206 is "implemented as a software program running in a web browser, such as Microsoft Internet Explorer, Mozilla Firefox, or Apple Safari,

running under operating systems such as Microsoft Windows and Macintosh OS." (DJI-1008, ¶85.) Web client 206 "permit[s] users to perform various tasks, such as remotely logging into ground-based server 203, selecting and editing flight data, and displaying collected flight data in various formats, including, but not limited to, overlaying it on satellite imagery or aviation maps, using such tools as Google Earth, in 3D." (DJI-1008, ¶85.)

54. Web client 206 "provide[s] users with secure access to flight data and analysis on ground-based server 203, presenting the data in various formats, letting the user interact with ground-based server 203, affect its operation, and modify its data." (DJI-1008, ¶87.) The log-in "allow[s] the user to access information based on the user's credentials, as determined by the web client 206 software running on the workstation." (DJI-1008, ¶87.) For example, web client 206 "allow[s] access to flight data only to the pilots of the flight and permit these pilots to share any of the data of their flights with others, either manually (per-flight) or automatically (e.g., a student pilot may setup an automatic share of all his flights with his instructor)." (DJI-1008, ¶88.)

55. In exemplary use for a pilot's self-improvement, "the pilot carries an airborne data logger 202 implemented as an application on a smartphone, such as an iPhone, to the aircraft, activates the airborne data logger 202 application, optionally connects the airborne data logger 202 to additional inputs (such as the

pilot's audio system), and if needed, types in or selects his name, the name of the co-pilot if any, and the aircraft's serial number." (DJI-1008, ¶108.) During flight, the pilot carries out the normal piloting operations and "airborne data logger 202 stores flight data and optionally transmits it continually to ground-based server 203." (DJI-1008, ¶109.) Ground-based server 203 "store[s] data obtained from airborne data logger 202 in a database and analyze[s] it." (DJI-1008, ¶110.) Later, "the pilot can use web client 206 and log into ground-based server 203." (DJI-1008, ¶111.) The pilot "may select any of his flights for analysis." (DJI-1008, ¶112.)

4. Motivation to Combine

a. Warner and Wakutsu

56. A POSITA would have been motivated to combine Wakutsu's WiFi SD card teachings with Warner's QAR. Specifically, a POSITA would have been motivated to use Wakutsu's WiFi SD card as the means for wireless transmission for the QAR and to incorporate Wakutsu's host controller and components necessary to support the SD card in the QAR, as illustrated in the exemplary figure below.

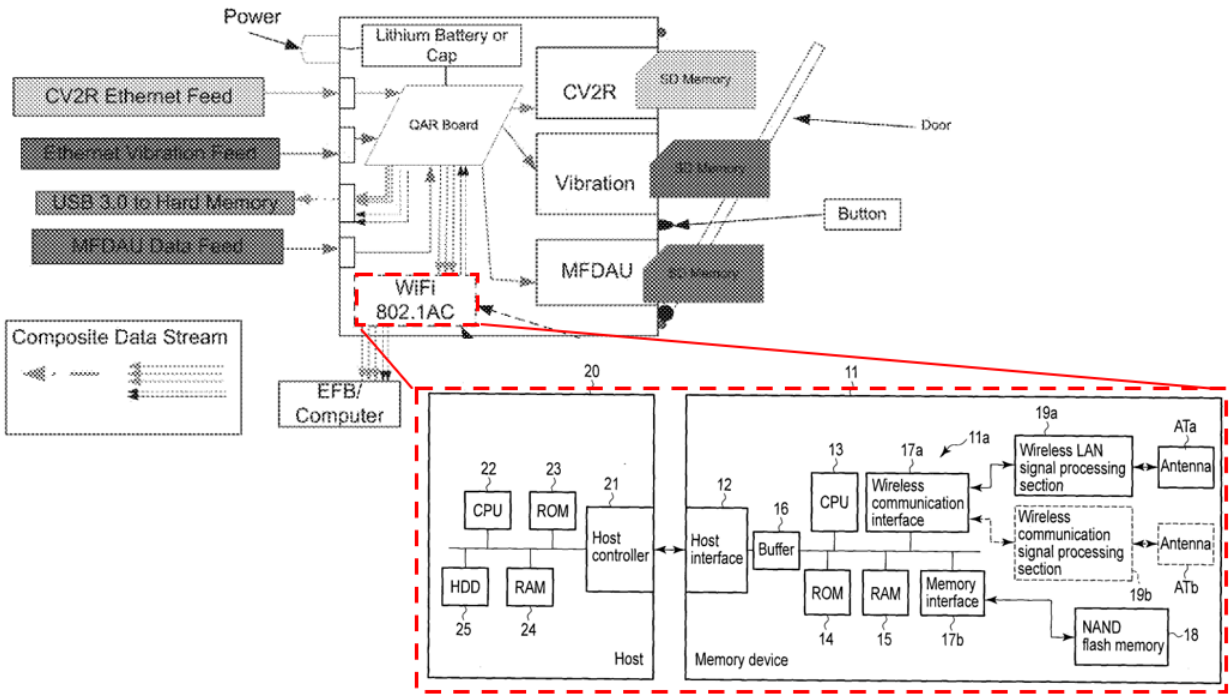

Warner, Excerpt of Figure 1; Wakutsu, Figure 1

57. Warner discloses its QAR includes a "means of transmission including wireless transmission." (*See, e.g.*, DJI-1005, 4:38-43; DJI-1006, 4:10-11.) However, Warner does not provide any further detail regarding this means for wireless transmission other than it is accomplished using IEEE WiFi standards. A POSITA would have therefore been motivated to search for techniques to implement wireless transmission in a storage device and would have been led to Wakutsu which explicitly discloses a memory system for controlling wireless communications. Wakutsu is reasonably pertinent to a particular problem faced by the '950 patent, namely the wireless transmission of data from a device. The '950 patent discloses that "transmitter 303 is a Secure Digital (SD) or a non-volatile

memory card that is configured to receive, store, and/or transmit data to and from avionics system 309." (DJI-1001, 3:11-14.) As I discussed in §III.C, the wireless memory card feature was added to the claims during prosecution to obtain allowance. As I described in footnote [1], the use of such WiFi memory cards in avionics systems were well known to a POSITA and even to undergraduate engineering students well before the priority date of the '950 patent. Thus, Wakutsu's WiFi memory card would have "logically commend[ed] itself" to an inventor's attention in considering the problem of wirelessly communicating data in a system.

58. A POSITA would have been further motivated to combine Warner and Wakutsu to simplify operation and maintenance of the QAR. Although Warner describes transmission of data to a portable device during a flight, Warner stores flight data on at least one SD card in the apparatus for other uses of the data. A POSITA would have understood using a wireless SD card for both the storage medium and wireless interface of Warner would alleviate the need for an individual to retrieve the flight data from the SD card of the apparatus after every flight for these other uses. Instead, a POSITA would have been motivated to use the wireless capabilities of the SD card to transfer the data during the flight to the portable device and to other devices as needed post flight.

59. Additionally, a POSITA would have been motivated to use a wireless SD card instead of embedded WiFi hardware in the QAR to simplify maintenance and upgrades to the wireless capabilities of the QAR and to reduce overall system size and weight, which may be especially important for small UAV applications. A POSITA would have understood that with a removable wireless card any updates or fixes can be made simply by replacing the SD card rather than replacing the entire QAR apparatus or taking the QAR out of service for an update. Additionally, using a separate SD card to provide wireless capabilities allows a QAR manufacturer to implement a simpler more cost-effective device, increasing the market for the QAR product. That is, the QAR device merely needs to include an SD card interface and not an antenna and wireless communications hardware.

60. Finally, the combination of Wakutsu's WiFi memory card with Warner is merely the substitution of one known element (Wakutsu's WiFi memory card) for another (Warner's WiFi module). The results of the combination would have been predictable, and a POSITA would have had a reasonable expectation of success in the combination. Wireless SD cards were also known before the '950 patent. For example, the SD Association announced a Wireless LAN SD standard in January 9, 2012, over a year before the priority date of the '950 patent. (DJI-1017, 1.) Further, WiFi SD cards, including those disclosed in Wakutsu, conform to SD card standards (*See* DJI-1019) and wireless communications standards (*See,*

e.g., DJI-1021, DJI-1022). Such cards are therefore "plug-and-play" compatible with the SD card slots in Warner. A POSITA would have therefore been able to substitute the WiFi module of Warner with Wakutsu's WiFi memory card because Warner's QAR includes SD memory cards and SD cards were widely used prior to the '950 patent. (*See, e.g.,* DJI-1005, 4:34-35, 4:45-46; DJI-1006, 4:6-7, 4:12-13.)

b. Warner, Wakutsu, and Shavit

61. A POSITA would have been motivated to combine Shavit's data logger application teachings with the combined system of Warner and Wakutsu. Specifically, as illustrated below, a POSITA would have been motivated to (1) implement Shavit's data logger as an application on Warner's pilot tablet/EFB and (2) use Shavit's ground-based network (server, SQL database and web client) and associated applications as Warner's "corporate data infrastructure for long time processing and preservation." (*See* DJI-1005, 7:43-48; DJI-1006, 7:24-28.) Shavit and Warner are both from the same field of endeavor as the '950 patent, namely aircraft data collection and monitoring.

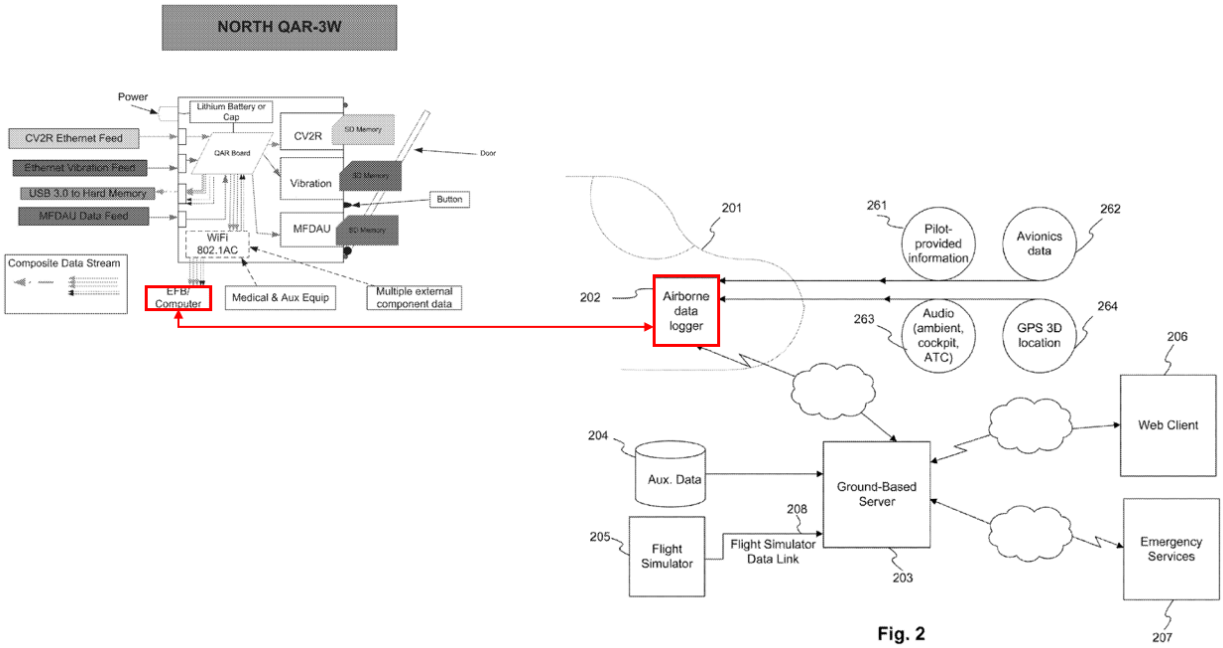

Warner, Figure 1 (Left); Shavit, Figure 2 (Right)

62. Warner and Shavit both suggest the combination. Warner teaches that the pilot tablet/EFB supports multiple applications. Shavit teaches that the Airborne data logger 202 (outlined in red in the above figure), "may also be implemented as a software application on a portable smartphone, such as an iPhone, which is carried onboard an aircraft during flight. Airborne data logger 202 may also be implemented on a similar device, which may be either portable or embedded in an aircraft 201." (DJI-1008, ¶45.) Shavit's data logger would therefore run as an application on Warner's pilot tablet (also outlined in red in the above figure). Warner suggests the combination, teaching that the pilot tablet/EFB supports multiple applications. Warner discloses that "[d]uring aircraft operation

(based upon customer selections) a data stream can be preferably accessed by **other applications running on the same EFB** which display, analyze and interact with customer commands (e.g., FOQA, Vibration Analysis, medical charting software)." (DJI-1005, 10:41-45; DJI-1006, 11:20-23; *see also*, DJI-1005, 8:43-45; DJI-1006, 9:3-4 (recorded data "is preferably made available to **other software programs** the customer wishes to run").) Warner further suggests that one desirable application is analyzing flight performance as well as flight crew performance. (DJI-1005, 2:10-13 (the system "could aid commercial aircraft carriers in improving efficiency in delivery of their services to customers as applied to concerns or issues that include flight costs or **flight crew performance**"); DJI-1006, 2:20-23.) Shavit describes its data logger "as an application" running on a device such as a smartphone. (DJI-1008, ¶108.) And one use disclosed by Shavit's data logger application is "for a pilot's self-improvement" which is consistent with Warner's suggested use cases in analysis for FOQA and flight crew performance. (DJI-1008, ¶108.) Thus, based on Warner's suggestions, a POSITA would have been motivated to combine Shavit's data logger application and ground-based network teachings with Warner's data collection system.

63. A POSITA would have further been motivated to combine Warner, Wakutsu, and Shavit based on the guidelines set forth by the FAA for EFBs. (DJI-

1015.) Specifically, the FAA guidelines state that an EFB "must be able to host Type A and/or Type B software applications." (DJI-1015, 2.) Type A applications include "aircraft flight log and servicing records", "pilot flight and duty-time logs", "flight crew qualification logs", and "aircraft captain's logs." (DJI-1015, Appendix 1.) Type B applications include "master flight plan/updating." (DJI-1015, Appendix 2.) A POSITA would have therefore been motivated to incorporate Shavit's data logger application to provide the log applications set forth in the FAA EFB guidelines.

64. A POSITA would have further been motivated to incorporate Shavit's data logger application and ground-based network teachings, including pilot performance monitoring, with Warner and Wakutsu to improve flight safety. Shavit suggests the combination describing an FAA study that "demonstrated that most airplane accidents are the result of human errors." (DJI-1008, ¶4.) The FAA confirmed the need for a system using flight data to improve safety in its 2004 circular regarding the development, implementation, and operation of a voluntary Flight Operational Quality Assurance (FOQA) program. (DJI-1018.) FOQA is "a voluntary safety program that is designed to make commercial aviation safer by allowing airlines and pilots to share de-identified aggregate information with the FAA." (DJI-1018, 1.) Warner teaches support for FOQA. (*See* DJI-1005, 7:23-27, 7:57-63; DJI-1006, 7:12-17, 8:2-6.) A POSITA would have therefore understood

and been motivated to incorporate Shavit's data logger application and ground-based performance analysis capabilities with Warner to track pilot performance, identify errors and areas for improvement, and in turn, to improve flight safety.

65. Finally, the combination is merely the use of a known technique (Shavit's data logger application and performance monitoring system) to improve similar devices (Warner's pilot tablet/EFB and corporate infrastructure) in the same way (provide pilot performance analysis) and applying a known technique (Shavit's data logger application and performance monitoring system) to a known device (Warner's pilot tablet/EFB and corporate infrastructure) ready for improvement. The results of the combination would have been predictable to a POSITA and a POSITA would have had a reasonable expectation of success because Shavit's data logger application is a software application running on a computer device and Shavit's performance monitoring system uses standard database technology and web applications. Software applications running on devices such as tablets were well-known by 2013 and a POSITA would have understood how to implement and integrate such applications on Warner's pilot table/EFB.

B. Independent Claim 1

66. The combination of Warner, Wakutsu, and Shavit renders claim 1 obvious. I reproduce claim 1 below with labels added for ease of discussion.

[1P] An aircraft, comprising:

[1A] a sensor configured to sense flight performance of the aircraft during flight;

[1B] an avionics system associated with the sensor, the avionics system comprising:

[1B.1] a memory card interface;

[1C] a database in data communication with the sensor and the avionics system,

[1C.1] the database being configured to store information relating to a pilot flying the aircraft during flight and the flight performance of the aircraft during flight;

[1D] a wireless transmitter having memory,

[1D.1] the wireless transmitter in data communication with the avionics system and the database,

[1D.2] the wireless transmitter comprising a non-volatile memory card coupled to the memory card interface of the avionics system; and

[1E] a transceiver comprising an input device,

[1E.1] the transceiver having a transceiver identity associated with pilot identification information,

[1E.2] the transceiver being configured for receiving information relating to sensed flight performance from the wireless transmitter, for associating the thus received information with the pilot identification information associated with the transceiver identity, and for transmitting the received information

with the thus associated pilot identification information to the database;

[1F] wherein the transceiver is a wireless transceiver in data communication with the wireless transmitter;

[1G] wherein the wireless transceiver is configured to wirelessly receive and transmit aircraft flight performance data to the database;

[1H] wherein the stored sensed flight performance is only accessible with the associated pilot identification information;

[1I] wherein the avionics system is configured to monitor aircraft flight performance data from the sensor; and

[1J] wherein the pilot identification information is entered directly into the input device of the transceiver.

1. Preamble [1P]

67. Warner and Shavit both disclose systems and methods implemented and used on an "*aircraft*." Warner "relates to methods and apparatuses that include collecting analog or digital sensor data onboard an **aircraft**, analyzing said data in real-time, and transmitting the data and/or analysis of the data to a destination including a portable storage device such as a portable computer or electronic flight bag (EFB) by means including wireless transmission." (DJI-1005, 1:30-36; DJI-1006, 1:23-28 ("The application of this invention includes sensor data gathered from vehicles used in field of avionics such as aircraft"); DJI-1005, Title ("System, methodology, and process for wireless transmission of sensor data onboard an

aircraft to a portable electronic device"), DJI-1006, Title; Warner, Abstract, Warner-Prov, Abstract.) Shavit similarly relates to "collecting flight data associated with an **aircraft**." (DJI-1008, ¶2, Title ("Systems and methods for **aircraft** flight tracking and display"), Abstract.)

68. The combination of Warner, Wakutsu, and Shavit discloses an "*aircraft*" [1P]. Because the preamble is limiting, each limitation recited in claim 1 must be part of the "*aircraft*." The combination of Warner, Wakutsu, and Shavit discloses an "*aircraft*" with the recited limitations.

2. "*Sensor*" [1A].

69. Warner's "method or apparatus includes a process of collecting data." (DJI-1005, 7:8-9; DJI-1006, 7:3-4.) The collected data "preferably includes internal and external data that may further include data acquired from an analog or digital sensor." (DJI-1005, 7:9-12; DJI-1006, 7:4-5.) The sensor data "also includes aircraft, state, component data, voice, video, and vibration information." (DJI-1005, 7:12-13; DJI-1006, 7:5-6.) The sensor data is generated during a flight of the aircraft. (*See, e.g.,* DJI-1005, claims 8, 15; DJI-1006, claims 23, 41.)

70. Warner therefore discloses the "*aircraft*" includes "*a sensor configured to sense flight performance of the aircraft during flight*" [1A].

3. "*Avionics System*" [1B]/[1I][4]

71. Warner discloses an apparatus including "the automatic acquisition of data, analysis of the collected data, and preferably automatic wireless transmission of the collected data and/or analysis of the collected data to a destination for storage or analysis, for example, from an aircraft by automatically transmitting the data to a portable device on the aircraft which is carried onto the aircraft by the pilot or other crew member and is removed by the pilot or other crew member when he exits the aircraft." (DJI-1005, 2:44-52; DJI-1006, 2:27-32.) Warner's apparatus is illustrated in Figure 1 below. As shown, the apparatus is labeled the "NORTH QAR-3W." (DJI-1005, Figure 1; DJI-1006, Figure 1.) Warner's QAR is part of the "*avionics system*" of the aircraft because it is an electronic component used on an aircraft.

[4] In some cases where a later limitation recites content that is closely related to an earlier limitation (as is the case with 1B and 1I), I discuss those limitations together.

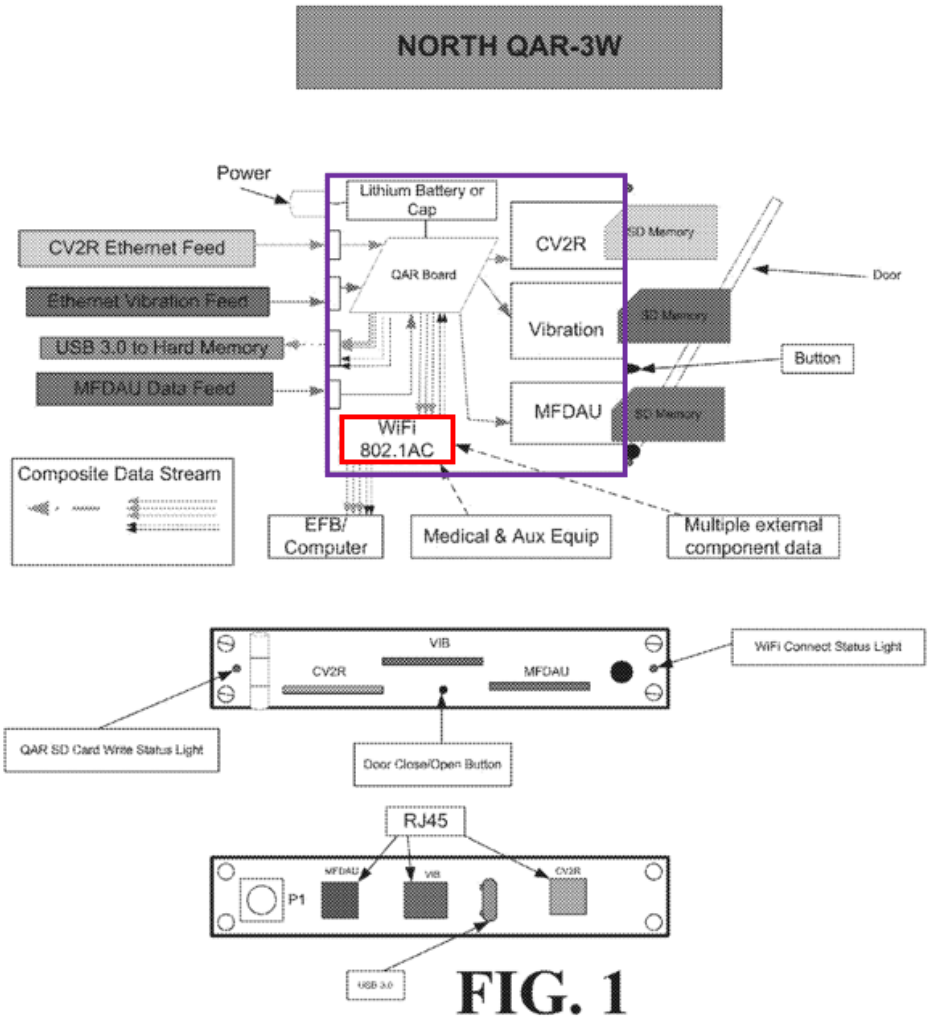

FIG. 1

Warner, Annotated Figure 1

72. Warner's QAR includes "inputs for a Cockpit Voice Recorder (CV2R) Ethernet Feed, an Ethernet Vibration Feed, a Multi Function Data Acquisition Unit (MFDAU) Data Feed; a Universal Serial Bus (USB) 3.0 Adapter to Hard Memory; a Quick Access Recorder (QAR) Board." (DJI-1005, 4:27-39; DJI-1006, 4:2-9.) The MFDAU feed received by the QAR "preferably includes airframe, engine, and component data via a direct interface to digital ARINC

(including but not limited to ARINC 717 and 429 data), serial (including but not limited to RS232, RS485) and analog data streams as well as aircraft state data as provided by internal or external gyros and accelerometers." (DJI-1005, 4:55-61; DJI-1006, 4:17-20.) Thus, the data feed includes data obtained from one or more sensors. The data collected by the apparatus "preferably provides detailed aircraft state, including pitch, roll, G forces, vertical speeds, detailed engine operating parameters (i.e., turbine speeds, oil pressure & temperatures) and primary aircraft system parameters (rotor speeds, transmission and gearbox oil pressures and temperatures)." (DJI-1005, 4:61-66; DJI-1006, 4:20-24.) Thus, the collected data is related to the performance of the aircraft.

73. The combination of Warner, Wakutsu, and Shavit discloses an "*avionics systems associated with the sensor*" [1B] and "*the avionics system is configured to monitor aircraft flight performance data from the sensor*" [1I/

74. Warner's apparatus includes "at least one slot for receiving a storage medium to record data collected from a Cockpit Voice Recorder (CV2R) Ethernet Feed, an Ethernet Vibration Feed, a Multi Function Data Acquisition Unit (MFDAU) Data Feed; and means of transmission including wireless transmission." (DJI-1005, 4:34-39; DJI-1006, 4:6-7.) Figure 1 of Warner shows a door allowing access to the one or more slots in the top view and the middle view. (*See* DJI-1005, Figure 1; DJI-1006, Figure 1.) The storage medium of the apparatus "is preferably

a Secure Digital (SD) memory card." (DJI-1005, 4:45-46; DJI-1006, 4:12-13, claim 6.)

75. The SD Association is a collection of companies which set memory card standards. One of the standards released by the SD Association is the "Part 1: Physical Layer Simplified Specification." (*See* DJI-1019, 11-13.) The Physical Layer Specifications set forth the general shape and contacts of an SD memory card, illustrated in Figure 3-11 from the Simplified Specification. (*See* DJI-1019, 11-13.) Thus, an SD card has a physical form factor and interface contacts defined by the SD card standards.

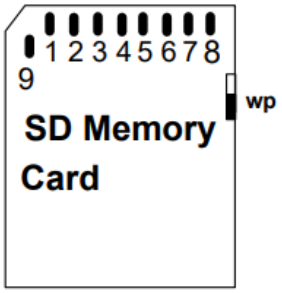

SD Association Physical Layer Simplified Specification, Figure 3-11

76. From the perspective of the SD card, the QAR is a host device. The host controller 21 in the host device (Warner's QAR) "carries out interface processing between itself and the memory device 11" and "issues various commands." (DJI-1007, 12:27-13:3, Figure 1 below.) The physical slot receiving the SD memory card and the host controller are each a "*memory card interface*" [1B.1] in the "*avionics system*" (QAR). Thus, the combination of Warner,

Wakutsu, and Shavit discloses an "*avionics system*" (QAR) having a "*a memory card interface*" [1B.1].

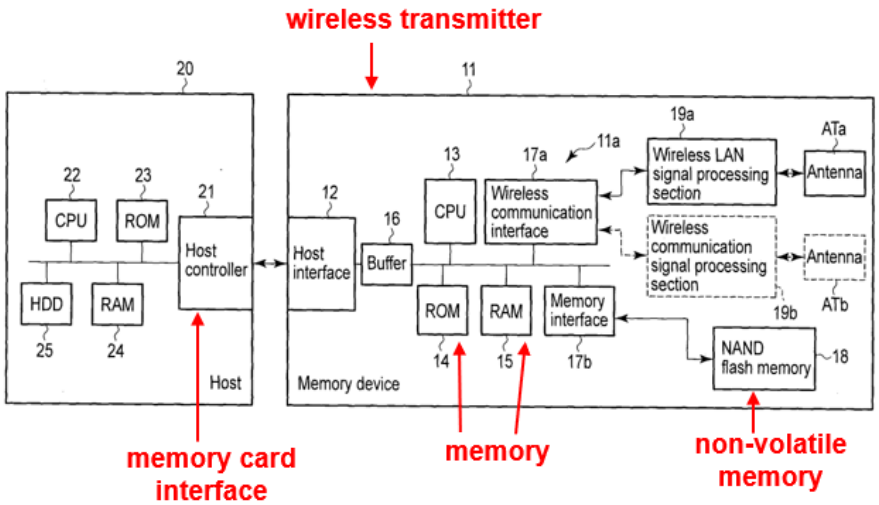

Wakutsu, Annotated Figure 1

4. "*Database*" [1C]

77. The combination of Warner, Wakutsu, and Shavit discloses a database in the aircraft "*in data communication with the sensor and the avionics system*" that "*store[s] information relating to a pilot flying the aircraft during flight and flight performance of the aircraft during flight*" and a database external to the aircraft that "*store[s] information relating to a pilot flying the aircraft during flight and flight performance of the aircraft during flight*." Because the preamble of claim 1 is limiting, the internal aircraft database meets the "*database*" limitations. However, should an argument be made that the preamble is not limiting, the

external "*database*" taught by the combination of Warner, Wakutsu, and Shavit also meets this limitation.

a. "*Database*" in the aircraft.

78. As I discussed in §§IV.A.1.a, IV.B.2, the QAR receives data from sensors through one or more of its data feeds such as the MFDAU data feed. Once received the "QAR board preferably directs a composite data stream to the EFB." (DJI-1005, 5:5-6; DJI-1006, 4:28-29.) The composite data stream is preferably transmitted wirelessly. (DJI-1005, 5:7-9; DJI-1009, 4:29-30.) Warner describes the process of establishing the wireless connection between the QAR and EFB. In Warner, when the "system initially boots up the QAR-3W wifi", the system "looks for a receiving device." (DJI-1005, 8:22-23; DJI-1006, 8:23-24.) When the EFB "recognizes the QAR wifi", a connection is open "to write live stream of data to the EFB memory." (DJI-1005, 8:25-29; DJI-1006, 8:25-27.)

79. "Upon the acquisition of a positive WiFi connection, the EFB preferably creates at least four (4) primary files (MFDAU. Voice, Video, and Vibration) in which to store the received data." (DJI-1005, 10:18-21, DJI-1006, 11:6-7.) The portable device (EFB) "contain[s] a governing application which drives the logic for WiFi connection, security, file structure, and data processing including the option to apply high level encryption to a specified data stream." (DJI-1005, 10:25-28, DJI-1006, 11:11-13.) A database is a "collection of logically

related data stored together in one or more computerized files." (DJI-1020, 304.) Thus, the structured information that is stored in a file structure of the EFB is a "*database*." Because the sensors communicate data to the QAR ("*avionics system*") which communicates the data to the "*transceiver*" of the pilot tablet/EFB which then communicates the data to the "*database*", the "*database* [is] *in data communication with the sensor and the avionics system*" [1C]."

80. Shavit similarly discloses that "[a]ll of the flight data collected by the airborne data logger 202" is "stored in a persistent **database** on the airborne data logger 202, together with the time of data collection." (DJI-1008, ¶62.) Thus, Shavit confirms that the file structure of the EFB is a "*database*" in the combination.

81. In Warner, the pilot tablet/EFB is placed in the aircraft and allowed "to operate on its own battery power" or mounted "in the aircraft via a docking station." (DJI-1005, 9:39-46; DJI-1006, 10:11-15.) The combination of Warner, Wakutsu, and Shavit therefore discloses the "*aircraft*" comprises "*a database in data communication with the sensor and the avionics system*" [1C].

82. The data received at the QAR via the MFDAU feed includes, for example, "airframe, engine, and component data via a direct interface to digital ARINC (including but not limited to ARINC 717 and 429 data)" and "aircraft state data as provided by internal and external gyros and accelerometers," collected

during the flight. (DJI-1005, 4:55-61, claims 8, 15; DJI-1006, 4:17-20, claims 23, 41.) This data is wirelessly transmitted by the Wi-Fi SD card to the portable device running the data logger application where it is stored in the persistent file storage as taught by both Warner and Shavit. Thus, the combination of Warner, Wakutsu, and Shavit discloses the "*database being configured to store information relating to … flight performance of the aircraft during flight.*"

83. Shavit explains during pre-flight, "the pilot carries an airborne data logger 202 implemented as an application on a smartphone, such as an iPhone, to the aircraft, activates the airborne data logger 202 application, optionally connects the airborne data logger 202 to additional inputs (such as the pilot's audio system)." (DJI-1008, ¶108; *see also*, ¶66 ("pilot enters an aircraft serial number into airborne data logger 202").) The pilot "types in or selects his name, the name of the co-pilot if any, and the aircraft's serial number." (DJI-1008, ¶108.) This information is "*information relating to a pilot flying the aircraft*."

84. Subsequently, the data logger sends "pilot-provided information 261, such as pilot and co-pilot names, and aircraft serial number" and avionics data 262 from the aircraft's digital avionics systems "including airspeed, altitude, bank and pitch angles, engine RPM, various engine temperatures, and manifold pressure" to the ground-based server. (DJI-1008, ¶¶46-50.) Thus, the pilot-provided information is also stored in the data logger database so that it can be transmitted to

the ground-based server. Thus, the combination of Warner, Wakutsu, and Shavit discloses "*database being configured to store information relating to a pilot flying the aircraft during flight and the flight performance of the aircraft during flight*" [1C.1].

b. "*Database*" external to the aircraft.

85. Warner's method includes "combining hardware and software into an apparatus that can be carried, wherein the apparatus wirelessly collects, encrypts, provides for critical near real time processing, and packages data for off load to a corporate data infrastructure for long time processing and preservation." (DJI-1005, 7:43-48; DJI-1006, 7:25-28.) Shavit's data logger which in the combination is running as an application on Warner's pilot tablet/EFB "collects location information and other flight-related data, stores it, and relays it to ground-based server 203." (DJI-1008, ¶45.) Specifically, data logger 202 "provides a bi-directional data-link to ground-based server 203." (DJI-1008, ¶45.) Shavit's ground-based server 203 "process[es] flight data transmitted from airborne data logger 202" and "store[s] it in a **database** such as an SQL **database**." (DJI-1008, ¶56.)

86. In the combination of Warner, Wakutsu, and Shavit, the Wi-Fi SD card receives flight data from the QAR ("*avionics system*") collected from various sensors and communicates the flight data to the pilot tablet/EFB running the data

logger which, in turn, relays the data to the ground-based server which stores the data in a database. (*See* §IV.B.2.) The combination of Warner, Wakutsu, and Shavit therefore discloses "*a database in data communication with the sensor and the avionics system*" [1C] if the preamble is not limiting.

87. The ground-based server 203 maintains the stored data as Time-Stamped Flight Data (TSFD), illustrated in Figure 5 below. (DJI-1008, ¶57.) The TSFD includes the following data from the data logger: "GPS 3D location 264 (e.g., latitude, longitude, altitude, optionally enhanced by WAAS); avionics data 263 (e.g., data from the aircraft's on-board avionics systems, such as airspeed, pitch and bank angles, engine RPM and manifold pressure, and piston and oil temperatures); cockpit and air traffic control (ATC) audio 262 (e.g., cockpit conversations, ambient cockpit audio, as well as external radio communications)." (DJI-1008, ¶58.) This information is "*information relating to … flight performance of the aircraft during flight*."

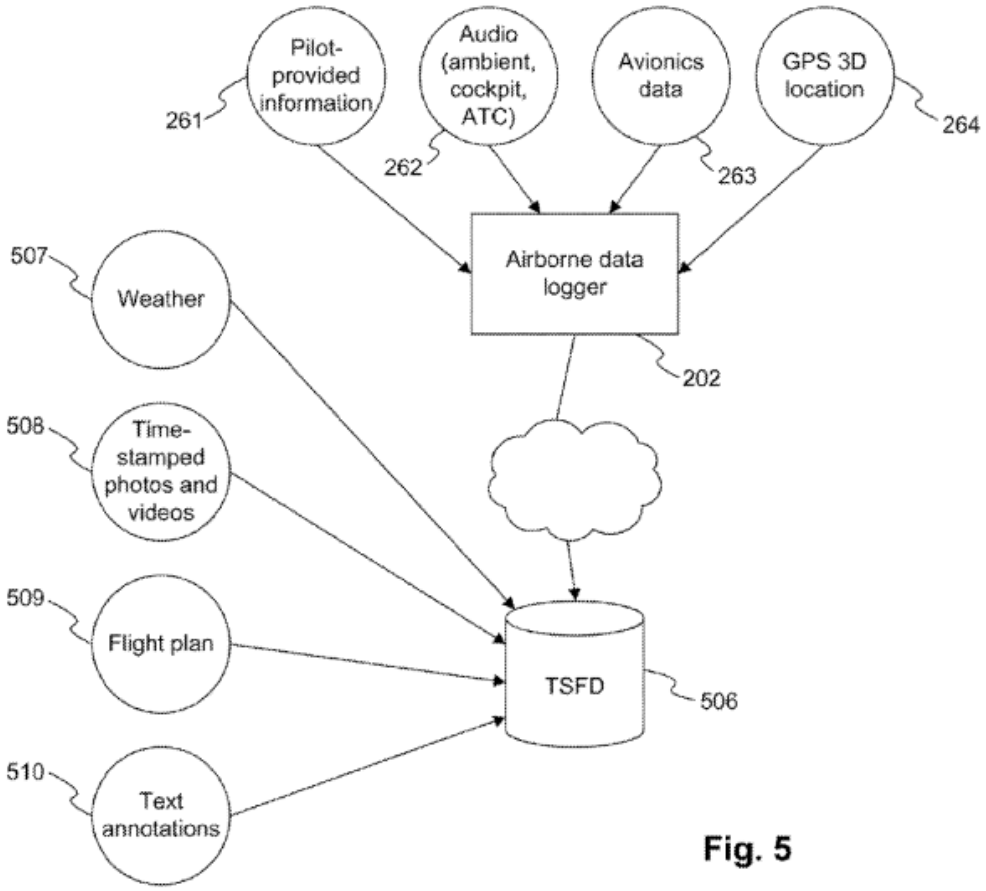

Shavit, Figure 5

88. The TSFD also includes "pilot-provided information 261 (e.g., pilots' names and the aircraft's tail number)" from the data logger (DJI-1008, ¶¶58, 48) and "cockpit and air traffic control (ATC) audio 262 (e.g., cockpit conversations, ambient cockpit audio, as well as external radio communications)" (DJI-1008, ¶¶58, 50). These are each an example of "*information relating to a pilot flying the aircraft.*"

89. The stored TSFD also includes data from other sources including "weather 507 (information from various external sources about the weather along the flight path, including wind, temperature, barometric pressure, cloud types and bases, and icing); photos and videos 508 taken at various times during the flight; flight plan 509 provided by the pilot and including the actual flight stages (e.g., departure procedures, routes, arrival procedure, and approach); text annotations 510 provided by a web client user and attached to certain time/location points." (DJI-1008, ¶58.) This also includes "*information relation to a pilot flying the aircraft*" (photos and videos) and "*information relating to … flight performance of the aircraft during flight*" (actual flight stages).

90. Thus, the combination of Warner, Wakutsu, and Shavit discloses an external "*database being configured to store information relating to a pilot flying the aircraft during flight and flight performance of the aircraft during flight*" [1C.1].

5. "*Wireless transmitter*" [1D]

91. Claim 1 recites a set of limitations directed to a "*wireless transmitter.*" I reproduce these limitations below.

> **[1D]** a wireless transmitter having memory,
>
> **[1D.1]** the wireless transmitter in data communication with the avionics system and the database,

> **[1D.2]** the wireless transmitter comprising a non-volatile memory card coupled to the memory card interface of the avionics system.

92. As I discussed in §IV.A.4, in the combination of Warner, Wakutsu, and Shavit, the Wi-Fi SD card (e.g., Wakutsu's card 11), illustrated in Figure 1 below, provides SD memory and the wireless communication means for the QAR apparatus[5]. Wakutsu's Wi-Fi SD card includes a wireless LAN signal processing section 19a connected to a wireless communication interface. (DJI-1007, 10:8-10.) "An antenna ATa configured to transmit/receive a high-frequency signal is connected to the wireless LAN signal processing section 19a." (DJI-1007, 10:11-13.) Card 11 further includes read only memory (ROM) 14 and random access memory (RAM). (DJI-1007, 10:2-4.) Wakutsu's Card 11 is therefore a "*wireless transmitter having memory*" [1D].

---

[5] As I have noted previously, commercially available SD cards with built-in WiFi were well know and in use in aircraft avionic systems before the priority date of the '950 patent. These SD cards were plug-and-play compatible with existing SD card slots. Thus, while I discuss the Wakutsu's disclosure here, I believe a POSITA would otherwise have known that the WiFi SD cards were readily available and desirable substitutes for separate SD cards and WiFi modules.

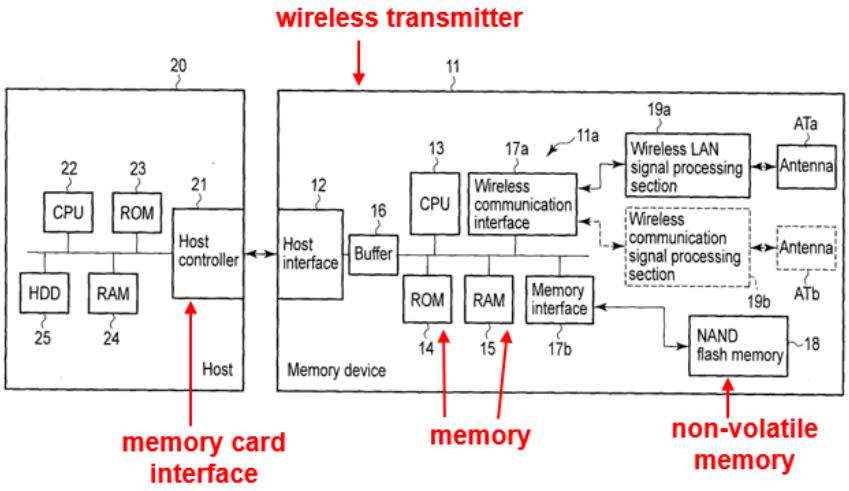

Wakutsu, Annotated Figure 1

93. As shown in annotated Figure 1 of Warner, the QAR receives input data via a Cockpit Voice Recorder (CV2R) Ethernet Feed, an Ethernet Vibration Feed, and an MFDAU Data Feed. (*See* DJI-1005, 4:27-32; DJI-1006, 4:2-4.) The MFDAU feed includes, for example, "airframe, engine, and component data via a direct interface to digital ARINC (including but not limited to ARINC 717 and 429 data), serial (including but not limited to RS232, RS485) and analog data streams as well as aircraft state data as provided by internal and external gyros and accelerometers." (DJI-1005, 4:55-61; DJI-1006, 4:17-20.) "The collected data preferably provides detailed aircraft state, including pitch, roll, G forces, vertical speeds, detailed engine operating parameters (i.e., turbine speeds, oil pressure & temperatures) and primary aircraft system parameters (rotor speeds, transmission and gearbox oil pressures and temperatures)." (DJI-1005, 4:61-66; DJI-1006, 4:20-

24.) Detailed GPS data streams "are preferably included in the acquired data." (DJI-1005, 5:3-5; DJI-1006, 4:27-28.)

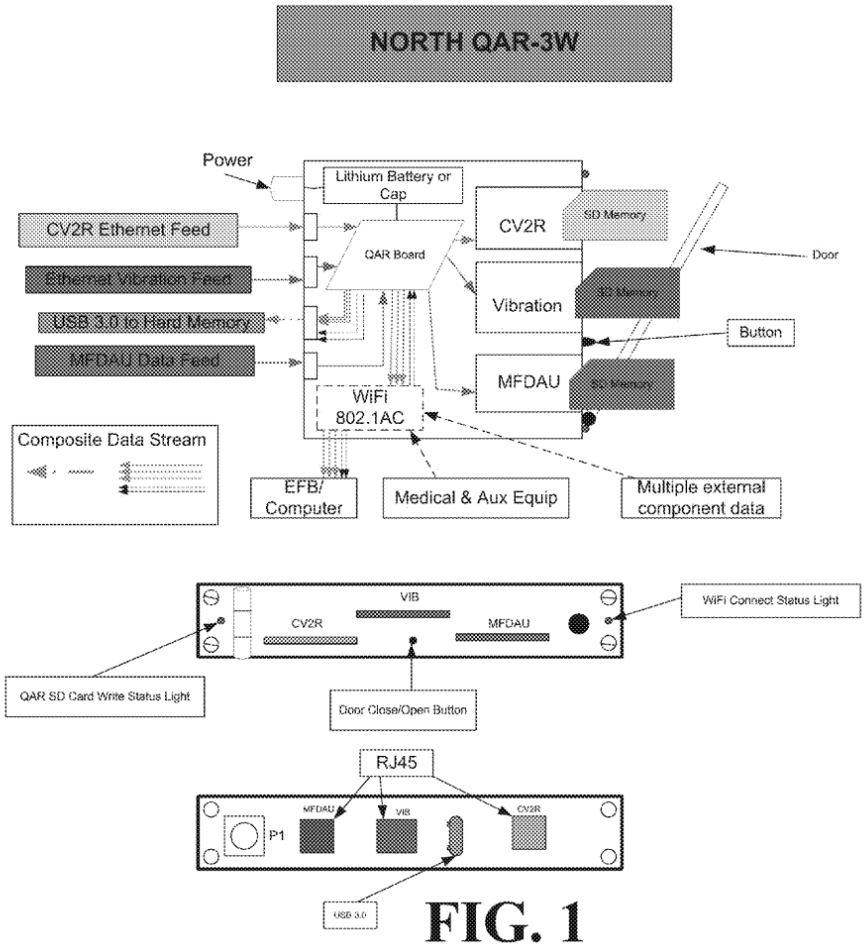

FIG. 1

Warner, Figure 1

94. The collected data "is automatically wirelessly transmitted to the EFB" and stored in files at the pilot tablet/EFB. (DJI-1005, 3:21-31, 2:44-48, 10:18-26; DJI-1006, Abstract, 2:27-29, 11:6-15, claims 1, 30.) In the combination of Warner, Wakutsu, and Shavit, the collected data is then downloaded to the ground-based server and stored "in a database such as a SQL database." (*See* DJI-

1008, ¶¶45, 56.) Thus, the combination of Warner, Wakutsu, and Shavit discloses "*the wireless transmitter in data communication with the avionics system and the database*" internal to the pilot tablet/EFB and to a "*database*" external to the aircraft.

95. Wakutsu's WiFi card 11 further includes NAND flash memory 18 which is non-volatile memory. The "*wireless transmitter*" therefore comprises "*a non-volatile memory card.*" The combination of Warner and Wakutsu therefore discloses that when the SD card is inserted into the card slot, "*the wireless transmitter comprising a non-volatile memory card coupled to the memory card interface of the avionics system*" [1D.2].

6. "*Transceiver*" [1E].

96. Claim 1 recites a set of limitations directed to "*a transceiver*":

> **[1E]** a transceiver comprising an input device,
>
> **[1E.1]** the transceiver having a transceiver identity associated with pilot identification information,
>
> **[1E.2]** the transceiver being configured for receiving information relating to sensed flight performance from the wireless transmitter, for associating the thus received information with the pilot identification information associated with the transceiver identity, and for transmitting the received information with the thus associated pilot identification information to the database;

[1F] wherein the transceiver is a wireless transceiver in data communication with the wireless transmitter;

[1G] wherein the wireless transceiver is configured to wirelessly receive and transmit aircraft flight performance data to the database;

…

[1J] wherein the pilot identification information is entered directly into the input device of the transceiver

a. "*Transceiver*"

97. A POSITA would understand that a transceiver is a device that transmits and receives data. This understanding comports with the disclosures in the '950 patent, which discusses the transceiver, shown in Figure 3, and broadly describes it as simply a component that both transmits and receives:

- "Further, the system includes a portable wireless transceiver that receives and transmits flight performance data and/or pilot information associated with the flight performance data to the wireless database." (DJI-1001, 2:5-11)
- "In the contemplated embodiment, transceiver 305 is a portable smartphone and/or tablet configured to receive data from transmitter 313 and relay the data to database 307." (DJI-1001, 3:20-22)
- "It is contemplated utilizing short-range wireless communication from transmitter 303 to transceiver 305 and

utilizing long-range communication from transceiver 305 to database 307." (DJI-1001, 3:50-53)

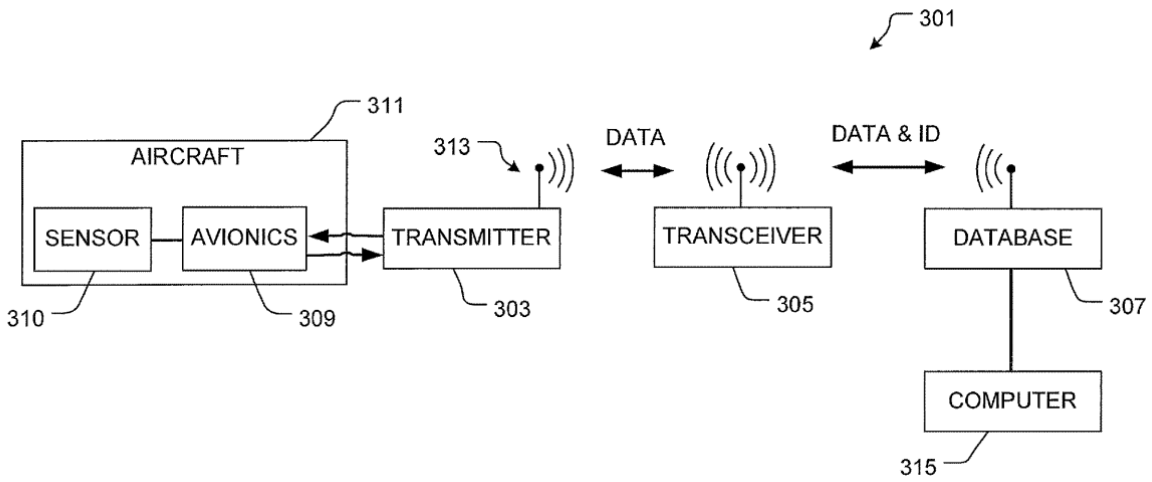

'950 Patent, Figure 3

98. As I discussed in §IV.A.4, the pilot tablet/EFB runs Shavit's data logger application. (*See, e.g.,* DJI-1008, ¶108 (data logger is "an application on a smartphone") In Warner, collected data "is automatically **wirelessly transmitted to** the EFB or other portable electronic device carried by the pilot or other crew member onto the aircraft, then automatically **wirelessly downloaded from** the EFB or other portable electronic device after the EFB or other portable electronic device is removed from the aircraft by the pilot or other crew member, typically when the portable electronic device connects to a network after it is removed from the aircraft." (DJI-1005, 3:21-29, 7:49-55; DJI-1006, 7:29-8:1.) Shavit similarly discloses the device running the data logger application provides a **bi-directional**

data-link, implemented using wireless data communication, to ground-based server 203. (DJI-1008, ¶45.) Thus, the pilot tablet/EFB is configured to both transmit and receive data—i.e., it includes a "*transceiver*." As discussed in §IV.B.4.a, the pilot tablet/EFB is either placed in the aircraft, operating on its own power, or mounted in a docking station affixed to the airframe. (*See* DJI-1005, 9:39-46; DJI-1006, 10:11-15.) The "*transceiver*" included in the pilot tablet/EFB is therefore in the aircraft as required by the preamble.

b. *"Transceiver comprising an input device"* [1E], "*Pilot identification information is entered directly*" [1J]

99. The pilot tablet/EFB running the data logger application includes an "*input device*" to permit the pilot to input data and configuration settings into the device. In Shavit, using this interface, the pilot "types in or selects his name, the name of the co-pilot if any, and the aircraft's serial number." (DJI-1008, ¶108; *see also*, ¶66 ("pilot enters an aircraft serial number into airborne data logger 202").) Additionally, the FAA released guidance on the use of EFBs in June 2012. (*See* DJI-1015, 1.) In the list of design considerations, EFB guidelines specify requirements for the user "input devices" of an EFB. (DJI-1015, 17.) Specifically, the guidance mentions "input devices such as keyboards or cursor-control devices." (DJI-1015, 17.) This confirms that Warner's pilot tablet/EFB also

includes "*an input device.*" Thus, the combination of Warner, Wakutsu, and Shavit discloses "*a transceiver comprising an input device*" [1E].

100. The name of the pilot entered into the pilot tablet/EFB is "*pilot identification information.*" (DJI-1008, ¶108.) Thus, the combination of Warner and Shavit discloses "*pilot identification information is entered directly into the input device of the transceiver*" [1J].

c. "*Transceiver having a transceiver identity*" [1E.1]

101. The combination of Warner, Wakutsu, and Shavit teaches or at least suggests "*the transceiver having a transceiver identity*." The '950 patent includes one brief mention of a transceiver identity: "The method also allows the data to be associated with the pilot/user via the transceiver 305 identity … ." (DJI-1001, 4:32-36.) The '950 patent does not discuss what is being used as the "transceiver identity", how the "transceiver identity" is defined for its system, or the steps required to associate pilot identification information with the transceiver identity. The specification however does indicate "wireless communications is occurring through a **standardized** and controlled **interface**." (DJI-1001, 4:28-30.) A POSITA would therefore understand that the "transceiver identity" in the '950 patent encompasses data associated with the standardized wireless protocol being used for communication (e.g., IEEE 802.11).

102. Warner discloses that its wireless communication, including communication between the QAR and portable device, is "preferably accomplished through a Wifi router with the IEEE 802.11ac standard." (DJI-1005, 4:41-43; DJI-1006, 4:10-11.) Wakutsu discloses its SD card is "a Wi-Fi SD card." (DJI-1007, 29:16-17.) Wakutsu further references use of IEEE 802.11 standards. (*See* DJI-1007, claim 10 and claim 20.) Shavit also discusses that the device running its data logger "provides a bi-directional data-link to ground-based server" using "wireless data communication including, but not limited to, a cellular data link …" (DJI-1008, ¶45.) IEEE 802.11 (WLAN) is such a bi-directional wireless data-link.

103. A POSITA would have understood that a networking device, such as Warner's portable device that communicates via a wireless protocol includes a Media Access Control ("MAC") address assigned by the device manufacturer. The MAC address is a unique identifier assigned to the network interface controller (NIC) for use as a network address in communications. For example, IEEE 802 networking technologies including Ethernet and Wi-Fi (802.11) use MAC addresses in the medium access control sublayer of the data link layer. MAC addresses are assigned by the device manufacturers. IEEE assigns MAC address blocks to manufacturers.

104. Specifically, an 802.11 frame "may contain up to four address fields." (DJI-1021, 40.) Address 1 is the destination address, corresponding to the final recipient: "the station that will hand the frame to higher protocol layers for processing." (*Id*.) Address 2 identifies "the source of the transmission." (*Id*.) Address 3 is the receiver address that "indicates which wireless station should process the frame." (DJI-1021, 41.) For a wireless station, the receiver address is the destination address. (*Id*.) The final address is the transmitter address which is used "to identify the wireless interface that transmitted the frame onto the wireless medium." (*Id*.) This address is used only in wireless bridging. (*Id*.)

105. Because the pilot tablet/EFB of Warner, Wakutsu, and Shavit wirelessly receives and transmits data over a network using the standardized IEEE 802.11 protocol, the device has a MAC address which is the recited "*transceiver identity*." This is consistent with the '950 patent which associates the "*transceiver identity*" with the use of a standardized protocol.

106. As I discussed in §IV.B.4.a, "*pilot identification information*" is stored in the "*database*" of the pilot tablet/EFB. By storing the "*pilot identification information*" in the pilot tablet/EFB having a "*transceiver identity*" (MAC address), the "*transceiver identity* [is] *associated with pilot identification information*."

107. The "*pilot identification information*" is subsequently transmitted with the flight performance data to the ground-based server using the 802.11 protocol. (*See* DJI-1005, 4:41-43; DJI-1006, 4:10-11; DJI-1008, ¶¶46-50.) In Shavit, the "data sent from airborne data logger 202 to ground-based server 203 may include real-time Global Positioning System (GPS) information 264, including latitude, longitude, and altitude" (DJI-1008, ¶46), "Wide Area Augmentation System (WAAS) enhanced GPS information" (DJI-1008, ¶47), "pilot-provided information 261, such as pilot and co-pilot names, and aircraft serial number ("tail number")" (DJI-1008, ¶48), and avionics data including "at least one of airspeed, altitude, bank and pitch angles, engine RPM, various engine temperatures, and manifold pressure" (DJI-1008, ¶50). That is, the pilot tablet/EFB running the data logger application ("*transceiver*") associates the pilot identification information with the received flight performance information for transmission in one or more wireless message(s) to the ground-based server.

108. Should PO contend that Shavit does not explicitly disclose an embodiment that transmits "*pilot identification information*" with the flight performance data, I disagree. Shavit discloses that its ground-based TSFD stores flight data and pilot identification information. (*See* DJI-1008, ¶¶56-58, §IV.A.3.) Shavit further discloses that pilot's access the TSFD datastore via web client 206 that allow the pilot to access their flight data. (*See* DJI-1008, ¶88.) A POSITA

would have therefore understood that flight performance data would be transmitted with the pilot identification information to provide the necessary information for the received data to be associated with the proper record(s) in the TSFD. Accordingly, a POSITA would have understood that Shavit discloses transmitting "*pilot identification information*" with the flight performance data. Alternatively, a POSITA would have been motivated to communicate flight performance data with pilot identification information to enable the association of flight performance data with the pilot identification information. Therefore, if PO argues this limitation is not explicitly disclosed by Shavit, Shavit renders this limitation obvious.

109. Because the pilot table/EFB includes its MAC address in all wireless transmissions, the transmitted data, including the "*pilot identification information*" is associated with the MAC address of the pilot tablet/EFB ("*transceiver identity*"). The combination of Warner, Wakutsu, and Shavit discloses the "*transceiver identity associated with pilot identification information*" for this further reason.

d. "*Transceiver being configured for …*" [1E.2], [1F], [1G]

110. Warner discloses methods and apparatus that "include the acquisition of detailed aircraft state and systems data, analysis of the collected data, and **transmission of the collected data** and/or analysis of the collected data to a destination **automatically** via a portable electronic device which is carried onto and off of the aircraft by the pilot or another crew member." (DJI-1005, Abstract,

2:44-48; DJI-1006, Abstract, 2:27-3:4, claims 1, 30; see also, DJI-1005, 5:7-9; DJI-1006, 4:29-30.) Specifically, the methods and apparatus "include collecting analog or digital sensor data onboard an aircraft, analyzing the data in real-time, and **automatically transmitting the data** and/or analysis of the data **to a destination including a portable storage device** such as a portable computer, electronic flight bag (EFB), or smart phone, by means such as wireless transmission, for automatic transfer to another destination when the portable computer, electronic flight bag (EFB), or smart phone is off of the aircraft." (DJI-1005, Abstract, 2:44-48; DJI-1006, Abstract, 2:27-3:4, claims 1, 30; see also, DJI-1005, 5:7-9; DJI-1006, 4:29-30.)

111. In the combination of Warner, Wakutsu, and Shavit, the "automatic transmission" from the QAR to the pilot tablet/EFB is by the Wi-Fi SD card ("*the wireless transmitter*"). (*See* §IV.A.4.) The combination of Warner, Wakutsu, and Shavit discloses "*the transceiver being configured for receiving information relating to sensed flight performance from the wireless transmitter …*" [1E.2] and "*the transceiver is a wireless transceiver in data communication with the wireless transmitter*" [1F].

112. As discussed above, the pilot tablet/EFB associates received flight performance data with the "*pilot identification information*" which is associated with the transceiver identity. This data is then transmitted by the communications

"*transceiver*" of the pilot tablet/EFB to the "*database*" of the pilot tablet/EFB for storage in the pilot's files (log). (*See* §IV.B.4.) Data received by the pilot tablet/EFB is also "automatically wirelessly downloaded from the EFB or other portable electronic device after the EFB or other portable electronic device is removed from the aircraft." (DJI-1005, 3:21-31; DJI-1006, Abstract, claim 35.) For example, in Warner, the portable device "packages data for off load to a corporate data infrastructure for long time processing and preservation." (DJI-1005, 7:43-48; DJI-1006, 7:25-28.) The data transmitted to ground-based server 203 in the combination includes "pilot-provided information 261, such as pilot and co-pilot names, and aircraft serial number" (DJI-1008, ¶48) and avionics data 262 from the aircraft's digital avionics systems "including airspeed, altitude, bank and pitch angles, engine RPM, various engine temperatures, and manifold pressure" (DJI-1008, ¶50; *see also*, §IV.B.6.c.)

113. The combination of Warner, Wakutsu, and Shavit therefore discloses "*the transceiver being configured … for associating the thus received information with the pilot identification information associated with the transceiver identity, and for transmitting the received information with the thus associated pilot identification information to the database*" [1E.2]. Additionally, unlike the "*transmitter*", which claim 1 recites is a "*wireless transmitter*", claim 1 does not limit the "*database*" to only a wireless database. Accordingly, the phrase "*the*

wireless transceiver is configured to wirelessly receive and transmit aircraft flight performance data to the database" [1G] encompasses embodiments in which the transceiver wirelessly receives aircraft performance data from the "*wireless transmitter*" and "*transmit[s]*" in any manner "*to the database*." Thus, the combination of Warner, Wakutsu, and Shavit further discloses "*the wireless transceiver is configured to wirelessly receive and transmit aircraft flight performance data to the database*" [1G].

7. "*Only Accessible*" [1H].

114. As I discussed in §IV.B.4, the "*sensed flight performance*" data is stored in at least two locations in the combined system of Warner, Wakutsu, and Shavit: the local "*database*" of the pilot tablet/EFB and the external ground-based server "*database*." In both storage locations, "*the stored sensed flight performance is only accessible with the associated pilot identification information*" [1H].

115. Warner's pilot tablet/EFB contains a "governing application which drives the logic for WiFi connection, security, file structure, and data processing including the option to apply high level encryption to a specified data stream." (DJI-1005, 10:25-28; DJI-1006, 11:11-13.) "The application will preferably have a set up function that will store security settings and customer driven options within nonvolatile memory." (DJI-1005, 10:29-32; DJI-1006, 11:13-15.) Although Warner does not explicitly disclose the security settings used in the portable

device, a POSITA would have understood that the pilot tablet/EFBis protected using common access security techniques such as the pilot's log-in and password. As one example, U.S. Patent 8,495,722 to McCusker discloses that a "user logs into a portable electronic device or an application thereof using one or more credentials (e.g., a username and password combination)." (DJI-1023, 8:5-7.) As I discuss below, Shavit teaches the use of a user's credentials to control access to stored data. (*See* DJI-1008, ¶87.) The combination of Warner, Wakutsu, and Shavit therefore teaches or at least suggests the "*the stored sensed flight performance* [in the internal database of the pilot tablet/EFB] *is only accessible with the associated pilot identification information*" [1H].

116. After the flight data is stored in the external database, ground-based server 203 "communicate[s] with at least one web client 206" which "display[s] data and analysis related to at least one flight, according to a user's request and authorization." (DJI-1008, ¶40.) The log-in for the user "allow[s] the user to access information based on the user's credentials, as determined by the web client 206 software running on the workstation." (DJI-1008, ¶87, claim 33 ("establishing a secure connection with a remote database based on user credentials").) The user credential for a pilot includes "*pilot identification information.*" For example, web client 206 "allow[s] access to flight data **only to the pilots of the flight** and permit these pilots to share any of the data of their flights with others, either manually

(per-flight) or automatically (e.g., a student pilot may setup an automatic share of all his flights with his instructor).” (DJI-1008, ¶88, see also, DJI-1008, claim 33 (“establishing a secure connection with a remote database based on user credentials).)

117. Thus, in the combination of Warner, Wakutsu, and Shavit, “*the stored sensed flight performance* [in the ground-based database] *is only accessible with the associated pilot identification information*” [1H].

C. Independent Claim 9

118. The combination of Warner, Wakutsu, and Shavit renders claim 9 obvious. I reproduce claim 9 below with labels added for ease of discussion.

> **[9P]** An aircraft flight performance monitoring system, comprising:
>
> **[9A]** a wireless transmitter having memory,
>
> **[9A.1]** the wireless transmitter in data communication with an avionics system of an aircraft,
>
> **[9A.2]** the avionics system comprising a memory card interface and the wireless transmitter comprising a non-volatile memory card coupled to the memory card interface of the avionics system;
>
> **[9B]** a database in data communication with the avionics system,

[9B.1] the database being configured to store information relating to a pilot flying the aircraft during flight and flight performance of the aircraft during flight;

[9C] a transceiver comprising an input device;

[9C.1] the transceiver having a transceiver identity associated with pilot identification information,

[9C.2] the transceiver being configured for receiving information relating to sensed flight performance from the wireless transmitter, for associating the thus received information with the pilot identification information associated with the transceiver identity, and for transmitting the received information with the thus associated pilot identification information to the database;

[9D] wherein the stored sensed flight performance is only accessible with the associated pilot identification information;

[9E] wherein the wireless transmitter is configured to receive and transmit flight performance data from the avionics system to the transceiver, which in turn is transmitted to the database; and

[9F] wherein the pilot identification information is entered directly into the input device of the transceiver.

1. Preamble [9P]

119. Warner's system performs "automatic acquisition of data, analysis of the collected data, and preferably automatic wireless transmission of the collected data and/or analysis of the collected data to a destination for storage or analysis." (DJI-1005, 2:44-52; DJI-1006, 2:27-32.) Analysis contemplated by Warner

includes analysis supporting the FAA's voluntary Flight Operation Quality Assurance (FOQA) program. (DJI-1005, 7:25-27; DJI-1006, 7:13-14.) FOQA is program involving "*aircraft flight performance monitoring*." (*See* DJI-1018.)

120. Shavit is titled "systems and methods for aircraft flight tracking and display." (DJI-1008, Title.) As such, Shavit provides systems "for tracking flights, including in real-time, for analyzing the performance of the pilots of these flights, and/or for making suggestions for correcting the human errors made during these flights." (DJI-1008, ¶2.)

121. Thus, the combination of Warner, Wakutsu, and Shavit discloses an "*aircraft performance monitoring system*" [9P].

2. "*Wireless Transmitter*" Limitations [9A]-[9A.2]

122. Claim 9's "*wireless transmitter*" limitations are substantially overlapping with limitations of claim 1 as illustrated in the following table.

Claim 1	Claim 9
[1B] an avionics system associated with the sensor, the avionics system comprising:	
[1B.1] a memory card interface	
[1D] a wireless transmitter having memory,	**[9A]** a wireless transmitter having memory

[1D.1] the wireless transmitter in data communication with the avionics system and the database,	**[9A.1]** the wireless transmitter in data communication with an avionics system of an aircraft,
[1D.2] the wireless transmitter comprising a non-volatile memory card coupled to the memory card interface of the avionics system; and	**[9A.2]** the avionics system comprising a memory card interface and the wireless transmitter comprising a non-volatile memory card coupled to the memory card interface of the avionics system;

123. Limitation [9A] is identical to limitation [1D]. For the reasons I discussed in §IV.B.5, the combination of Warner, Wakutsu, and Shavit discloses limitation [9A].

124. The preamble of claim 1 recites an "*aircraft*" and limitation [1B] recites "*an avionics system associated with a sensor*." For the same reasons as I discussed in §§IV.B.1, 3, the combination of Warner, Wakutsu, and Shavit discloses an "*avionics system of an aircraft*." Limitation [1D.1] recites "*the wireless transmitter in data communication with the avionics system and the database*." For the same reasons I discussed in §IV.B.5, the combination of Warner, Wakutsu, and Shavit discloses "*the wireless transmitter in data communication with an avionics system of an aircraft*" [9A.1].

125. Limitation [1B.1] recites that the "*avionics system*" comprises "*a memory card interface*." Accordingly, the first part of limitation [9A.2] ("*the*

avionics system comprising a memory card interface" is substantially identical to limitation [1B.1]. For the reasons I discussed in §IV.B.3, the combination of Warner, Wakutsu, and Shavit discloses the first part of limitation [9A.2].

126. The second part of limitation [9A.2] ("*the wireless transmitter comprising a non-volatile memory card coupled to the memory card interface of the avionics system*") is identical to limitation [1D.2]. For the reasons I discussed in §IV.B.5, the combination of Warner, Wakutsu, and Shavit discloses the second part of limitation [9A.2].

3. "*Database*" Limitations [9B]-[9B.1]

127. Claim 9's "*database*" limitations recite substantially the same language as claim 1's "*database*" limitations. I note that because claim 1's preamble is limiting, the "*database*" must be part of the "*aircraft*." Claim 9's preamble however recites a "*system*" and therefore the "*database*" can be either in the aircraft or external to the aircraft.

Claim 1	Claim 9
[1C] a database in data communication with the sensor and the avionics system,	**[9B]** a database in data communication with the avionics system,
[1C.1] the database being configured to store information relating to a pilot flying the aircraft during flight and the flight performance of the aircraft during flight;	**[9B.1]** the database being configured to store information relating to a pilot flying the aircraft during flight and flight performance of the aircraft during flight;

128. Limitation [9B] overlaps with limitation [1C]. The primary differences are (1) claim 1 requires the "*database*" to be in the "*aircraft*" whereas claim 9 does not and (2) claim 1 requires the "*database*" to be in "*data communication with* ***the sensor and*** *the avionics system*" whereas claim 9 requires only that the "*database*" be in "*data communication with the avionics system*."

129. In §IV.B.4, I discussed that the combination of Warner, Wakutsu, and Shavit discloses limitation [1C]. Thus, for the same reasons I discussed in that section, the combination of Warner, Wakutsu, and Shavit discloses limitation [9B].

130. The language of limitation [1C.1] uses identical language to limitation [9B.1]. The sole difference between the limitations is that the "*database*" of claim 1 must be in the "*aircraft*." However, because I addressed both on-board and off-board database locations in my earlier analysis, for the same reasons I discussed in §IV.B.4, the combination of Warner, Wakutsu, and Shavit discloses limitation [9B.1].

4. "*Transceiver*" Limitations

131. Claim 9 recites a set of limitations directed to a "*transceiver*" which are identical to limitations in claim 1 as highlighted by the below table. Accordingly, for the reasons I discussed in §IV.B.6, the combination of Warner, Wakutsu, and Shavit discloses limitations [9C]-[9C.2] and [9F].

Claim 1	Claim 9
[1E] a transceiver comprising an input device	**[9C]** a transceiver comprising an input device;
[1E.1] the transceiver having a transceiver identity associated with pilot identification information	**[9C.1]** the transceiver having a transceiver identity associated with pilot identification information,
[1E.2] the transceiver being configured for receiving information relating to sensed flight performance from the wireless transmitter, for associating the thus received information with the pilot identification information associated with the transceiver identity, and for transmitting the received information with the thus associated pilot identification information to the database;	**[9C.2]** the transceiver being configured for receiving information relating to sensed flight performance from the wireless transmitter, for associating the thus received information with the pilot identification information associated with the transceiver identity, and for transmitting the received information with the thus associated pilot identification information to the database;
[1J] wherein the pilot identification information is entered directly into the input device of the transceiver	**[9F]** wherein the pilot identification information is entered directly into the input device of the transceiver.

5. "*Only Accessible*" [9D]

132. Limitation [9D] is identical to limitation [1H]. Therefore, for the reasons I discussed in §IV.B.7, the combination of Warner, Wakutsu, and Shavit discloses limitation [9D].

Claim 1	Claim 9

[1H] wherein the stored sensed flight performance is only accessible with the associated pilot identification information;	**[9D]** wherein the stored sensed flight performance is only accessible with the associated pilot identification information

6. Data Flow Limitation [9E]

133. As discussed in §§IV.B.2-3 above, in Warner, the flight performance data is collected by the QAR ("*avionics system*"). (*See* DJI-1005, 2:44-48; DJI-1006, 2:27-29.) The collected data "is automatically wirelessly transmitted" to the pilot tablet/EFB by means for wireless communication (WiFi module) ("*wireless transmitter*"). (DJI-1005, 3:21-25; DJI-1006, Abstract, claims 1, 30.) The data is then transmitted to the local "*database*" in the pilot tablet/EFB for storage. After the pilot tablet/EFB "is removed from the aircraft", the stored flight data is "automatically wirelessly downloaded" from the pilot tablet/EFB and stored in the ground-based "*database*." (DJI-1005, 3:25-31; DJI-1006, claims 1, 30; DJI-1008, ¶¶45, 56.)

134. For these reasons and the reasons discussed in §§IV.B.2-3, 5, the combination of Warner, Wakutsu, and Shavit discloses "*the wireless transmitter is configured to receive and transmit flight performance data from the avionics system to the transceiver, which in turn is transmitted to the database*" [9E].

D. Independent Claim 13

135. The combination of Warner, Wakutsu, and Shavit renders claim 13 obvious. I reproduce claim 13 below with labels added for ease of discussion.

> **[13P]** A method to monitor aircraft flight performance data, comprising:
>
> **[13A]** providing an avionics system comprising:
>
> > **[13A.1]** a sensor for sensing flight performance data; and
> >
> > **[13A.2]** a memory card interface,
>
> **[13B]** sensing flight performance data with the sensor;
>
> **[13C]** providing a wireless transmitter comprising:
>
> **[13C.1]** memory; and
>
> **[13C.2]** a non-volatile memory card configured for coupling to the memory card interface of the avionics system;
>
> **[13D]** transmitting the sensed flight performance data to a transceiver having a transceiver identity associated with pilot identification information;
>
> **[13E]** entering the pilot identification information directly on the transceiver;
>
> **[13F]** associating, by the transceiver, the sensed flight performance data received from the wireless transmitter with the pilot identification information associated with the transceiver identity;
>
> **[13G]** transmitting, by the transceiver, the received sensed flight performance data with the associated pilot identification information to a database; and

[13H] allowing access to the received sensed flight performance data only with the associated pilot identification information.

1. Preamble [13P]

136. As I discussed in §IV.B.1, the combination of Warner, Wakutsu, and Shavit discloses a system for "*flight performance monitoring*" [1P]. For the reasons discussed in §IV.B.1, the combination of Warner, Wakutsu, and Shavit also discloses a "*method to monitor aircraft flight performance data*" [13P].

2. "*Providing an avionics system*" [13A], "*Sensing*" [13B] and "*providing a wireless transmitter*" [13C]

137. Claim 13 recites limitations directed to "providing" two structural elements—"*an avionics system*" and "*a wireless transmitter*." As set forth in the following table, these limitations substantially overlap with limitations of claim 1.

Claim 1	Claim 13
[1A] a sensor configured to sense flight performance of the aircraft during flight;	**[13A]** providing an avionics system comprising:
[1B] an avionics system associated with the sensor, the avionics system comprising:	**[13A.1]** a sensor for sensing flight performance data; and
[1B.1] a memory card interface;	**[13A.2]** a memory card interface,
…	…
[1D.1] a wireless transmitter having memory,	**[13C]** providing a wireless transmitter comprising:

	[13C.1] memory; and
[1D.3] the wireless transmitter comprising a non-volatile memory card coupled to the memory card interface of the avionics system	**[13C.2]** a non-volatile memory card configured for coupling to the memory card interface of the avionics system;

138. As I discussed in §§IV.A.1, B.3, Warner describes a QAR (Quick Access Recorder) that performs the "automatic acquisition of data, analysis of the collected data, and preferably automatic wireless transmission of the collected data and/or analysis of the collected data to a destination for storage or analysis." (DJI-1005, 2:44-48; DJI-1006, 2:27-29.) Warner's apparatus is "*an avionics system*" because it is an electronic component used on an aircraft. Thus, Warner discloses "*providing an avionics system*" [13A].

139. I note that claim 13 recites that the "*avionics system*" comprises "*a sensor.*" However, the sole mention of a sensor in the specification merely says the sensor is associated with the avionics system: "During operation, a sensor 310 associated with avionics system 309 senses performance data of aircraft 311 during flight, which in turn is received, stored, and transmitted to transceiver 305." (DJI-1001, 3:6-10.) Figure 3 of the '950 patent reproduced below further shows the sensor coupled to the avionics system. Warner discloses a similar configuration of sensors and the avionics system.

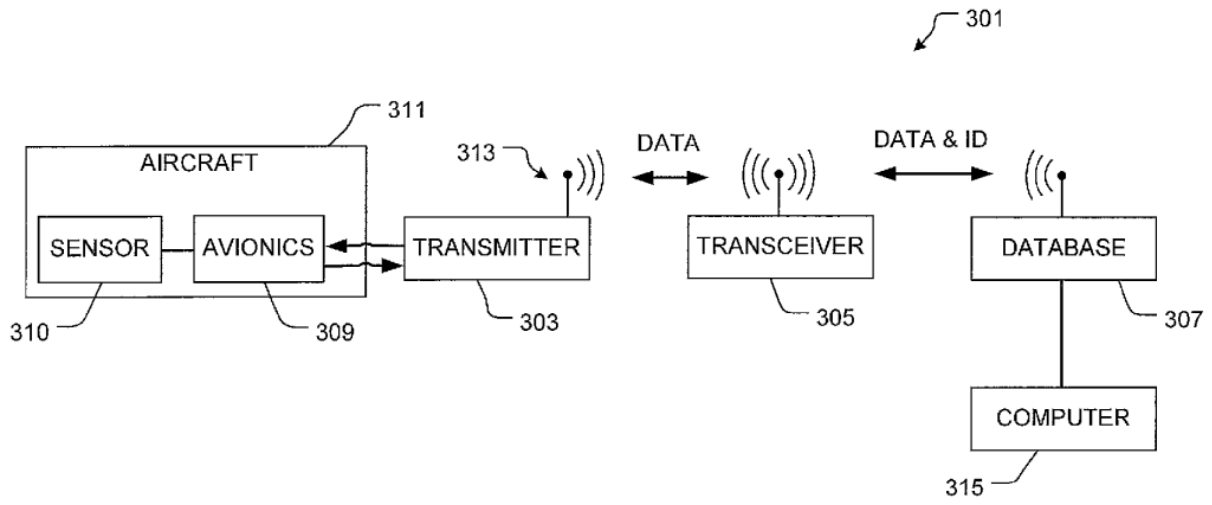

'950 Patent, Figure 3

140. A POSITA would understand analog and digital sensors that communicate data to the QAR are part of the aircraft's overall "*avionics system*." Additionally, Warner discloses "a process of collecting data" including "internal and external data that may include data acquired from an **analog or digital sensor**." (DJI-1005, 7:8-12; DJI-1006, 7:4-5.) This structure is consistent with the sole disclosure of a sensor in the '950 patent. Thus, the combination Warner, Wakutsu, and Shavit discloses "*providing an avionics system*" [13A] and "*a sensor for sensing flight performance data*" [13A.1].

141. As Warner repeatedly discloses, analog or digital sensor data is "collected" by the QAR. (DJI-1005, Abstract, 1:29-36, 2:53-59; DJI-1006, Abstract, 1:23-27, 2:32-3:4.) This collected sensor data is generated by the sensor.

Thus, the combination of Warner, Wakutsu, and Shavit discloses "*sensing flight performance data with the sensor*" [13B].

142. As I discussed in §IV.B.3, the combination of Warner, Wakutsu, and Shavit discloses that the avionics system includes a "*memory card interface*" [13A.2].

143. As discussed in §§IV.C.2, IV.B.5, the combination of Warner, Wakutsu, and Shavit discloses "*a wireless transmitter having memory*" [9A] and "*comprising a non-volatile memory card coupled to the memory card interface of the avionics system*" [9A.2]. For the same reasons as discussed in §§IV.C.2, IV.B.5, the combination of Warner, Wakutsu, and Shavit discloses "*providing a wireless transmitter comprising: memory; and a non-volatile memory card configured for coupling to the memory card interface of the avionics system*" [13C], [13C.1], [13C.2].

3. "*Transmitting the sensed flight performance data to a transceiver …*" [13D]

144. As I discussed in §IV.C.6, the combination of Warner, Wakutsu, and Shavit discloses "*the wireless transmitter is configured to receive and transmit flight performance data from the avionics system to the transceiver*" [9E]. As I discussed in §§IV.C.4, IV.B.6.c, the combination of Warner, Wakutsu, and Shavit discloses "*the transceiver having a transceiver identity associated with pilot*

identification information" [9C.1]. For the same reasons as discussed in §§IV.C.6, IV.C.4, IV.B.6, the combination of Warner, Wakutsu, and Shavit discloses "*transmitting the sensed flight performance data to a transceiver having a transceiver identity associated with pilot identification information*" [13D].

4. "*Entering the pilot identification information directly on the transceiver*" [13E]

145. Limitation [13E] is substantially the same as limitation [9F]. Accordingly, for the reasons I discussed in §§IV.C.4, IV.B.6.b, the combination of Warner, Wakutsu, and Shavit discloses "*entering the pilot identification information directly on the transceiver*" [13E].

5. "*Associating, by the transceiver, the sensed flight performance data …*" [13F]

146. As I discussed in §§IV.C.4, IV.B.6.d, the combination of Warner, Wakutsu, and Shavit discloses "*the transceiver* [is] *configured … for associating the thus received information with the pilot identification information associated with the transceiver identity*" [9C.2]. For the reasons discussed in §§IV.C.4, IV.B.6.d, the combination of Warner, Wakutsu, and Shavit discloses "*associating, by the transceiver, the sensed flight performance data received from the wireless transmitter with the pilot identification information associated with the transceiver identity*" [13F].

6. "*Transmitting, by the transceiver, the received sensed flight performance data …*" [13G]

147. As discussed in §§IV.C.4, IV.B.6.d, the combination of Warner, Wakutsu, and Shavit discloses "*the transceiver* [is] *configured … for transmitting the received information with the thus associated pilot identification information to the database*" [9C.2]. For the reasons discussed in §§IV.C.4, IV.B.6.d, the combination of Warner, Wakutsu, and Shavit discloses "*transmitting, by the transceiver, the received sensed flight performance data with the associated pilot identification information to a database*" [13G].

7. "*Allowing access to the received sensed flight performance data …*" [13H]

148. Limitation [13H] is substantially the same as limitation [9D]. Accordingly, for the reasons I discussed in §§IV.C.5, IV.B.7, the combination of Warner, Wakutsu, and Shavit discloses "*allowing access to the received sensed flight performance data only with the associated pilot identification information*" [13H].

E. Dependent Claims

1. Claims 2, 3, and 12

149. Claims 3 and 12, reproduced below, recite substantially identical subject matter. Claim 3 depends from claim 2 (reproduced below) which merely

recites that the "*transceiver is portable*." The combination of Warner, Wakutsu, and Shavit renders these claims obvious.

2. The aircraft of claim 1, wherein the transceiver is portable.

3. The aircraft of claim 2, wherein the transceiver is a smartphone.

12. The system of claim 9, wherein the transceiver is a smartphone.

150. As I discussed in §§IV.A.4, IV.B.6.a, the pilot tablet/EFB in Warner that runs Shavit's data logger application includes a "*transceiver*." Warner repeatedly refers to this device as "portable." (DJI-1005, Title ("System, Methodology, and Process for Wireless Transmission of Sensor Data Onboard an Aircraft to a **Portable Electronic Device**"), Abstract, 1:29-36; DJI-1006, Title ("System, Methodology, and Process for Wireless Acquisition of Sensor Data Onboard an Aircraft to a Portable Computer"), Abstract, 1:23-27.) Warner further discloses that its pilot tablet/EFB "is carried onto and off of the aircraft by the pilot" further confirming that the "*transceiver is portable*." (DJI-1005, Abstract; DJI-1006, Abstract.)

151. Warner does not explicitly teach that the portable electronic device is a "smartphone." However, Shavit teaches that in an embodiment its data logger is "a software application on a portable smartphone, such as an iPhone, which is carried onboard an aircraft during flight." (DJI-1008, ¶45.) A POSITA would have

been motivated to implement the data logger in the combination as a smartphone as suggested by Shavit. Use of smartphones was common by 2013 and as such would not have required any special aviation or other training to operate. A POSITA would have understood that the use of a smartphone would be more convenient for the pilot, because it would eliminate the need for a special purpose device for data logging. Smartphones were also lightweight and fit within a pocket or bag, i.e., easily portable by the pilot. Additionally, a POSITA would have understood that the availability of over the air updates for smartphones would have simplified updates and maintenance of the data logger application, further motivating the combination. Thus, the combination of Warner, Wakutsu, and Shavit discloses "*the transceiver is a smartphone*" [3]/[12].

2. Claims 4 and 5

152. Claims 4 and 5, reproduced below, are directed to data uploaded to the avionics system. The combination of Warner, Wakutsu, and Shavit renders these claims obvious.

> 4. The aircraft of claim 1, wherein the transceiver is configured to upload data to the avionics system via the wireless transmitter.
>
> 5. The aircraft of claim 4, wherein the uploaded data is a flight planning data.

153. Shavit discloses that "a flight plan [is] entered into the avionics system by the pilot." (Shavit, ¶50.) Warner teaches that the pilot tablet/EFB "has access to flight plan … in the pre-flight stage." (DJI-1005, 6:14-15, Figure 4; DJI-1006, 5:31-32, Figure 4.) Warner's Figure 4 further shows transmission of flight data from the pilot tablet/EFB to a recording device (MFDAU) via the wireless means (WiFi module). The MFDAU performs the same role in the data collection and transfer to an EFB as the QAR. This teaching is consistent with the FAA guidelines for EFBs which set forth that an EFB must be able to host Type B software applications which include "master flight plan/updates." (DJI-1015, 2, Appendix 2.) Based on these teachings, a POSITA would have been motivated to upload the flight plan from the pilot tablet/EFB to the avionics system of the aircraft using the wireless capabilities of the wireless tablet/EFB.

154. The combination of Warner, Wakutsu, and Shavit therefore teaches "*the transceiver is configured to upload data to the avionics system via the wireless transmitter*" [4] and "*the uploaded data is a flight planning data*" [5].

3. Claims 7, 10, and 16

155. The combination of Warner, Wakutsu, and Shavit renders claims 7 and 10 (reproduced below) obvious.

> 7. The aircraft of claim 1, wherein the wireless transmitter removably attaches to the avionics system, the non-volatile memory card being an SD card.
>
> 10. The system of claim 9, wherein the wireless transmitter removably attaches to the avionics system.
>
> 16. The method of claim 13, wherein the non-volatile memory card is an SD card.

156. As I discussed in §IV.B.5, Wakutsu's WiFi SD card is the recited "*wireless transmitter*" and a "*non-volatile memory card.*" Wakutsu's memory card 11 "is also called **an SD card**." (DJI-1007, 9:21-22.) As further discussed in §§IV.B.5, IV.C.2, IV.D.2, the WiFi SD card is inserted into a memory card slot of the QAR ("*avionics system*"). Accordingly, the combination of Warner, Wakutsu, and Shavit discloses "*the wireless transmitter removably attaches to the avionics system, the non-volatile memory card being an SD card*" [7], "*the wireless transmitter removably attaches to the avionics system*" [10], and "*the non-volatile memory card is an SD card*" [16].

4. Claim 8

157. Claim 8 is reproduced below:

> 8. The aircraft of claim 1, wherein the transceiver is configured to receive and store aircraft flight performance data.

158. As I discussed in §IV.B.6.d, the combination of Warner, Wakutsu, and Shavit discloses "*the transceiver being configured for receiving information relating to sensed flight performance from the wireless transmitter*." Thus, the combination discloses "*the transceiver is configured to receive … aircraft flight performance data*."

159. Warner's EBF/pilot tablet "contain[s] a governing application which drives the logic for WiFi connection, security, file structure, and data processing including the option to apply high level encryption to a specified data stream." (DJI-1005, 10:25-28, DJI-1006, 11:11-13.) This "governing application" of the pilot tablet/EFB drives the logic that stores the received flight data in the "*database*" of the pilot tablet/EFB.

160. The combination of Warner, Wakutsu, and Shavit therefore discloses "*the transceiver is configured to receive and store aircraft flight performance data*" [8].

5. Claim 11

161. Claim 11 is reproduced below:

> 11. The system of claim 10, wherein the transceiver is configured to wirelessly receive information from the wireless transmitter.

162. As I discussed in §IV.C.4, the combination of Warner, Wakutsu, and Shavit discloses "*the transceiver being configured for receiving information*

relating to sensed flight performance from the wireless transmitter." As I discussed in this section, the WiFi SD card as taught by Wakutsu (and which were used by my own student project teams before the '950 patent) wirelessly transmits the acquired data from the QAR to the pilot tablet/EFB. (DJI-1005, 5:45-47; DJI-1006, 5:7-9.) Accordingly, the combination of Warner, Wakutsu, and Shavit discloses "*the transceiver is configured to wirelessly receive information from the wireless transmitter.*"

6. Claim 14

163. Claim 14 is reproduced below:

> 14. The method of claim 13, wherein the transmitting by the transceiver of the associated sensed flight performance data and pilot identification information includes wirelessly transmitting the associated sensed flight performance data and pilot identification information to the database.

Claim 14 narrows claim 13 by merely specifying that the transmission of data from the transceiver to the database is performed using wireless communication. In Warner, the collected data "is automatically wirelessly transmitted to the EFB or other portable electronic device carried by the pilot or other crew member onto the aircraft, then automatically **wirelessly downloaded** from the EFB or other portable electronic device after the EFB or other portable electronic device is removed from the aircraft by the pilot or other crew member,

typically when the portable electronic device connects to a network after it is removed from the aircraft." (DJI-1005, 3:21-29, 7:49-55; DJI-1006, 7:29-8:1.) Shavit similarly discloses the device running the data logger application provides a bi-directional data-link, implemented using **wireless data communication**, to ground-based server 203. (DJI-1008, ¶45.)

164. Thus, the combination of Warner, Wakutsu, and Shavit discloses "*transmitting by the transceiver of the associated sensed flight performance data and pilot identification information includes wirelessly transmitting the associated sensed flight performance data and pilot identification information to the database*" [14].

V. GROUND 2: Combination of Warner, Wakutsu, Shavit, and Greubel renders claims 1-5, 7-14, and 16 obvious.

165. As I discussed in §IV, the combination of Warner, Wakutsu, and Shavit discloses every limitation of independent claims 1, 9 and 13 and their respective dependent claims 2-5, 7-8, 10-12, 14 and 16. The independent claims each recite the limitation: "*transceiver having a transceiver identity associated with pilot identification information*" [1E.2]/[9C.1]/[13D]. The independent claims do not (1) specify or restrict the component performing the association of the transceiver identity with the pilot identification information or (2) specify when such an association occurs. Should an argument be made that the limitation

requires association of the transceiver identity with pilot identification information after the flight performance data is transmitted to the database[6] so pilot privacy is maintained during data transmission, I disagree with this interpretation of the claim. This interpretation is not supported anywhere in the independent claims. Instead, the independent claims recite that the flight performance data received by the transceiver is transmitted to the database "***with*** *the thus associated pilot identification information*" [1E.2]/[9C.1]/[13D]. As recited in the claims, no confidentiality exists for the pilot because the pilot's identification information is included in the same message as the aircraft performance data. Regardless, should this interpretation be applied, Greubel discloses associating vehicle operator identification information with a transceiver identifier in a remote database.

A. Overview of the Combination

1. Greubel

166. Greubel explains that "vehicle manufacturers are required to install on-board diagnostic (e.g., OBD-II) systems on light-duty automobiles and trucks." (DJI-1009, 1:6-8.) These systems "monitor a vehicle's electrical and mechanical systems and generate data that can be processed by a vehicle's engine control unit (ECU) to detect any malfunction or deterioration in the vehicle's performance."

[6] PO argued this interpretation during prosecution, as I discussed in §III.C.

(DJI-1009, 1:8-12.) However, "these systems do not associate collected vehicle data with a particular driver." (DJI-1009, 1:47-49.)

167. Greubel therefore describes systems and methods for using a wireless device "to uniquely identify drivers of fleet vehicles." (DJI-1009, 1:55-57.) Greubel's network, illustrated in Figure 1 below, includes portable device 110, vehicle telematics unit 120, user device 130, access network 140, application server 160, and service database 170. In operation, a user "solicit[s] a MAC address for a portable device 110 associated with a particular driver." (DJI-1009, 7:14-16.) The MAC address "may be manually obtained by accessing a settings screen on portable device 110 or by viewing the MAC address from a physical location (e.g., inside a battery cover) on portable device 110." (DJI-1009, 7:16-19.) Alternatively, user device 130 may discover the MAC address using information available over the wireless connection. (*See* DJI-1009, 7:20-25.)

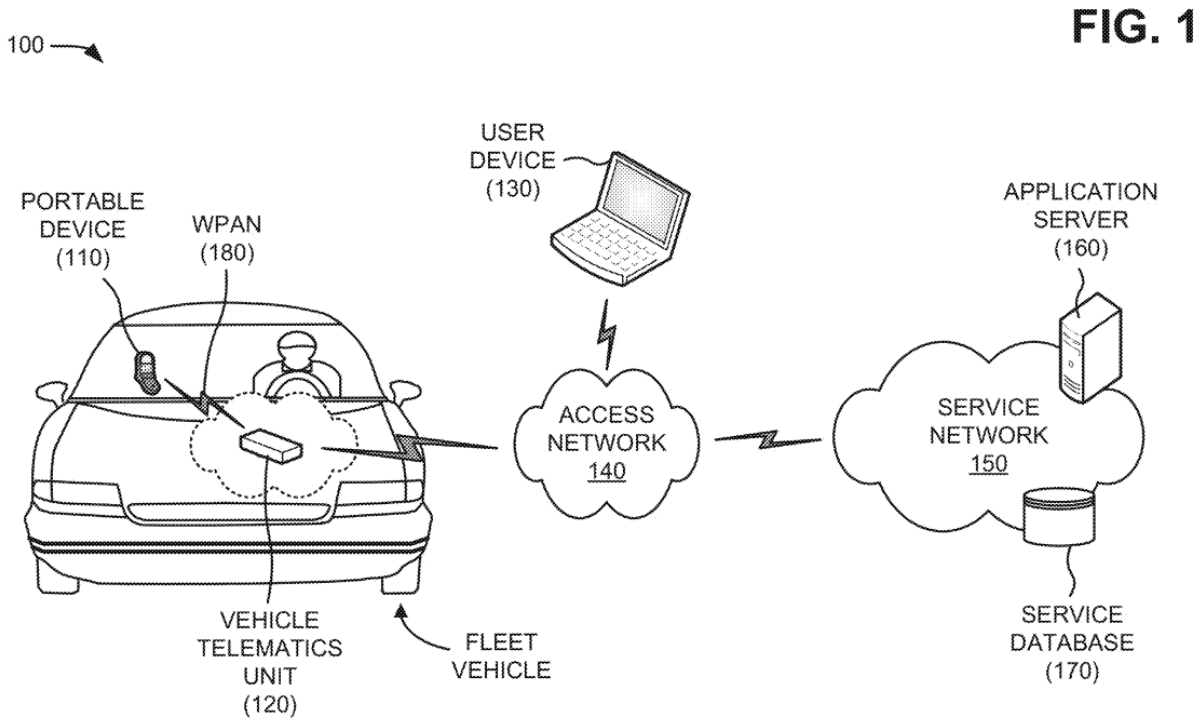

Greubel, Figure 1

168. A driver identifier (ID) is "associated with the MAC address as a single data record." (DJI-1009, 7:25-26.) The driver identifier includes, for example, "a driver name (or portion thereof), an employee number, or another unique identifier." (DJI-1009, 7:26-29.) The user device sends the driver identifier and device MAC address to service network 150 which stores the information in service database 170. (DJI-1009, 7:30-35.)

169. Greubel's application server 160, illustrated in Figure 1 above, provides "a web page to manage registration and storage of MAC addresses (or other unique identifiers) that are associated with a portable device 110 and/or a

fleet vehicle driver." (DJI-1009, 4:12-16.) For example, application server 160 provides a web-based application "to submit the MAC addresses of portable devices and the vehicle driver identifiers." (DJI-1009, 4:17-21.)

170. In operation, when a driver carries a portable device onto a vehicle, vehicle telematics unit 120 retrieves the MAC address 440 from the portable device. (DJI-1009, 7:52-58.) The vehicle telematics unit 120 also receives data generated by vehicle sensors and/or a vehicle electronic control unit (ECU). (DJI-1009, 2:65-3:1.) Vehicle telematics unit 120 then "transmit[s] MAC address 440, along with an identifier of vehicle telematics unit 120 and/or vehicle identifier 430, via cellular, satellite, or WAN network link." (DJI-1009, 7:66-8:3.) Vehicle telematics unit 120 also transmits the received data to the service network which includes application server 160, service database 170, and other devices. (*See* DJI-1009, 3:3-9, 3:49-52.) The application server 160 subsequently "match[es] the MAC address to a driver identifier." (DJI-1009, 8:11-12.) Application server 160 "log[s] the MAC address and/or driver identifier in service database 170 with additional vehicle data." (DJI-1009, 8:13-15.) "For example, vehicle activity, such as speed, acceleration, deceleration, routes, gas mileage, etc., may be logged to the particular driver for as long as the driver is in the vehicle." (DJI-1009, 8:15-18.)

2. Motivation to Combine

171. A POSITA would have been motivated to combine Greubel's teachings regarding associating a MAC address with the identity of a vehicle operator as a selectable mode of operation with the combined system of Warner, Wakutsu, and Shavit. For example, a POSITA would have been motivated to add an option to associate the MAC address of the pilot tablet/EFB carried by the pilot with the pilot identification information in the ground-based server in the manner taught by Greubel. When this option is selected, data is transmitted from the pilot tablet/EFB to the ground-based server with the pilot identification information removed or obscured (e.g., encrypted). A database at the ground-based server which stores MAC address/pilot identifier associations is subsequently queried, to associate the pilot information with the received flight performance data, as taught by Greubel. The addition of this mode of operation allows a pilot, airline, or other entity to select whether to provide or obscure pilot information in the messages sent from the aircraft.

172. A POSITA would have been motivated to make the above combination to meet confidentiality goals set forth by the FAA at part of the FOQA program. In 2004, the FAA released an advisory circular that "provides guidance on one means, but not necessarily the only means, of developing, implementing, and operating a voluntary Flight Operational Quality Assurance

(FOQA) program that is acceptable to the Federal Aviation Administration (FAA)." (DJI-1018, 1.) "The fundamental objective of this new FAA/pilot/carrier partnership is to allow all three parties to identify and reduce or eliminate safety risks, as well as minimize deviations from the regulations." (*Id.*) A "cornerstone" of the FOQA program "is the understanding that aggregate data that is provided to the FAA will be kept confidential and the identity of reporting pilots or airlines will remain anonymous as allowed by law." (*Id.*) Specifically, the FAA states that "[d]ata that could be employed to determine flight crewmember identity are removed from view in the electronic record as part of the initial processing of the airborne data." (DJI-1018, 8; *see also* DJI-1024, ¶¶14-15.) The only person with the ability to associate the flight data with an individual is a "gatekeeper" designated by the pilot union's flight safety team. (DJI-1018, 4, 8, 31; DJI-1024, ¶15.) A POSITA would have therefore been motivated to make the above combination to provide improved confidentiality and privacy of sensitive pilot data. A POSITA would have further recognized that enhanced pilot confidentiality would improve pilot perception of FOQA which is a voluntary safety program and would increase adoption of the program.

173. A POSITA would have been motivated to combine Greubel with Warner, Wakutsu and Shavit because Greubel is in the same general field of endeavor as the '950 patent—monitoring, analysis, and feedback of the

performance of a vehicle and its operator. Greubel is also reasonably pertinent to the problem addressed in the ’950 patent. The claims of the ’950 patent are directed to improved techniques for monitoring and analyzing flight performance data. In one contemplated use of the system, a computer coupled to the database, “process[es] the data stored in database 307 and then transmit[s] the analysis directly to the pilot on transceiver 305.” (DJI-1001, 4:54-59.) This analysis could be “through use of a scoring system such as a safety score, e.g., “Your Safety Score for this flight was an A; no negative conditions were found.” (DJI-1001, 4:59-64.) While the claims of the '950 patent are directed to aircraft and aircraft systems, the specification makes it clear that the alleged invention is applicable to other types of vehicles, “It will be appreciated that the features of system 301 discussed herein are hereby incorporated in aircraft 101, 201, and other similarly suitable aircraft and / or vehicles." (DJI-1001, 3:1-41.)

174. Greubel’s system, used in fleet management, similarly associates vehicle data with the driver. (*See, e.g.,* DJI-1009, 8:11-19.) These fleet management systems are designed to evaluate driver performance. U.S. Patent 8,626,568 to Warkentin, et al (“Warkentin”) discloses one such fleet management system. (*See* DJI-1025.) Warkentin explains that a “number of commercial companies and government institutions maintain a fleet of vehicles and have an interest in keeping track of the vehicles and shipments, as well as the performance

and well-being of their drivers." (DJI-1025, 1:13-16.) "These parties frequently equip their fleet vehicles with devices configured to track the vehicles' geographic locations, speeds, headings, cargo temperature, engine performance parameters, and other data." (DJI-1025, 1:16-20.) Such information is used, for example, "to evaluate driver performance." (DJI-1025, 1:20-22.)

175. Like air travel, regulatory agencies associated with these vehicle fleets, have an interest in obtaining vehicle and individual trip data and monitoring drivers to improve safety. Warkentin explains that "[s]ome regulatory agencies also have an interest in fleet vehicle information, such as the number of miles a delivery vehicle has traveled since its last safety inspection, or the number of hours a driver has been on duty since he or she last rested." (DJI-1025, 1:23-27.) U.S. Publication 2012/0194679 to Nehowig, et al ("Nehowig") also discloses a fleet management system. Nehowig explains that "[f]ederal and state laws dictate the amount of time that a particular driver can operate between rest breaks, and logs must be kept to indicate compliance in this area." (DJI-1026, ¶65.) Accordingly, like the '950 patent, these fleet management systems record vehicle data, associate the vehicle data with driver identity information, and provide the information to databases for analysis. (*See* DJI-1025, Abstract; DJI-1026, Abstract.)

176. The combination of Greubel with the Warner, Wakutsu, and Shavit is simply the use of a known technique (associating a MAC address with a vehicle

operator) to improve similar devices (the flight performance monitoring system of Warner, Wakutsu, and Shavit) in the same way (associating pilot information with device identifier). The combination also applies a known technique (associating pilot information with device identifier) to a known device (a flight performance monitoring system). Applying the known technique would have resulted in an improved system that provided added confidentiality for pilots, as discussed above. The results of the combination would have been predictable and a POSITA would have had a reasonable expectation of success because the combination merely stores the MAC address and vehicle operator information in a database, a concept which was well-known before the ’950 patent.

B. Independent Claims

177. The combination of Warner, Wakutsu, Shavit, and Greubel discloses "*the transceiver having a transceiver identity associated with pilot identification information*" limitation of the independent claims as discussed below. For the reasons I discussed in §§IV.B.-D, the combination of Warner, Wakutsu, Shavit, and Greubel discloses the remaining limitations of the independent claims.

178. As I discussed in §IV.B.6.c, a MAC address is an identifier assigned to a networking device, such as the pilot tablet/EFB in the combination of Warner, Wakutsu, Shavit, and Greubel, and is therefore a "*transceiver identity*." In the combination that I discussed above, the MAC address of the pilot tablet/EFB is

stored in a database that associates the pilot with the pilot tablet/EFB through the MAC address, as taught by Greubel. (*See* DJI-1009, 1:57-60.) Subsequently, when data is received from the pilot tablet/EFB, the database "match[es] the MAC address" to the pilot identifier and logs the MAC address and/or pilot identifier in the database with the flight data, as taught by Greubel. (*See* DJI-1009, 8:11-15.) That is, the transceiver identity is associated with the pilot identification information.

179. Thus, the combination of Warner, Wakutsu, Shavit and Greubel discloses the "*transceiver having a transceiver identity associated with pilot identification information*" [1E.2]/[9C.2]/[13D] and the other limitations of the independent claims.

C. Dependent Claims

180. For the above reasons, and the reasons I discussed in §§IV.B-E, the combination of Warner, Wakutsu, Shavit, and Greubel renders dependent claims 2-5, 7-8, 10-12, 14 and 16 obvious.

VI. GROUND 3: The combination of Uczekaj and Jiang renders claims 1-5, 8-9, 11-14, and 16 obvious.

A. Overview of the Combination

1. Overview of Uczekaj

181. Uczekaj discloses systems and methods for FAA-certified avionics devices to safely interface with non-certified mobile telecommunications devices

before, during, and after flight. (DJI-1010, Abstract). Uczekaj explains that the FAA "establishes, via regulations, certain minimum standards and requirements that must be satisfied by avionics devices, systems and equipment, particularly when the avionics device is essential or critical to flight safety." (DJI-1010, 1:23-27.) These devices are referred to as "FAA-certified devices." Uczekaj then notes that "[t]hird-party software developers have developed, and are expected to continually develop newer, software applications (also known as 'apps') for non-certified devices to enhance the flight experience." (DJI-1010, 1:42-45.) Exemplary non-certified devices include, but are not limited to, "cell phones, smart phones, BLACKBERRY mobile communications devices, IPADs, IPODs, IPHONEs, laptops, table PCs, and similar mobile computing platforms." (DJI-1010, 1:50-54.) Because the FAA "strictly regulates interconnectivity of flight systems to ensure certain minimum standards of flight safety", non-certified devices "and their convenient software applications are unavailable for direct interfacing with FAA-certified devices without compromising the integrity, reliability, and certification of the FAA-certified devices." (DJI-1010, 1:60-65.)

182. Uczekaj therefore "relates to methods and systems to interface between FAA-certified and non-certified devices, systems, and equipment." (DJI-1010, 1:19-22.) Uczekaj "provides an electronic gateway interface module designed to provide telecommunications connectivity between cockpit avionics

and mobile devices (i.e., between FAA-certified and non-certified devices).” (DJI-1010, 4:43-47.) The gateway, illustrated in Figure 1 below, “provides a hardwire telecommunications link to FAA-certified devices” and “a wireless link to non-certified devices via WiFi (IEEE 802.11a/b/g/n).” (DJI-1010, 4:57-59.) Uczekaj’s gateway “may be a standalone device or part of an FAA-certified device.” (DJI-1010, 4:64-67.)

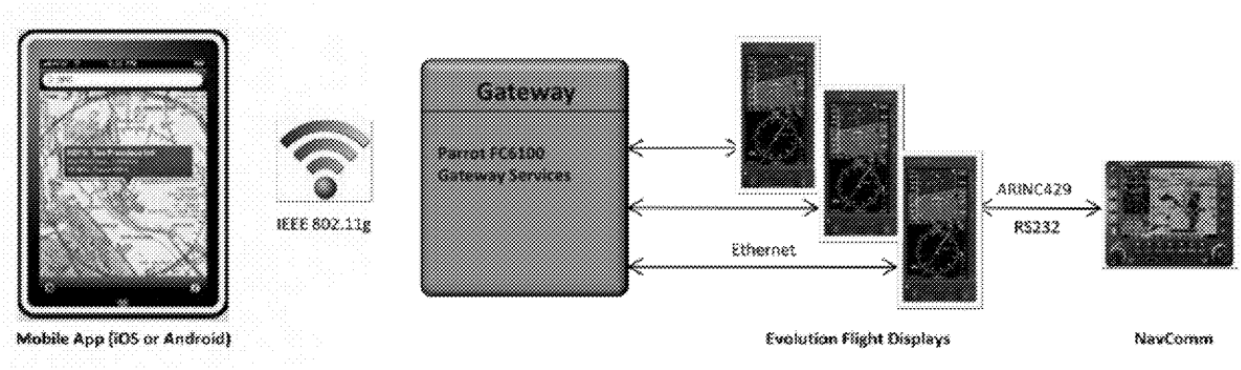

Uczekaj, Figure 1

183. The gateway, illustrated in Figure 4 below, “includes a communication module that provides in-aircraft telecommunications connectivity” via WiFi, 3G/4G cellular, Iridium satellite, or USB. (DJI-1010, 6:25-30.) The gateway further includes a processor and memory, with an optional additional memory interface (e.g., a memory card). (DJI-1010, 6:34-37.) In an exemplary embodiment, “the gateway includes two SD card slots for internal data storage.” (DJI-1010, 7:21-22.) One of the cards “store[s] application data, flight logs, data recorder, information, and entertainment media.” (DJI-1010, 7:24-26.)

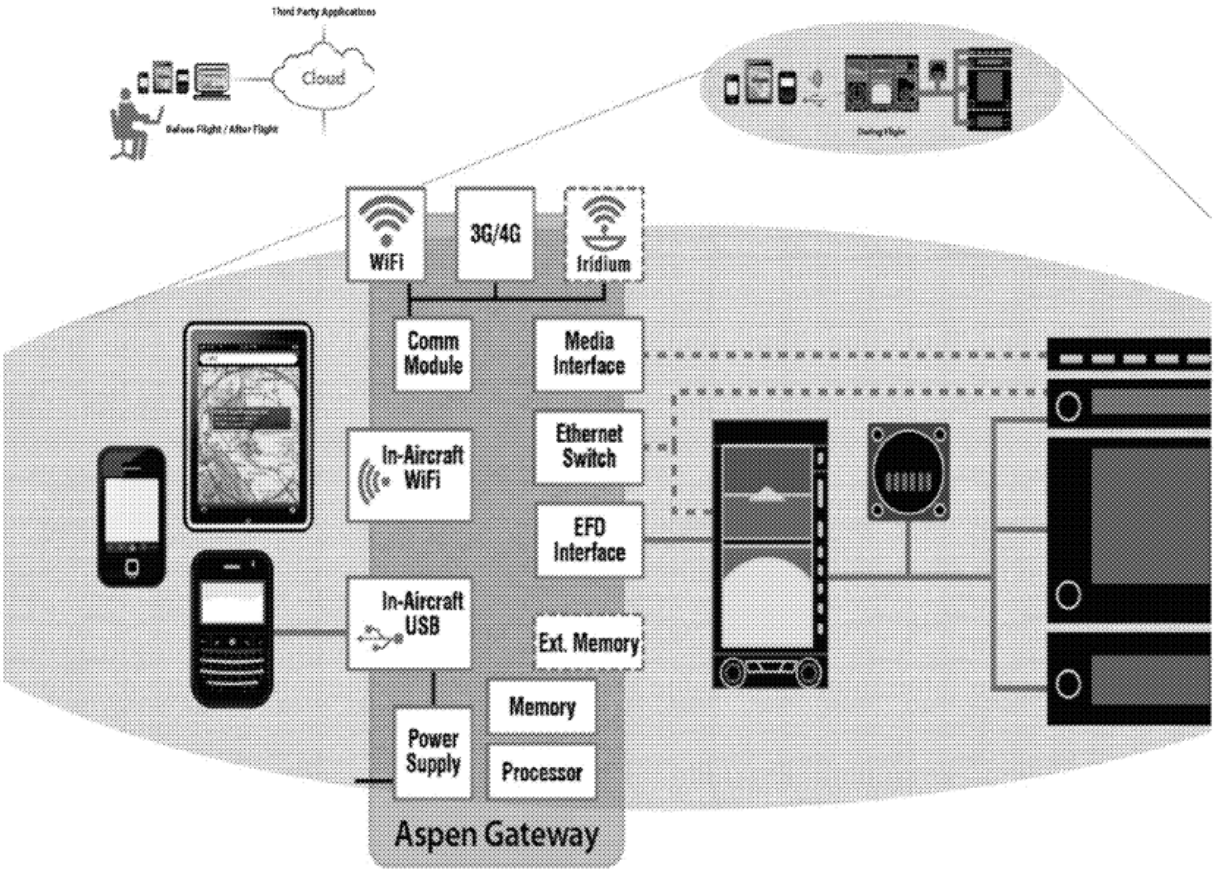

Figure 4

Uczekaj, Figure 4

184. The gateway further "connects directly to ASPEN's EFD[7] multi-function flight display or other similar device via an Ethernet connection" and "other FAA-certified devices are connected to the EFD." (DJI-1010, 6:40-43.) Additional FAA-certified devices "are optionally directly connected to the gateway

[7] The EFD (Evolution Flight Display) is a Multi-function Flight Display (MFD) available from ASPEN AVIONICS.

via Ethernet, ARINC429 (RS232), or other media interface." (DJI-1010, 6:45-49.) The ARINC429 interface allows the gateway "to interface directly with legacy avionics equipment, such as air data, inertial, navigation, flight control, or other similar aircraft computing systems." (DJI-1010, 7:32-37.)

185. The non-certified device and gateway provide many applications for use before, during and after flight as shown in Figure 2 below. Before a flight, a pilot uses non-certified devices to, for example, "check the latest weather developments, plan a flight, finalize a flight route, file and obtain clearance, prepare and update charts and flight databases, plan for destination logistics, notify others of upcoming flight, confirm pilot and aircraft airworthiness, confirm aircraft availability, and plan for passenger comfort." (DJI-1010, 5:23-30.) During the flight, the pilot uses non-certified devices to, for example, "load flight plan and clearance to the avionics systems, tune radios and communicate with others, review and perform flight procedures, manage charts and flight databases, monitor fuel and engine operations, avoid weather, terrain, and obstacles, execute checklist, report and track position, communicate with people on the ground, and keep passengers comfortable." (DJI-1010, 5:23-30.) And after a flight or between flights, the pilot uses non-certified devices to "close the flight plan, flight log entry, notify others of arrival, arrange for ground transportation, review flight and debrief, and report any incidents" and "review flight trends, share experience,

analyze data, maintain aircraft, maintain and enhance skills, maintain pilot status, and critique instructor." (DJI-1010, 5:43-48.) I discuss two of these applications in further detail below: Flight Planning and Pilot's Logbook.

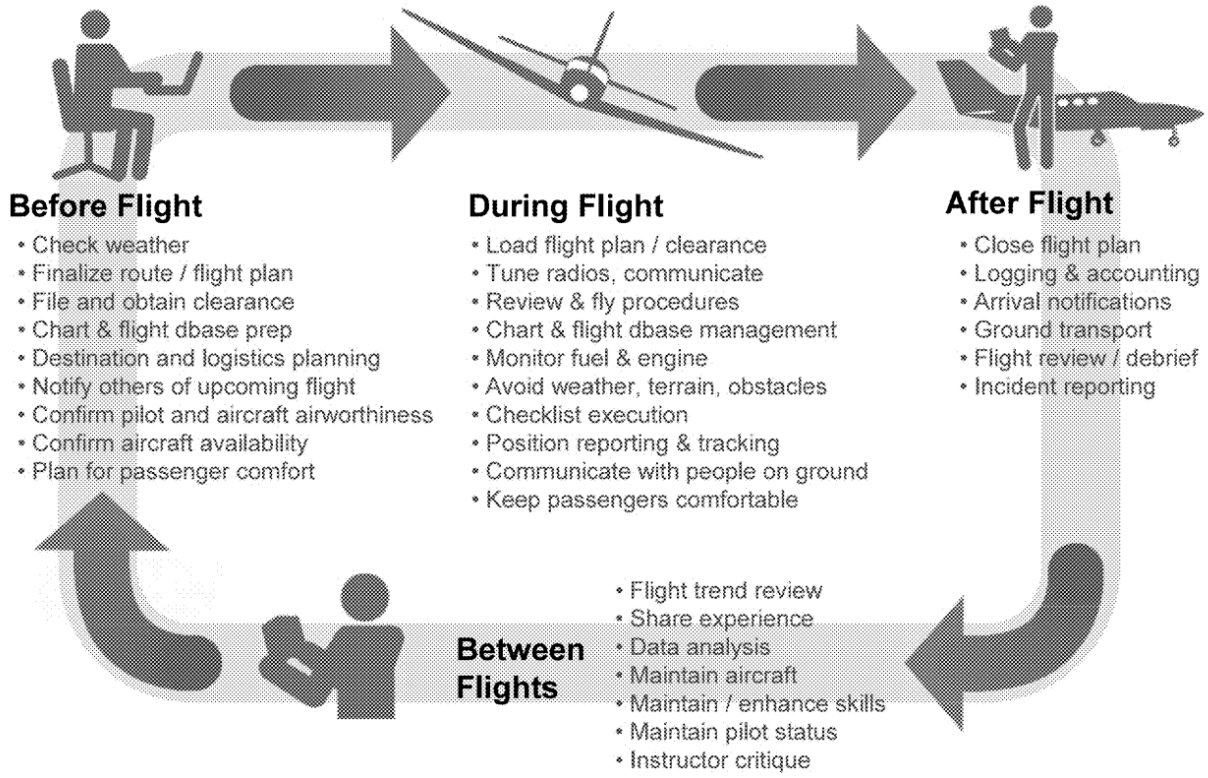

Uczekaj, Figure 2

186. With the flight planning application, illustrated in Figure 9 below, "a pilot creates or updates a flight plan on a mobile, non-certified device." (DJI-1010, 8:23-24.) The non-certified device subsequently "connects to the gateway wirelessly, via WiFi or BlueTooth." (DJI-1010, 8:25-26.) The software application on the non-certified device "sends a request to the gateway indicating a new (or updated) flight plan (this can be initiated automatically by the software application,

or manually by input from the pilot)." (DJI-1010, 8:28-31.) The gateway "processes the planned update request for the non-certified device and forwards the request to the FAA-certified device." (DJI-1010, 8:31-34.) Before any changes take effect, the FAA-certified device "requests user acknowledgement and confirmation." (DJI-1010, 8:37-39.) After acknowledgement, the Navigation system is updated with the new or updated flight plan. (DJI-1010, 8:39-41.)

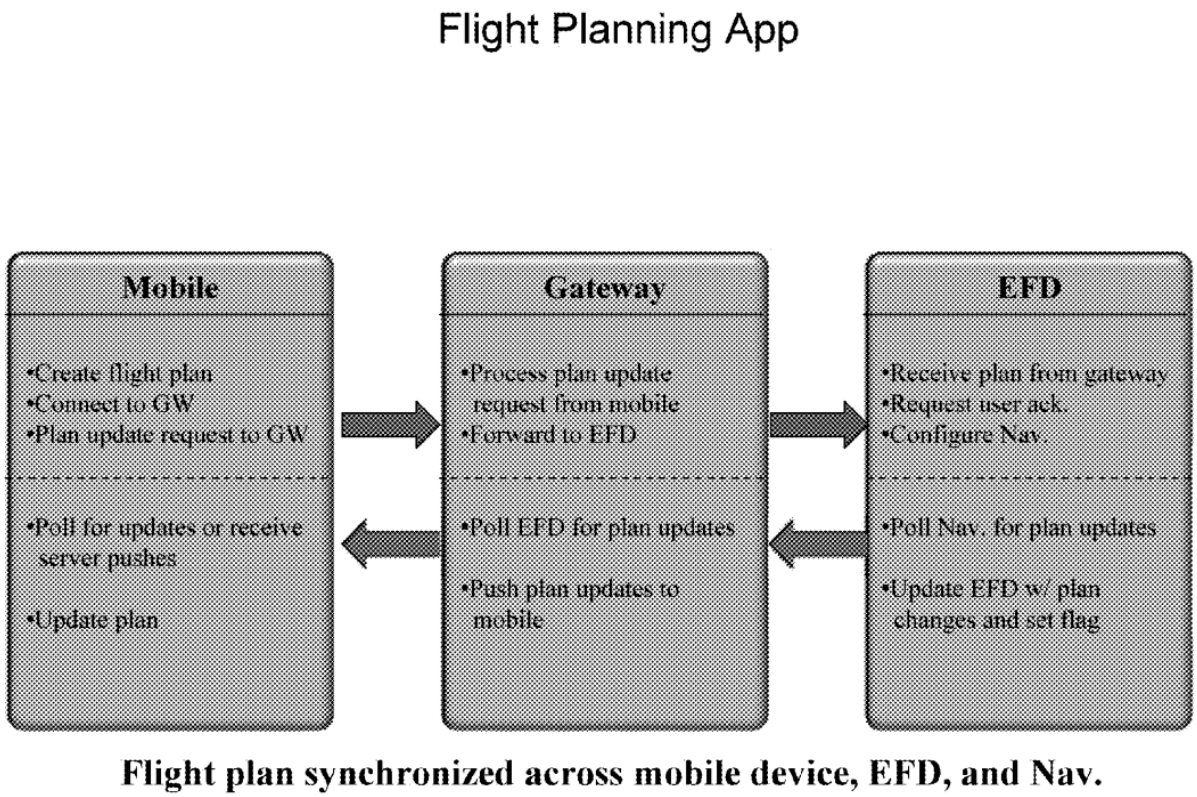

Uczekaj, Figure 9

187. With the flight logbook application illustrated in Figure 13 below, "a pilot initiates logging via a software application on a non-certified device." (DJI-1010, 10:56-57.) The logging application "records pilot hours and aircraft

performance data." (DJI-1010, 10:62-63.) During operation, the "application sends a request to the gateway to initiate logging." (DJI-1010, 10:63-64.) "The gateway processes the requests and requests aircraft and/or engine status." (DJI-1010, 10:64-66.) The certified device then "requests and seeks confirmation from the pilot." (DJI-1010, 10:66-11:1.) After acknowledgement, the gateway "stores the log information on an external memory card or forwards it on to the non-certified device for storage." (DJI-1010, 11:4-6.)

Logbook App

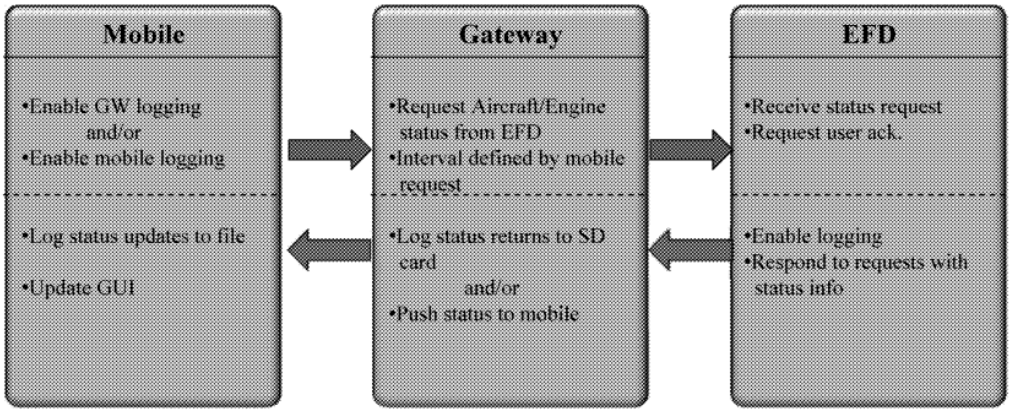

Figure 13

Uczekaj, Figure 13

2. Jiang

188. Jiang "relates to systems for collecting, processing, and analyzing data generated during the flight of an aircraft, and more specifically, to a data processing system for collecting flight data and producing pilot log reports from that data." (DJI-1011, 1:6-10.)

189. Jiang explains that a "pilot log is a document used to record information concerning an aircraft flight for the purpose of tracking pilot hours and performance, and assisting in the identification of problems with the aircraft." (DJI-1011, 1:13-16.) After every flight, "the pilot reports to a ground station and someone at the station fills in the Log Book based on the pilot's description of the flight and the limited flight information (e.g., time of flight, fuel consumption, altitude level, airspeed, etc.) known to the pilot and ground station personnel." (DJI-1011, 1:18-23.)

190. Jiang notes that this system has "inherent disadvantages." (DJI-1011, 1:31.) First, the "manually prepared Pilot Log may include inaccuracies, both due to a pilot's failure to notice or recall potentially important details, and as a result of a pilot attempting to exclude events which might suggest pilot error." (DJI-1011, 1:32-35.) Second, "the current Pilot Log system also is time consuming to prepare and is prone to errors in transcription, etc." (DJI-1011, 1:38-40.) Third, "with the large amount of data which can be used to describe a flight and track the response

of both the pilot and aircraft, it desirable to have access to more of it than may be available through a pilot's recollections or recording of data during the flight, or that [may be] available to ground personnel from air traffic control computers." (DJI-1011, 1:40-45.)

191. An "automated system for collection and management of flight data indicative of aircraft operating parameters and a pilot's actions would be useful." (DJI-1011, 1:47-49.) This log "could be used for evaluation of pilot performance and also to assist aircraft mechanics in monitoring the operation of the aircraft systems for purposes of maintenance scheduling and repairs." (DJI-1011, 1:52-56.) Accordingly, "[w]hat is desired is a data processing system which automates the collection and analysis of flight data generated during the operation of an aircraft over the entire time of a flight, and which can be used to produce a report of the flight for purposes of monitoring pilot and aircraft performance." (DJI-1011, 2:38-42.)

192. Jiang's automated flight data management system, illustrated Figure 1, reproduced below, "may be conveniently represented in the form of six discrete layers." (DJI-1011, 4:32-35.) In the system, "each pilot has their own Pilot Log Card which is a portable, self-protected secure memory device." (DJI-1011, 4:37-38.) A pilot "insert[s] his Pilot Log Card into the aviation smart log box (layer 3) before flying the aircraft." (DJI-1011, 4:50-52.) "The pilot's relevant personal

information, flying history, current flight record, keys for data encryption, and initial data compression ratio (as well as any other relevant or user configurable information) are also stored on the card." (DJI-1011, 13:15-19.)

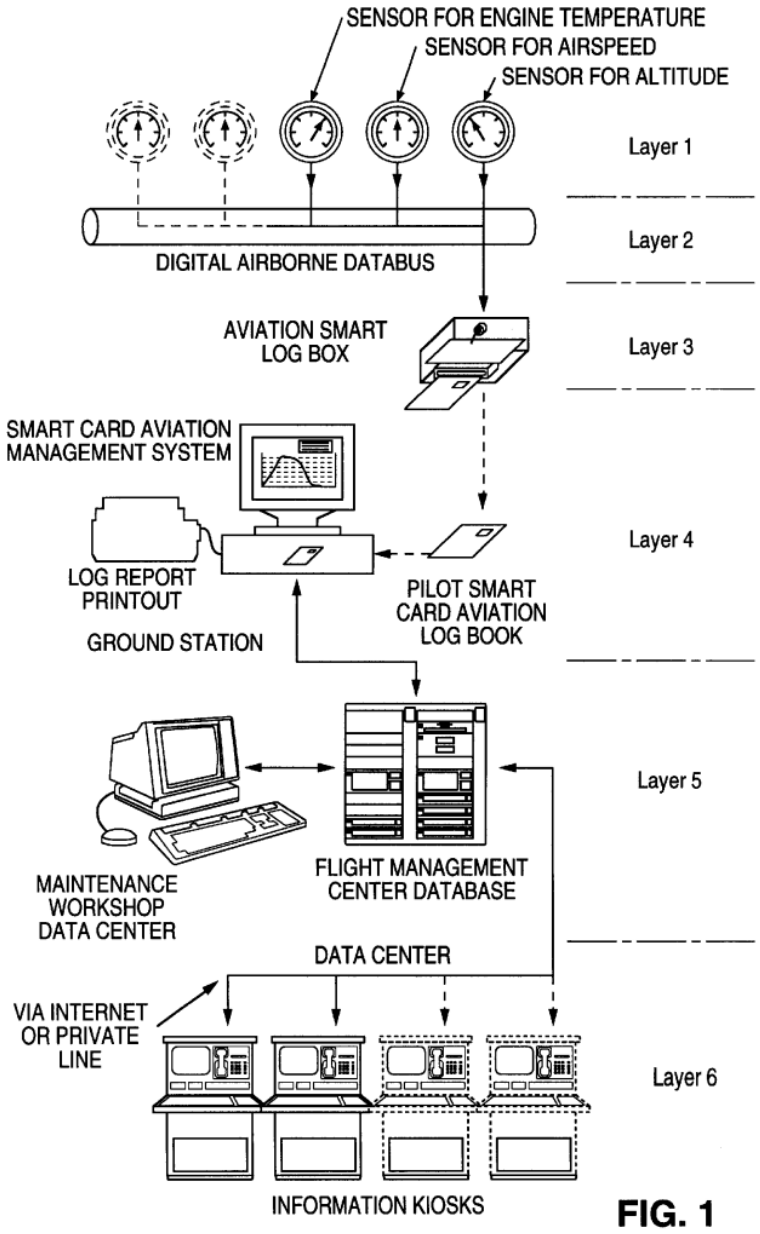

Jiang, Figure 1

193. During a flight, "flight parameter data is continuously stored on the memory device." (DJI-1011, 4:54-55.) "The flight parameter data are typically obtained from sensors located within the aircraft or on its surface (layer 1)." (DJI-1011, 4:55-57.) These sensors detect parameters such as "engine temperature, airspeed, aircraft altitude, aircraft heading, fuel level, etc., and are conventionally installed in aircraft to provide flight data to the flight crew during operation of the craft." (DJI-1011, 4:57-61.) The sensors "produce either an analog or digital signal indicative of the value of the sensed parameter." (DJI-1011, 5:10-11.) The sensor output signals are conventionally transmitted "to a common location by a digital airborne databus (layer 2), which is installed in the aircraft." (DJI-1011, 5:13-16.)

194. The smart log box "identif[ies] the signals of interest, sampl[es] the data represented by those signals, filter[s] the signals (if necessary), decod[es] the signals (if necessary, to remove any encoding introduced by the sensors or placement of the signals on the databus), encrypt[s] the signals, and compress[es] the encrypted signals." (DJI-1011, 5:27-33.)

195. After the flight, "the pilot withdraws the Pilot Log Card from the smart log box and passes it to Ground Station personnel (layer 4)." (DJI-1011, 5:53-55.) "Data recorded in the memory device is then downloaded by an authorized person to a Ground Station processing station." (DJI-1011, 5:55-57.) For example, authorized ground station personnel "inserts the card into a card

reader connected to the Ground Station Workstation." (DJI-1011, 15:15-17.) The downloaded data is "analyzed to generate a variety of Flight Log Reports." (DJI-1011, 5:57-59.) "The data analysis is typically performed to evaluate a pilot's responses to conditions encountered during the flight and monitor their skill at operating the aircraft, monitor the aircraft's operation during the flight, and identify conditions suggesting pilot error or a potential mechanical problem with the aircraft." (DJI-1011, 5:62-67.)

196. The relevant data "is then uploaded to the Flight Management Center Database (layer 5)." (DJI-1011, 6:4-5.) The information is then "used for flight planning, flight analysis, fleet maintenance scheduling, and tracking of pilot performance, among other purposes." (DJI-1011, 6:10-13.) The database may be accessed "through a WAN (Wide Area Network) or public INTERNET by pilots or authorized institutions by using a Flight Management Data Information Kiosk (layer 6)." (DJI-1011, 6:14-18.) "This may be done for purposes of accessing a pilot's flight records to evaluate their performance, to review the operational history of an aircraft or airlines, etc." (DJI-1011, 6:10-13.)

197. "Data gathered over a longer time period than a single flight may be used to spot trends in performance or aircraft operation for individual pilots or aircraft, or groups of pilots or aircraft." (DJI-1011, 16:18-21.) The data is also provided to information kiosks of layer 6 "so that pilots, airlines, regulatory

officials, or the public can have access to the flying records of pilots, aircraft, and airlines." (DJI-1011, 16:22-25.) The system of Jiang has the advantages of "(1) providing aircraft operators with a secure record of a pilot's flights; (2) providing pilots with an accurate and secure record of their personal flying history; (3) providing airline operators or ground personnel with the ability to analyze pilot and aircraft performance rapidly after each flight …" (DJI-1011, 16:59-67.)

198. Jiang's system uses "an authorization hierarchy so that different authorization 'keys' permit access to the data or enable certain functions to be performed on the data, depending upon the person requesting access." (DJI-1011, 7:15-19.) The "multi-level scheme permits different levels of data access and manipulation depending upon the needs of the authorized person.' (DJI-1011, 13:26-28.)

3. Motivation to Combine

199. A POSITA would have been motivated to combine Jiang's pilot logbook teachings with Uczekaj's data collection teachings. Specifically, a POSITA would have been motivated to implement the functionality of Jiang's pilot logbook, including the file structure for storing pilot and flight performance data, in Uczekaj's pilot logbook application executing on a non-certified device. A POSITA would further be motivated to use Jiang's ground-based system for

analysis and storage of recorded pilot logbook data to provide continued evaluation of pilot and aircraft performance.

200. First, Uczekaj explicitly suggests the combination, teaching a flight logbook application as I discussed in §VI.A.1. (DJI-1010, 10:56-11:6.) However, Uczekaj does not provide detail regarding the data required to support a pilot logbook application or a means for storing such data in a data structure on its non-certified device. Based on Uczekaj's suggestion, a POSITA would have therefore been motivated to search for logbook applications and would have been led to Jiang, which discloses both an electronic logbook and pilot and aircraft performance analysis applications. Uczekaj and Shavit are both from the same field of endeavor as the '950 patent, namely, aircraft data collection and monitoring.

201. Second, a POSITA would have been motivated to use the logbook application on Uczekaj's non-certified device to implement Jiang's pilot log card to simplify the process of acquiring data and transferring the data to the ground station. Jiang's system requires a pilot to carry a separate smart card onto the plane, insert the card into the log box, retrieve the card, and then carry the card to a ground station employee. (*See, e.g.,* DJI-1011, 4:51-55, 5:53-57.) The ground station employee then must insert the smart card into a reader to download the data. (*See,* DJI-1011, 15:15-17.) In addition to requiring manual handling of a

small memory device by multiple individuals, this process delays transmission of the flight data until the pilot provides the smart card to ground personnel. In the combined system of Uczekaj and Jiang, data is downloaded from Uczekaj's non-certified device without requiring manual intervention of a ground employee to remove, transport and insert the card.

202. Third, POSITA would have been motivated to combine Jiang's pilot performance and aircraft performance monitoring teachings, including integrating the flight management center database of layer 5 and access computers of layer 6 with Uczekaj to improve flight safety. Jiang suggests the combination noting that an automated pilot log book is "used to evaluate a pilot's performance, monitor an aircraft's operation during a flight, and assist in identifying mechanical problems or other **safety concerns**." (DJI-1011, 2:34-37; 3:66-4:2.) A POSITA would have been further motivated to integrate operational safety measures into the system of Uczekaj based on the FAA guidance issued in 2004 regarding the development, implementation, and operation of the FOQA program, which is a voluntary program "designed to make commercial aviation safer by allowing airlines and pilots to share de-identified aggregate information with the FAA." (DJI-1018, 1, 82.) Finally, Uczekaj suggests this use, teaching that its non-certified devices support functionality of maintaining/enhancing pilot skills, data analysis, and instructor critique "between flights." (DJI-1010, 5:43-48; Figure 2.)

203. Fourth, a POSITA would have been motivated to use Uczekaj's non-certified device with Jiang's pilot logbook to improve security and to ensure that data is properly transferred. Jiang's pilot log smartcard could easily be misplaced or inadvertently carried off by a pilot. A wireless implementation allows automatic downloading of data and improves the traceability of Uczekaj's non-certified device.

204. Finally, the combination of Jiang with Uczekaj is simply the combination of prior art elements according to known methods to yield predictable results. A POSITA would have combined the elements as claimed by known methods because the combination uses Jiang's file storage structure with Uczekaj's software application executing on well-known commercial off-the-shelf devices and uses Jiang's ground-based analysis application and database. . A POSITA would have therefore had a reasonable expectation of success in the combination because the combination involves integration of software logic and database file storage structures which would have been well-known and within the capability of a POSITA. Additionally, each element performs the same function in the combination as it does in the original reference. For example, Jiang's logbook collects, processes and locally stores data in the combination like it does separately. Jiang's ground-based analysis and database process and store the flight data in the same manner in the combination as it does separately. And Uczekaj's

gateway collects and wirelessly transmits data to the non-certified device which in turn provides to the ground station in the combination, like it does separately.

B. Independent Claim 1

205. The combination of Uczekaj and Jiang renders claim 1 obvious. I reproduce claim 1 below with limitations labeled for ease of discussion.

> **[1P]** An aircraft, comprising:
>
> **[1A]** a sensor configured to sense flight performance of the aircraft during flight;
>
> **[1B]** an avionics system associated with the sensor, the avionics system comprising:
>
> **[1B.1]** a memory card interface;
>
> **[1C.1]** a database in data communication with the sensor and the avionics system,
>
> **[1C.2]** the database being configured to store information relating to a pilot flying the aircraft during flight and the flight performance of the aircraft during flight;
>
> **[1D.1]** a wireless transmitter having memory,
>
> **[1D.2]** the wireless transmitter in data communication with the avionics system and the database,
>
> **[1D.3]** the wireless transmitter comprising a non-volatile memory card coupled to the memory card interface of the avionics system; and
>
> **[1E.1]** a transceiver comprising an input device,
>
> **[1E.2]** the transceiver having a transceiver identity associated with pilot identification information,

[1E.3] the transceiver being configured for receiving information relating to sensed flight performance from the wireless transmitter, for associating the thus received information with the pilot identification information associated with the transceiver identity, and for transmitting the received information with the thus associated pilot identification information to the database;

[1F] wherein the transceiver is a wireless transceiver in data communication with the wireless transmitter;

[1G] wherein the wireless transceiver is configured to wirelessly receive and transmit aircraft flight performance data to the database;

[1H] wherein the stored sensed flight performance is only accessible with the associated pilot identification information;

[1I] wherein the avionics system is configured to monitor aircraft flight performance data from the sensor; and

[1J] wherein the pilot identification information is entered directly into the input device of the transceiver.

1. Preamble [1P]

206. Uczekaj's gateway "is installed in the cockpit of an **aircraft** and interfaces with FAA-certified devices." (DJI-1010, 5:66-6:1.) Jiang is also "directed to a data processing system for the acquisition, storage, and analysis of flight parameter data generated during flight of an **aircraft**." (DJI-1011, 3:60-62.) The combination of Uczekaj and Jiang therefore discloses an "*aircraft*" [1P]. (*See*

also, DJI-1011, claim 1 ("A method processing information on-board an **aircraft**"), claim 10 ("A system for transmitting and receiving **aircraft** data communications").)

207. Because the preamble of claim 1 is limiting, I discuss how the prior art establishes that the "*aircraft*" includes each limitation recited in the claim.

2. "*Sensor*" [1A]

208. The combination of Uczekaj and Jiang discloses "*a sensor configured to sense flight performance of the aircraft during flight*" [1A]. Sensor data, "such as ADC, AHRS, OAT[8] and/or navigator LAT/LONG is stored in a predetermined memory storage device, located locally on the gateway or elsewhere in the system." (DJI-1010, 13:33-36.) Uczekaj's gateway therefore "includes an interface, bi-directional where appropriate, to FAA-certified NAV/COM/GPS devices and other ship's sensors, such as engine sensors, attitude information, ADC information, OAT, etc." (DJI-1010, 15:10-13.) This interface "is used to read data from these sensors." (DJI-1010, 15:14-15.) Sensor data may also "be obtained directly from sensors connected to the gateway." (DJI-1010, 13:36-37.) The stored sensor data "is available for bulk load by applications for later analysis as well as

[8] ADC: Air Data Computer, AHRS: Attitude and Heading Reference System, OAT: Outside Air Temperature

being available to application on a non-real time basis." (DJI-1010, 13:40-42.) One application on the non-certified device that uses sensor data is the pilot's logbook application. (*See*, DJI-1010, 10:63-64.) Jiang similarly discloses sensors, located within the aircraft or on its surface that, "detect parameters such as engine temperature, airspeed, aircraft altitude, aircraft heading, fuel level, etc." and to provide flight data during operation of the aircraft. (DJI-1011, 4:55-61.)

3. "*Avionics System*" [1B]/[1I][9]

209. The combination of Uczekaj and Jiang discloses "*an avionics system associated with the sensor*" [1B]. Uczekaj's gateway provides a link "to FAA-certified devices, such as ASPEN's EFD, via an Ethernet interface, or such as a navigation system, via an ARINC429 (RS-232) connection." (DJI-1010, 4:51-54.) These FAA-certified devices (e.g., the EFD and navigation system) are individually and collectively "*an avionics system*" because they are electronics in the aircraft.

[9] As I noted previously, where a later limitations recites content that is closely related to an earlier limitation (as is the case with 1B and 1I), I discuss those limitations together.

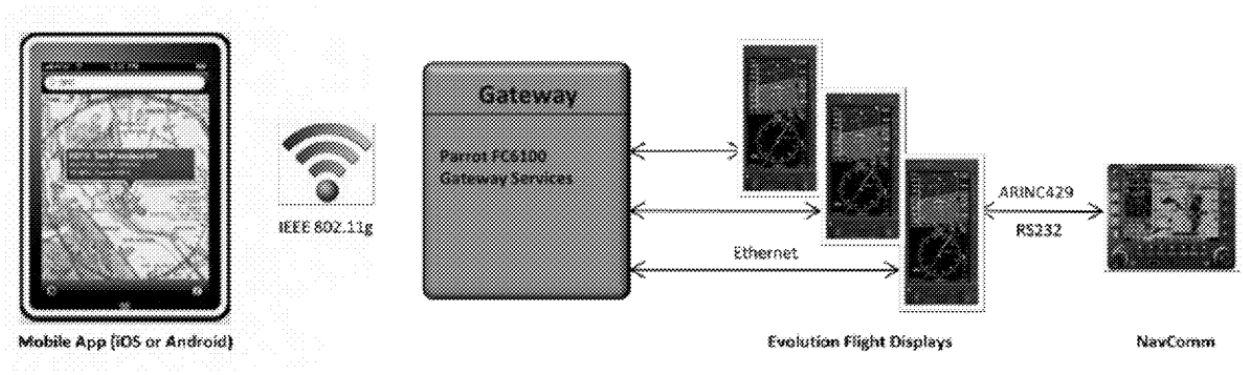

Uczekaj, Figure 1

210. Uczekaj discloses that in a preferred embodiment the gateway includes two external memory card slots (SDx) such as SD card slots "for internal data storage." (DJI-1010, 7:4-8, 7:21-22.) The primary card "store[s] Android OS, user applications, and application data." (DJI-1010, 7:22-23.) The secondary card "store[s] application data, flight logs, data recorder, information, and entertainment media." (DJI-1010, 7:24-26.) The external memory card slot of Uczekaj is therefore a "*memory card interface.*"

211. In Uczekaj, the gateway may be "part of [a] FAA-certified device." (DJI-1010, 4:64-67.) A POSITA would have been motivated to implement the gateway as part of the FAA-certified device. In Uczekaj's FAA-certified device with gateway functionality, the slots for external memory cards (e.g., SD cards) are integrated into the FAA-certified device ("*avionics device*"). Thus, the

combination of Uczekaj and Jiang discloses "*an avionics system*" [1B] comprising "*a memory card interface*" [1B.1].

212. In Uczekaj, sensor data is obtained by the gateway through "sensors connected to FAA-certified devices." (DJI-1010, 13:36-39.) Jiang explains that the sensors "detect parameters such as engine temperature, airspeed, aircraft altitude, aircraft heading, fuel level, etc." to provide the flight performance data during operation of the aircraft. (DJI-1011, 4:55-61.) Thus, the combination of Uczekaj and Jiang discloses an "*avionics system associated with the sensor*" [1B] that "*is configured to monitor aircraft flight performance data from the sensor*" [1I].

4. "*Database*" [1C]

213. Because the preamble is limiting, the recited "*database*" is included in the "*aircraft*." In §VI.B.4.a, I demonstrate that the combination of Uczekaj and Jiang discloses a "*database*" internal to the non-certified device, meeting limitations [1C.1] and [1C.2] under the proper interpretation of the claims. Should PO contend the preamble is not limiting, the ground-based "*database*" of Uczekaj and Jiang also meets limitation [1C.1] and [1C.2].

a. "*Database*" in the aircraft

214. The non-certified user device in the combination of Uczekaj and Jiang includes a "*database being configured to store information relating to a pilot flying the aircraft during flight and flight performance of the aircraft during*

flight" [1C.1]. During operation of Uczekaj's logbook application on the non-certified device, the "application sends a request to the gateway to initiate logging." (DJI-1010, 10:63-64.) After acknowledgement of the request, the gateway forwards the aircraft performance data "on to the non-certified device for storage." (DJI-1010, 11:4-6.) Uczekaj's logbook application then "records pilot hours and aircraft performance data." (DJI-1010, 10:62-63.)

215. In the combination of Uczekaj and Jiang, pilot information and flight performance data is stored by the pilot logbook application in the file structure disclosed by Jiang and illustrated in Figure 10 below. (DJI-1011, 14:30-15:10.) In Jiang's file structure, "the Master File (MF) is similar to a root directory in DOS systems; the Dedicated File (DF) is similar to a sub-directory; and the Elementary File (EF) is similar to a data file." (DJI-1011, 14:11-14.) Access to the data (e.g., read, write, and update access) "is protected by different access keys or codes." (DJI-1011, 14:14-16.) "In this way, different levels of data access may be provided in an authorization hierarchy to provide a desired level of security protection for each type of data." (DJI-1011, 14:23-26.)

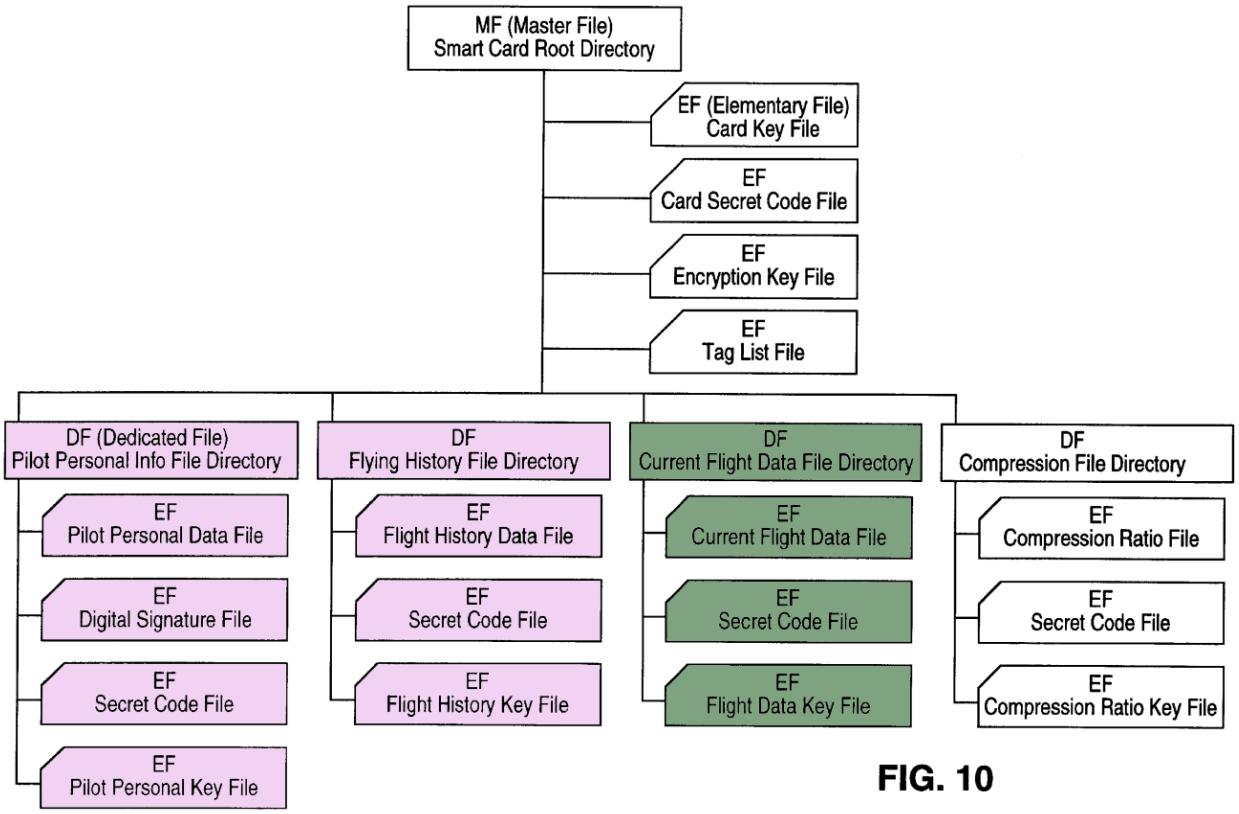

Jiang, Figure 10

216. A database is a "collection of logically related data stored together in one or more computerized files." (DJI-1020, 304.) The structured logbook information stored in the non-certified device using Jiang's file structure is therefore a "*database*." Because the aircraft performance data is collected from the sensors by the FAA-certified devices ("*avionics system*") and provided to the gateway which transmits the data to the non-certified device for storage in the non-certified device, the "*database*" is "*in data communication with the sensor and the avionics system*" [1C]. (*See also*, §§VI.B.2-3.)

217. Uczekaj explains that "during flight, a pilot uses non-certified devices to interface with FAA-certified devices, via the gateway, to accomplish tasks." (DJI-1010, 5:30-39.) As illustrated in Figure 3 below, the non-certified device is thus carried onto the aircraft during flight. Accordingly, the "*database*" in the non-certified device is on the aircraft.

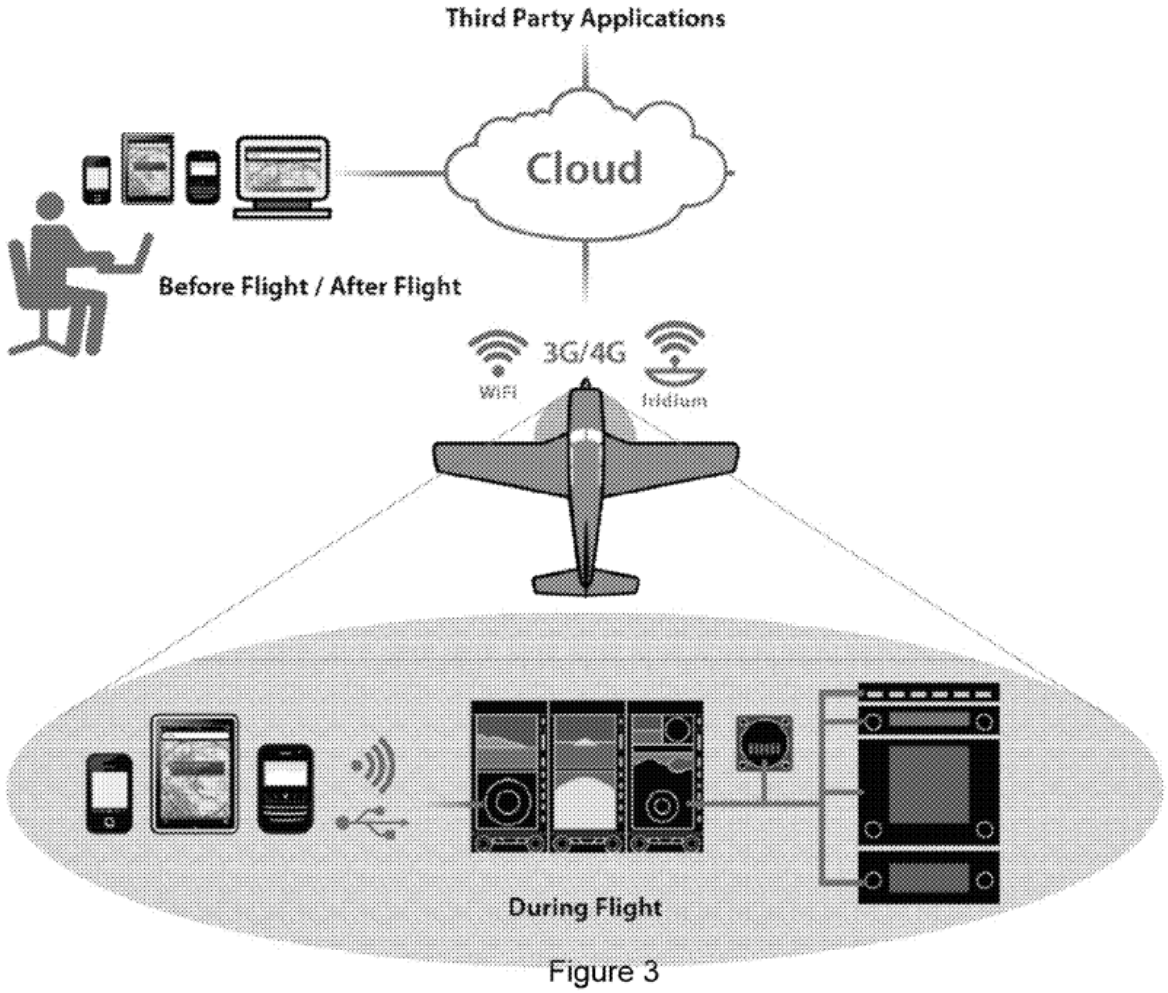

Uczekaj, Figure 3

218. The logbook in the combination of Uczekaj and Jiang stores "pilot's relevant personal information, flying history, current flight record, keys for data encryption, and initial data compression ratio (as well as any other relevant or user configurable information)." (DJI-1011, 13:15-16.) As shown in Jiang's Figure 10 above, for a pilot, the stored data includes the pilot's personal information data file [shaded pink] and the pilot's flight history data file [shaded pink] which are "*information relating to a pilot flying the aircraft during flight*." The stored data also includes the current flight data file [shaded green] which is "*flight information of the aircraft during flight*."

219. Thus, the combination of Uczekaj and Jiang discloses that the aircraft includes a "*database*" that is "*configured to store information relating to a pilot flying the aircraft during flight and flight performance of the aircraft during flight*" [1C.2].

b. "*Database*" external to the aircraft.

220. Should an argument be made that the preamble is not limiting and claim 1 encompasses both a "*database*" in the aircraft and a database external to the aircraft, the combination of Uczekaj and Jiang discloses both.

221. In Jiang, after termination of the flight, the data "recorded in the memory device is then downloaded by an authorized person to a Ground Station processing station." (DJI-1011, 5:53-57.) The downloaded raw data in Jiang "is

then uploaded to the Flight Management Center Database". (DJI-1011, 6:4-5, 16:11-15 ("The reports (and if desired, the raw data) are then sent to the flight management center database").) The information is subsequently "used for flight planning, flight analysis, fleet maintenance scheduling, and tracking of pilot performance, among other purposes." (DJI-1011, 6:10-13.) Thus, the raw data stored in the logbook on the non-certified device is transmitted to the ground station and uploaded to the Flight Management Center Database. Because the uploaded raw data includes the data stored in the pilot logbook that was downloaded from the non-certified device, the Flight Management Center Database is therefore also "*a database in data communication with the sensor and the avionics system*" [1C] and is "*configured to store information relating to a pilot flying the aircraft during flight and flight performance of the aircraft during flight*" [1C.1].

5. "*Wireless Transmitter*" [1D]

222. Claim 1 recites a set of limitations directed to a "*wireless transmitter.*" I reproduce these limitations below.

> **[1D]** a wireless transmitter having memory,
>
> **[1D.1]** the wireless transmitter in data communication with the avionics system and the database,

[1D.2] the wireless transmitter comprising a non-volatile memory card coupled to the memory card interface of the avionics system.

223. The combination of Uczekaj and Jiang discloses a "*wireless transmitter.*" Uczekaj "provides an electronic gateway interface module designed to provide telecommunications connectivity between cockpit avionics and mobile devices (i.e., between FAA-certified and non-certified devices)." (DJI-1010, 4:43-47.) Specifically, Uczekaj's gateway, illustrated in Figure 4 below, includes "a communication module that provides in-aircraft telecommunications connectivity" such as WiFi, 3G/4G cellular, and Iridium satellite. (*See* DJI-1010, 6:28-30, Figure 5.) Thus, Uczekaj's gateway acts as a "*wireless transmitter*" which is "*in data communication with the avionics system* [other FAA-certified devices] *and the database*" [1D.1]. The gateway further includes "memory storage with optional additional external memory interface (e.g., a memory card)." (Uczekaj, 6:34-37.) Uczekaj therefore discloses "*a wireless transmitter having memory*" [1D].

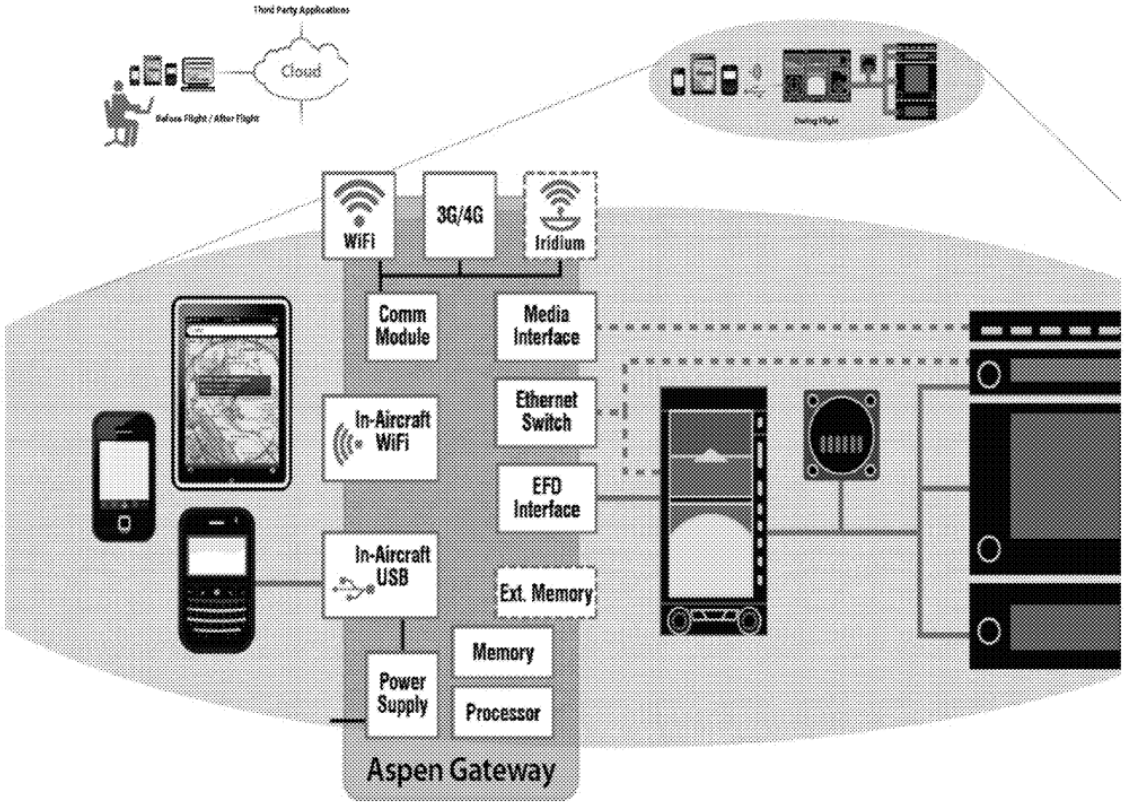

Uczekaj, Figure 4

224. As I discussed above, Uczekaj discloses that, in a preferred embodiment, the memory card of Figure 4 is an SD memory card. Specifically, Uczekaj "the gateway includes two SD card slots for internal data storage." (DJI-1010, 7:21-22.) The primary card "store[s] Android OS, user applications, and application data." (DJI-1010, 7:22-23.) The secondary card "store[s] application data, flight logs, data recorder, information, and entertainment media." (DJI-1010, 7:24-26.) An SD memory card is "*non-volatile memory.*" Therefore, the gateway (the "*wireless transmitter*") comprises "*a non-volatile memory card.*"

225. As I discussed in §VI.B.3, in the combined system, the gateway is "part of [an] FAA-certified device" (the "*avionics system*") and therefore the "*memory card interface*" of the gateway is integrated into the FAA-certified device. (*See, e.g.,* DJI-1010, 4:64-67.) Accordingly, when the SD card is inserted into the card slot, Uczekaj discloses "*the wireless transmitter comprising a non-volatile memory card coupled to the memory card interface of the avionics system*" [1D.2].

6. "*Transceiver*" Limitations

226. Claim 1 recites the following limitations directed to "*a transceiver*." The combination of Uczekaj and Jiang discloses these "*transceiver*" limitations.

> **[1E]** a transceiver comprising an input device,
>
> **[1E.1]** the transceiver having a transceiver identity associated with pilot identification information,
>
> **[1E.2]** the transceiver being configured for receiving information relating to sensed flight performance from the wireless transmitter, for associating the thus received information with the pilot identification information associated with the transceiver identity, and for transmitting the received information with the thus associated pilot identification information to the database;
>
> **[1F]** wherein the transceiver is a wireless transceiver in data communication with the wireless transmitter;

> **[1G]** wherein the wireless transceiver is configured to wirelessly receive and transmit aircraft flight performance data to the database;
>
> …
>
> **[1J]** wherein the pilot identification information is entered directly into the input device of the transceiver

a. "*Transceiver*"

227. Uczekaj's gateway "provides a wireless link to non-certified devices via WiFi (IEEE 802.11 a/b/g/n)." (DJI-1010, 4:57-59.) Examples of non-certified devices include (but are not limited to) "cell phones, smart phones, BLACKBERRY mobile communications devices, IPADs, IPODs, IPHONEs, laptops, tablet PCs, and similar mobile computing platforms." (DJI-1010, 1:50-54.) The non-certified device both transmits information to and receives information from the gateway device ("*the wireless transmitter*"). Accordingly, the non-certified device is a "*wireless transceiver.*"

b. *"Transceiver comprising an input device"* [1E], "*Pilot identification information is entered directly*" [1J].

228. Uczekaj teaches that the user (e.g., pilot) enters data through a user input device on the non-certified device. (*See, e.g.* DJI-1010, 5:25-48, Figure 2.) For example, with the pilot logbook application, the user "initiates logging via a software application" on the device. (DJI-1010, 10:56-58, Figure 13 (referencing

the graphical user interface of the non-certified device).) In the flight planning application, the pilot "perform[s] standard flight planning activities on an application running on a non-certified device." (DJI-1010, 8:9-11.) Thus, Uczekaj discloses "*a transceiver comprising an input device*" [1E].

229. Jiang's pilot log contains the pilot's **personal identification data**, the pilot's authorization codes, and flight history data. (*See* DJI-1011, 4:6-13; 14:27-15:10.) Jiang does not explicitly disclose how the personal identification data stored in the pilot log is entered into the device.

230. A POSITA would have understood that the non-certified device includes the capability to enter the information via the user interface on the non-certified device. A POSITA would have been motivated to include such a capability if not expressly part of the device and application. The pilot carries the device acting as the pilot log and uses it to record information related to the pilot. As a result, a POSITA would have been motivated to provide the pilot with the ability to enter and modify their personal identification data into her log stored on their device using the user interface of the device. Additionally, the process of entering personal data into a portable device was well-known and understood by 2013, even by a layperson. Thus, the combination of Uczekaj and Jiang teaches or at least suggests "*the pilot identification information is entered directly into the input device of the transceiver*" [1J].

c. "*Transceiver having a transceiver identity*" [1E.1]

231. A POSITA would have understood that a WiFi (802.11) networking device, such as Uczekaj's non-certified device, includes a MAC address assigned by the manufacturer. A POSITA would have understood that the IEEE 802.11 wireless LAN protocol used by Uczekaj includes a networking device's MAC address in the MAC sublayer in each transmitted message. (*See* DJI-1021, 40-41, DJI-1022, 31-43.) Accordingly, because the non-certified device of Uczekaj wirelessly receives and transmits data using the standardized IEEE 802.11 protocol, the device has a MAC address which is its "*transceiver identity*."

232. The "*pilot identification information*" is stored in the "*database*" on the non-certified device as I discussed in §VII.B.4.a. By storing the "*pilot identification information*" in the non-certified device having a "*transceiver identity*" (MAC address), the "*transceiver identity* [is] *associated with pilot identification information.*" The "*pilot identification information*" is subsequently transmitted with flight performance data to the ground-based processing station. (*See* §VII.B.4.b.) By transmitting the "*pilot identification information*" in a wireless message with the MAC address of the non-certified device in the MAC sublayer, the "*transceiver identity* [is further] *associated with pilot identification information.*"

d. "*Transceiver being configured for …*" [1E.2], [1F], [1G]

233. During operation of Uczekaj's logbook application, the gateway ("*wireless transmitter*") receives "aircraft and/or engine status (or other information to be logged)" from the sensors associated with one or more FAA-certified devices and "forwards it on to the non-certified device for storage." (DJI-1010, 11:1-6.) Uczekaj's gateway ("*transceiver*") communicates to non-certified devices via WiFi (IEEE 802.11a/b/g/n). (*See* DJI-1010, 4:57-59.) The combination of Uczekaj and Jiang therefore discloses "*the transceiver being configured for receiving information relating to sensed flight performance from the wireless transmitter*" [1E.2] and "*the transceiver is a wireless transceiver in data communication with the wireless transmitter*" [1F].

234. In the combination of Uczekaj and Jiang, the received flight data is transmitted to the logbook files on the non-certified device. (*See* DJI-1011, 4:54-55.) As I discussed in §VI.B.4, the pilot logbook files stores "personal identification data" for the pilot and the current flight data, among other information. (*See* DJI-1011, 14:30-15:10.) As discussed in §VI.B.6.c, the pilot identification information is associated with the transceiver identity. Through the process of transmitting the flight data for storage in a record associated with the pilot by the pilot's identification information, the transceiver associates the received flight data with the pilot identification information. For example, the

transceiver must identify the pilot record (by identification information) in the database write (transmission) of the associated flight data. Thus, the combination of Uczekaj and Jiang discloses that "*the transceiver*" is configured "*for associating the thus received information with the pilot identification information associated with the transceiver identity, and for transmitting the received information with the thus associated pilot identification information to the database*" [1E.2] and "*the wireless transceiver is configured to wirelessly receive and transmit aircraft flight performance data to the database*" [1G].

235. Additionally, should an argument be made that the preamble is not limiting, the combination of Uczekaj and Jiang discloses these limitations for another reason. In Jiang, after termination of the flight, the data "recorded in the memory device is then downloaded by an authorized person to a Ground Station processing station." (DJI-1011, 5:53-57.) Thus, in the combination of Uczekaj and Jiang, the non-certified device downloads the data stored in the file structure to the ground-based system including the "*pilot identification information*" and flight data.

236. The combination of Uczekaj and Jiang therefore discloses that "*the transceiver*" is configured "*for associating the thus received information with the pilot identification information associated with the transceiver identity, and for transmitting the received information with the thus associated pilot identification*

information to the database" [1E.2] and "*the wireless transceiver is configured to wirelessly receive and transmit aircraft flight performance data to the database*" [1G].

7. "*Only Accessible*" [1H].

237. As I discussed in §VI.B.4, the "*sensed flight performance*" data is stored in at least two locations in the combined system of Uczekaj and Jiang: the local "*database*" of the non-certified device and the external ground-based database. In both storage locations, "*the stored sensed flight performance is only accessible with the associated pilot identification information*" [1H].

238. Jiang expressly discloses controlling access to stored data. Jiang "provides controls on the personnel authorized to access" the data recorded in the pilot log. (DJI-1011, 4:2-3.) Specifically, "[a]ccess to data or files contained on the smart card can be controlled by use of a multi-level authorization scheme." (DJI-1011, 13:23-24.) The data access "is protected by different access keys or codes." (DJI-1011, 14:14-16.) And "[o]nly when the correct keys or codes are presented, will the corresponding rights be authorized." (DJI-1011, 14:17-19.) For example, the pilot personal information database has a set of secret codes controlling access to the file. (*See* , 14:30-15:10.) The pilot flight history database requires the "pilot's encryption keys" for accessing the data. (*See* Jiang, 14:30-15:10.) The pilot's secret codes and keys are part of the identification information for a pilot.

239. Accordingly, the combination of Uczekaj and Jiang discloses "*the stored sensed flight performance* [in the local "*database*"] *is only accessible with the associated pilot identification information*" [1H].

240. Uczekaj also suggests this limitation. Uczekaj teaches a security key feature that limits the ability of a user to use the gateway. "The security key feature provides an option for a subscription arrangement in using the gateway." (DJI-1010, 5:50-52.) Specifically, "each mobile device is issued a unique security key" so that the "security key feature is **specific to each user**." (DJI-1010, 5:56-59.) If the user does not have a key or the security key is deactivated, "that user can no longer access the gateway." (DJI-1010, 5:52-54.) Thus, Uczekaj suggests limiting user access unless the proper credentials are presented. Based on Uczekaj's suggestion and the general knowledge in the art, a POSITA would have been motivated to implement security on the non-certified device to limit access to the non-certified device and the logbook application to only an individual with the proper credentials, such as username and password combination. Indeed, such security protections for smartphones and laptops were commonplace long before the '950 patent.

241. In the combination of Uczekaj and Jiang, the pilot log data including the pilot identification information and associated flight data is stored in ground-based system database for subsequent access to evaluation pilot performance. (*See*

DJI-1011, 6:10-13, 16:22-67.) Jiang does not explicitly disclose security settings for its ground-based database. However, a POSITA would have understood that data records in the database are protected or alternatively would have been motivated to protect the data records stored in the database using a common access security technique such as the pilot's log-in and password. As one example, U.S. Patent 8,495,722 to McCusker, which I discussed in Ground 1, discloses that a "user logs into a portable electronic device or an application thereof using one or more credentials (e.g., a username and password combination)." (DJI-1023, 8:5-7.) Jiang suggests the use of such a security mechanism stating that a desirable feature is "the ability to limit access to the data to authorized users." (DJI-1011, 6:60-65.) Indeed, as I described above, Jiang discloses a similar security mechanism for its logbook device. Furthermore, limiting access to stored data based on entry of a user identifier and password would have been known and understood by even a layperson long before the '950 patent.

242. Thus, the combination of Uczekaj and Jiang teaches or at least suggests "*the stored sensed flight performance* [in the ground-based database] *is only accessible with the associated pilot identification information*" [1H].

C. Independent Claim 9

243. The combination of Uczekaj and Jiang renders claim 9 obvious. I reproduce claim 9 below with labels added for ease of discussion.

[9P] An aircraft flight performance monitoring system, comprising:

[9A] a wireless transmitter having memory,

[9A.1] the wireless transmitter in data communication with an avionics system of an aircraft,

[9A.2] the avionics system comprising a memory card interface and the wireless transmitter comprising a non-volatile memory card coupled to the memory card interface of the avionics system;

[9B] a database in data communication with the avionics system,

[9B.1] the database being configured to store information relating to a pilot flying the aircraft during flight and flight performance of the aircraft during flight;

[9C] a transceiver comprising an input device;

[9C.1] the transceiver having a transceiver identity associated with pilot identification information,

[9C.2] the transceiver being configured for receiving information relating to sensed flight performance from the wireless transmitter, for associating the thus received information with the pilot identification information associated with the transceiver identity, and for transmitting the received information with the thus associated pilot identification information to the database;

[9D] wherein the stored sensed flight performance is only accessible with the associated pilot identification information;

[9E] wherein the wireless transmitter is configured to receive and transmit flight performance data from the avionics system to the transceiver, which in turn is transmitted to the database; and

[9F] wherein the pilot identification information is entered directly into the input device of the transceiver.

1. Preamble [9P]

244. Uczekaj's gateway "is installed in the cockpit of an **aircraft** and interfaces with FAA-certified devices." (DJI-1010, 5:66-6:1.) Applications executing on Uczekaj's non-certified devices "allow users to interface with an aircraft's FAA-certified devices via the gateway." (DJI-1010, 3:13-14.) One application taught by Uczekaj is the pilot logbook application. In this application, the "logging app records pilot hours and aircraft performance data." (DJI-1010, 10:62-63.) During operation, the gateway receives aircraft data (e.g., aircraft and/or engine status) from an FAA-certified device and "forwards it on to the non-certified device for storage." (DJI-1010, 11:1-6.) Jiang similarly discloses a pilot logbook application that is directed to the analysis of "flight parameter data generated during the flight of an aircraft." (DJI-1011, 3:60-62.) The flight parameter data is subsequently used to "evaluat[e] the performance of a pilot, the operation of the aircraft, and identify[] potential mechanical or safety problems." (DJI-1011, 3:66-7:5.)

245. The combination of Uczekaj and Jiang therefore discloses an "*aircraft flight performance monitoring system*" [9P].

2. "*Wireless Transmitter*" Limitations [9A]-[9A.2].

246. Claim 9's "*wireless transmitter*" limitations are substantially overlapping with limitations of claim 1 as illustrated in the following table.

Claim 1	Claim 9
[1B] an avionics system associated with the sensor, the avionics system comprising:	
[1B.1] a memory card interface	
[1D] a wireless transmitter having memory,	**[9A]** a wireless transmitter having memory
[1D.1] the wireless transmitter in data communication with the avionics system and the database,	**[9A.1]** the wireless transmitter in data communication with an avionics system of an aircraft,
[1D.2] the wireless transmitter comprising a non-volatile memory card coupled to the memory card interface of the avionics system; and	**[9A.2]** the avionics system comprising a memory card interface and the wireless transmitter comprising a non-volatile memory card coupled to the memory card interface of the avionics system;

247. Limitation [9A] is identical to limitation [1D]. For the reasons I discussed in §VI.B.5, the combination of Uczekaj and Jiang discloses limitation [9A].

248. The preamble of claim 1 recites an "*aircraft*" and limitation [1B] recites "*an avionics system associated with a sensor*." For the same reasons as I discussed in §§VI.B.1-3, the combination of Uczekaj and Jiang discloses an "*avionics system of an aircraft*." Limitation [1D.1] recites "*the wireless transmitter in data communication with the avionics system and the database*." For the same reasons I discussed in §VI.B.5, the combination of Uczekaj and Jiang discloses "*the wireless transmitter in data communication with an avionics system of an aircraft*" [9A.1].

249. Limitation [1B] recites that the "*avionics system*" comprises "*a memory card interface*." Accordingly, the first part of limitation [9A.2] ("*the avionics system comprising a memory card interface*") is substantially identical to limitation [1B.1]. For the reasons I discussed in §VI.B.3, the combination of Uczekaj and Jiang discloses the first part of limitation [9A.2].

250. The second part of limitation [9A.2] ("*the wireless transmitter comprising a non-volatile memory card coupled to the memory card interface of the avionics system*") is identical to limitation [1D.2]. For the reasons I discussed in §VI.B.5, the combination of Uczekaj and Jiang discloses the second part of limitation [9A.2].

3. "*Database*" Limitations [9B]-[9B.1]

251. Claim 9's "*database*" limitations recite substantially the same language as claim 1's "*database*" limitations. I note that because claim 1's preamble is limiting, the "*database*" must be part of the "*aircraft*." Claim 9's preamble however recites a "*system*" and therefore the "*database*" can be either in the aircraft or external to the aircraft.

Claim 1	Claim 9
[1C] a database in data communication with the sensor and the avionics system,	**[9B]** a database in data communication with the avionics system,
[1C.1] the database being configured to store information relating to a pilot flying the aircraft during flight and the flight performance of the aircraft during flight;	**[9B.1]** the database being configured to store information relating to a pilot flying the aircraft during flight and flight performance of the aircraft during flight;

252. Limitation [9B] overlaps with limitation [1C]. The primary differences are (1) claim 1 requires the "*database*" to be in the "*aircraft*" whereas claim 9 is not so limiting and (2) claim 1 requires the "*database*" to be in "*data communication with* ***the sensor and*** *the avionics system*" whereas claim 9 requires only that the "*database*" be in "*data communication with the avionics system*."

253. In §VI.B.4, I discussed that the combination of Uczekaj and Jiang discloses limitation [1C]. Thus, for the same reasons I discussed in that section, the combination of Uczekaj and Jiang discloses limitation [9B].

254. The language of limitation [1C.1] is identical to limitation [9B.1]. The sole difference again is that the "*database*" of claim 1 is in the "*aircraft*." However, because I addressed both interpretations, for the same reasons I discussed in §VI.B.4, the combination of Uczekaj and Jiang discloses limitation [9B.1].

4. "*Transceiver*" Limitations

255. Claim 9 recites a set of limitations directed to a "*transceiver*" which are identical to limitations in claim 1 as highlighted in the below table. Accordingly, for the reasons I discussed in §VI.B.6, the combination of Uczekaj and Jiang discloses limitations [9C]-[9C.2] and [9F].

Claim 1	Claim 9
[1E] a transceiver comprising an input device	**[9C]** a transceiver comprising an input device;
[1E.1] the transceiver having a transceiver identity associated with pilot identification information	**[9C.1]** the transceiver having a transceiver identity associated with pilot identification information,
[1E.2] the transceiver being configured for receiving information relating to sensed flight performance from the wireless transmitter,	**[9C.2]** the transceiver being configured for receiving information relating to sensed flight performance from the wireless transmitter,

for associating the thus received information with the pilot identification information associated with the transceiver identity, and for transmitting the received information with the thus associated pilot identification information to the database;	for associating the thus received information with the pilot identification information associated with the transceiver identity, and for transmitting the received information with the thus associated pilot identification information to the database;
[1J] wherein the pilot identification information is entered directly into the input device of the transceiver	**[9F]** wherein the pilot identification information is entered directly into the input device of the transceiver.

5. "*Only Accessible*" [9D]

256. Limitation [9D] is identical to limitation [1H]. Therefore, for the reasons I discussed in §VI.B.7, the combination of Uczekaj and Jiang discloses limitation [9D].

Claim 1	Claim 9
[1H] wherein the stored sensed flight performance is only accessible with the associated pilot identification information;	**[9D]** wherein the stored sensed flight performance is only accessible with the associated pilot identification information

6. Data Flow Limitation

257. During operation of the logbook application, the gateway ("*wireless transmitter*") receives "aircraft and/or engine status (or other information to be logged)" from the sensors associated with one or more FAA-certified devices and

"forwards it on to the non-certified device for storage." (DJI-1010, 11:1-6.) The combination of Uczekaj and Jiang discloses "*the wireless transmitter is configured to receive and transmit flight performance data from the avionics system to the transceiver."* Upon receipt of the data, the non-certified device transmits the data to its file structure for storage (the internal aircraft "*database*"). Additionally, the data is uploaded to the Flight Management Center Database (layer 5) (the external "*database*")." (DJI-1011, 6:4-5, 16:11-15 ("The reports (and if desired, the raw data) are then sent to the flight management center database").) Thus, the combination of Uczekaj and Jiang discloses that "*the flight performance data … in turn is transmitted to the database*" [9E].

D. Independent Claim 13

258. The combination of Uczekaj and Jiang renders claim 13 obvious. I reproduce claim 13 below with labels added for ease of discussion.

> **[13P]** A method to monitor aircraft flight performance data, comprising:
>
> **[13A]** providing an avionics system comprising:
>
> **[13A.1]** a sensor for sensing flight performance data; and
>
> **[13A.2]** a memory card interface,
>
> **[13B]** sensing flight performance data with the sensor;
>
> **[13C]** providing a wireless transmitter comprising:
>
> **[13C.1]** memory; and

[13C.2] a non-volatile memory card configured for coupling to the memory card interface of the avionics system;

[13D] transmitting the sensed flight performance data to a transceiver having a transceiver identity associated with pilot identification information;

[13E] entering the pilot identification information directly on the transceiver;

[13F] associating, by the transceiver, the sensed flight performance data received from the wireless transmitter with the pilot identification information associated with the transceiver identity;

[13G] transmitting, by the transceiver, the received sensed flight performance data with the associated pilot identification information to a database; and

[13H] allowing access to the received sensed flight performance data only with the associated pilot identification information.

1. Preamble [13P]

259. As I discussed in §VI.B.1, the combination of Uczekaj and Jiang discloses a system for "*flight performance monitoring*" [1P]. For the reasons discussed in §VI.B.1, the combination of Uczekaj and Jiang also discloses a "*method to monitor aircraft flight performance data*" [13P].

2. "*Providing an avionics system*" [13A], "*Sensing*" [13B] and "*providing a wireless transmitter*" [13C]

260. Claim 13 recites limitations directed to "providing" two structural elements—"*an avionics system*" and "*a wireless transmitter*." As set forth in the following table, these limitations substantially overlap with limitations of claim 1.

Claim 1	Claim 13
[1A] a sensor configured to sense flight performance of the aircraft during flight;	**[13A]** providing an avionics system comprising:
[1B] an avionics system associated with the sensor, the avionics system comprising:	**[13A.1]** a sensor for sensing flight performance data; and
[1B.1] a memory card interface;	**[13A.2]** a memory card interface,
…	**…**
[1D.1] a wireless transmitter having memory,	**[13C]** providing a wireless transmitter comprising:
	[13C.1] memory; and
[1D.3] the wireless transmitter comprising a non-volatile memory card coupled to the memory card interface of the avionics system	**[13C.2]** a non-volatile memory card configured for coupling to the memory card interface of the avionics system;

261. Uczekaj's gateway provides a link "to FAA-certified devices, such as ASPEN's EFD, via an Ethernet interface, or such as a navigation system, via an ARINC429 (RS-232) connection." (DJI-1010, 4:51-54.) These FAA-certified

devices (e.g., the EFD and navigation system) are individually and collectively "*an avionics system*" because they are electronics in the aircraft. Thus, Uczekaj discloses "*providing an avionics system*" [13A].

262. I note that claim 13 recites that the "*avionics system*" comprises "*a sensor.*" However, the sole mention of a sensor in the specification merely says the sensor is associated with the avionics system: "During operation, a sensor 310 associated with avionics system 309 senses performance data of aircraft 311 during flight, which in turn is received, stored, and transmitted to transceiver 305." (DJI-1001, 3:6-10.) Figure 3 of the '950 patent reproduced below further shows the sensor coupled to the avionics system. Uczekaj discloses a similar configuration of sensors and the avionics system. I also note that the sensors disclosed in Uczekaj are themselves electronic devices on the aircraft and hence are avionics.

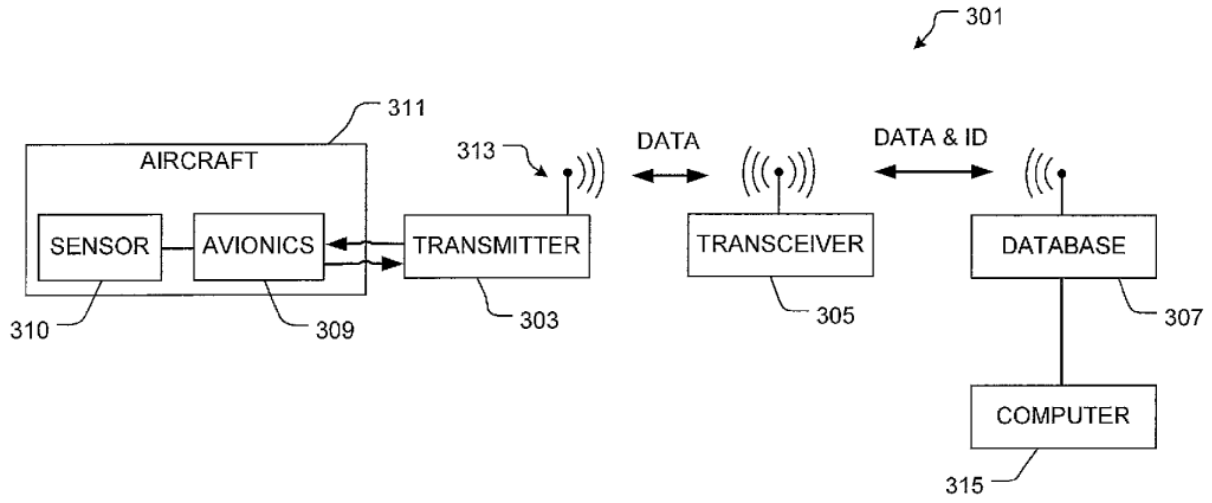

'950 Patent, Figure 3

263. Sensor data, "such as ADC, AHRS, OAT and/or navigator LAT/LONG is stored in a predetermined memory storage device, located locally on the gateway or elsewhere in the system." (DJI-1010, 13:33-36.) Uczekaj's gateway therefore "includes an interface, bi-directional where appropriate, to FAA-certified NAV/COM/GPS devices and other ship's sensors, such as engine sensors, attitude information, ADC information, OAT, etc." (DJI-1010, 15:10-13.) This interface "is used to read data from these sensors." (DJI-1010, 15:14-15.) Sensor data may also "be obtained directly from sensors connected to the gateway." (DJI-1010, 13:36-37.) The stored sensor data "is available for bulk load by applications for later analysis as well as being available to application on a non-real time basis." (DJI-1010, 13:40-42.) One application on the non-certified device that uses sensor data is the pilot's logbook application. (*See*, DJI-1010, 10:63-64.) Jiang similarly discloses sensors, located within the aircraft or on its surface, "detect parameters such as engine temperature, airspeed, aircraft altitude, aircraft heading, fuel level, etc." to provide flight data during operation of the aircraft. (DJI-1011, 4:55-61.) Thus, the combination of Uczekaj and Jiang discloses "*a sensor for sensing flight performance data*" [13A.1] and "*sensing flight performance data with the sensor*" [13B].

264. As I discussed in §IV.B.3, the combination of Uczekaj and Jiang discloses that the avionics system includes a "*memory card interface*" [13A.2].

265. As discussed in §§VI.C.2, VI.B.5, the combination of Uczekaj and Jiang discloses "*a wireless transmitter having memory*" [9A] and "*comprising a non-volatile memory card coupled to the memory card interface of the avionics system*" [9A.2]. For the same reasons as discussed in §§VI.C.2, VI.B.5, the combination of Uczekaj and Jiang discloses "*providing a wireless transmitter comprising: memory; and a non-volatile memory card configured for coupling to the memory card interface of the avionics system*" [13C].

3. "*Transmitting the sensed flight performance data to a transceiver …*" [13D]

266. As I discussed in §§VI.C.6, the combination of Uczekaj and Jiang discloses "*the wireless transmitter is configured to receive and transmit flight performance data from the avionics system to the transceiver*" [9E]. As I discussed in §§VI.C.4, VI.B.6.c, the combination of Uczekaj and Jiang discloses "*the transceiver having a transceiver identity associated with pilot identification information*" [9C.1]. For the same reasons as discussed in §VI.C.6, the combination of Uczekaj and Jiang discloses "*transmitting the sensed flight performance data to a transceiver having a transceiver identity associated with pilot identification information*" [13D].

4. "*Entering the pilot identification information directly on the transceiver*" [13E]

267. Limitation [13E] is substantially the same as limitation [9F]. Accordingly, for the reasons I discussed in §§VI.C.4, VI.B.6.b, the combination of Uczekaj and Jiang discloses "*entering the pilot identification information directly on the transceiver*" [13E].

5. "*Associating, by the transceiver, the sensed flight performance data …*" [13F]

268. As I discussed in §§VI.C.4, VI.B.6.d, the combination of Uczekaj and Jiang discloses "*the transceiver* [is] *configured … for associating the thus received information with the pilot identification information associated with the transceiver identity*" [9C.2]. For the reasons discussed in §§VI.C.4, VI.B.6.d, the combination of Uczekaj and Jiang discloses "*associating, by the transceiver, the sensed flight performance data received from the wireless transmitter with the pilot identification information associated with the transceiver identity*" [13F].

6. "*Transmitting, by the transceiver, the received sensed flight performance data …*" [13G]

269. As discussed in §§VI.C.4, VI.B.6.d, the combination of Uczekaj and Jiang discloses "*the transceiver* [is] *configured … for transmitting the received information with the thus associated pilot identification information to the database*" [9C.2]. For the reasons discussed in §§VI.C.4, VI.B.6.d, the combination of Uczekaj and Jiang discloses "*transmitting, by the transceiver, the*

received sensed flight performance data with the associated pilot identification information to a database" [13G].

7. "*Allowing access to the received sensed flight performance data …*" [13H]

270. Limitation [13H] is substantially the same as limitation [9D]. Accordingly, for the reasons I discussed in §§VI.C.5, VI.B.7, the combination of Uczekaj and Jiang discloses "*allowing access to the received sensed flight performance data only with the associated pilot identification information*" [13H].

E. Dependent Claims

1. Claims 2, 3, and 12

271. Claims 3 and 12, reproduced below, recite substantially identical subject matter. Claim 3 depends from claim 2 (reproduced below) which merely recites that the "*transceiver is portable*." The combination of Uczekaj and Jiang renders these claims obvious.

> 2. The aircraft of claim 1, wherein the transceiver is portable.
>
> 3. The aircraft of claim 2, wherein the transceiver is a smartphone.
>
> 12. The system of claim 9, wherein the transceiver is a smartphone.

272. As I discussed in §VI.B.6.a, Uczekaj's non-certified device is the recited "*transceiver*." Exemplary non-certified devices include, but are not limited to, "cell phones, smart phones, BLACKBERRY mobile communications devices, IPADs, IPODs, IPHONEs, laptops, table PCs, and similar mobile computing

platforms." (DJI-1010, 1:50-54.) Thus, Uczekaj discloses "*the transceiver is portable*" [2] and "*the transceiver is a smartphone*" [3]/[12].

2. Claims 4 and 5

273. Claims 4 and 5, reproduced below, are directed to data uploaded to the avionics system. The combination of Uczekaj and Jiang renders these claims obvious.

> 4. The aircraft of claim 1, wherein the transceiver is configured to upload data to the avionics system via the wireless transmitter.
>
> 5. The aircraft of claim 4, wherein the uploaded data is a flight planning data.

274. Uczekaj discloses a flight planning application, illustrated in Figure 9 below, through which "a pilot creates or updates a flight plan on a mobile, non-certified device." (DJI-1010, 8:23-24.) The non-certified device "connects to the gateway wirelessly, via WiFi or BlueTooth." (DJI-1010, 8:25-26.) The software application on the non-certified device then "sends a request to the gateway indicating a new (or updated) flight plan (this can be initiated automatically by the software application, or manually by input from the pilot)." (DJI-1010, 8:28-31.) Thus, Uczekaj discloses "*the transceiver is configured to upload data to the avionics system via the wireless transmitter*" [4] and "*the uploaded data is a flight planning data*" [5].

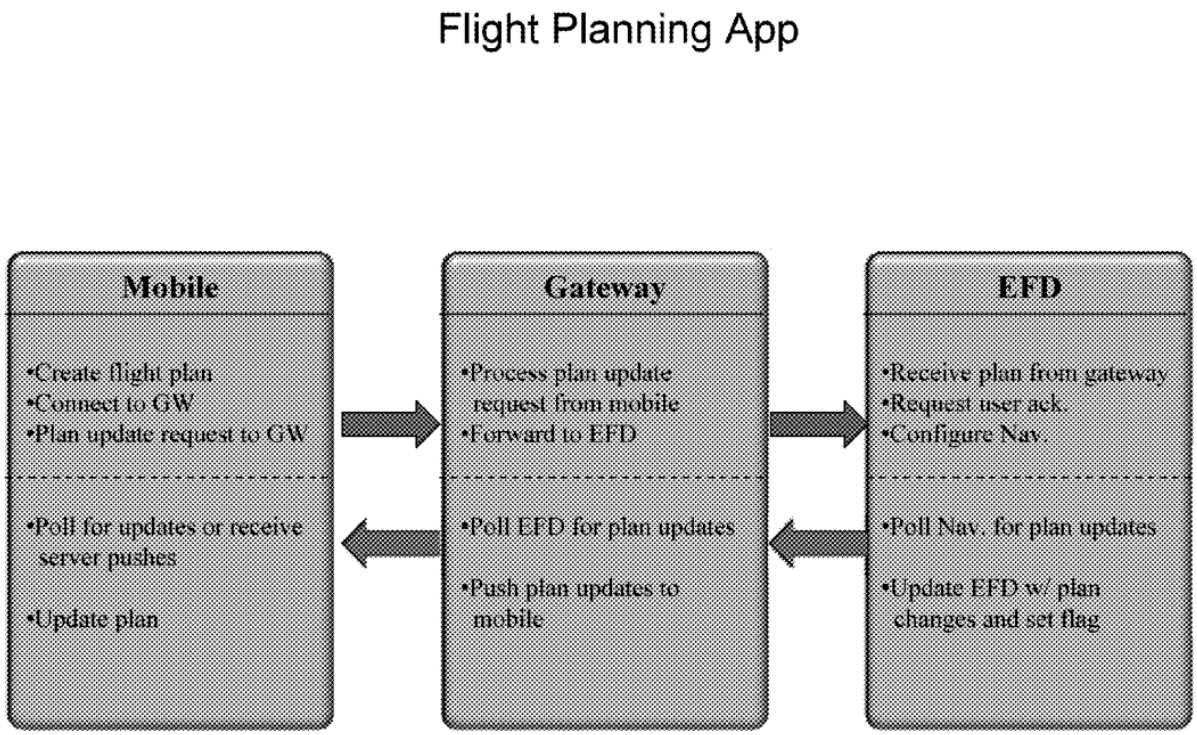

Flight plan synchronized across mobile device, EFD, and Nav.

Uczekaj, Figure 9

3. Claim 8

275. The combination of Uczekaj and Jiang renders claim 8 (reproduced below) obvious.

> 8. The aircraft of claim 1, wherein the transceiver is configured to receive and store aircraft flight performance data.

276. During operation of Uczekaj's logbook application executing on the non-certified device, the "application sends a request to the gateway to initiate logging." (DJI-1010, 10:63-64.) After acknowledgement of the request, the gateway forwards the aircraft performance data "on to the non-certified device for

storage." (DJI-1010, 11:4-6.) Uczekaj's logbook application "records pilot hours and aircraft performance data." (DJI-1010, 10:62-63.) Thus, the combination of Uczekaj and Jiang discloses "*the transceiver is configured to receive and store aircraft flight performance data*" [8].

4. Claim 11

277. The combination of Uczekaj and Jiang renders claim 11 (reproduced below) obvious:

> 11. The system of claim 10, wherein the transceiver is configured to wirelessly receive information from the wireless transmitter.

278. The gateway ("*the wireless transmitter*"), illustrated in Figure 1 below, provides "a wireless link to non-certified devices via WiFi (IEEE 802.11a/b/g/n)." (DJI-1010, 4:57-59.) Thus, the combination of Uczekaj and Jiang discloses "*the transceiver is configured to wirelessly receive information from the wireless transmitter*" [11].

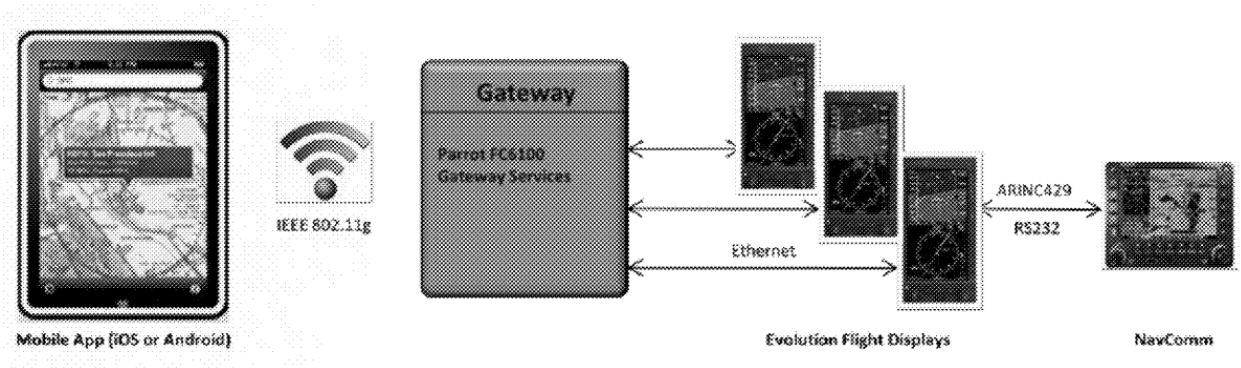

Uczekaj, Figure 1

5. Claim 14

279. The combination of Uczekaj and Jiang renders claim 14 (reproduced below) obvious:

> 14. The method of claim 13, wherein the transmitting by the transceiver of the associated sensed flight performance data and pilot identification information includes wirelessly transmitting the associated sensed flight performance data and pilot identification information to the database.

280. In Jiang, after termination of the flight, the pilot log data is downloaded to a Ground Station processing station. (DJI-1011, 5:53-57.) As discussed in §§VI.A.3, VI.B.4.b, in the combination of Uczekaj and Jiang, the logbook data is downloaded from Uczekaj's non-certified device to the ground station of Jiang. Uczekaj's non-certified devices include "any mobile communications device" such as "cell phones, smart phones, BLACKBERRY mobile communications devices, IPADs, IPODs, IPHONEs, laptops, tablet PCs, and similar mobile computing platforms. Indeed, non-certified mobile devices." (DJI-1010, 1:50-54.) The wireless connectivity of the non-certified device "is provided via a WiFi network (e.g., 802.11 a/b/g/n), 3G/4G mobile telecommunications network, iridium satellite telecommunications network, BLUETOOTH, or similar." (DJI-1010, 3:22-28.) A POSITA would have therefore understood that the download of logbook data is performed via the wireless

connectivity of the non-certified device. Thus, the combination of Uczekaj and Jiang discloses "*the transmitting by the transceiver of the associated sensed flight performance data and pilot identification information includes wirelessly transmitting the associated sensed flight performance data and pilot identification information to the database*."

6. Claim 16

281. Claim 16 is reproduced below:

> 16. The method of claim 13, wherein the non-volatile memory card is an SD card.

282. Uczekaj discloses that the gateway includes an "additional external memory interface (e.g., a memory card)." (DJI-1010, 6:34-37.) In an exemplary preferred embodiment, illustrated in Figure 5 below, in the combination of Uczekaj and Jiang "the gateway includes two SD card slots for internal data storage." (DJI-1010, 7:21-22.) A POSITA would have been motivated to use an SD card as the external memory interface of Uczekaj's gateway because SD cards were well-known and standardized long before the '950 patent. (*See* DJI-1019.) Thus, the combination of Uczekaj and Jiang discloses "*the non-volatile memory card is an SD card*" [16].

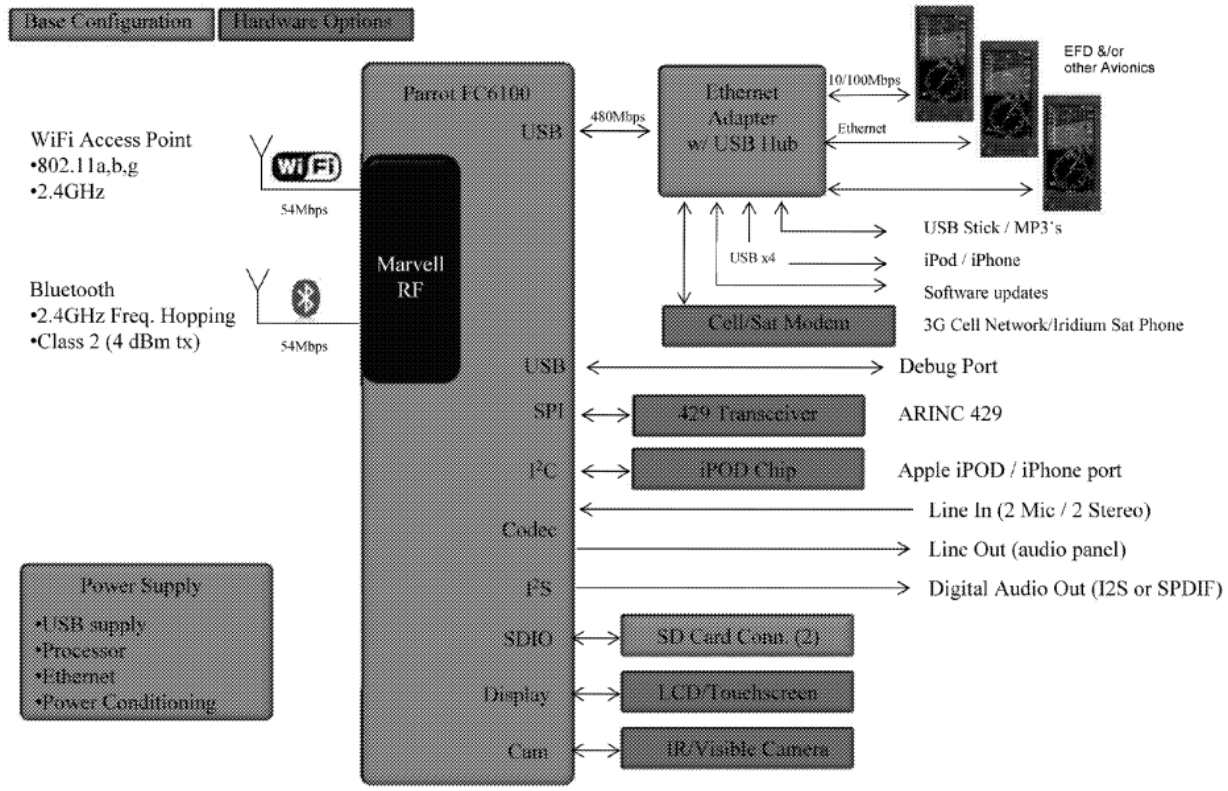

Uczekaj, Figure 5

VII. GROUND 4: The combination of Uczekaj, Jiang and Greubel renders claims 1-5, 8-9, 11-14 and 16 obvious.

283. As I discussed in §IV, the combination of Uczekaj and Jiang discloses every limitation of independent claims 1, 9 and 13 and their respective dependent claims 2-5, 8, 11-12, 14 and 16. Should PO argue the limitation "*transceiver having a transceiver identity associated with pilot identification information*" [1E.3]/[9C.2]/[13D] requires association of the transceiver identity with pilot identification information in a remote database so pilot privacy is

maintained during data transmission, this interpretation is disclosed by Greubel. I provided an overview of Greubel in §V.A.1.

A. Motivation to Combine

284. A POSITA would have been motivated to incorporate Greubel's teachings regarding associating a MAC address with the identity of a vehicle operator as a selectable mode of operation with the combination of Uczekaj and Jiang. For example, a POSITA would have been motivated to add an option to associate the MAC address of the non-certified device carried by the pilot with the pilot identification information in the ground station in the manner taught by Greubel. When this option is selected, data is transmitted from the non-certified device to the ground station with the pilot identification information removed or obscured (e.g., encrypted). A database at the ground station that stores MAC address/pilot identifier associations is subsequently queried to associate the pilot information with the received flight performance data, as taught by Greubel. The addition of this mode of operation allows a pilot, airline, or other entity to select whether to provide or obscure pilot information in the messages sent from the aircraft.

285. A POSITA would have been further motivated to combine Greubel's teachings with Uczekaj and Jiang to meet confidentiality goals set forth by the FAA at part of the FOQA program. Specifically, the FAA states that "[d]ata that

could be employed to determine flight crewmember identity are removed from view in the electronic record as part of the initial processing of the airborne data." (DJI-1018, 8; *see also* DJI-1024, ¶¶14-15.) The only person that has the ability to associate the flight data with an individual is a "gatekeeper" designated by the pilot union's flight safety team. (DJI-1018, 4, 8, 31; DJI-1024, ¶15.) A POSITA would have been further motivated to make the above combination to improve the confidentiality and privacy of sensitive data. A POSITA would have therefore been motivated to make the above combination to improve the confidentiality and privacy of sensitive pilot data. A POSITA would have further recognized that enhanced pilot confidentiality would improve pilot perception of FOQA which is a voluntary safety program and would, in turn, increase adoption of the program.

286. A POSITA would have been motivated to combine Greubel with Uczekaj and Jiang because Greubel is in the same general field of endeavor as the '950 patent—monitoring, analysis, and feedback of the performance of a vehicle and its operator. Greubel is also reasonably pertinent to the problem addressed in the '950 patent—improved techniques for monitoring and analyzing aircraft flight performance data. (*See* DJI-1001, Abstract, 2:11-13.) 273.)

287. Greubel's system, used in fleet management, similarly associates vehicle data with the driver. (*See, e.g.*, DJI-1009, 8:11-19.) These fleet management systems are designed to evaluate driver performance. (DJI-1025, DJI-

1026.) Also, while the claims of the '950 patent are directed to aircraft and aircraft systems, the specification makes it clear that the alleged invention is applicable to other types of vehicles, "It will be appreciated that the features of system 301 discussed herein are hereby incorporated in aircraft 101 , 201 , and other similarly suitable aircraft and / or vehicles." (DJI-1001, 3:1-4.)

B. Independent Claims

288. The combination of Uczekaj and Jiang discloses "*the transceiver having a transceiver identity associated with pilot identification information*" limitation of the independent claims as discussed below. For the reasons I discussed in §§VI.B, C, D, the combination of Uczekaj, Jiang, and Greubel discloses the remaining limitations of the independent claims.

289. As I discussed in §VI.B.6.c, a MAC address is an identifier assigned to a networking device, such as the portable device in the combination of Uczekaj, Jiang, and Greubel, and is therefore a "*transceiver identity.*" In the combination that I discussed above, the MAC address of a portable device is registered with ground server to associate the pilot with the portable device in the database, as taught by Greubel. (*See* DJI-1009, 1:57-60.) Subsequently, when data is received from the portable device which was carried onto the aircraft (vehicle), the ground server "match[es] the MAC address" to the pilot identifier and logs the MAC

address and/or pilot identifier in the database with the flight data, as taught by Greubel. (*See* DJI-1009, 8:11-15.)

290. Thus, the combination of Uczekaj, Jiang, and Greubel discloses the "*transceiver having a transceiver identity associated with pilot identification information*" in the remote database. [1E.3]/[9C.3]/[13D].

C. Dependent Claims

291. For the above reasons, and the reasons I discussed in §VI.E, the combination of Uczekaj, Jiang, and Greubel renders dependent claims 2-5, 7-8, 10-12, 14 and 16 obvious.

VIII. GROUND 5: The combination of Warner, Wakutsu, Shavit, and Uczekaj discloses the limitations of Claims 4-5.

292. The combination of Warner, Wakutsu, and Shavit renders claims 4 and 5 obvious, as discussed in §IV.E.2. Should an argument be made that Warner does not teach uploading a flight plan, this feature is disclosed by Uczekaj, as discussed in §VI.3.2 above.

293. A POSITA would have been motivated to combine Uczekaj's flight plan application with the combined system of Warner, Wakutsu, and Shavit. Warner suggests the combination, teaching that the pilot's portable device "has access to flight plan … in the pre-flight stage." (DJI-1005, 6:14-15, Figure 4; DJI-1006, 5:31-32, Figure 4.) Warner further teaches that the pilot tablet/EFB supports

multiple applications. Warner discloses that "[d]uring aircraft operation (based upon customer selections) a data stream can be preferably accessed by **other applications running on the same EFB** which display, analyze and interact with customer commands (e.g., FOQA, Vibration Analysis, medical charting software)." (DJI-1005, 10:41-45; DJI-1006, 11:20-23; *see also*, DJI-1005, 8:43-45; DJI-1006, 9:3-4 (recorded data "is preferably made available to **other software programs** the customer wishes to run").) Based on these suggestions, a POSITA would have been motivated to implement a flight plan application, as taught by Uczekaj, on the EFB of Warner, Wakutsu, and Shavit.

294. The combination of Warner, Wakutsu, Shavit, and Uczekaj therefore discloses "*the transceiver is configured to upload data to the avionics system via the wireless transmitter*" [4] and "*the uploaded data is a flight planning data*" [5].

IX. CONCLUSION

295. In signing this declaration, I recognize that the declaration will be filed as evidence in a contested case before the Patent Trial and Appeal Board of the United States Patent and Trademark Office. I also recognize that I may be subject to cross-examination in the case and that cross-examination will take place within the United States. If cross-examination is required of me, I will appear for cross-examination within the United States during the time allotted for cross-examination.

I hereby declare that all statements made herein of my own knowledge are true and that all statements made on information and belief are believed to be true; and further that these statements were made with the knowledge that willful false statements and the like so made are punishable by fine or imprisonment, or both, under Section 1001 of Title 18 of the United States Code.

Executed this 27th day of July in Grand Junction, Colorado.

Respectfully submitted,

Charles Reinholtz

EXHIBIT LIST

Exhibit	Reference
1001	U.S. Patent 10,275,950 to Girard et al. ("the '950 patent")
1002	File History for U.S. Patent 10,275,950
1005	U.S. Patent 9,563,580 to Warner, et al ("Warner")
1006	U.S. Provisional Application 61/858,444 to Warner, et al ("Warner-Prov")
1007	WO 2012/105083 to Wakutsu, et al ("Wakutsu")
1008	U.S. Patent Publication 2011/0241902 to Shavit ("Shavit")
1009	U.S. Patent 9,402,174 to Greubel ("Greubel")
1010	U.S. Patent 9,141,830 to Uczekaj, et al ("Uczekaj")
1011	U.S. Patent 6,278,913 to Jiang ("Jiang")
1012	Infringement Contentions (Exhibit A) in *Textron Innovations Inc. v. SZ DJI Technology Co., Ltd.*, 2-22-cv-00351 (EDTX)
1013	Peters, et al, "ISR-Eagle: Unmanned Aerial Systems Competition Report", Student Unmanned Aerial Systems (SUAS) Competition Journal Papers (May 23, 2011)
1014	Koh, "Digital Memory Card Market and Technology", 2005 Conference on High Density Microsystem Design and Packaging and Component Failure Analysis (June 27-29, 2005)
1015	U.S. Department of Transportation, Federal Aviation Administration, AC No: 120-76B, "Guidelines for the Certification, Airworthiness, and Operational Use of Electronic Flight Bags"
1016	GE Intelligent Platforms, "ARINC Protocol Tutorial" (2010)
1017	SD Association, Press Release, "SD Association Adds Standardized Wireless Communication to Work-Leading SD Memory Card Standards" (January 9, 2012)
1018	U.S. Department of Transportation, Federal Aviation Administration, AC No: 120-82, "Flight Operational Quality Assurance" (April 12, 2004)

Exhibit	Reference
1019	SD Association, "SD Specifications Part 1: Physical Layer Simplified Specification", Version 4.1 (January 22, 2013)
1020	Excerpt from IEEE Dictionary
1021	Gast, "802.11 Wireless Networks: The Definitive Guide", O'Reilly (2002)
1022	O'Hara, et al, "IEEE 802.11 Handbook: A Designer's Companion" (IEEE Press 1999)
1023	U.S. Patent 8,495,722 to McCusker
1024	U.S. Patent Publication 2007/0219831 to Ne'meth
1025	U.S. Patent 8,626,568 to Warkentin, et al.
1026	U.S. Patent Publication 2012/0194679 to Nehowig, et al.

ACRONYM LIST/GLOSSARY

AC: advisory circular from the FAA

ACMS: Aircraft Condition Monitoring System

ADIRS: Air Data Inertial Reference System. The ADIRS computes the aircraft's position, speed, altitude, attitude, and air data for the displays, flight management guidance system, flight controls, engine controls, and other systems.

AFDTD: Air-Ground Data Transmitting Device

AHRS: Attitude And Heading Reference System

ARINC 429, avionics data bus technical standard

ARINC: Aeronautical Radio, Incorporated. ARINC is an aerospace standard that defines the characteristics of data transference inside aerospace avionic devices.

ATC: Air Traffic Control

CV2R: Cockpit Voice and Video Recorder

DMU: Data Management Unit (DMU). A unit that performs the same data conversion functions as an (FDAU), with the added capability to process data onboard the aircraft.

EFB: Electronic Flight Bag

EFD: Evolution Flight Display. The EFD is a Multi-function Flight Display (MFD) available from ASPEN AVIONICS

FAA: Federal Aviation Administration

FADEC: Full Authority Digital Engine Control. FADEC is a system consisting of a digital computer, called an electronic engine controller (EEC) or engine control unit (ECU), and its related accessories that control all aspects of aircraft engine performance.

FDAU: Flight Data Acquisition Unit

FDR: Flight Data Recorder

FMT: FOQA Monitoring Team

FQQA: Flight Operational Quality Assurance

GDRAS: Ground Data Replay and Analysis System

GPS: Global Positioning System

I&O Plan: Implementation and Operations

LFL: Logical Frame Layout

LRU: line replaceable unit, a line-replaceable unit is a modular component of an airplane, ship or spacecraft that is designed to be replaced quickly at an operating location.

MAC Address: media access control address

NAND Flash Memory: A type electronic non-volatile computer memory storage medium that can be electrically erased and reprogrammed.

QAR: Quick Access Recorder

OAT: Outside Air Temperature

SMA connector: Subminiature version A connector

SQL: Structured Query Language

TSFD: Time-Stamped Flight Data

UAS: Unmanned Aerial System

UAV: Unmanned Aerial Vehicle

VEMD: Vehicle and Engine Monitoring Display

WAAS: Wide Area Augmentation System for improving accuracy of GPS