US010275950B2

(12) **United States Patent**
Girard et al.

(10) **Patent No.: US 10,275,950 B2**
(45) **Date of Patent: Apr. 30, 2019**

(54) **AVIONICS SYSTEM ADAPTED FOR EMPLOYING SMARTPHONE TO INPUT-OUTPUT FLIGHT DATA**

(71) Applicant: **BELL HELICOPTER TEXTRON INC.**, Fort Worth, TX (US)

(72) Inventors: **William D. Girard**, Euless, TX (US); **Brian E. Tucker**, Fort Worth, TX (US)

(73) Assignee: **Bell Helicopter Textron Inc.**, Fort Worth, TX (US)

(*) Notice: Subject to any disclaimer, the term of this patent is extended or adjusted under 35 U.S.C. 154(b) by 202 days.

(21) Appl. No.: **13/951,900**

(22) Filed: **Jul. 26, 2013**

(65) **Prior Publication Data**

US 2015/0032296 A1 Jan. 29, 2015

(51) **Int. Cl.**
G07C 5/00 (2006.01)

(52) **U.S. Cl.**
CPC ***G07C 5/008*** (2013.01)

(58) **Field of Classification Search**
CPC ... H04L 67/12; H04L 67/06; H04L 29/08558; H04L 67/14; H04L 67/18; H04L 67/325
USPC 701/3, 14, 120, 10, 100, 123, 2, 29.1
See application file for complete search history.

(56) **References Cited**

U.S. PATENT DOCUMENTS

6,148,179 A * 11/2000 Wright G08G 5/0013 340/531
6,408,259 B1 * 6/2002 Goebel B64D 43/00 701/100
7,755,890 B2 * 7/2010 Rui B64D 43/00 348/837
7,769,501 B2 * 8/2010 Lusardi G01C 23/00 340/945
8,280,741 B2 * 10/2012 Colin G08G 5/0013 704/231
8,364,328 B2 1/2013 Hedrick
2002/0131730 A1 * 9/2002 Keeble G02B 6/4201 385/92
2002/0140574 A1 * 10/2002 Starkey B60C 23/0413 340/870.16
2004/0148088 A1 * 7/2004 Davis G07C 5/008 701/123
2005/0026609 A1 * 2/2005 Brinkley G06F 8/61 455/431
2007/0236366 A1 * 10/2007 Gur G06K 9/00 340/945
2007/0264953 A1 * 11/2007 Srinivasan H04L 67/06 455/186.1
2008/0228330 A1 * 9/2008 Srinivasan G01C 23/00 701/3
2009/0220929 A1 * 9/2009 Daniel G09B 9/00 434/362

(Continued)

Primary Examiner — Redhwan K Mawari
(74) *Attorney, Agent, or Firm* — James E. Walton

(57) **ABSTRACT**

A system and method configured to monitor aircraft flight performance data. The system includes a wireless transmitter in data communication with an avionics system of the aircraft, a portable wireless transceiver associated with the wireless transmitter, and a wireless database associated with the wireless transmitter. The method includes sensing flight performance data with the sensor, transmitting sensed flight performance data to the wireless transmitter, wirelessly transmitting the sensed flight performance data to the wireless database, and monitoring flight performance data with a display operably associated with the wireless database.

16 Claims, 2 Drawing Sheets

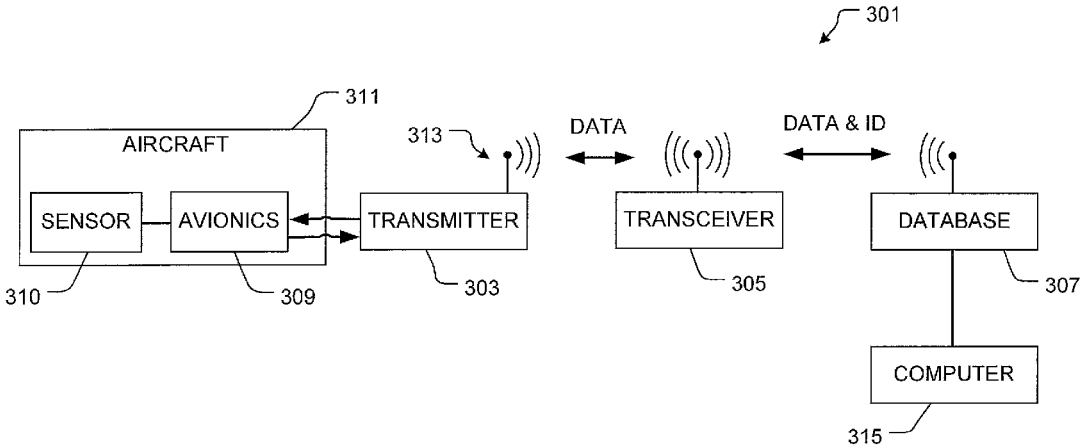

(56) **References Cited**

U.S. PATENT DOCUMENTS

2010/0105329	A1*	4/2010	Durand	G06F 1/1632 455/41.2
2011/0241902	A1*	10/2011	Shavit	G08G 5/0026 340/978
2011/0313645	A1*	12/2011	Shukla	G08G 5/065 701/120
2012/0053777	A1*	3/2012	Meisels	G07C 5/006 701/29.1
2012/0265372	A1*	10/2012	Hedrick	H04L 67/36 701/3
2013/0141572	A1*	6/2013	Torres	H04N 7/185 348/143
2015/0032296	A1*	1/2015	Girard	G07C 5/008 701/3

* cited by examiner

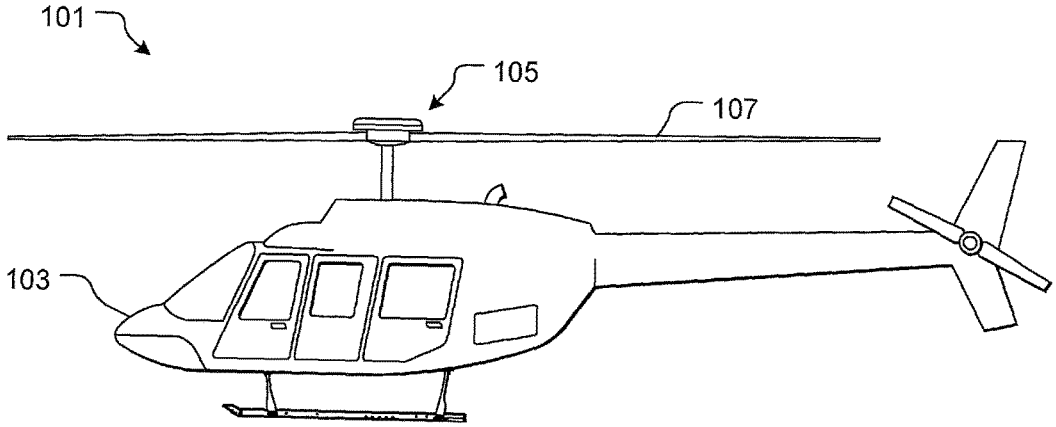
101
105
107
103

FIG. 1

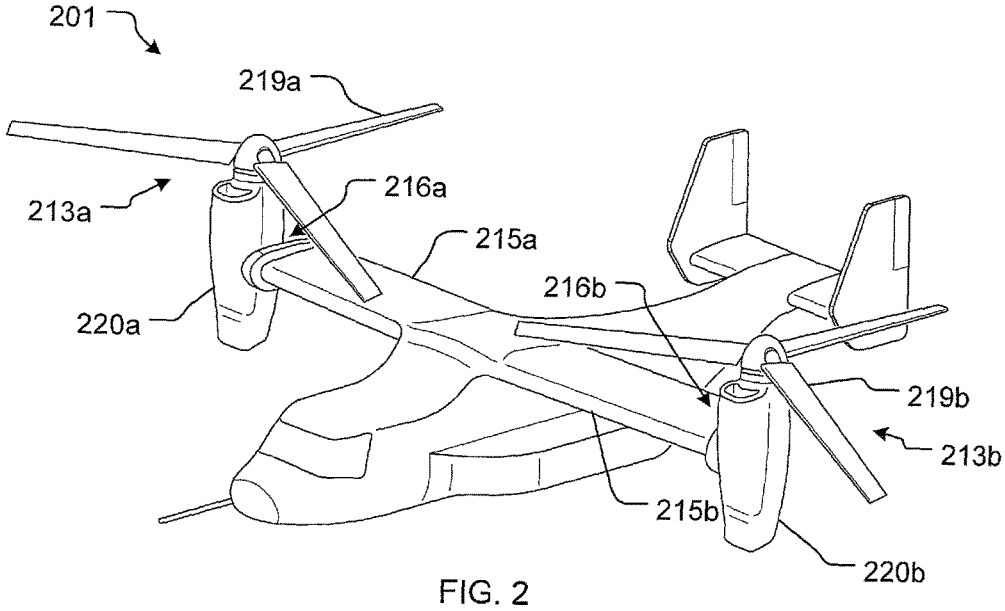
201
219a
213a
216a
215a
220a
216b
219b
213b
215b
220b

FIG. 2

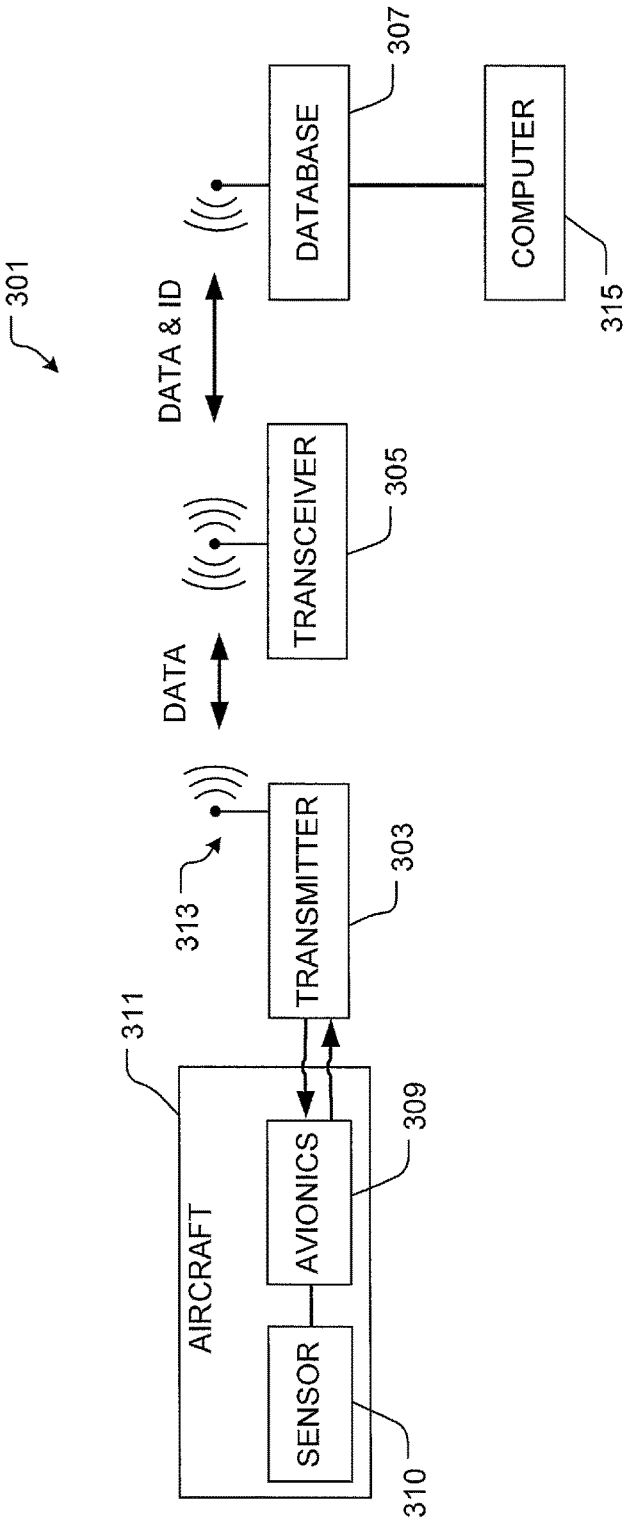
301
AIRCRAFT
311
SENSOR
310
AVIONICS
309
313
TRANSMITTER
303
DATA
TRANSCEIVER
305
DATA & ID
DATABASE
307
COMPUTER
315

FIG. 3

AVIONICS SYSTEM ADAPTED FOR EMPLOYING SMARTPHONE TO INPUT-OUTPUT FLIGHT DATA

BACKGROUND

1. Field of the Invention

The present application relates generally to aircraft avionics systems.

2. Description of Related Art

Aircraft avionics systems are well known in the art for control aircraft maneuverability. Prior to flight, the avionics systems are typically manually programmed with flight planning information. The manual process results in significant downtime, and in some scenarios, can result in mistakes due to incorrect input.

Conventional avionics systems can also be utilized to display and store flight performance information of the aircraft during flight. The information is useful for monitoring the aircraft performance, to assist with maintenance, and to provide feedback during pilot training.

Although the foregoing developments in the above-described system and method represent great strides, many shortcomings remain.

DESCRIPTION OF THE DRAWINGS

The novel features believed characteristic of the embodiments of the present application are set forth in the appended claims. However, the embodiments themselves, as well as a preferred mode of use, and further objectives and advantages thereof, will best be understood by reference to the following detailed description when read in conjunction with the accompanying drawings, wherein:

FIG. **1** is a side view of a helicopter according to a preferred embodiment of the present application;

FIG. **2** is a perspective view of a tiltrotor aircraft according to an alternative embodiment of the present application; and

FIG. **3** is a simplified schematic of the fight performance monitoring, analysis, and feedback system in accordance with the preferred embodiment of the present application.

While the system and method of the present application is susceptible to various modifications and alternative forms, specific embodiments thereof have been shown by way of example in the drawings and are herein described in detail. It should be understood, however, that the description herein of specific embodiments is not intended to limit the invention to the particular embodiment disclosed, but on the contrary, the intention is to cover all modifications, equivalents, and alternatives falling within the spirit and scope of the process of the present application as defined by the appended claims.

DETAILED DESCRIPTION OF THE PREFERRED EMBODIMENT

Illustrative embodiments of the apparatus and method are provided below. It will of course be appreciated that in the development of any actual embodiment, numerous implementation-specific decisions will be made to achieve the developer's specific goals, such as compliance with system-related and business-related constraints, which will vary from one implementation to another. Moreover, it will be appreciated that such a development effort might be complex and time-consuming, but would nevertheless be a

routine undertaking for those of ordinary skill in the art having the benefit of this disclosure.

The system of the present application overcomes problems commonly associated with conventional avionic systems and methods. Specifically, the system includes a transmitter that wirelessly transmits flight performance data from the aircraft avionics system to a wireless database. Further, the system includes a portable wireless transceiver that receives and transmits flight performance data and/or pilot information associated with the flight performance data to the wireless database. The system provides rapid and effective means to monitor the flight performance of the aircraft, and to provide monitoring and training of the pilot. The system is also adapted to upload flight planning information to the avionics system of the aircraft. Further detailed description of these features are provided below and illustrated in the accompanying drawings.

The system and method of the present application will be understood, both as to its structure and operation, from the accompanying drawings, taken in conjunction with the accompanying description. Several embodiments of the system are presented herein. It should be understood that various components, parts, and features of the different embodiments may be combined together and/or interchanged with one another, all of which are within the scope of the present application, even though not all variations and particular embodiments are shown in the drawings. It should also be understood that the mixing and matching of features, elements, and/or functions between various embodiments is expressly contemplated herein so that one of ordinary skill in the art would appreciate from this disclosure that the features, elements, and/or functions of one embodiment may be incorporated into another embodiment as appropriate, unless described otherwise.

Referring now to the drawings wherein like reference characters identify corresponding or similar elements throughout the several views, FIG. **1** depicts an aircraft **101** in accordance with a preferred embodiment of the present application. In the exemplary embodiment, aircraft **101** is a helicopter having a fuselage **103** and a rotor system **105** carried thereon. A plurality of rotor blades **107** is operably associated with rotor system **105** for creating flight.

Although shown associated with a helicopter, it will be appreciated that the system of the present application could also be utilized with different types of rotary aircraft and vehicles. For example, FIG. **2** illustrates a tiltrotor aircraft **201** that utilizes the damper system in accordance with the present application.

Tiltrotor aircraft **201** includes rotor assemblies **213***a* and **213***b* that are carried by wings **215***a* and **215***b*, and are disposed at end portions **216***a* and **216***b* of wings **215***a* and **215***b*, respectively. Tilt rotor assemblies **213***a* and **213***b* include nacelles **220***a* and **220***b*, which carry the engines and transmissions of tilt rotor aircraft **201**, as well as, rotor proprotors **219***a* and **219***b* on forward ends **221***a* and **221***b* of tilt rotor assemblies **213***a* and **213***b*, respectively. Tilt rotor assemblies **213***a* and **213***b* move or rotate relative to wing members **215***a* and **215***b* between a helicopter mode in which tilt rotor assemblies **213***a* and **213***b* are tilted upward, such that tilt rotor aircraft **201** flies like a conventional helicopter; and an airplane mode in which tilt rotor assemblies **213***a* and **213***b* are tilted forward, such that tilt rotor aircraft **201** flies like a conventional propeller driven aircraft.

FIG. **3** shows a simplified schematic of system **301** according to the preferred embodiment of the present application. System **301** preferably includes one or more of a

transmitter **303**, a transceiver **305**, and a database **307**. It will be appreciated that the features of system **301** discussed herein are hereby incorporated in aircraft **101**, **201**, and other similarly suitable aircraft and/or vehicles.

Transmitter **303** is in data communication with an avionics system **309** associated with aircraft **311**. During operation, a sensor **310** associated with avionics system **309** senses performance data of aircraft **311** during flight, which in turn is received, stored, and transmitted to transceiver **305**.

In the preferred embodiment, transmitter **303** is a Secure Digital (SD) or a non-volatile memory card that is configured to receive, store, and/or transmit data to and from avionics system **309**. To facilitate transmission, transmitter **303** includes a wireless device **313** configured to transmit data to and from transceiver **305**. It will be appreciated that transmitter **303** could also be configured to fit within transceiver **305**, e.g., a mini SD card fitted within a smartphone and/or portable tablet.

In the contemplated embodiment, transceiver **305** is a portable smartphone and/or tablet configured to receive data from transmitter **313** and relay the data to database **307**. Transceiver **305** is also contemplated having a touch or voice key entry feature that enables a user to enter information to be relayed to avionics system **309** and/or database **307**. For example, the pilot identification information associated with the flight performance data can be sent together to database **307**.

Database **307** is configured to store data from transmitter **303** and can be operably associated with a computer **315** for viewing and analysis of the data via a computer display (not shown). In an alternative embodiment, database **307** could be adapted to send and receive data directly from transmitter **303**, thereby eliminating the need for transceiver **305**. It will be appreciated that database **307** could be configured to automatically populate aircraft and pilot logbooks with data received from the aircraft, e.g., flight hours, landings, and so forth. Conventional methods include the process of manually keeping the logbooks, and the above method would reduce the record-keeping burden and reduce the manual entry errors.

One feature believed unique to the present application is utilizing wireless means to transfer secured information from avionics system **309** to database **307**. This process is achieved enables rapid and efficient means to convey data with little to no flight downtime. It should be understood that there are many different means of wireless communications that are contemplated, including, but not limited to, radio waves such as Bluetooth technology, cellular, Wi-Fi, Near Field Communication, and so forth. It is contemplated utilizing short-range wireless communication from transmitter **303** to transceiver **305** and utilizing long-range communication from transceiver **305** to database **307**.

In one contemplated method of utilizing system **301**, transmitter **303**, with wireless communication capabilities, is inserted into the avionics system **309** prior to flight. Data, such as flight performance data, is written to transmitter **303** during flight, and once the flight is over, the user can then download the data directly to transceiver **305** or command the data to be sent directly to database **307**, e.g, internet share or network. Once received by database **307**, the user can analyze the data using third party software via computer **315**.

In an alternative method, transmitter **303** could be configured to facilitate automatic download of flight performance data to either transceiver **305** and/or database **307** after flight.

It is also contemplated utilizing system **301** to upload flight planning data to avionics system **309**. For example, a user can enter flight planning on transceiver **305** and/or other devices in communication with transmitter **303**. The use can either wirelessly transmit the flight planning data to transmitter **303** or connect transmitter **303** directly to transceiver **305** and then thereafter connect transmitter **303** directly to avionics system **309**. The user can then upload the flight planning information to avionics system **309**. It will be appreciated that this process eliminates the need to manually enter flight planning information on avionics system **309**, which commonly results in entry error.

It will be appreciated that system **301** provides the necessary link to facilitate the automatic download and/or upload of data to onboard avionics, without the need for specialized and dedicated onboard hardware. Also, the method of utilizing system **301** eliminates errors that can be caused by manual entry of flight planning information.

It will also be appreciated that the wireless connectivity discussed herein alleviates the need to remove/replace memory cards often, allows for easier integration with online/internet analysis solutions, improves user experience by integrating common devices into the solution. Another advantage of system **301** is that it uses non-aviation/off-board communication devices, e.g., transmitter **305** and computer **315**, as the primary method, which allows for easier upgrades/improvements in hardware and software, as minimal qualification are required. Since the wireless communications is occurring through a standardized and controlled interface, e.g., writing data to transmitter **303**, the onboard system is protected from malicious attacks to hardware through the wireless interface. The method also allows the data to be associated with the pilot/user via the transceiver **305** identity, removing the need for additional log-in and improve security with individual, unique pilot ID information.

In an alternative embodiment, it is contemplated utilizing a cable as means for data communication between transmitter **303** and avionics system **309**. This embodiment could be utilized in aircraft that does not include ports for transmitter **303**, e.g., a SD card port.

Utilizing system **301** as a training exercise is another contemplated method of use. For example, after flight, the flight performance information is sent to database **307** by one or more means discussed above, then thereafter reviewed by a flight instructor. Thereafter, the flight instructor can provide feedback based upon the flight performance data. It should be appreciated that one advantage of this method is to protect the privacy of the pilot's data so that only the instructor has access in lieu of multiple pilots having access. Confidentiality is often a requirement for many of the flight data monitoring programs normally imposed by pilot unions.

In one contemplated embodiment, computer **315** and transceiver **305** can be configured to communication directly with each other to provide feedback via automated rules. For example, computer **315** can process the data stored in database **307** and then transmit the analysis directly to the pilot on transceiver **305**. This could take the form of individual events, e.g., "at 07:45, you conducted a banked turn of more than 30 degrees", and/or through use of a scoring system such as a safety score, e.g., "Your Safety Score for this flight was an A; no negative conditions were found."

It is apparent that a system and method with significant advantages has been described and illustrated. The particular embodiments disclosed above are illustrative only, as the

embodiments may be modified and practiced in different but equivalent manners apparent to those skilled in the art having the benefit of the teachings herein. It is therefore evident that the particular embodiments disclosed above may be altered or modified, and all such variations are considered within the scope and spirit of the application. Accordingly, the protection sought herein is as set forth in the description. Although the present embodiments are shown above, they are not limited to just these embodiments, but are amenable to various changes and modifications without departing from the spirit thereof.

What is claimed is:

1. An aircraft, comprising:

a sensor configured to sense flight performance of the aircraft during flight;

an avionics system associated with the sensor, the avionics system comprising:

a memory card interface;

a database in data communication with the sensor and the avionics system, the database being configured to store information relating to a pilot flying the aircraft during flight and the flight performance of the aircraft during flight;

a wireless transmitter having memory, the wireless transmitter in data communication with the avionics system and the database, the wireless transmitter comprising a non-volatile memory card coupled to the memory card interface of the avionics system; and

a transceiver comprising an input device, the transceiver having a transceiver identity associated with pilot identification information, the transceiver being configured for receiving information relating to sensed flight performance from the wireless transmitter, for associating the thus received information with the pilot identification information associated with the transceiver identity, and for transmitting the received information with the thus associated pilot identification information to the database;

wherein the transceiver is a wireless transceiver in data communication with the wireless transmitter;

wherein the wireless transceiver is configured to wirelessly receive and transmit aircraft flight performance data to the database;

wherein the stored sensed flight performance is only accessible with the associated pilot identification information;

wherein the avionics system is configured to monitor aircraft flight performance data from the sensor; and

wherein the pilot identification information is entered directly into the input device of the transceiver.

2. The aircraft of claim **1**, wherein the transceiver is portable.

3. The aircraft of claim **2**, wherein the transceiver is a smartphone.

4. The aircraft of claim **1**, wherein the transceiver is configured to upload data to the avionics system via the wireless transmitter.

5. The aircraft of claim **4**, wherein the uploaded data is a flight planning data.

6. The aircraft of claim **1**, wherein the wireless transmitter removably attaches to the wireless transceiver.

7. The aircraft of claim **1**, wherein the wireless transmitter removably attaches to the avionics system, the non-volatile memory card being an SD card.

8. The aircraft of claim **1**, wherein the transceiver is configured to receive and store aircraft flight performance data.

9. An aircraft flight performance monitoring system, comprising:

a wireless transmitter having memory, the wireless transmitter in data communication with an avionics system of an aircraft, the avionics system comprising a memory card interface and the wireless transmitter comprising a non-volatile memory card coupled to the memory card interface of the avionics system;

a database in data communication with the avionics system, the database being configured to store information relating to a pilot flying the aircraft during flight and flight performance of the aircraft during flight;

a transceiver comprising an input device; the transceiver having a transceiver identity associated with pilot identification information, the transceiver being configured for receiving information relating to sensed flight performance from the wireless transmitter, for associating the thus received information with the pilot identification information associated with the transceiver identity, and for transmitting the received information with the thus associated pilot identification information to the database;

wherein the stored sensed flight performance is only accessible with the associated pilot identification information;

wherein the wireless transmitter is configured to receive and transmit flight performance data from the avionics system to the transceiver, which in turn is transmitted to the database; and

wherein the pilot identification information is entered directly into the input device of the transceiver.

10. The system of claim **9**, wherein the wireless transmitter removably attaches to the avionics system.

11. The system of claim **10**, wherein the transceiver is configured to wirelessly receive information from the wireless transmitter.

12. The system of claim **9**, wherein the transceiver is a smartphone.

13. A method to monitor aircraft flight performance data, comprising:

providing an avionics system comprising:

a sensor for sensing flight performance data; and

a memory card interface;

sensing flight performance data with the sensor;

providing a wireless transmitter comprising:

memory; and

a non-volatile memory card configured for coupling to the memory card interface of the avionics system;

transmitting the sensed flight performance data to a transceiver having a transceiver identity associated with pilot identification information;

entering the pilot identification information directly on the transceiver;

associating, by the transceiver, the sensed flight performance data received from the wireless transmitter with the pilot identification information associated with the transceiver identity;

transmitting, by the transceiver, the received sensed flight performance data with the associated pilot identification information to a database; and

allowing access to the received sensed flight performance data only with the associated pilot identification information.

14. The method of claim **13**, wherein the transmitting by the transceiver of the associated sensed flight performance data and pilot identification information includes wirelessly

transmitting the associated sensed flight performance data and pilot identification information to the database.

15. The method of claim **14**, further comprising:

removably attaching the wireless transmitter to the transceiver.

16. The method of claim **13**, wherein the non-volatile memory card is an SD card.

* * * * *