This claim chart shows on an element-by-element basis how DJI directly infringes Claims 1, 2, 3, 4, 5, 8, 9, 12, 13, 14 and 16 under U.S.C. § 271(a) by making, using, selling, offering to sell, or importing into the United States of DJI drones in combination with the corresponding mobile applications or controllers (e.g., the DJI GO app, DJI Smart Controller, N3 Flight Controller, DJI RC, DJI RC Pro, DJI FPV RC 2, Mini 2/3 RC, DJI GO 4, DJI Fly, DJI Pilot, and DJI Pilot PE applications), including but not limited to the DJI Air 2S, Phantom 3 Standard, DJI FPV, Phantom 3 Professional, Phantom 3 Advanced, Phantom 3 4K, Phantom 4, Phantom 4 Pro, Mavic Pro, Phantom 2 Vision+, Phantom FC40, Phantom 1, Phantom 3 SE, Phantom 4 Advanced, Spark, Mavic Pro Platinum, Mavic Air, Phantom 4 Pro V2.0, Mavic 2, Osmo Pocket, Mavic Mini, Mavic Air 2, Mavic Air 3, DJI Mini 3, DJI Mini 3 Pro, DJI Mini 2, DJI Mini SE, Inspire 1, Inspire 1 Pro/Raw, and Inspire 2, and all similar models that cause the drones to operate in the manner set forth below (collectively, the "Accused DJI Drones").

TII contends that DJI indirectly infringes Claims 1, 2, 3, 4, 5, 8, 9, 12, 13, 14, and 16 under 35 U.S.C. § 271(b) by actively and knowingly encouraging, inducing, instructing, and/or advertising direct infringement by others, including but not limited to OEMs, subsidiaries, affiliates, customers, and/or end users. DJI's acts of induced infringement include, but are not limited to, the continued marketing and selling of the Accused DJI Drones, continued provision of updates to DJI's flight software, and the provision of marketing and promotional materials, instruction manuals, product manuals, instructional videos, and technical information that is intended to induce, and does induce, DJI's end users to use DJI's drones to monitor and log flight performance, flight planning, and flight log data according to the manner set forth in the chart below. *See* TII_0000001-TII_0001943.

TII further contends that DJI indirectly infringes Claims 1, 2, 3, 4, 5, 8, 9, 12, 13, 14, and 16 under 35 U.S.C. § 271(c) by selling or importing the hardware and software for the Accused DJI Drones into the United States which constitute a material part of the invention, knowing the Accused DJI Drones to be especially made to operate in the manner set forth below. For example, DJI actively contributes to the infringement of the claims through the promotion and/or sales of the infringing drones, by training its customers how to use the Accused DJI Drones in an infringing manner, and through the provision of associated flight software from smartphone app stores, which together enable monitoring and logging flight performance, flight planning, and flight log data according to the manner set forth in the chart below. *See* TII_0000001-TII_0001943. DJI knows the accused features to have no substantial non-infringing uses and conducts its activities with full knowledge that those features are intended to be used, and are used, by DJI's end users to infringe the claims in the manner set forth in the chart below.

The claim chart against DJI's drones with the Waypoints and/or Course Lock features is provided as a non-limiting, representative example of DJI's infringement and is based on publicly available information currently available to TII. TII notes that discovery has not yet commenced, and the Court has not construed any claim terms. Accordingly, TII expressly reserves the right to modify, supplement, or amend these contentions as additional evidence and information becomes available through discovery.

DJI-1012
IPR2023-01107

Throughout this chart, TII cites to exemplary evidence supporting TII's infringement allegations. These citations are provided as illustrations to identify the accused functionality and should not be construed to limit the evidence TII may rely upon.

The claim charts below show that the Accused DJI Drones literally infringe each element of each asserted claims. To the extent any element is argued to not literally be present in the Accused DJI Drones, the chart below demonstrates that each element is also infringed under the Doctrine of Equivalents because the accused functionality does substantially the same thing, in substantially the same way, and to achieve substantially the same result, as the manner required by the asserted claims.

Claim Limitation	Evidence of the Accused DJI Drones
1[pre] An aircraft, comprising:	If the preamble is limiting, each of the Accused DJI Drones are an aircraft that satisfies the below-recited limitations. 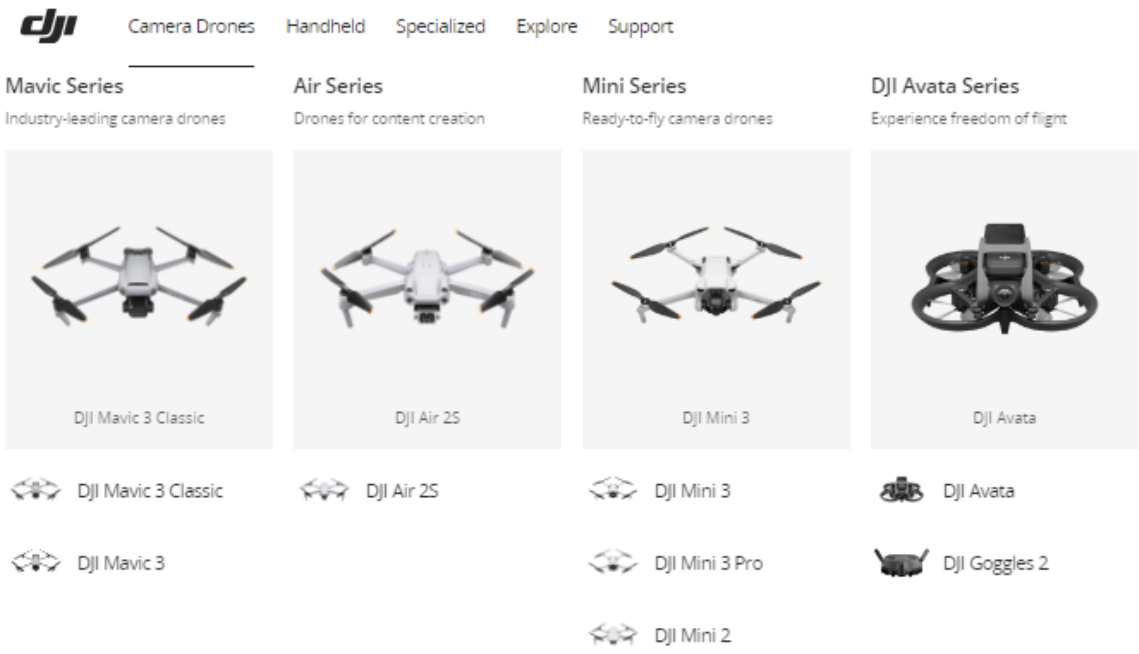

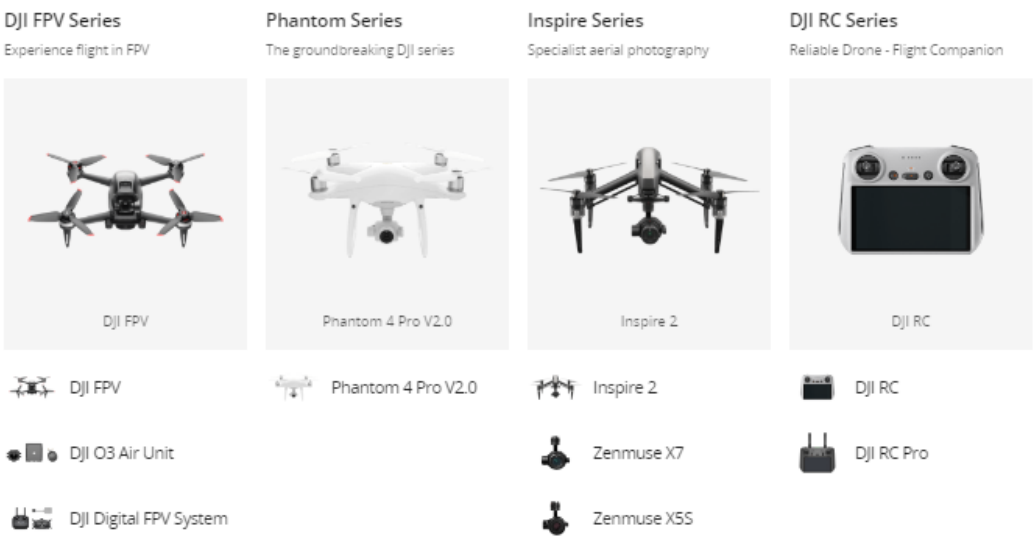

https://www.dji.com/camera-drones?site=brandsite&from=nav

	https://youtu.be/6dnqGrSKudM?t=13 **Aircraft** DJI Mavic 3 contains a flight controller, video downlink system, vision systems, infrared sensing system, propulsion system, and an Intelligent Flight Battery. https://dl.djicdn.com/downloads/DJI_Mavic_3/DJI_Mavic_3_User_Manual_v2.0_en.pdf **Aircraft Status Indicators** DJI Mavic 3 has front LEDs and aircraft status indicators. 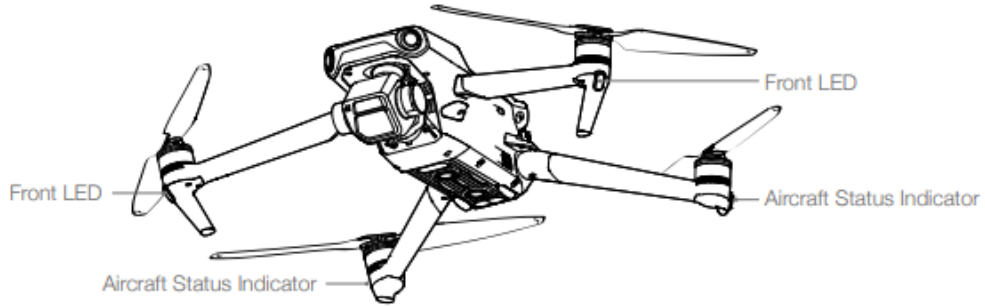 https://dl.djicdn.com/downloads/DJI_Mavic_3/DJI_Mavic_3_User_Manual_v2.0_en.pdf

	 https://www.dji.com/mavic-3?site=brandsite&from=nav
1[a] a sensor configured to sense flight performance of the aircraft during flight;	The Accused DJI Drones include a sensor configured to sense flight performance of the drone during flight. For example, the Accused DJI Drones, such as the DJI Mavic 3 drone, include a variety of sensors to sense flight performance during flight, including but not limited to GNSS sensor, infrared sensor, cameras (e.g., an omnidirectional binocular vision system), gyroscope, accelerometer, magnetometer, which are used to sense flight performance of the drone during flight, among others.

	APAS 5.0 Mavic 3 makes flight more fun than ever with recording that is no longer interrupted by obstacles along the way. When flying, Mavic 3 continually senses objects in all directions and bypasses them quickly and smoothly. https://www.dji.com/mavic-3?site=brandsite&from=nav **Omnidirectional Obstacle Sensing** Mavic 3 helps you to enjoy collision-free flight so you can focus on getting the best shots possible. Multiple wide-angle vision sensors work seamlessly with a high-performance vision computing engine to sense obstacles in all directions precisely and plan a safe flight route that avoids them. [4] https://www.dji.com/mavic-3?site=brandsite&from=nav

Sensing

Sensing System	Omnidirectional binocular vision system, supplemented with an infrared sensor at the bottom of the aircraft
Forward	Measurement Range: 0.5-20 m Detection Range: 0.5-200 m Effective Sensing Speed: Flight Speed ≤ 15m/s FOV: Horizontal 90°, Vertical 103°
Backward	Measurement Range: 0.5-16 m Effective Sensing Speed: Flight Speed ≤ 12m/s FOV: Horizontal 90°, Vertical 103°
Lateral	Measurement Range: 0.5-25 m Effective Sensing Speed: Flight Speed ≤ 15m/s FOV: Horizontal 90°, Vertical 85°
Upward	Measurement Range: 0.2-10 m Effective Sensing Speed: Flight Speed ≤ 6m/s FOV: Front and Back 100°, Left and Right 90°
Downward	Measurement Range: 0.3-18 m Effective Sensing Speed: Flight Speed ≤ 6m/s FOV: Front and Back 130°, Left and Right 160°
Operating Environment	Forward, Backward, Left, Right, and Upward: Surface with a clear pattern and adequate lighting (lux>15) Downward: Surface with a clear pattern and adequate lighting (lux >15). Diffuse reflective surface with diffuse reflectivity>20% (e.g. wall, tree, person)

https://www.dji.com/mavic-3/specs

Introduction

DJI Mavic 3 features both an Infrared Sensing System and Forward, Backward, Upward, Lateral, and Downward Vision Systems, allowing for hovering and flying indoors as well as outdoors and for automatic Return to Home while avoiding obstacles in all directions. The aircraft has a maximum flight speed of 47 mph (75.6 kph) and a maximum flight time of 46 minutes.

https://dl.djicdn.com/downloads/DJI_Mavic_3/DJI_Mavic_3_User_Manual_v2.0_en.pdf

Sensors

The Flight controller manages several sub components of the aircraft including sensors and landing gear.

https://developer.dji.com/onboard-sdk/documentation/guides/component-guide-flight-control.html

	Sensors DJI aircraft have a large number of sensors including accelerometers, gyroscopes, compasses, barometers, ultrasonic sensors, cameras and satellite positioning systems. These sensors are used to determine the current and predict the future state of the aircraft and the environment around it. https://developer.dji.com/mobile-sdk/documentation/introduction/product_introduction.html#remote-controller Introduction DJI aircraft caries telemetry system for the safety of the pilots and persons on the ground during flights. Telemetry from an on-board flight system is the primary source of real-time measurement and status information transmitted to the pilot. DJI Onboard SDK provides API to read telemetry data in real time in subscription or broadcast fashion. Example of the data include: • Sensor readings such as gyroscope and magnetometer • Fusion data such as attitude and global position • Aircraft information such as battery, gimbal, and flight status https://developer.dji.com/onboard-sdk/documentation/guides/component-guide-telemetry.html The accused DJI drones, including the Mavic 3 drone, use GPS for its "GNSS," Global Navigation Satellite Systems: GNSS — GPS + Galileo + BeiDou Hovering Accuracy Range — Vertical: ±0.1 m (with Vision Positioning); ±0.5 m (with GNSS Positioning) Horizontal: ±0.3 m (with Vision Positioning); ±0.5 m (with High-Precision Positioning System) https://www.dji.com/mavic-3/specs

	Aircraft 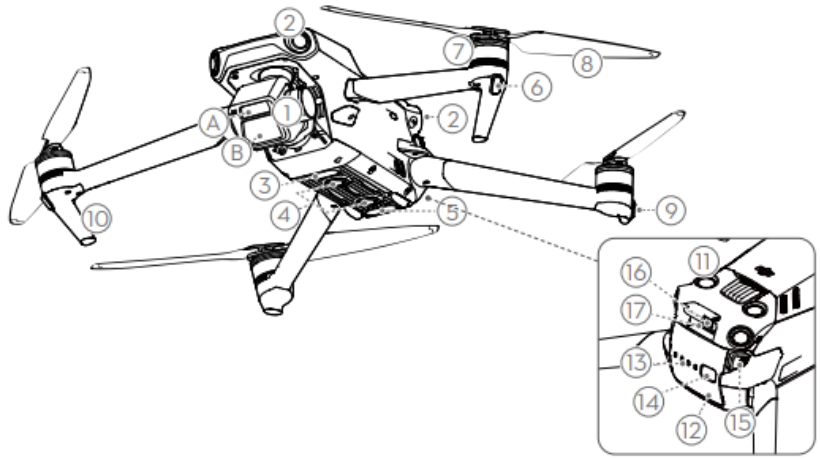 1. Gimbal and Camera A. Tele Camera B. Hasselblad L2D-20c Camera 2. Horizontal Omnidirectional Vision System 3. Auxiliary Bottom Light 4. Downward Vision System 5. Infrared Sensing System 6. Front LEDs 7. Motors 8. Propellers 9. Aircraft Status Indicators 10. Landing Gears (Built-in antennas) 11. Upward Vision System 12. Intelligent Flight Battery 13. Battery Level LEDs 14. Power Button 15. Battery Buckles 16. USB-C Port 17. microSD Card Slot https://dl.djicdn.com/downloads/DJI_Mavic_3/DJI_Mavic_3_User_Manual_v2.0_en.pdf
1[b] an avionics system associated with the sensor, the avionics system comprising: a memory card interface;	The Accused DJI Drones, including an avionics sytem associated with the sensor, the avionics system comprising a memory card interface.

	For example, each of the Accused DJI Drones include an avionics system comprising a flight controller and/or data processing system that includes a memory card interface (e.g., an interface to the "microSD Card Slot"). **Aircraft** DJI Mavic 3 contains a flight controller, video downlink system, vision systems, infrared sensing system, propulsion system, and an Intelligent Flight Battery. https://dl.djicdn.com/downloads/DJI_Mavic_3/DJI_Mavic_3_User_Manual_v1.4_en.pdf, 13 **Aircraft** DJI Mavic 3 contains a flight controller, video downlink system, vision systems, infrared sensing system, propulsion system, and an Intelligent Flight Battery. https://dl.djicdn.com/downloads/DJI_Mavic_3/DJI_Mavic_3_User_Manual_v1.4_en.pdf, 14

	Flight Modes DJI Mavic 3 has three flight modes, plus a fourth flight mode that the aircraft switches to in certain scenarios. Flight modes can be switched via the Flight Mode switch on the remote controller. Normal Mode: The aircraft utilizes GNSS and the Forward, Backward, Lateral, Upward, and Downward Vision Systems and Infrared Sensing System to locate and stabilize itself. When the GNSS signal is strong, the aircraft uses GNSS to locate and stabilize itself. When the GNSS is weak but the lighting and other environment conditions are sufficient, the aircraft uses the vision systems to locate and stabilize itself. When the Forward, Backward, Lateral, Upward, and Downward Vision Systems are enabled and lighting and other environment conditions are sufficient, the maximum tilt angle is 30° and the maximum flight speed is 15 m/s. Sport Mode: In Sport Mode, the aircraft uses GNSS for positioning and the aircraft responses are optimized for agility and speed making it more responsive to control stick movements. Note that obstacle sensing is disabled and the maximum flight speed is 21 m/s (19 m/s when flying in the EU). https://dl.djicdn.com/downloads/DJI_Mavic_3/DJI_Mavic_3_User_Manual_v1.4_en.pdf, 14 **Vision Systems and Infrared Sensing System** DJI Mavic 3 is equipped with both an Infrared Sensing System and Forward, Backward, Lateral, Upward, and Downward Vision Systems. The Upward and Downward Vision Systems consist of two cameras each, and the Forward, Backward, and Lateral Vision Systems consist of four cameras in total. The Infrared Sensing System consists of two 3D infrared modules. The Downward Vision System and Infrared Sensing System helps the aircraft maintain its current position, hover in place more precisely, and to fly indoors or in other environments where GNSS is unavailable. In addition, the Auxiliary Bottom Light located on the underside of the aircraft improves visibility for the Downward Vision System in weak light conditions.

<table>
<tr>
<td></td>
<td>
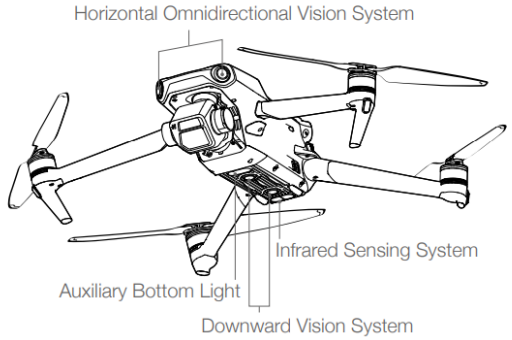

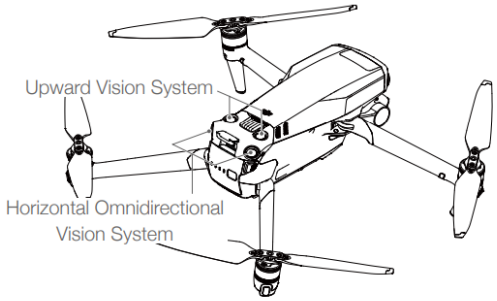

https://dl.djicdn.com/downloads/DJI_Mavic_3/DJI_Mavic_3_User_Manual_v1.4_en.pdf, 21

Using the Vision Systems

When GNSS is unavailable, the Downward Vision System is enabled if the surface has a clear texture and sufficient light.

The Forward, Backward, Lateral, and Upward Vision Systems will activate automatically when the aircraft is powered on if the aircraft is in Normal or Cine mode and Obstacle Avoidance is set to Bypass or Brake in DJI Fly. The aircraft can actively brake when detecting obstacles when using the Forward, Backward, Lateral, and Upward Vision Systems. The Forward, Backward, Lateral, and Upward Vision Systems work best with adequate lighting and clearly marked or textured obstacles. Due to inertia, users must make sure to brake the aircraft within a reasonable distance.

https://dl.djicdn.com/downloads/DJI_Mavic_3/DJI_Mavic_3_User_Manual_v1.4_en.pdf, 22
</td>
</tr>
</table>

	The N3 is a third generation NAZA™ flight control system designed for serious multi-rotor enthusiasts. It is a reliable and robust system with double IMUs and can be expanded with external high-performance sensors. It uses advanced control algorithms and sensor fusion algorithms to maintain complete stability and integrity of the aerial system. The N3 is fully compatible with the DJI™ Onboard and Mobile SDKs and other DJI products, allowing developers to optimize the system for specific applications. When used with DJI Lightbridge 2, it provides direct access to DJI GO features including Intelligent Flight Modes. With all essential components integrated into the N3 flight controller (including double IMUs, barometer and data recorder), the device is powerful and highly compact to work together with the GNSS-Compass module (including GPS and GLONASS), PMU module and LED module. https://dl.djicdn.com/downloads/N3/20170825/N3_User_Manual_En_v1.4.pdf, 4 **System Components** **How the System Works** The flight controller is the core module of the N3 fight control system, which utilizes the IMU, barometer, GNSS and compass to realize accurate attitude control and high-precision positioning for the aircraft. Multiple interfaces for SDK development and DJI devices, such as the Zenmuse Z15 gimbals, are also provided. The DJI Assistant 2 software allows you to configure parameters for installation, flight control, and other accessed devices. A simulator is also available for simulated flight practice. When used with the DJI Lightbridge 2, the N3 has direct access to features in the DJI GO app such as Intelligent Flight Modes. https://dl.djicdn.com/downloads/N3/20170825/N3_User_Manual_En_v1.4.pdf, 4

	N3 and N3 Pro Parts **Flight Controller** Feature Highlights 1. Independent CAN1 and CAN2 ports and API Serial port for the Onboard SDK. The CAN1 port is used to connect the GNSS-Compass and DJI devices while the CAN2 port is used to connect SDK devices. 2. Built-in inertial sensors for the measurement of aircraft attitude and built-in pressure sensor for the detection of aircraft altitude. 3. Support for multiple receiver types. If used with the DJI Lightbridge 2, the N3 has direct access to features in the DJI GO app such as Intelligent Flight Modes. 4. M1 to M8 are used to connect the ESCs of the aircraft and iESC for DJI Intelligent ESC communication. 5. 4 independent and configurable output ports and 4 I/O ports. These ports can be customized and connect other DJI devices (e.g. DJI Zenmuse Z15 gimbals, DJI Intelligent Landing Gear) or SDK devices. https://dl.djicdn.com/downloads/N3/20170825/N3_User_Manual_En_v1.4.pdf, 5 Flight Controller 2018-05-15 Introduction The flight controller is an onboard computer that combines control information from the pilot with sensor information to adjust the thrust at each propellor and fly the aircraft as desired. The flight controller is responsible for: • Flight control including motor control, taking off and landing, manual flight modes • Aircraft state information such as attitude, position, speed • Sensor sub components such as compasses, IMUs, and positioning systems. • Aircraft sub components such as the landing gear • Flight limitation systems such as GEO Zones and the GEO System • Aircraft flight simulation for testing and debugging A general description of fundamental flight control concepts can be found here.

	https://developer.dji.com/mobile-sdk/documentation/introduction/component-guide-flightController.html Flight Control Aircraft flight can be controlled in several ways: • **Manually**: Remote controller control sticks can be manipulated by the user • **Missions**: Simple high level flight automation • **Virtual Sticks**: Stick commands can be sent using DJI Mobile SDK APIs that simulate manual flight. • **Gestures**: Some aircraft (e.g. Spark) will perform basic flight maneuvers based on a gesture from the user. Flight Orientation The remote controller control sticks can be used to move the aircraft forward, backwards, left and right. However, if the direction of the aircraft isn't obvious, it can be difficult to control the aircraft predictably from pilot's perspective on the ground. Several flight orientation modes are available to make flying easier: • **Course Lock**: The aircraft moves relative to a locked course heading. • **Home Lock**: The aircraft moves relative radially to the Home Point. • **Aircraft Heading**: The aircraft moves relative to the front of the aircraft. More details are described in Flight Control Concepts. https://developer.dji.com/mobile-sdk/documentation/introduction/component-guide-flightController.html Sensors The Flight controller manages several sub components of the aircraft including sensors and landing gear. https://developer.dji.com/mobile-sdk/documentation/introduction/component-guide-flightController.html

Vision System and Intelligent Flight Assistant

Cameras can be used to detect obstacles and accurately determine relative position and velocity. These cameras are typically mounted on the product facing downward for positioning and forward for obstacle detection. They are separate from the main camera used to capture photos and videos.

https://developer.dji.com/mobile-sdk/documentation/introduction/component-guide-flightController.html

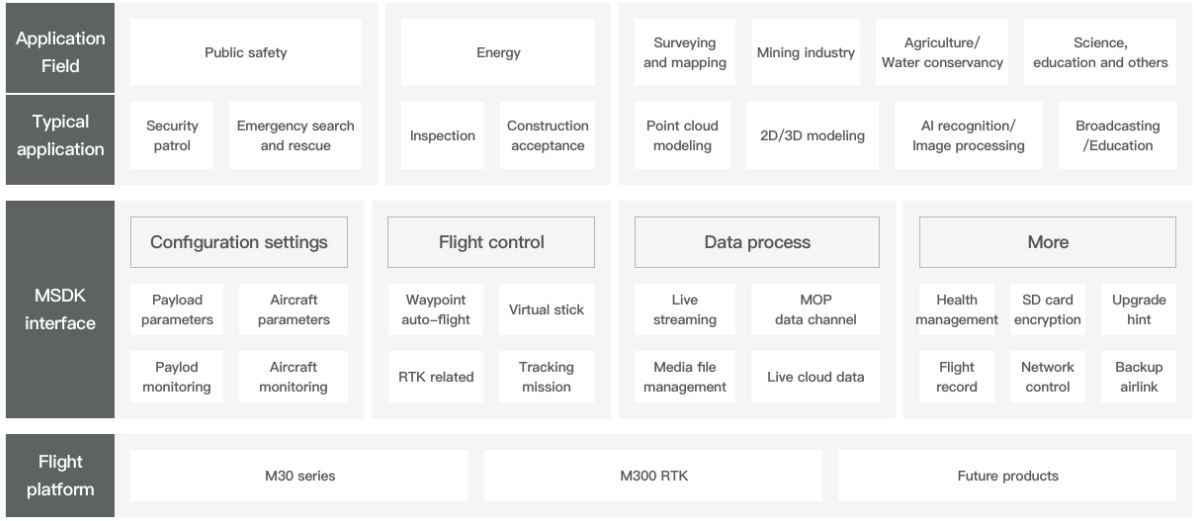

https://developer.dji.com/mobile-sdk/

Sensing

Sensing System	Omnidirectional binocular vision system, supplemented with an infrared sensor at the bottom of the aircraft
Forward	Measurement Range: 0.5-20 m Detection Range: 0.5-200 m Effective Sensing Speed: Flight Speed ≤ 15m/s FOV: Horizontal 90°, Vertical 103°
Backward	Measurement Range: 0.5-16 m Effective Sensing Speed: Flight Speed ≤ 12m/s FOV: Horizontal 90°, Vertical 103°
Lateral	Measurement Range: 0.5-25 m Effective Sensing Speed: Flight Speed ≤ 15m/s FOV: Horizontal 90°, Vertical 85°
Upward	Measurement Range: 0.2-10 m Effective Sensing Speed: Flight Speed ≤ 6m/s FOV: Front and Back 100°, Left and Right 90°
Downward	Measurement Range: 0.3-18 m Effective Sensing Speed: Flight Speed ≤ 6m/s FOV: Front and Back 130°, Left and Right 160°
Operating Environment	Forward, Backward, Left, Right, and Upward: Surface with a clear pattern and adequate lighting (lux>15) Downward: Surface with a clear pattern and adequate lighting (lux >15). Diffuse reflective surface with diffuse reflectivity>20% (e.g. wall, tree, person)

https://www.dji.com/mavic-3/specs

Introduction

DJI Mavic 3 features both an Infrared Sensing System and Forward, Backward, Upward, Lateral, and Downward Vision Systems, allowing for hovering and flying indoors as well as outdoors and for automatic Return to Home while avoiding obstacles in all directions. The aircraft has a maximum flight speed of 47 mph (75.6 kph) and a maximum flight time of 46 minutes.

https://dl.djicdn.com/downloads/DJI_Mavic_3/DJI_Mavic_3_User_Manual_v2.0_en.pdf

	Sensors The Flight controller manages several sub components of the aircraft including sensors and landing gear. https://developer.dji.com/onboard-sdk/documentation/guides/component-guide-flight-control.html Introduction DJI aircraft caries telemetry system for the safety of the pilots and persons on the ground during flights. Telemetry from an on-board flight system is the primary source of real-time measurement and status information transmitted to the pilot. DJI Onboard SDK provides API to read telemetry data in real time in subscription or broadcast fashion. Example of the data include: • Sensor readings such as gyroscope and magnetometer • Fusion data such as attitude and global position • Aircraft information such as battery, gimbal, and flight status https://developer.dji.com/onboard-sdk/documentation/guides/component-guide-telemetry.html **GNSS** — GPS + Galileo + BeiDou **Hovering Accuracy Range** — Vertical: ±0.1 m (with Vision Positioning); ±0.5 m (with GNSS Positioning) Horizontal: ±0.3 m (with Vision Positioning); ±0.5 m (with High-Precision Positioning System) https://www.dji.com/mavic-3/specs

	APAS 5.0 Mavic 3 makes flight more fun than ever with recording that is no longer interrupted by obstacles along the way. When flying, Mavic 3 continually senses objects in all directions and bypasses them quickly and smoothly. https://www.dji.com/mavic-3?site=brandsite&from=nav **Omnidirectional Obstacle Sensing** Mavic 3 helps you to enjoy collision-free flight so you can focus on getting the best shots possible. Multiple wide-angle vision sensors work seamlessly with a high-performance vision computing engine to sense obstacles in all directions precisely and plan a safe flight route that avoids them. [4] https://www.dji.com/mavic-3?site=brandsite&from=nav The memory card interface of the Accused DJI Drones' avionics system is shown as element 17 of the diagram below:

Aircraft

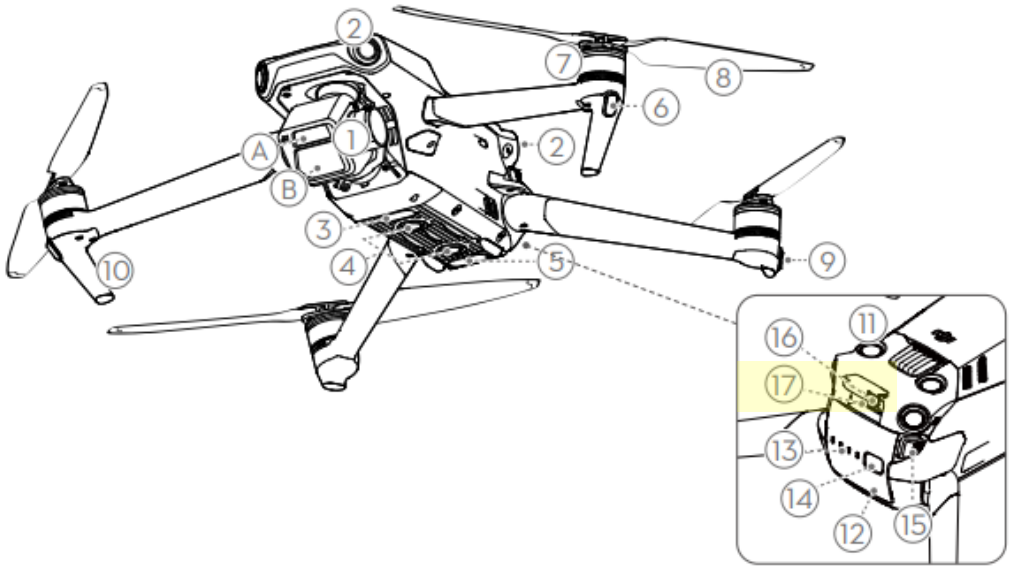

1. Gimbal and Camera
   A. Tele Camera
   B. Hasselblad L2D-20c Camera
2. Horizontal Omnidirectional Vision System
3. Auxiliary Bottom Light
4. Downward Vision System
5. Infrared Sensing System
6. Front LEDs
7. Motors
8. Propellers
9. Aircraft Status Indicators
10. Landing Gears (Built-in antennas)
11. Upward Vision System
12. Intelligent Flight Battery
13. Battery Level LEDs
14. Power Button
15. Battery Buckles
16. USB-C Port
17. microSD Card Slot

https://dl.djicdn.com/downloads/DJI_Mavic_3/DJI_Mavic_3_User_Manual_v1.0_en.pdf

	The aircraft will generate a timelapse video automatically, which is viewable in playback. In the camera settings, users can select to save the footage in JPEG or RAW format and to store the footage in the built-in storage or the microSD card. https://dl.djicdn.com/downloads/DJI_Mavic_3/DJI_Mavic_3_User_Manual_v1.4_en.pdf, 27 **Recommended microSD Cards**: Lexar 1066x 64GB V30 A2 microSDXC; Lexar 1066x 128GB V30 A2 microSDXC; Lexar 1066x 256GB V30 A2 microSDXC; Lexar 1066x 512GB V30 A2 microSDXC; SanDisk High Endurance 64GB V30 microSDXC; SanDisk High Endurance 128GB V30 microSDXC; SanDisk High Endurance 256GB V30 microSDXC; Kingston Canvas Go! Plus 64GB V30 A2 microSDXC; Kingston Canvas Go! Plus 128GB V30 A2 microSDXC; Kingston Canvas Go! Plus 256GB V30 A2 microSDXC; Kingston Canvas Go! Plus 512GB V30 A2 microSDXC; Samsung EVO Plus 512GB V30 A2 microSDXC; Samsung PRO Plus 256GB V30 A2 microSDXC; Samsung PRO Plus 512GB V30 A2 microSDXC **SSD Specs**: Mavic 3: 8 GB (available space is approx. 7.2 GB); Mavic 3 Cine: 1 TB (available space is approx. 934.8 GB) https://www.dji.com/mavic-3/specs
1[c] a database in data communication with the sensor and the avionics system, the database being configured to store information relating to a pilot flying the aircraft during flight and the	The Accused DJI Drones include a database in data communication with the sensor and the avionics system, the database being configured to store information relating to a pilot flying the drone during flight and the flight performance of the aircraft during flight. For example, each of the Accused DJI Drones includes a flight recorder that stores to internal storage and/or broadcasts flight telemetry, aircraft status, and other parameters during flight of

flight performance of the aircraft during flight;	the aircraft. The drone's flight recorder data, along with additional data cited below, are examples of information relating to a pilot flying the aircraft during flight and the flight performance of the aircraft during flight. Each of the Accused DJI Drones include a DJI mobile application that receives flight recorder data (along with any additional data relating to flight and/or flight performance) from the aircraft and stores the data in a database in data communication with the sensor and the avionics system (via, e.g., a wireless link to the aircraft). As shown below, for example, the DJI GO Application receives records and flight data collected by sensors on drones (e.g., flight recorder data) during flight automatically. 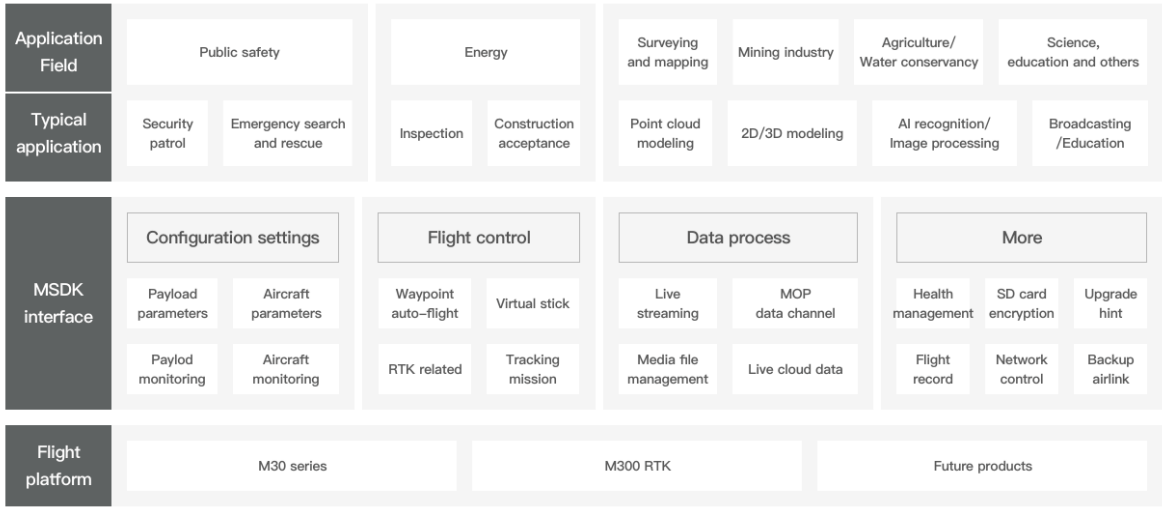 https://developer.dji.com/mobile-sdk/ **Flight Recorder** Flight data including flight telemetry, aircraft status information, and other parameters are automatically saved to the internal data recorder of the aircraft. The data can be accessed using DJI Assistant 2 (Consumer Drones Series).

	https://dl.djicdn.com/downloads/DJI_Mavic_3/DJI_Mavic_3_User_Manual_v1.4_en.pdf, 31 **Flight Record Sample** 2022-08-25 ☆ ☆ ☆ ☆ ☆ No Rating Github Edit **Sample Introduction** The flight record module is to provide users with a way to determine responsibility and locate problems. If the user's drone is lost and the flight control log of the drone cannot be obtained, the flight records saved on the App can be analyzed. **Interface Calling Process** The two interfaces used by the flight record module are: • Get the path to store flight logs: getFlightRecordPath() • Get the path of the flight controller compressed log: getFlyCLogPath() There is no obvious calling process relationship. For detailed usage, please check the **API documentation** of Mobile SDK. https://developer.dji.com/doc/mobile-sdk-tutorial/en/tutorials/flight-record.html#sample-acquisition

	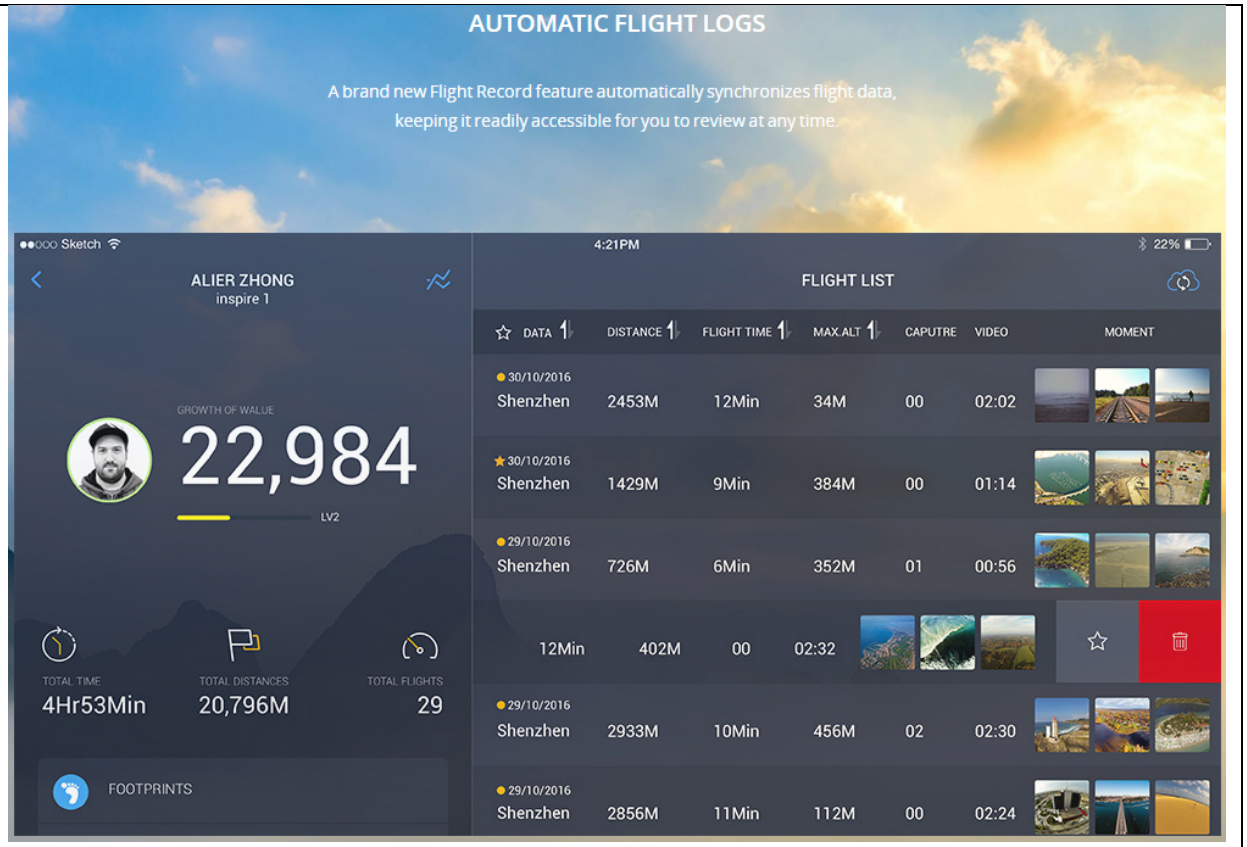 https://www.dji.com/goapp
1[d] a wireless transmitter having memory, the wireless transmitter in data communication with the avionics system and the database, the wireless transmitter comprising a non-volatile memory card coupled to the memory card interface of the avionics system; and	The Accused DJI Drones include a wireless transmitter having memory, the wireless transmitter in data communication with the avionics system and the database, the wireless transmitter comprising a non-volatile memory card coupled to the memory card interface of the avionics system. For example, the Accused DJI drones include wireless transmitters having memory (e.g., WiFi, OcuSync, Lightbridge, and/or Auxiliary transmitters) to establish one or more wireless links between the aircraft, remote controllers, handheld cameras, and mobile devices. These wireless

	transmitters are in communication with the drone flight controller and the database and the wireless transmitter comprises a non-volatile memory card (e.g., microSD card) coupled to the memory card interface of the flight controller. AirLink 2017-06-27 Introduction AirLink describes the wireless link between aircraft, remote controllers, handheld cameras and mobile devices. There are four types of wireless links used in DJI products: • WiFi • OcuSync • Lightbridge • Auxiliary Wireless communication links provide great flexibility, but also have limitations. The link will degrade as obstacles come between the devices communicating wirelessly, as the separation between devices increases, and as interference with other communication links increases. A table detailing the type of wireless link for all aircraft products can be found in the Product Introduction. Osmo is not included in this table and uses the WiFi wireless link between itself and mobile device. https://developer.dji.com/mobile-sdk/documentation/introduction/component-guide-airlink.html

	• **Telemetry Data** refers to data recorded regarding a drone's flight, including altitude, speed, distance, location (e.g., GPS coordinates). Telemetry data also includes a log of the user's control stick operation, which can be used for diagnostic purposes. In the DJI flight control app, this telemetry data is compiled into one log per flight called the "Flight Record." This data is first generated in the drone and the remote controller, and it is constantly transmitted to the mobile device connected to the remote controller, which communicates with the drone. After receiving this telemetry data, the mobile device stores the data locally as part of the flight control app. The flight control app does not automatically transmit telemetry data to DJI servers. To synchronize this telemetry data to DJI's servers for backup purposes, the user must manually use the "Sync" button on the DJI GO interface. One purpose of this "Sync" function is to allow DJI's aftersales service personnel to analyze a user's flight history in order to determine causes of drone malfunctions or crashes. Another is to provide a backup mechanism for our users who need to maintain flight records, as well as to allow a single user account to be used with a common set of flight logs across multiple mobile devices. https://security.dji.com/news?newsId=case-4&lang=en_US Sensors The Flight controller manages several sub components of the aircraft including sensors and landing gear. https://developer.dji.com/onboard-sdk/documentation/guides/component-guide-flight-control.html Introduction DJI aircraft caries telemetry system for the safety of the pilots and persons on the ground during flights. Telemetry from an on-board flight system is the primary source of real-time measurement and status information transmitted to the pilot. DJI Onboard SDK provides API to read telemetry data in real time in subscription or broadcast fashion. Example of the data include: • Sensor readings such as gyroscope and magnetometer • Fusion data such as attitude and global position • Aircraft information such as battery, gimbal, and flight status

	https://developer.dji.com/onboard-sdk/documentation/guides/component-guide-telemetry.html Broadcast In data broadcast mechanism, the data package arrives at a pre-configured frequency. The frequency can be modified across your application via DJI Onboard API or it can be changed via DJI Assistant 2 before the flight. Available Broadcast Data Broadcast data arives in a package containing state information for components listed below: • Timestamp • Hardware Synchronization Timestamp • Quaternion • Angular Rate • Velocity • Gyroscope Reading • Global Position • Relative Position • GPS • RTK • Magnetometer • Remote Controller • Gimbal • Flight Status • Battery https://developer.dji.com/onboard-sdk/documentation/guides/component-guide-telemetry.html Flight Recorder Flight data including flight telemetry, aircraft status information, and other parameters are automatically saved to the internal data recorder of the aircraft. The data can be accessed using DJI Assistant 2 (Consumer Drones Series).

https://dl.djicdn.com/downloads/DJI_Mavic_3/20220531/DJI_Mavic_3_User_Manual_v1.6_en.pdf

Video Transmission

Video Transmission System	O3+
Live View Quality	Remote Controller: 1080p@30fps/1080p@60fps
Operation Frequency	2.400-2.4835 GHz 5.725-5.850 GHz
Max Transmission Distance (unobstructed, free of interference and aligned with controller)	2.400-2.4835 GHz; 5.725-5.850 GHz FCC: 15 km CE: 8 km SRRC: 8 km MIC: 8 km
Signal Transmission Ranges (FCC)	Strong Interference (urban landscape, limited line of sight, many competing signals): Approx. 1.5-3 km Medium Interference (suburban landscape, open line of sight, some competing signals): Approx. 3-9 km Low Interference (open landscape abundant line of sight, few competing signals): Approx. 9-15 km Data is tested under different standards in open areas free of interference. It only refers to the maximum, one-way flight distance without considering Return to Home. Please pay attention to RTH prompts in the DJI Fly app during actual flight.
Max Download Bitrate	O3+: 5.5MB/s (with RC-N1 remote controller) 15MB/s (with DJI RC Pro remote controller) Wi-Fi 6: 80MB/s
Latency (depending on environmental conditions and mobile device)	130 ms (with RC-N1 remote controller) 120 ms (with DJI RC Pro remote controller)
Antennas	4 antennas, 2T4R
Transmitter Power (EIRP)	2.4 GHz: ≤33 dBm (FCC); ≤20 dBm (CE/SRRC/MIC) 5.8 GHz: ≤33 dBm (FCC), ≤30 dBm(SRRC), ≤14 dBm(CE)

https://www.dji.com/mavic-3/specs

	Storage **Recommended microSD Cards** Standard bitrate video recommended microSD Cards: H.265 : 5.1K : 5120x2700@24/25/30/48/50fps DCI 4K : 4096x2160@24/25/30/48/50/60/120fps 4K: 3840x2160@24/25/30/48/50/60/120fps FHD : 1920x1080@24/25/30/48/50/60/120/200fps H.264 : DCI 4K : 4096x2160@24/25/30/48/50/60fps 4K : 3840x2160@24/25/30/48/50/60fps FHD: 1920x1080@24/25/30/48/50/60/120/200fps SanDisk Extreme Pro 64G v30 A2 microSDXC SanDisk Extreme Pro 128G v30 A2 microSDXC https://www.dji.com/mavic-3/specs **State** The flight controller provides detailed state information at up to 10 Hz including: • Aircraft position, velocity and altitude • Remaining Battery and Flight time information • Home location • Sensor information (compass, IMU, Satellite positioning) • Return home status • Whether motors are on and aircraft is flying or not • Flight limitation and GEO system information

	https://developer.dji.com/mobile-sdk/documentation/introduction/component-guide-flightController.html The DJI RC Pro, for example, comprises a microSD Card as labeled 11 below: DJI RC Pro 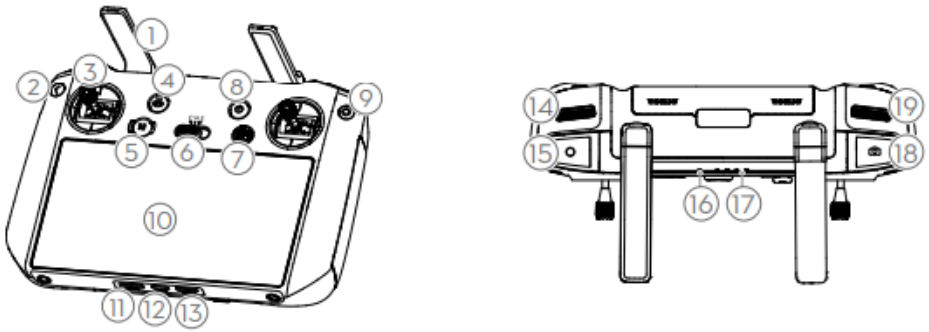 1. Antennas Relay aircraft control and video wireless signals. 2. Back Button Press once to return to the previous screen. Press twice to return to the home screen. 3. Control Sticks Use the control sticks to control the aircraft movements. Set the flight control mode in DJI 9. Confirm Button Press once to confirm a selection. The button does not have a function when using DJI Fly. 10. Touchscreen Touch the screen to operate the remote controller. Note that the touchscreen is not waterproof. Operate with caution. 11. microSD Card Slot Use to insert a microSD card. https://dl.djicdn.com/downloads/DJI_Mavic_3/DJI_Mavic_3_User_Manual_v2.0_en.pdf
1[e] a transceiver comprising an input device, the transceiver having a transceiver identity associated with pilot identification information, the transceiver being	The Accused DJI Drones include a transceiver comprising an input device, the transceiver having a transceiver identity associated with pilot identification information, the transceiver being configured for receiving information relating to sensed flight performance from the wireless transmitter, for associating the thus received information with the pilot identification

configured for receiving information relating to sensed flight performance from the wireless transmitter, for associating the thus received information with the pilot identification information associated with the transceiver identity, and for transmitting the received information with the thus associated pilot identification information to the database;	information associated with the transceiver identity, and for transmitting the received information with the thus associated pilot identification information to the database. For example, each of the Accused DJI Drones includes an RC controller comprising a wireless transceiver (in the RC controller and/or in an attached mobile phone) and input device (e.g., a touch screen) having a transceiver identity associated with pilot identification information (e.g., DJI account login credentials). The transceiver is configured for receiving information relating to sensed flight performance (e.g., flight recorder data and additional data cited below) from the wireless transmitter in the drone and associated the received information with the pilot identification information associated with the transceiver identity (e.g., DJI account login credentials). The wireless transceiver of the RC controller and/or mobile phone is also configured for transmitting the received information with the thus associated pilot identification to the database. • **Telemetry Data** refers to data recorded regarding a drone's flight, including altitude, speed, distance, location (e.g., GPS coordinates). Telemetry data also includes a log of the user's control stick operation, which can be used for diagnostic purposes. In the DJI flight control app, this telemetry data is compiled into one log per flight called the "Flight Record." This data is first generated in the drone and the remote controller, and it is constantly transmitted to the mobile device connected to the remote controller, which communicates with the drone. After receiving this telemetry data, the mobile device stores the data locally as part of the flight control app. The flight control app does not automatically transmit telemetry data to DJI servers. To synchronize this telemetry data to DJI's servers for backup purposes, the user must manually use the "Sync" button on the DJI GO interface. One purpose of this "Sync" function is to allow DJI's aftersales service personnel to analyze a user's flight history in order to determine causes of drone malfunctions or crashes. Another is to provide a backup mechanism for our users who need to maintain flight records, as well as to allow a single user account to be used with a common set of flight logs across multiple mobile devices. https://security.dji.com/news?newsId=case-4&lang=en_US

	• **Photography/Videography Data** includes photos and video recorded by the drone's main camera sensors. This data is stored on board the drone in an SD card. The user may also choose to save lower-resolution versions of the photography/videography data locally within the flight control app on the user's mobile device. The flight control app does not automatically transmit any photography/videography data to DJI servers. Instead, each time a user wants to share this data, the user must manually turn on the sharing feature. https://security.dji.com/news?newsId=case-4&lang=en_US Introduction DJI aircraft caries telemetry system for the safety of the pilots and persons on the ground during flights. Telemetry from an on-board flight system is the primary source of real-time measurement and status information transmitted to the pilot. DJI Onboard SDK provides API to read telemetry data in real time in subscription or broadcast fashion. Example of the data include: • Sensor readings such as gyroscope and magnetometer • Fusion data such as attitude and global position • Aircraft information such as battery, gimbal, and flight status https://developer.dji.com/onboard-sdk/documentation/guides/component-guide-telemetry.html • **Obstacle Avoidance Data** is recorded by the obstacle avoidance image sensors (e.g., the two "eyes" at the front of Mavic or Phantom 4). This feature helps to protect buildings, people, and animals from drone collisions. This type of imaging data is limited to low resolution video, with no audio. Like telemetry data, DJI sometimes analyzes obstacle avoidance data to determine causes of drone malfunctions or crashes. The flight control app does not automatically transmit obstacle avoidance data to DJI servers. Obstacle avoidance data may only be transmitted in response to manual triggering in the flight control app. The flight control app does not permit automatic transmission of obstacle avoidance data. https://security.dji.com/news?newsId=case-4&lang=en_US

	Broadcast In data broadcast mechanism, the data package arrives at a pre-configured frequency. The frequency can be modified across your application via DJI Onboard API or it can be changed via DJI Assistant 2 before the flight. Available Broadcast Data Broadcast data arives in a package containing state information for components listed below: • Timestamp • Hardware Synchronization Timestamp • Quaternion • Angular Rate • Velocity • Gyroscope Reading • Global Position • Relative Position • GPS • RTK • Magnetometer • Remote Controller • Gimbal • Flight Status • Battery https://developer.dji.com/onboard-sdk/documentation/guides/component-guide-telemetry.html

	By default, DJI drones do not automatically transmit most types of user data without user authorization, including media files (photos and videos) and flight logs (detailed telemetry and location information compiled during the flight). Users can choose whether to share most types of data collected by DJI products within the DJI GO App, available for both Android and iOS. For example, a user must affirmatively choose to share media files or flight logs. DJI drones are capable of collecting different types of data, together with DJI's flight control apps, such as DJI GO and DJI GO 4. These flight control apps augment the drone's physical remote controller to provide users with better control of the drone. Most of DJI's drone remote controllers do not have a video display, and so the flight control app, running on the customer's mobile device, provides a live video feed and other advanced controls when paired with the DJI remote controller. The flight control app is the only part of a DJI product that has the ability to connect to the internet. Other software developers have created flight control, photography, and mapping apps for DJI drones, and our customers have the choice to use those as alternatives to DJI's flight control apps. https://security.dji.com/news?newsId=case-4&lang=en_US • **Photography/Videography Data** includes photos and video recorded by the drone's main camera sensors. This data is stored on board the drone in an SD card. The user may also choose to save lower-resolution versions of the photography/videography data locally within the flight control app on the user's mobile device. The flight control app does not automatically transmit any photography/videography data to DJI servers. Instead, each time a user wants to share this data, the user must manually turn on the sharing feature. https://security.dji.com/news?newsId=case-4&lang=en_US

DJI RC Pro

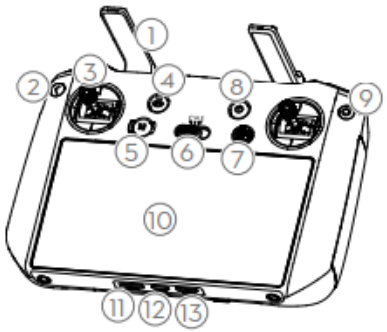

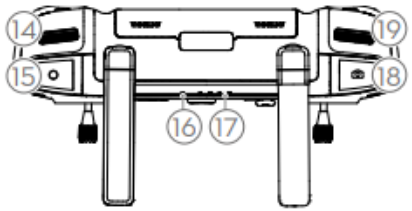

1. **Antennas**
   Relay aircraft control and video wireless signals.
2. **Back Button**
   Press once to return to the previous screen. Press twice to return to the home screen.
3. **Control Sticks**
   Use the control sticks to control the aircraft movements. Set the flight control mode in DJI

9. **Confirm Button**
   Press once to confirm a selection. The button does not have a function when using DJI Fly.
10. **Touchscreen**
    Touch the screen to operate the remote controller. Note that the touchscreen is not waterproof. Operate with caution.
11. **microSD Card Slot**
    Use to insert a microSD card.

https://dl.djicdn.com/downloads/DJI_Mavic_3/DJI_Mavic_3_User_Manual_v2.0_en.pdf

	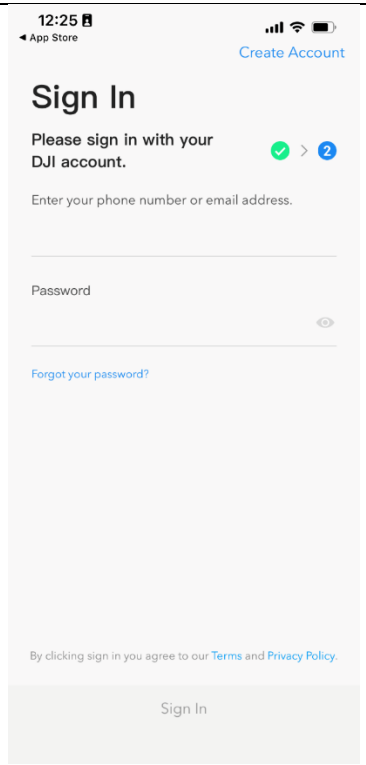 Screenshot from the DJI GO application for iOS

	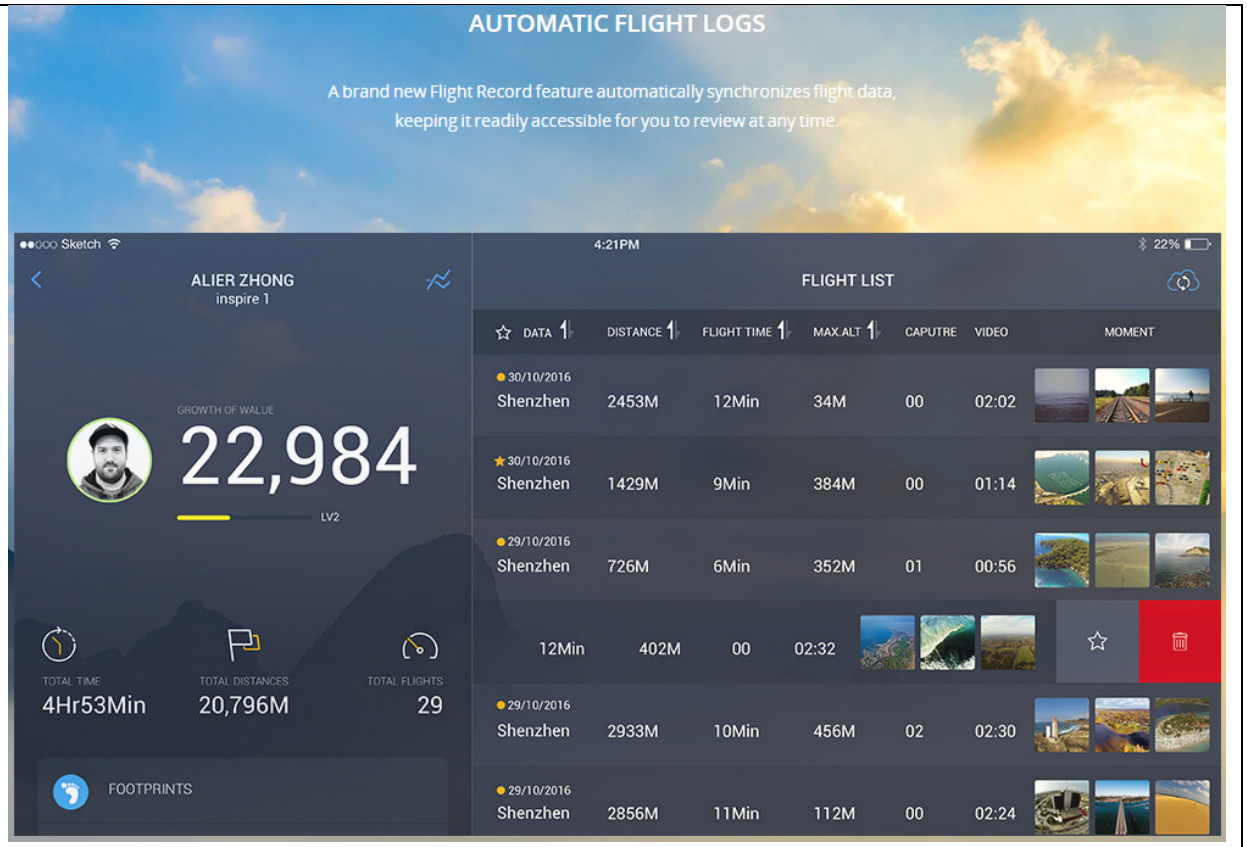 https://www.dji.com/goapp
1[f] wherein the transceiver is a wireless transceiver in data communication with the wireless transmitter;	The Accused DJI Drones include a wireless transceiver in data communication with the wireless transmitter of the drone. See Elements 1[d]-1[e], above, which explain that DJI's RC controllers (and/or any attached mobile phone) include a wireless transmitter (e.g., WiFi, OcuSync, Lightbridge, and/or Auxiliary transmitters) in communication with the drone's wireless transmitter.

	SWIPE TO FLY OR LAND /TRACK YOUR ENTIRE FLIGHT Auto take-off and land your aircraft with just a swipe of the finger on your smart device. Track your aircraft's position and heading with a glance at a map. You can also use this map to set a new home point and even activate Return to Home, making flying easy and simple. https://www.dji.com/goapp **Linking the Remote Controller** The aircraft and remote controller must be linked before use. Follow these steps to link a new remote controller. **Method 1:** 1. Power on the remote controller and the aircraft. 2. Press the C1, C2, and record button simultaneously until the status LED blinks blue and the remote controller beeps. 3. Press and hold the power button of the aircraft for more than four seconds. The aircraft beeps once to indicate it is ready to link. The aircraft beeps twice to indicate linking is successful. The battery level LEDs of the remote controller will glow solid. **Method 2:** 1. Power on the remote controller and the aircraft. 2. Launch DJI Fly. 3. In camera view, tap ••• and select Control and Pair to Aircraft (Link). 4. Press and hold the power button of the aircraft for more than four seconds. The aircraft beeps once indicating it is ready to link. The aircraft beeps twice indicating linking is successful. The battery level LEDs of the remote controller will glow solid. https://dl.djicdn.com/downloads/DJI_Mavic_3/DJI_Mavic_3_User_Manual_v2.0_en.pdf
1[g] wherein the wireless transceiver is configured to wirelessly receive and transmit	The Accused DJI Drones include a wireless transceiver that is configured to wirelessly receive and transmit aircraft flight performance data to the database.

aircraft flight performance data to the database;	For example, see Element 1[e], above. The DJI RC controllers and/or connected mobile phones are configured to wirelessly receive and transmit aircraft flight performance data (e.g. flight recorder data, etc.) to the database. For example, the DJI RC controllers and/or connected mobile phones receive flight data such as flight telemetry data and other data related to flight performance from the drone via the wireless link to the aircraft. See Element 1[d], 1[e]. 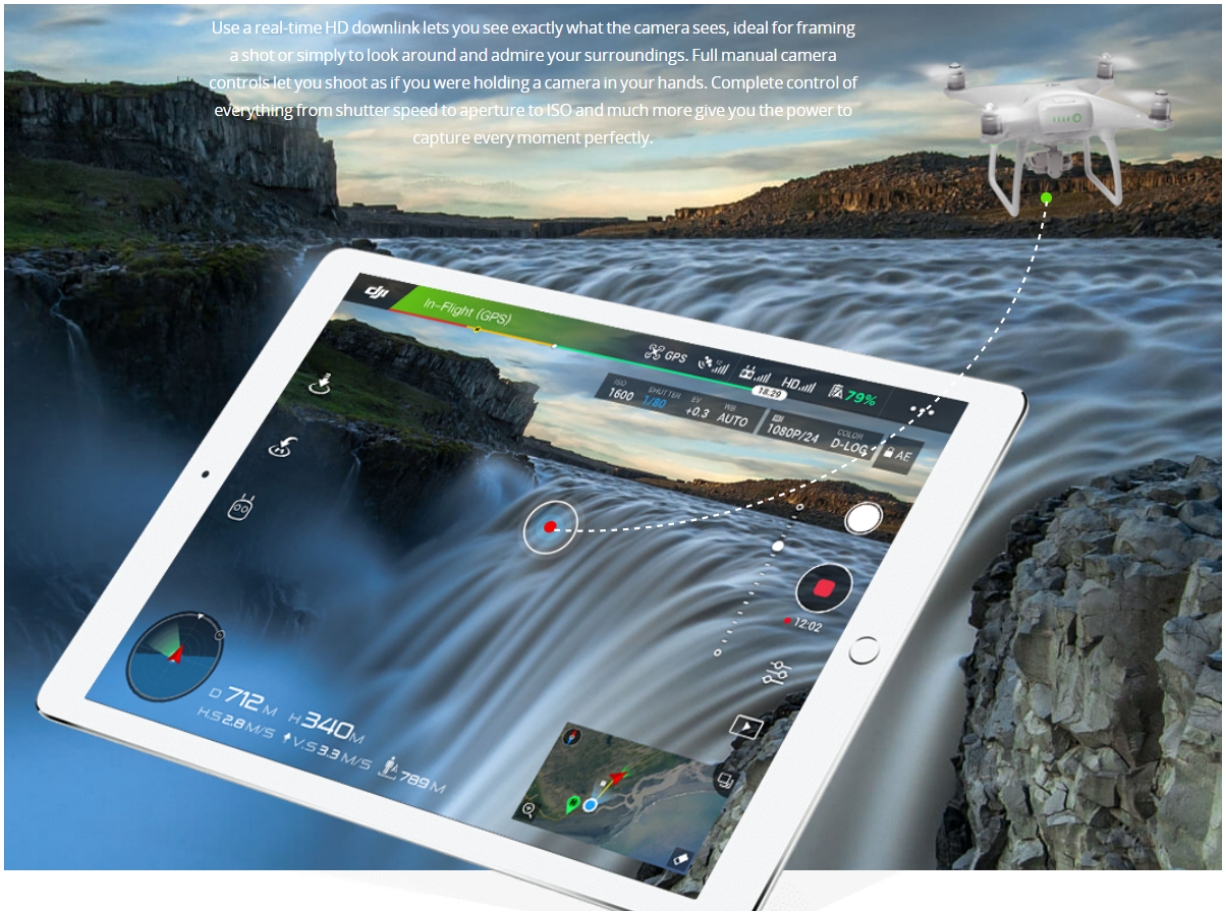 https://www.dji.com/goapp

	• **Telemetry Data** refers to data recorded regarding a drone's flight, including altitude, speed, distance, location (e.g., GPS coordinates). Telemetry data also includes a log of the user's control stick operation, which can be used for diagnostic purposes. In the DJI flight control app, this telemetry data is compiled into one log per flight called the "Flight Record." This data is first generated in the drone and the remote controller, and it is constantly transmitted to the mobile device connected to the remote controller, which communicates with the drone. After receiving this telemetry data, the mobile device stores the data locally as part of the flight control app. The flight control app does not automatically transmit telemetry data to DJI servers. To synchronize this telemetry data to DJI's servers for backup purposes, the user must manually use the "Sync" button on the DJI GO interface. One purpose of this "Sync" function is to allow DJI's aftersales service personnel to analyze a user's flight history in order to determine causes of drone malfunctions or crashes. Another is to provide a backup mechanism for our users who need to maintain flight records, as well as to allow a single user account to be used with a common set of flight logs across multiple mobile devices. https://security.dji.com/news?newsId=case-4&lang=en_US Introduction DJI aircraft caries telemetry system for the safety of the pilots and persons on the ground during flights. Telemetry from an on-board flight system is the primary source of real-time measurement and status information transmitted to the pilot. DJI Onboard SDK provides API to read telemetry data in real time in subscription or broadcast fashion. Example of the data include: • Sensor readings such as gyroscope and magnetometer • Fusion data such as attitude and global position • Aircraft information such as battery, gimbal, and flight status https://developer.dji.com/onboard-sdk/documentation/guides/component-guide-telemetry.html

	Broadcast In data broadcast mechanism, the data package arrives at a pre-configured frequency. The frequency can be modified across your application via DJI Onboard API or it can be changed via DJI Assistant 2 before the flight. Available Broadcast Data Broadcast data arives in a package containing state information for components listed below: • Timestamp • Hardware Synchronization Timestamp • Quaternion • Angular Rate • Velocity • Gyroscope Reading • Global Position • Relative Position • GPS • RTK • Magnetometer • Remote Controller • Gimbal • Flight Status • Battery https://developer.dji.com/onboard-sdk/documentation/guides/component-guide-telemetry.html

DJI RC Pro

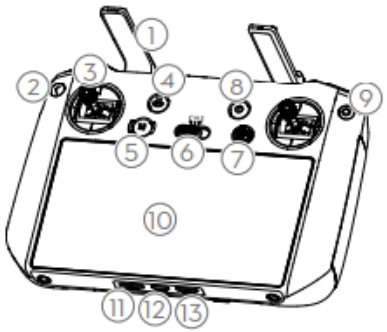

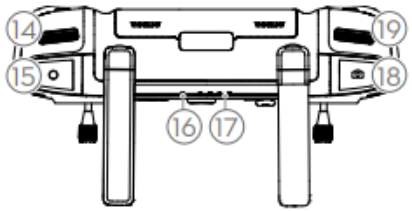

1. **Antennas**
   Relay aircraft control and video wireless signals.
2. **Back Button**
   Press once to return to the previous screen. Press twice to return to the home screen.
3. **Control Sticks**
   Use the control sticks to control the aircraft movements. Set the flight control mode in DJI

9. **Confirm Button**
   Press once to confirm a selection. The button does not have a function when using DJI Fly.
10. **Touchscreen**
    Touch the screen to operate the remote controller. Note that the touchscreen is not waterproof. Operate with caution.
11. **microSD Card Slot**
    Use to insert a microSD card.

https://dl.djicdn.com/downloads/DJI_Mavic_3/DJI_Mavic_3_User_Manual_v2.0_en.pdf

	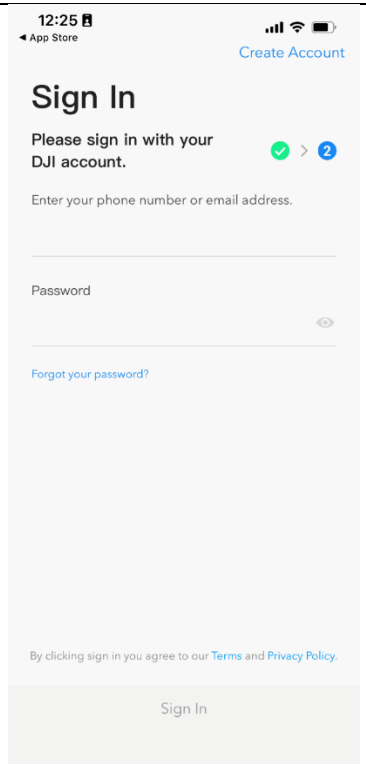 Screenshot from the DJI GO application for iOS

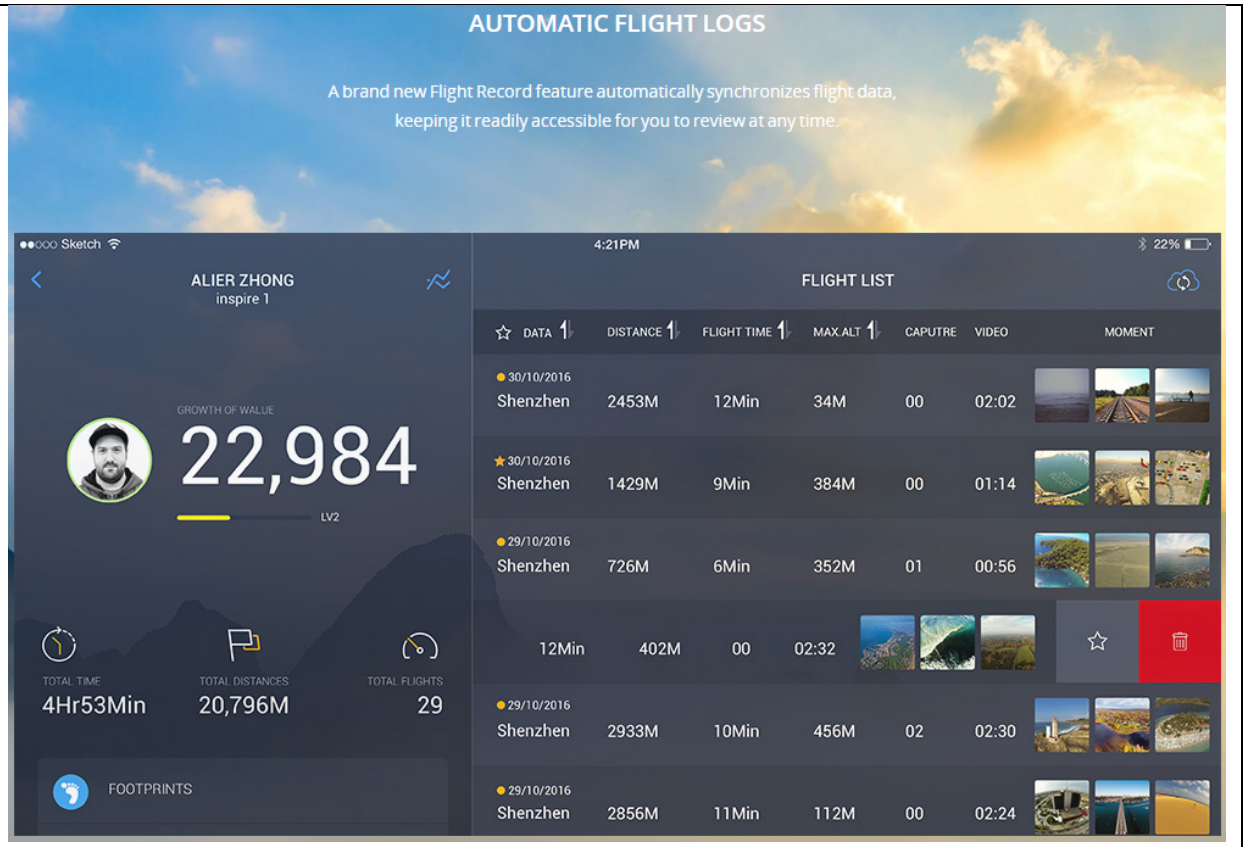

https://www.dji.com/goapp

	Introduction DJI aircraft caries telemetry system for the safety of the pilots and persons on the ground during flights. Telemetry from an on-board flight system is the primary source of real-time measurement and status information transmitted to the pilot. DJI Onboard SDK provides API to read telemetry data in real time in subscription or broadcast fashion. Example of the data include: • Sensor readings such as gyroscope and magnetometer • Fusion data such as attitude and global position • Aircraft information such as battery, gimbal, and flight status https://developer.dji.com/onboard-sdk/documentation/guides/component-guide-telemetry.html
1[h] wherein the stored sensed flight performance is only accessible with the associated pilot identification information;	The stored sensed flight performance is only accessible with the associated pilot identification information. For example, the DJI mobile applications require DJI login credentials to access the stored sensed flight performance. As another example, at least some types of stored flight performance require user permission before transmission to a database. 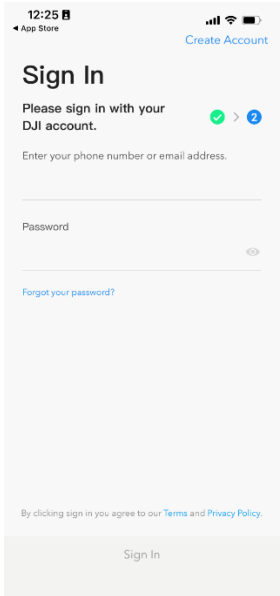

	Screenshot from the DJI GO application for iOS 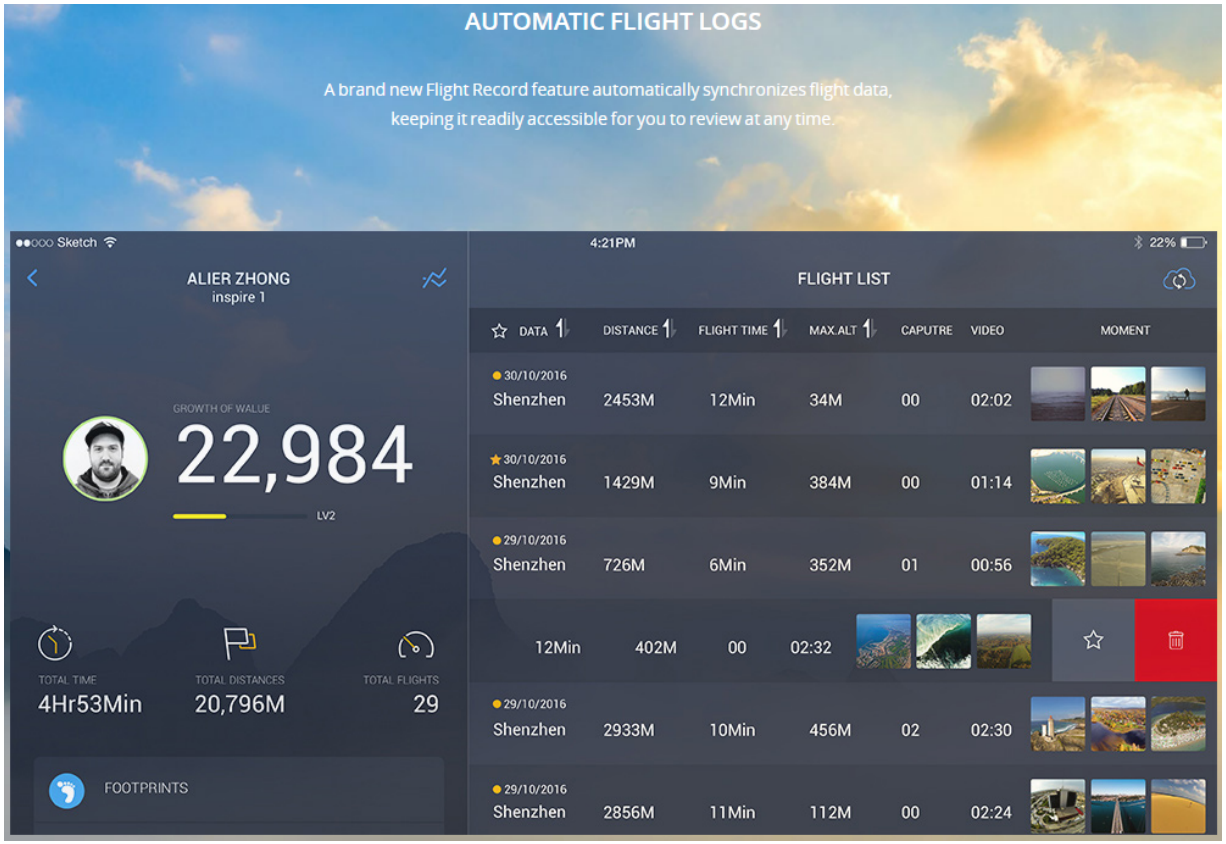 https://www.dji.com/goapp

	• **Telemetry Data** refers to data recorded regarding a drone's flight, including altitude, speed, distance, location (e.g., GPS coordinates). Telemetry data also includes a log of the user's control stick operation, which can be used for diagnostic purposes. In the DJI flight control app, this telemetry data is compiled into one log per flight called the "Flight Record." This data is first generated in the drone and the remote controller, and it is constantly transmitted to the mobile device connected to the remote controller, which communicates with the drone. After receiving this telemetry data, the mobile device stores the data locally as part of the flight control app. The flight control app does not automatically transmit telemetry data to DJI servers. To synchronize this telemetry data to DJI's servers for backup purposes, the user must manually use the "Sync" button on the DJI GO interface. One purpose of this "Sync" function is to allow DJI's aftersales service personnel to analyze a user's flight history in order to determine causes of drone malfunctions or crashes. Another is to provide a backup mechanism for our users who need to maintain flight records, as well as to allow a single user account to be used with a common set of flight logs across multiple mobile devices. https://security.dji.com/news?newsId=case-4&lang=en_US • **Obstacle Avoidance Data** is recorded by the obstacle avoidance image sensors (e.g., the two "eyes" at the front of Mavic or Phantom 4). This feature helps to protect buildings, people, and animals from drone collisions. This type of imaging data is limited to low resolution video, with no audio. Like telemetry data, DJI sometimes analyzes obstacle avoidance data to determine causes of drone malfunctions or crashes. The flight control app does not automatically transmit obstacle avoidance data to DJI servers. Obstacle avoidance data may only be transmitted in response to manual triggering in the flight control app. The flight control app does not permit automatic transmission of obstacle avoidance data. https://security.dji.com/news?newsId=case-4&lang=en_US • **Photography/Videography Data** includes photos and video recorded by the drone's main camera sensors. This data is stored on board the drone in an SD card. The user may also choose to save lower-resolution versions of the photography/videography data locally within the flight control app on the user's mobile device. The flight control app does not automatically transmit any photography/videography data to DJI servers. Instead, each time a user wants to share this data, the user must manually turn on the sharing feature. https://security.dji.com/news?newsId=case-4&lang=en_US

1[i] wherein the avionics system is configured to monitor aircraft flight performance data from the sensor; and	The Accused DJI Drones, include an avionics system that is configured to monitor aircraft flight performance data from the sensor. 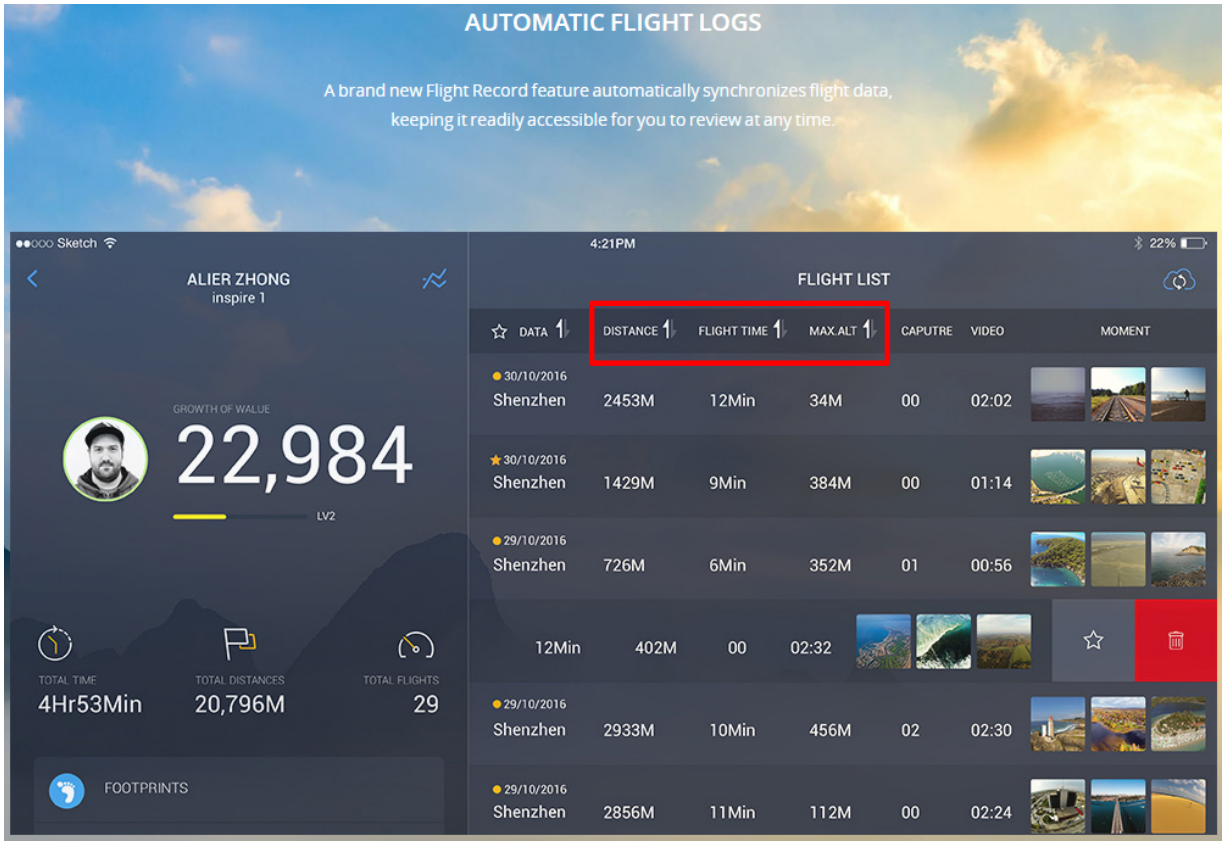 https://www.dji.com/goapp **Flight Recorder** Flight data including flight telemetry, aircraft status information, and other parameters are automatically saved to the internal data recorder of the aircraft. The data can be accessed using DJI Assistant 2 (Consumer Drones Series).

	Introduction DJI aircraft caries telemetry system for the safety of the pilots and persons on the ground during flights. Telemetry from an on-board flight system is the primary source of real-time measurement and status information transmitted to the pilot. DJI Onboard SDK provides API to read telemetry data in real time in subscription or broadcast fashion. Example of the data include: • Sensor readings such as gyroscope and magnetometer • Fusion data such as attitude and global position • Aircraft information such as battery, gimbal, and flight status https://developer.dji.com/onboard-sdk/documentation/guides/component-guide-telemetry.html
1[j] wherein the pilot identification information is entered directly into the input device of the transceiver.	The Accused DJI Drones are configured for the pilot identification information to be entered directly into the input device of the transceiver. For example, the transceiver includes a touchscreen that allows the pilot to enter identification information (e.g., DJI login credentials). 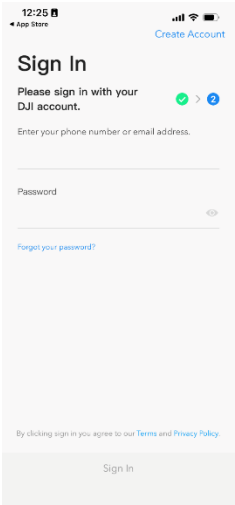 Screenshot from the DJI GO application for iOS

[2] The aircraft of claim 1, wherein the transceiver is portable.	The Accused DJI Drones have transceivers that are portable (e.g., RC controllers and/or mobile phones). 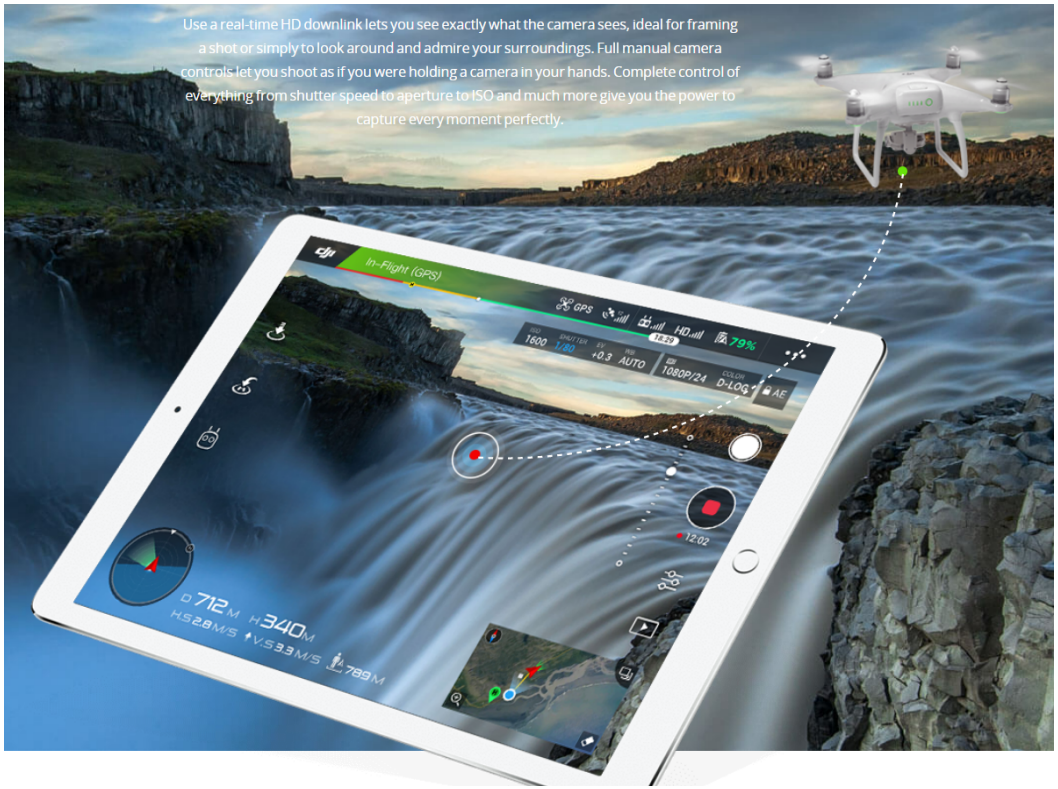 https://www.dji.com/goapp

	SWIPE TO FLY OR LAND /TRACK YOUR ENTIRE FLIGHT Auto take-off and land your aircraft with just a swipe of the finger on your smart device. Track your aircraft's position and heading with a glance at a map. You can also use this map to set a new home point and even activate Return to Home, making flying easy and simple. https://www.dji.com/goapp
[3] The aircraft of claim 2, wherein the transceiver is a smartphone.	The Accused DJI Drones include RC controllers that include a smartphone as the transceiver. SWIPE TO FLY OR LAND /TRACK YOUR ENTIRE FLIGHT Auto take-off and land your aircraft with just a swipe of the finger on your smart device. Track your aircraft's position and heading with a glance at a map. You can also use this map to set a new home point and even activate Return to Home, making flying easy and simple. https://www.dji.com/goapp

	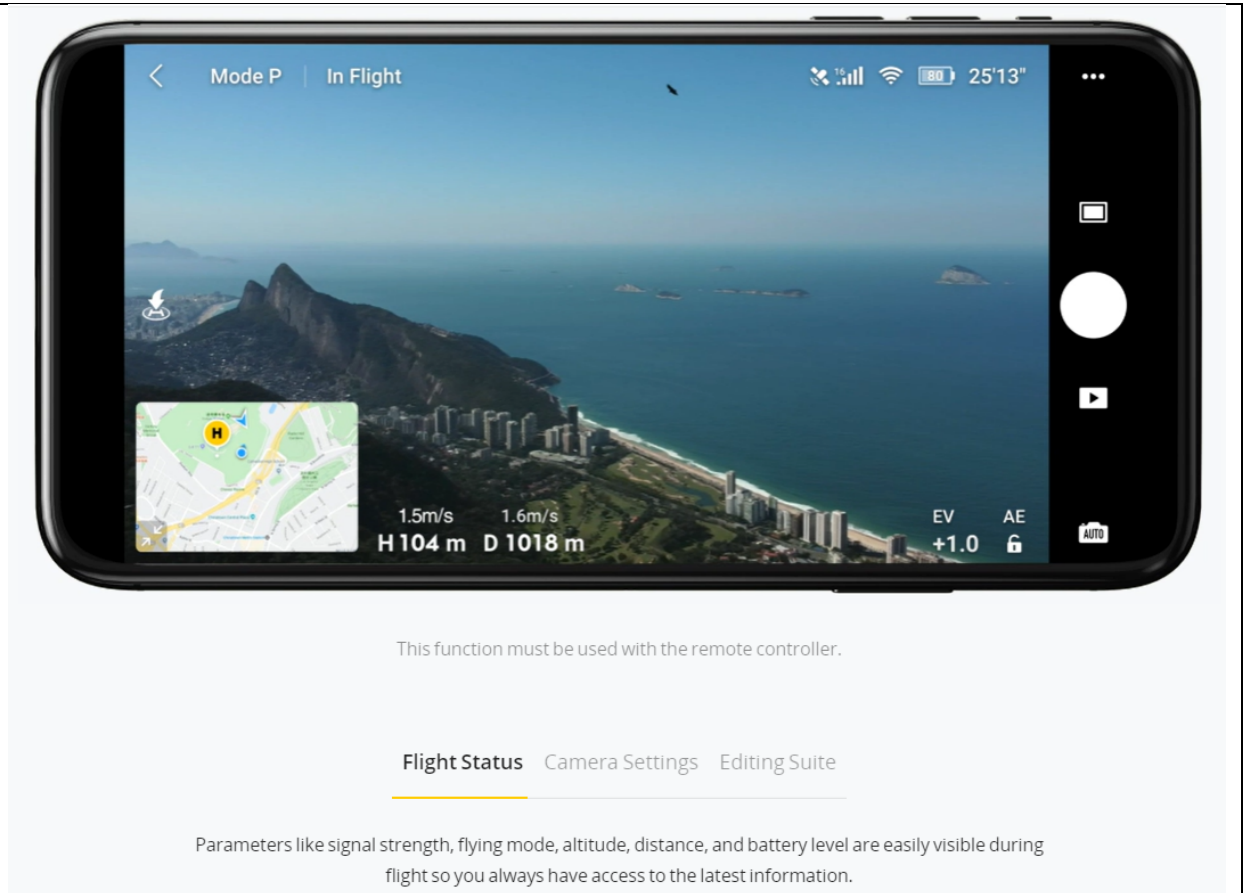 https://www.dji.com/dji-fly
[4] The aircraft of claim 1, wherein the transceiver is configured to upload data to the avionics system via the wireless transmitter.	The Accused DJI Drones include have transceivers that are configured to upload data to the avionics system via the wireless transmitter. For example, Accused DJI Drones include RC controllers that are configured to upload data (e.g., drone commands, flight routes) to the flight controller of the drones via the wireless transmitter in the drones.

	DJI Mavic 3 User Manual DJI RC Pro 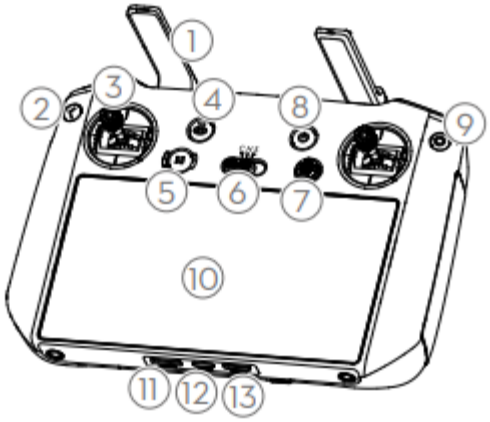 1. Antennas Relay aircraft control and video wireless signals. https://dl.djicdn.com/downloads/DJI_Mavic_3/DJI_Mavic_3_User_Manual_v2.0_en.pdf

Advanced Pilot Assistance Systems (APAS 5.0)

The Advanced Pilot Assistance Systems 5.0 (APAS 5.0) feature is available in Normal and Cine mode. When APAS is enabled, the aircraft continues to respond to user commands and plans its path according to control stick inputs and the flight environment. APAS makes it easier to avoid obstacles, obtain smoother footage, and gives a better flying experience.

Keep moving the control sticks in any directions. The aircraft will avoid the obstacles by flying above, below, or to the left or right of the obstacle. The aircraft can also response to the control stick inputs while avoiding obstacles.

https://dl.djicdn.com/downloads/DJI_Mavic_3/DJI_Mavic_3_User_Manual_v1.4_en.pdf, 30

Controlling the Aircraft

Three preprogrammed modes (Mode 1, Mode 2, and Mode 3) are available and custom modes can be configured in DJI Fly. The default mode is Mode 2.

Mode 1

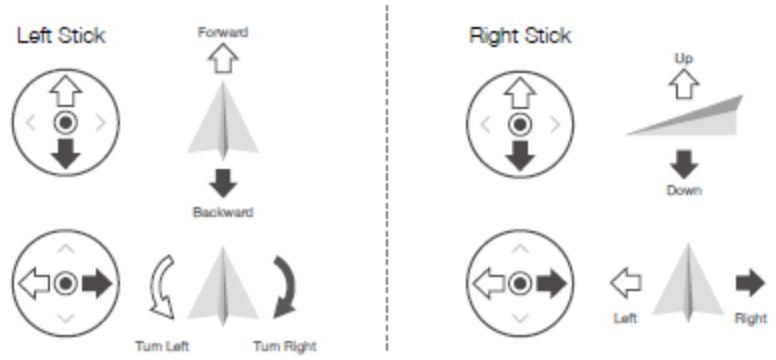

https://dl.djicdn.com/downloads/DJI_Mavic_3/DJI_Mavic_3_User_Manual_v1.4_en.pdf, 42

	Waypoints The aircraft automatically takes photos on a flight path of two to five waypoints and generates a timelapse video. The aircraft can fly in order from waypoint 1 to 5 or 5 to 1. Follow the steps below to use Waypoints. 1. Set the desired waypoints and the lens direction. 2. Set the interval time, video duration, and max speed. The screen displays the number of photos that will be taken and how long the shooting time will be. 3. Tap the shutter button to begin. The aircraft will generate a timelapse video automatically, which is viewable in playback. In the camera settings, users can select to save the footage in JPEG or RAW format and to store the footage in the built-in storage or the microSD card. https://dl.djicdn.com/downloads/DJI_Mavic_3/DJI_Mavic_3_User_Manual_v1.4_en.pdf, 27 Are there any upgrades to the QuickTransfer of Mavic 3 compared with the previous version? ^ With the new Wi-Fi 6 protocol, data transmission is even faster, with download speeds reaching up to 80MB/s. In addition, compared to DJI Mini 2, Mavic 3 automatically selects the fastest transmission mode based on the wireless environment without switching to Wi-Fi mode manually, making it easier to use. https://www.dji.com/mavic-3/faq

	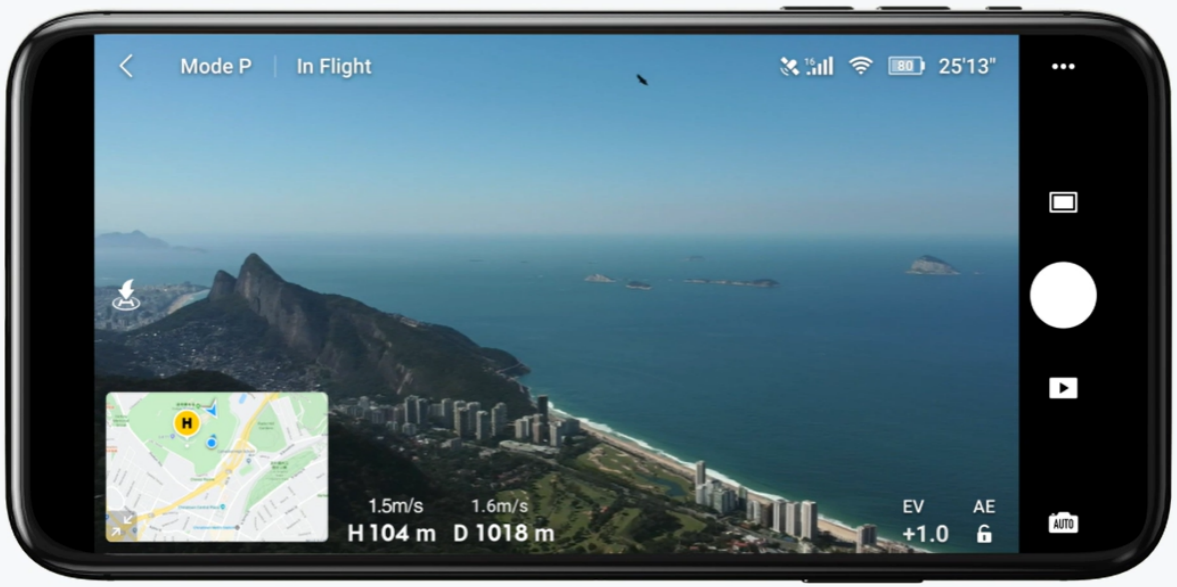 This function must be used with the remote controller. Flight Status Camera Settings Editing Suite Parameters like signal strength, flying mode, altitude, distance, and battery level are easily visible during flight so you always have access to the latest information. https://www.dji.com/dji-fly

	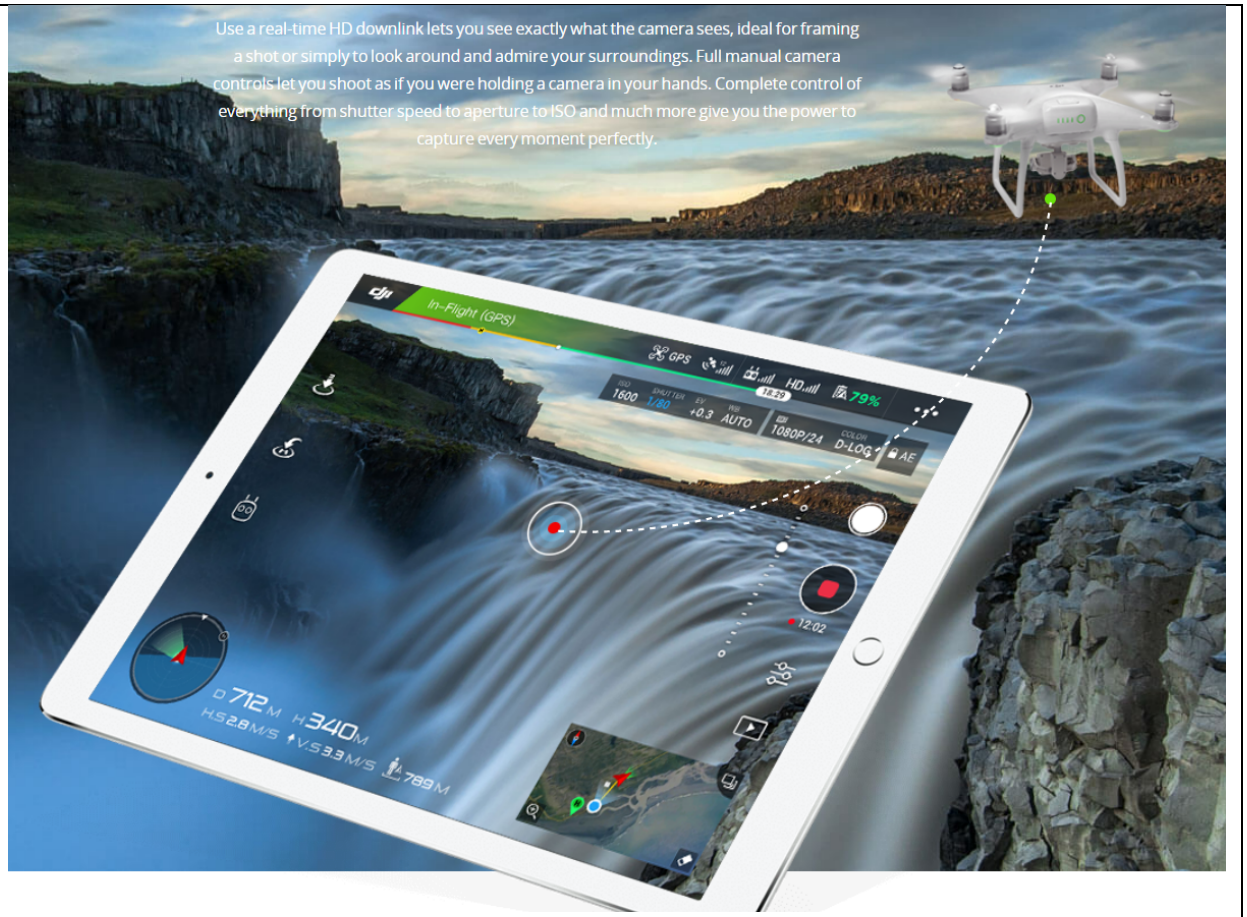 https://www.dji.com/goapp
[5] The aircraft of claim 4, wherein the uploaded data is a flight planning data.	The Accused DJI Drones include transceivers that upload flight planning data to the avionics system via the wireless transmitter where the uploaded data is a flight planning data. For example, the Accused DJI Drones include RC controllers that are configured to upload flight planning data (e.g., Waypoints) to the flight controller of the aircraft. See Claim 4.

	See also below, examples of flight planning data that is uploaded from the RC controller to the aircraft's flight controller. https://www.youtube.com/watch?v=nT6HLmTfh8s

	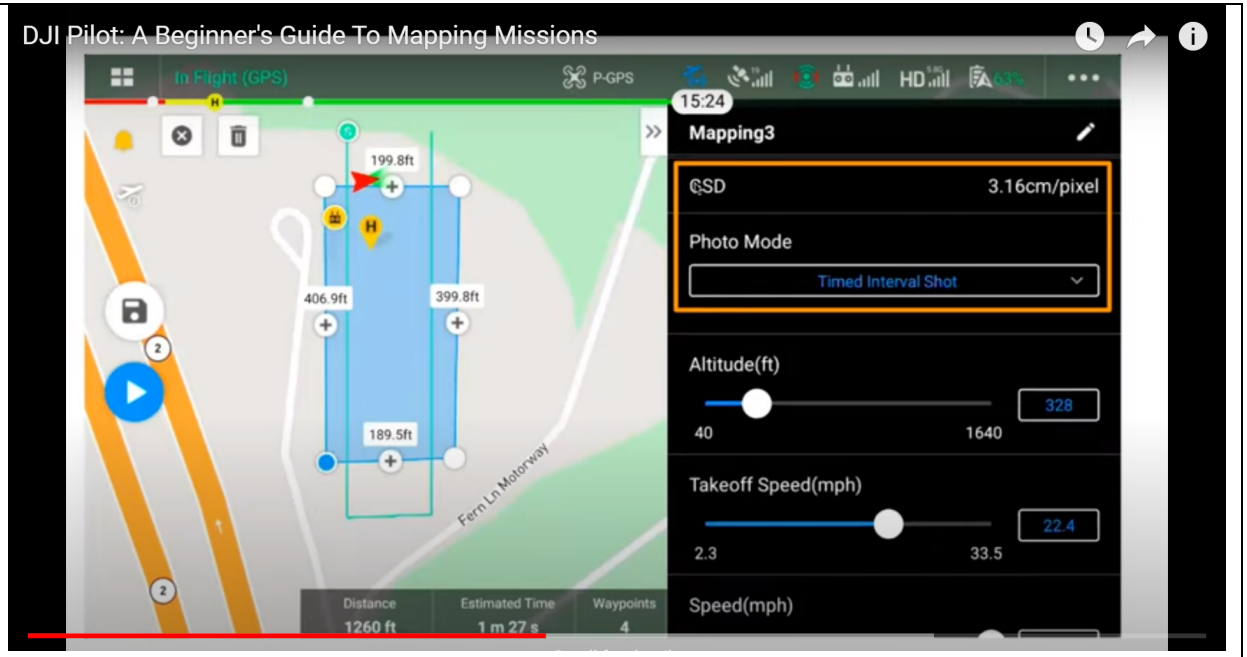 https://www.youtube.com/watch?v=92RgLBJcViI
[8] The aircraft of claim 1, wherein the transceiver is configured to receive and store aircraft flight performance data.	The Accused DJI Drones, include a transceiver that is configured to receive and store aircraft flight performance data. For example, the Accused DJI Drones include an RC controller and/or mobile phone which connects to a transceiver, including a smart phone, to receive and store aircraft flight performance data.

	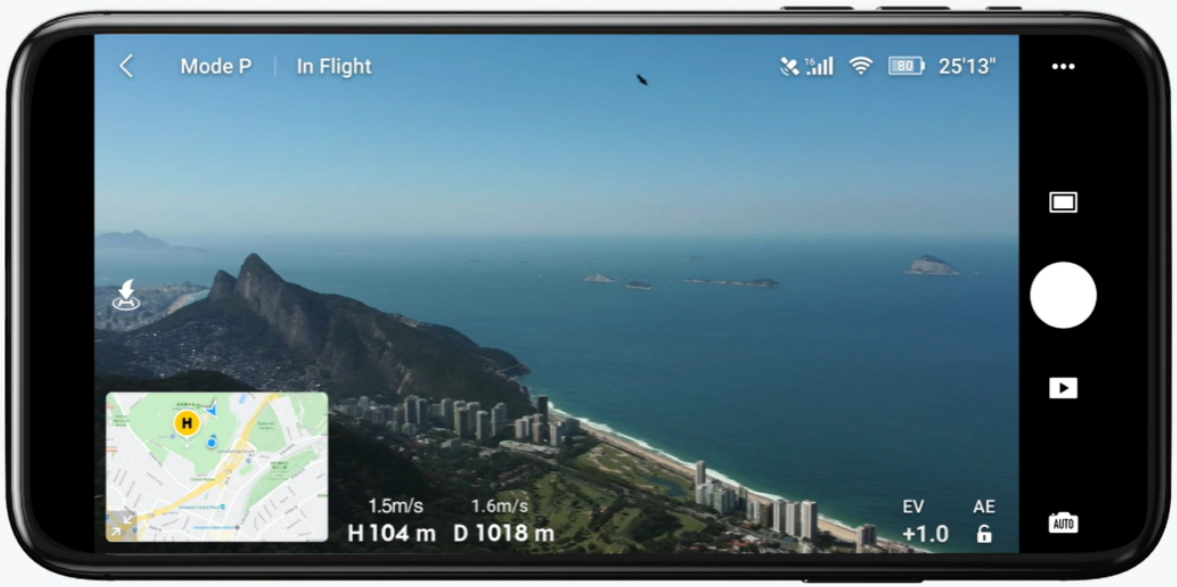 This function must be used with the remote controller. Flight Status Camera Settings Editing Suite Parameters like signal strength, flying mode, altitude, distance, and battery level are easily visible during flight so you always have access to the latest information. https://www.dji.com/dji-fly

	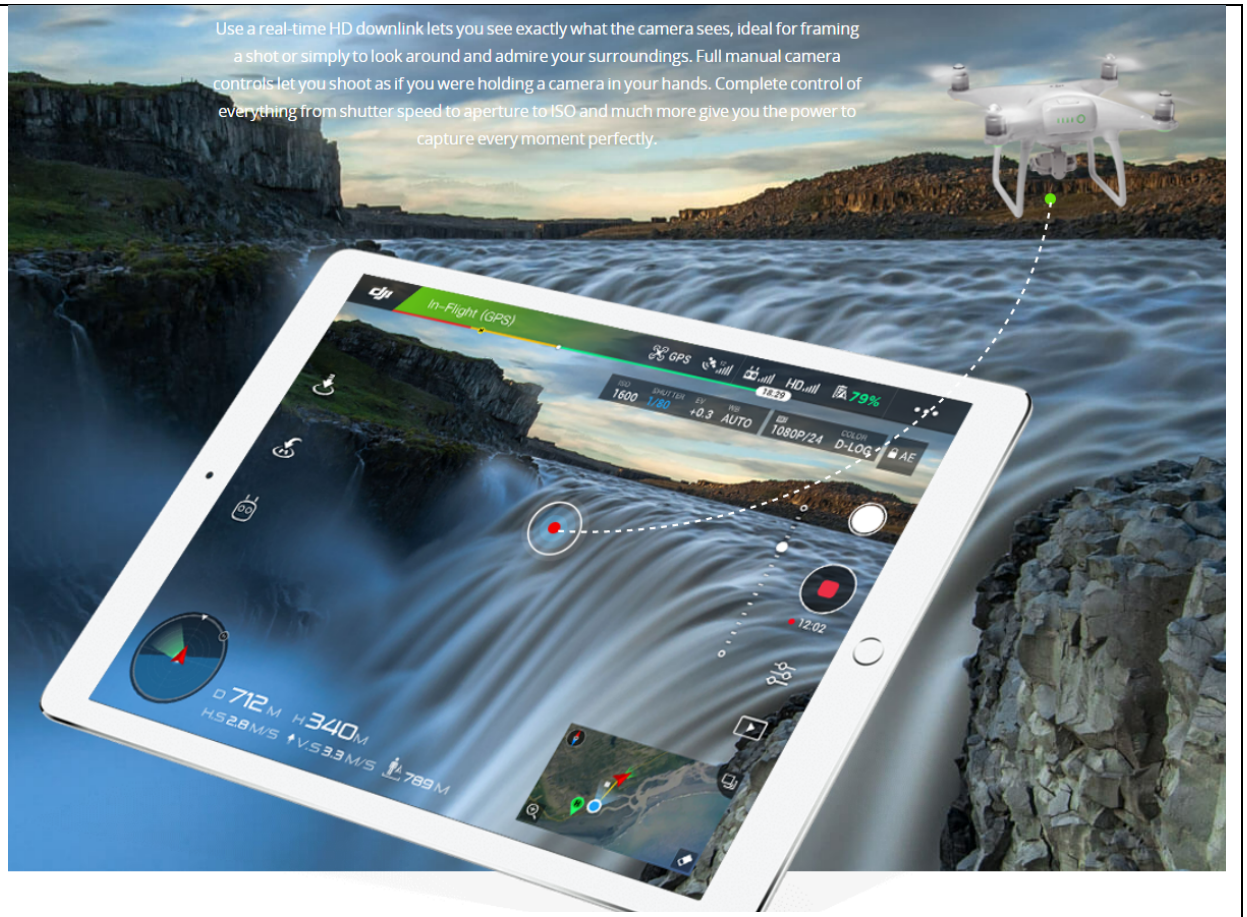 https://www.dji.com/goapp

	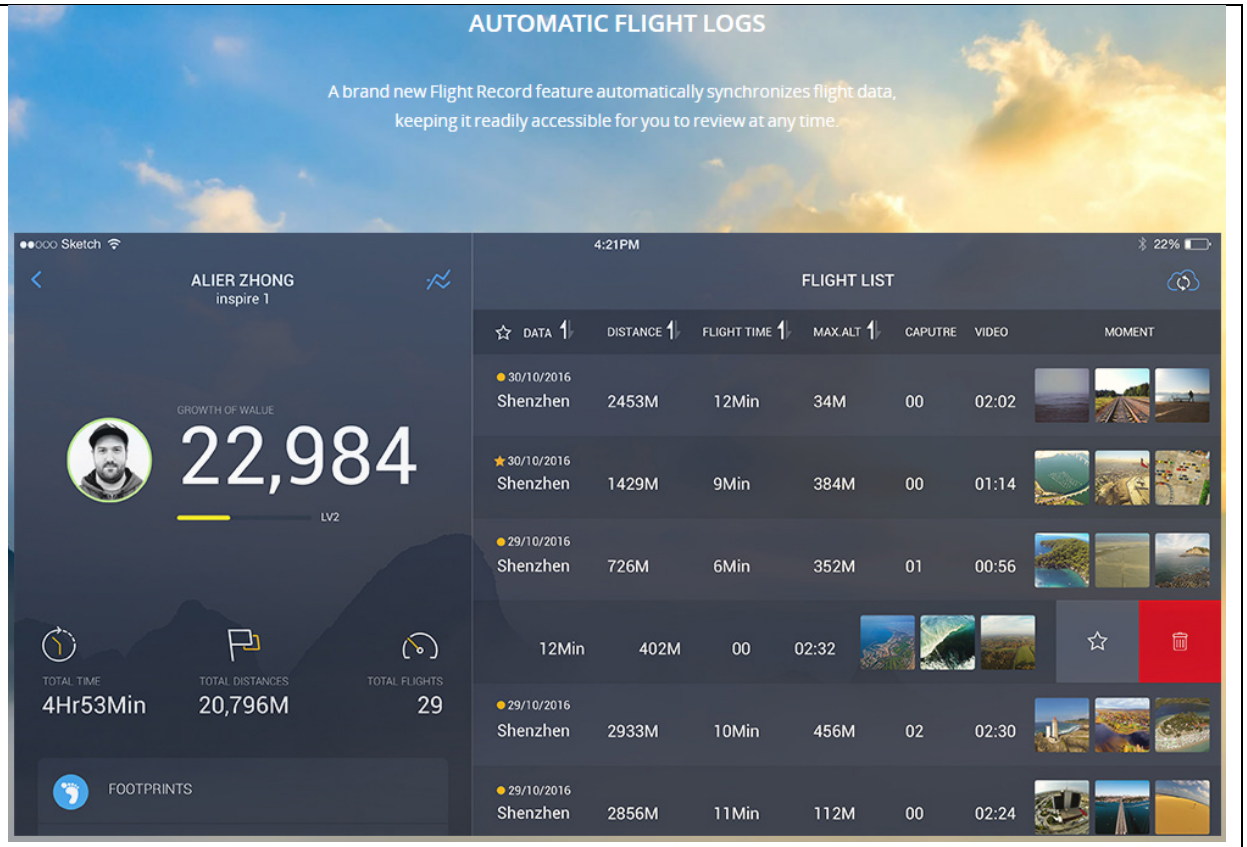 https://www.dji.com/goapp
9[pre] An aircraft flight performance monitoring system, comprising:	If the preamble is limiting, the Accused DJI Drones include an aircraft flight performance monitoring system that satisfies the below-recited limitations. For example, the Accused DJI Drones include a flight recorder that stores to internal storage and/or broadcasts flight telemetry, aircraft status, and other parameters during flight of the aircraft. The drone's flight recorder data, along with additional data cited below, are components of DJI's flight performance monitoring system. Each of the Accused DJI Drones also include a DJI mobile application that receives flight performance data (along with any

	additional data relating to flight and/or flight performance) from the aircraft and permit performance monitoring of the aircraft during flight. 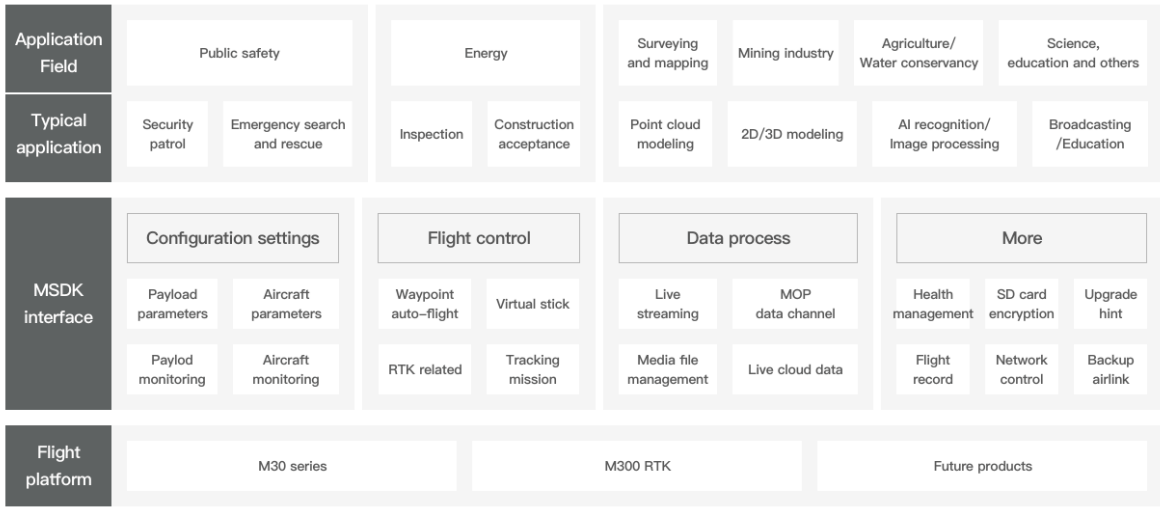 https://developer.dji.com/mobile-sdk/ **Flight Recorder** Flight data including flight telemetry, aircraft status information, and other parameters are automatically saved to the internal data recorder of the aircraft. The data can be accessed using DJI Assistant 2 (Consumer Drones Series). https://dl.djicdn.com/downloads/DJI_Mavic_3/DJI_Mavic_3_User_Manual_v1.4_en.pdf, 31

	Flight Record Sample 2022-08-25 No Rating Github Edit **Sample Introduction** The flight record module is to provide users with a way to determine responsibility and locate problems. If the user's drone is lost and the flight control log of the drone cannot be obtained, the flight records saved on the App can be analyzed. **Interface Calling Process** The two interfaces used by the flight record module are: • Get the path to store flight logs: getFlightRecordPath() • Get the path of the flight controller compressed log: getFlyCLogPath() There is no obvious calling process relationship. For detailed usage, please check the **API documentation** of Mobile SDK. https://developer.dji.com/doc/mobile-sdk-tutorial/en/tutorials/flight-record.html#sample-acquisition • **Telemetry Data** refers to data recorded regarding a drone's flight, including altitude, speed, distance, location (e.g., GPS coordinates). Telemetry data also includes a log of the user's control stick operation, which can be used for diagnostic purposes. In the DJI flight control app, this telemetry data is compiled into one log per flight called the "Flight Record." This data is first generated in the drone and the remote controller, and it is constantly transmitted to the mobile device connected to the remote controller, which communicates with the drone. After receiving this telemetry data, the mobile device stores the data locally as part of the flight control app. The flight control app does not automatically transmit telemetry data to DJI servers. To synchronize this telemetry data to DJI's servers for backup purposes, the user must manually use the "Sync" button on the DJI GO interface. One purpose of this "Sync" function is to allow DJI's aftersales service personnel to analyze a user's flight history in order to determine causes of drone malfunctions or crashes. Another is to provide a backup mechanism for our users who need to maintain flight records, as well as to allow a single user account to be used with a common set of flight logs across multiple mobile devices. https://security.dji.com/news?newsId=case-4&lang=en_US

	Sensors The Flight controller manages several sub components of the aircraft including sensors and landing gear. https://developer.dji.com/onboard-sdk/documentation/guides/component-guide-flight-control.html Introduction DJI aircraft caries telemetry system for the safety of the pilots and persons on the ground during flights. Telemetry from an on-board flight system is the primary source of real-time measurement and status information transmitted to the pilot. DJI Onboard SDK provides API to read telemetry data in real time in subscription or broadcast fashion. Example of the data include: • Sensor readings such as gyroscope and magnetometer • Fusion data such as attitude and global position • Aircraft information such as battery, gimbal, and flight status https://developer.dji.com/onboard-sdk/documentation/guides/component-guide-telemetry.html

	Broadcast In data broadcast mechanism, the data package arrives at a pre-configured frequency. The frequency can be modified across your application via DJI Onboard API or it can be changed via DJI Assistant 2 before the flight. Available Broadcast Data Broadcast data arives in a package containing state information for components listed below: • **Timestamp** • **Hardware Synchronization Timestamp** • **Quaternion** • **Angular Rate** • **Velocity** • **Gyroscope Reading** • **Global Position** • **Relative Position** • **GPS** • **RTK** • **Magnetometer** • **Remote Controller** • **Gimbal** • **Flight Status** • **Battery** https://developer.dji.com/onboard-sdk/documentation/guides/component-guide-telemetry.html

	Aircraft DJI Mavic 3 contains a flight controller, video downlink system, vision systems, infrared sensing system, propulsion system, and an Intelligent Flight Battery. https://dl.djicdn.com/downloads/DJI_Mavic_3/DJI_Mavic_3_User_Manual_v2.0_en.pdf **Aircraft Status Indicators** DJI Mavic 3 has front LEDs and aircraft status indicators. 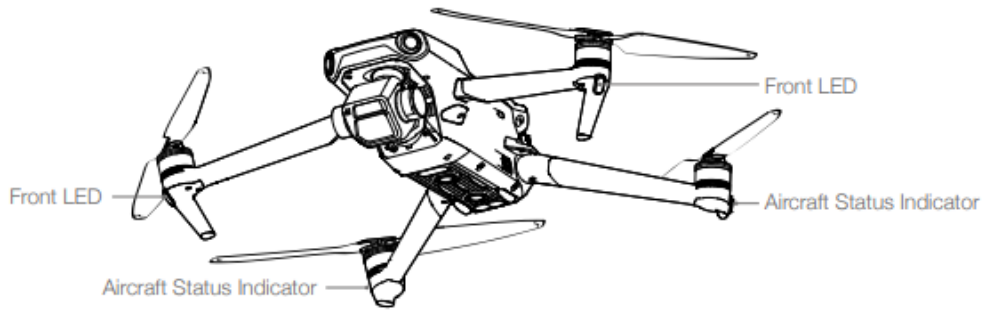 https://dl.djicdn.com/downloads/DJI_Mavic_3/DJI_Mavic_3_User_Manual_v2.0_en.pdf

https://www.dji.com/mavic-3?site=brandsite&from=nav

Introduction

DJI aircraft caries telemetry system for the safety of the pilots and persons on the ground during flights. Telemetry from an on-board flight system is the primary source of real-time measurement and status information transmitted to the pilot. DJI Onboard SDK provides API to read telemetry data in real time in subscription or broadcast fashion.

Example of the data include:

- Sensor readings such as gyroscope and magnetometer
- Fusion data such as attitude and global position
- Aircraft information such as battery, gimbal, and flight status

https://developer.dji.com/onboard-sdk/documentation/guides/component-guide-telemetry.html

9[a] a wireless transmitter having memory, the wireless transmitter in data communication with an avionics system of an aircraft, the avionics system comprising a memory card interface and the wireless transmitter comprising a non-volatile memory card coupled to the memory card interface of the avionics system;	The Accused DJI Drones include a wireless transmitter having memory, the wireless transmitter in data communication with an avionics system of an aircraft, the avionics system comprising a memory card interface and the wireless transmitter comprising a non-volatile memory card coupled to the memory card interface of the avionics system. For example, each of the Accused DJI Drones include a wireless transmitter (e.g. WiFi, OcuSync, Lightbridge, and/or Auxiliary transmitters), which is in data communication with an avionics system of the aircraft (e.g., a flight controller and/or data processing system of the aircraft) that includes a memory card interface (e.g., an interface to the "microSD Card Slot"). The aircraft's wireless transmitters are in communication with drone flight controller and the wireless transmitter comprises a non-volatile memory card (e.g., microSD card) coupled to the memory card interface of the flight controller. AirLink 2017-06-27 Introduction AirLink describes the wireless link between aircraft, remote controllers, handheld cameras and mobile devices. There are four types of wireless links used in DJI products: • WiFi • OcuSync • Lightbridge • Auxiliary Wireless communication links provide great flexibility, but also have limitations. The link will degrade as obstacles come between the devices communicating wirelessly, as the separation between devices increases, and as interference with other communication links increases. A table detailing the type of wireless link for all aircraft products can be found in the Product Introduction. Osmo is not included in this table and uses the WiFi wireless link between itself and mobile device. https://developer.dji.com/mobile-sdk/documentation/introduction/component-guide-airlink.html

	• **Telemetry Data** refers to data recorded regarding a drone's flight, including altitude, speed, distance, location (e.g., GPS coordinates). Telemetry data also includes a log of the user's control stick operation, which can be used for diagnostic purposes. In the DJI flight control app, this telemetry data is compiled into one log per flight called the "Flight Record." This data is first generated in the drone and the remote controller, and it is constantly transmitted to the mobile device connected to the remote controller, which communicates with the drone. After receiving this telemetry data, the mobile device stores the data locally as part of the flight control app. The flight control app does not automatically transmit telemetry data to DJI servers. To synchronize this telemetry data to DJI's servers for backup purposes, the user must manually use the "Sync" button on the DJI GO interface. One purpose of this "Sync" function is to allow DJI's aftersales service personnel to analyze a user's flight history in order to determine causes of drone malfunctions or crashes. Another is to provide a backup mechanism for our users who need to maintain flight records, as well as to allow a single user account to be used with a common set of flight logs across multiple mobile devices. https://security.dji.com/news?newsId=case-4&lang=en_US Sensors The Flight controller manages several sub components of the aircraft including sensors and landing gear. https://developer.dji.com/onboard-sdk/documentation/guides/component-guide-flight-control.html

	Introduction DJI aircraft caries telemetry system for the safety of the pilots and persons on the ground during flights. Telemetry from an on-board flight system is the primary source of real-time measurement and status information transmitted to the pilot. DJI Onboard SDK provides API to read telemetry data in real time in subscription or broadcast fashion. Example of the data include: • Sensor readings such as gyroscope and magnetometer • Fusion data such as attitude and global position • Aircraft information such as battery, gimbal, and flight status https://developer.dji.com/onboard-sdk/documentation/guides/component-guide-telemetry.html

	Broadcast In data broadcast mechanism, the data package arrives at a pre-configured frequency. The frequency can be modified across your application via DJI Onboard API or it can be changed via DJI Assistant 2 before the flight. Available Broadcast Data Broadcast data arives in a package containing state information for components listed below: • **Timestamp** • **Hardware Synchronization Timestamp** • **Quaternion** • **Angular Rate** • **Velocity** • **Gyroscope Reading** • **Global Position** • **Relative Position** • **GPS** • **RTK** • **Magnetometer** • **Remote Controller** • **Gimbal** • **Flight Status** • **Battery** https://developer.dji.com/onboard-sdk/documentation/guides/component-guide-telemetry.html **Flight Recorder** Flight data including flight telemetry, aircraft status information, and other parameters are automatically saved to the internal data recorder of the aircraft. The data can be accessed using DJI Assistant 2 (Consumer Drones Series). https://dl.djicdn.com/downloads/DJI_Mavic_3/20220531/DJI_Mavic_3_User_Manual_v1.6_en.pdf

Video Transmission

Video Transmission System	O3+
Live View Quality	Remote Controller: 1080p@30fps/1080p@60fps
Operation Frequency	2.400-2.4835 GHz 5.725-5.850 GHz
Max Transmission Distance (unobstructed, free of interference and aligned with controller)	2.400-2.4835 GHz; 5.725-5.850 GHz FCC: 15 km CE: 8 km SRRC: 8 km MIC: 8 km
Signal Transmission Ranges (FCC)	Strong Interference (urban landscape, limited line of sight, many competing signals): Approx. 1.5-3 km Medium Interference (suburban landscape, open line of sight, some competing signals): Approx. 3-9 km Low Interference (open landscape abundant line of sight, few competing signals): Approx. 9-15 km Data is tested under different standards in open areas free of interference. It only refers to the maximum, one-way flight distance without considering Return to Home. Please pay attention to RTH prompts in the DJI Fly app during actual flight.
Max Download Bitrate	O3+: 5.5MB/s (with RC-N1 remote controller) 15MB/s (with DJI RC Pro remote controller) Wi-Fi 6: 80MB/s
Latency (depending on environmental conditions and mobile device)	130 ms (with RC-N1 remote controller) 120 ms (with DJI RC Pro remote controller)
Antennas	4 antennas, 2T4R
Transmitter Power (EIRP)	2.4 GHz: ≤33 dBm (FCC); ≤20 dBm (CE/SRRC/MIC) 5.8 GHz: ≤33 dBm (FCC), ≤30 dBm(SRRC), ≤14 dBm(CE)

https://www.dji.com/mavic-3/specs

	State The flight controller provides detailed state information at up to 10 Hz including: • Aircraft position, velocity and altitude • Remaining Battery and Flight time information • Home location • Sensor information (compass, IMU, Satellite positioning) • Return home status • Whether motors are on and aircraft is flying or not • Flight limitation and GEO system information https://developer.dji.com/mobile-sdk/documentation/introduction/component-guide-flightController.html. The memory card interface of the Accused DJI Drones' avionics system is shown as element 17 of the diagram below:

Aircraft

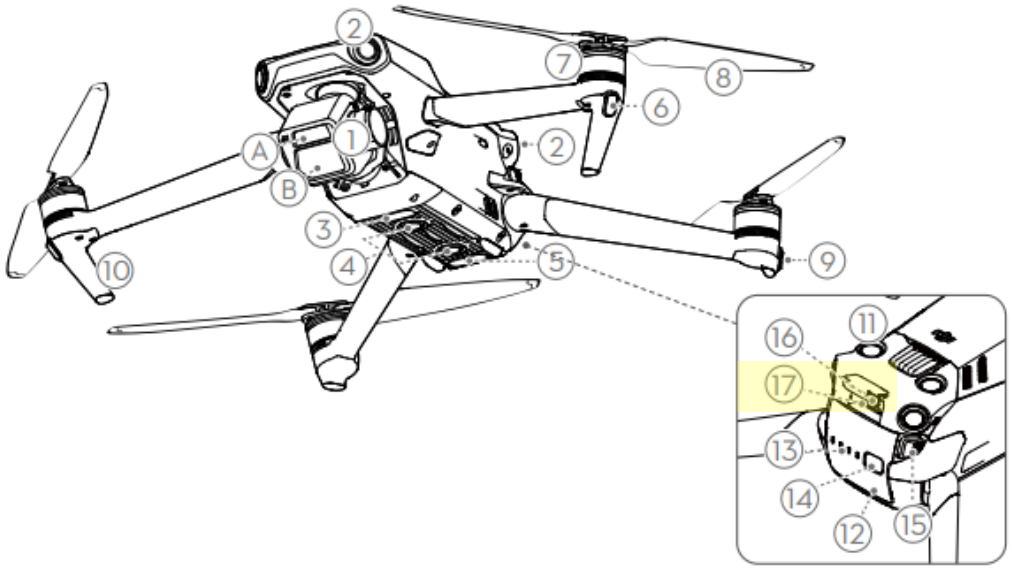

1. Gimbal and Camera
   A. Tele Camera
   B. Hasselblad L2D-20c Camera
2. Horizontal Omnidirectional Vision System
3. Auxiliary Bottom Light
4. Downward Vision System
5. Infrared Sensing System
6. Front LEDs
7. Motors
8. Propellers
9. Aircraft Status Indicators
10. Landing Gears (Built-in antennas)
11. Upward Vision System
12. Intelligent Flight Battery
13. Battery Level LEDs
14. Power Button
15. Battery Buckles
16. USB-C Port
17. microSD Card Slot

https://dl.djicdn.com/downloads/DJI_Mavic_3/DJI_Mavic_3_User_Manual_v1.0_en.pdf

	The aircraft will generate a timelapse video automatically, which is viewable in playback. In the camera settings, users can select to save the footage in JPEG or RAW format and to store the footage in the built-in storage or the microSD card. https://dl.djicdn.com/downloads/DJI_Mavic_3/DJI_Mavic_3_User_Manual_v1.4_en.pdf, 27 **Recommended microSD Cards**: Lexar 1066x 64GB V30 A2 microSDXC; Lexar 1066x 128GB V30 A2 microSDXC; Lexar 1066x 256GB V30 A2 microSDXC; Lexar 1066x 512GB V30 A2 microSDXC; SanDisk High Endurance 64GB V30 microSDXC; SanDisk High Endurance 128GB V30 microSDXC; SanDisk High Endurance 256GB V30 microSDXC; Kingston Canvas Go! Plus 64GB V30 A2 microSDXC; Kingston Canvas Go! Plus 128GB V30 A2 microSDXC; Kingston Canvas Go! Plus 256GB V30 A2 microSDXC; Kingston Canvas Go! Plus 512GB V30 A2 microSDXC; Samsung EVO Plus 512GB V30 A2 microSDXC; Samsung PRO Plus 256GB V30 A2 microSDXC; Samsung PRO Plus 512GB V30 A2 microSDXC **SSD Specs**: Mavic 3: 8 GB (available space is approx. 7.2 GB); Mavic 3 Cine: 1 TB (available space is approx. 934.8 GB) https://www.dji.com/mavic-3/specs The DJI RC Pro, for example, comprises a microSD Card as labeled 11 below:

DJI RC Pro

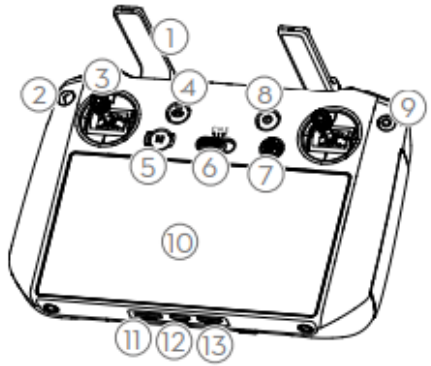

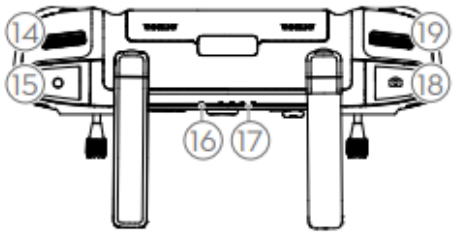

1. Antennas
   Relay aircraft control and video wireless signals.
2. Back Button
   Press once to return to the previous screen. Press twice to return to the home screen.
3. Control Sticks
   Use the control sticks to control the aircraft movements. Set the flight control mode in DJI

9. Confirm Button
   Press once to confirm a selection. The button does not have a function when using DJI Fly.
10. Touchscreen
    Touch the screen to operate the remote controller. Note that the touchscreen is not waterproof. Operate with caution.
11. microSD Card Slot
    Use to insert a microSD card.

https://dl.djicdn.com/downloads/DJI_Mavic_3/DJI_Mavic_3_User_Manual_v2.0_en.pdf

	Aircraft DJI Mavic 3 contains a flight controller, video downlink system, vision systems, infrared sensing system, propulsion system, and an Intelligent Flight Battery. https://dl.djicdn.com/downloads/DJI_Mavic_3/DJI_Mavic_3_User_Manual_v1.4_en.pdf, 13 **Aircraft** DJI Mavic 3 contains a flight controller, video downlink system, vision systems, infrared sensing system, propulsion system, and an Intelligent Flight Battery. https://dl.djicdn.com/downloads/DJI_Mavic_3/DJI_Mavic_3_User_Manual_v1.4_en.pdf, 14 **Flight Modes** DJI Mavic 3 has three flight modes, plus a fourth flight mode that the aircraft switches to in certain scenarios. Flight modes can be switched via the Flight Mode switch on the remote controller. Normal Mode: The aircraft utilizes GNSS and the Forward, Backward, Lateral, Upward, and Downward Vision Systems and Infrared Sensing System to locate and stabilize itself. When the GNSS signal is strong, the aircraft uses GNSS to locate and stabilize itself. When the GNSS is weak but the lighting and other environment conditions are sufficient, the aircraft uses the vision systems to locate and stabilize itself. When the Forward, Backward, Lateral, Upward, and Downward Vision Systems are enabled and lighting and other environment conditions are sufficient, the maximum tilt angle is 30° and the maximum flight speed is 15 m/s.

Sport Mode: In Sport Mode, the aircraft uses GNSS for positioning and the aircraft responses are optimized for agility and speed making it more responsive to control stick movements. Note that obstacle sensing is disabled and the maximum flight speed is 21 m/s (19 m/s when flying in the EU).

https://dl.djicdn.com/downloads/DJI_Mavic_3/DJI_Mavic_3_User_Manual_v1.4_en.pdf, 14

Vision Systems and Infrared Sensing System

DJI Mavic 3 is equipped with both an Infrared Sensing System and Forward, Backward, Lateral, Upward, and Downward Vision Systems.

The Upward and Downward Vision Systems consist of two cameras each, and the Forward, Backward, and Lateral Vision Systems consist of four cameras in total.

The Infrared Sensing System consists of two 3D infrared modules. The Downward Vision System and Infrared Sensing System helps the aircraft maintain its current position, hover in place more precisely, and to fly indoors or in other environments where GNSS is unavailable.

In addition, the Auxiliary Bottom Light located on the underside of the aircraft improves visibility for the Downward Vision System in weak light conditions.

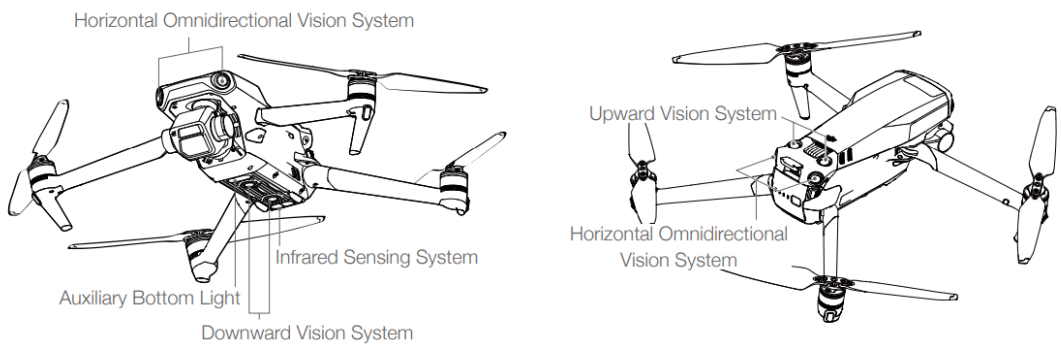

https://dl.djicdn.com/downloads/DJI_Mavic_3/DJI_Mavic_3_User_Manual_v1.4_en.pdf, 21

	Using the Vision Systems When GNSS is unavailable, the Downward Vision System is enabled if the surface has a clear texture and sufficient light. The Forward, Backward, Lateral, and Upward Vision Systems will activate automatically when the aircraft is powered on if the aircraft is in Normal or Cine mode and Obstacle Avoidance is set to Bypass or Brake in DJI Fly. The aircraft can actively brake when detecting obstacles when using the Forward, Backward, Lateral, and Upward Vision Systems. The Forward, Backward, Lateral, and Upward Vision Systems work best with adequate lighting and clearly marked or textured obstacles. Due to inertia, users must make sure to brake the aircraft within a reasonable distance. https://dl.djicdn.com/downloads/DJI_Mavic_3/DJI_Mavic_3_User_Manual_v1.4_en.pdf, 22 The N3 is a third generation NAZA™ flight control system designed for serious multi-rotor enthusiasts. It is a reliable and robust system with double IMUs and can be expanded with external high-performance sensors. It uses advanced control algorithms and sensor fusion algorithms to maintain complete stability and integrity of the aerial system. The N3 is fully compatible with the DJI™ Onboard and Mobile SDKs and other DJI products, allowing developers to optimize the system for specific applications. When used with DJI Lightbridge 2, it provides direct access to DJI GO features including Intelligent Flight Modes. With all essential components integrated into the N3 flight controller (including double IMUs, barometer and data recorder), the device is powerful and highly compact to work together with the GNSS-Compass module (including GPS and GLONASS), PMU module and LED module. https://dl.djicdn.com/downloads/N3/20170825/N3_User_Manual_En_v1.4.pdf, 4 System Components How the System Works The flight controller is the core module of the N3 fight control system, which utilizes the IMU, barometer, GNSS and compass to realize accurate attitude control and high-precision positioning for the aircraft. Multiple interfaces for SDK development and DJI devices, such as the Zenmuse Z15 gimbals, are also provided. The DJI Assistant 2 software allows you to configure parameters for installation, flight control, and other accessed devices. A simulator is also available for simulated flight practice. When used with the DJI Lightbridge 2, the N3 has direct access to features in the DJI GO app such as Intelligent Flight Modes.

	https://dl.djicdn.com/downloads/N3/20170825/N3_User_Manual_En_v1.4.pdf, 4 **N3 and N3 Pro Parts** **Flight Controller** Feature Highlights 1. Independent CAN1 and CAN2 ports and API Serial port for the Onboard SDK. The CAN1 port is used to connect the GNSS-Compass and DJI devices while the CAN2 port is used to connect SDK devices. 2. Built-in inertial sensors for the measurement of aircraft attitude and built-in pressure sensor for the detection of aircraft altitude. 3. Support for multiple receiver types. If used with the DJI Lightbridge 2, the N3 has direct access to features in the DJI GO app such as Intelligent Flight Modes. 4. M1 to M8 are used to connect the ESCs of the aircraft and iESC for DJI Intelligent ESC communication. 5. 4 independent and configurable output ports and 4 I/O ports. These ports can be customized and connect other DJI devices (e.g. DJI Zenmuse Z15 gimbals, DJI Intelligent Landing Gear) or SDK devices. https://dl.djicdn.com/downloads/N3/20170825/N3_User_Manual_En_v1.4.pdf, 5. Flight Controller 2018-05-15 Introduction The flight controller is an onboard computer that combines control information from the pilot with sensor information to adjust the thrust at each propellor and fly the aircraft as desired. The flight controller is responsible for: • Flight control including motor control, taking off and landing, manual flight modes • Aircraft state information such as attitude, position, speed • Sensor sub components such as compasses, IMUs, and positioning systems. • Aircraft sub components such as the landing gear • Flight limitation systems such as GEO Zones and the GEO System • Aircraft flight simulation for testing and debugging A general description of fundamental flight control concepts can be found here.

	https://developer.dji.com/mobile-sdk/documentation/introduction/component-guide-flightController.html Flight Control Aircraft flight can be controlled in several ways: • **Manually**: Remote controller control sticks can be manipulated by the user • **Missions**: Simple high level flight automation • **Virtual Sticks**: Stick commands can be sent using DJI Mobile SDK APIs that simulate manual flight. • **Gestures**: Some aircraft (e.g. Spark) will perform basic flight maneuvers based on a gesture from the user. Flight Orientation The remote controller control sticks can be used to move the aircraft forward, backwards, left and right. However, if the direction of the aircraft isn't obvious, it can be difficult to control the aircraft predictably from pilot's perspective on the ground. Several flight orientation modes are available to make flying easier: • **Course Lock**: The aircraft moves relative to a locked course heading. • **Home Lock**: The aircraft moves relative radially to the Home Point. • **Aircraft Heading**: The aircraft moves relative to the front of the aircraft. More details are described in Flight Control Concepts. https://developer.dji.com/mobile-sdk/documentation/introduction/component-guide-flightController.html Sensors The Flight controller manages several sub components of the aircraft including sensors and landing gear. https://developer.dji.com/mobile-sdk/documentation/introduction/component-guide-flightController.html

	Vision System and Intelligent Flight Assistant Cameras can be used to detect obstacles and accurately determine relative position and velocity. These cameras are typically mounted on the product facing downward for positioning and forward for obstacle detection. They are separate from the main camera used to capture photos and videos. https://developer.dji.com/mobile-sdk/documentation/introduction/component-guide-flightController.html
9[b] a database in data communication with the avionics system, the database being configured to store information relating to a pilot flying the aircraft during flight and flight performance of the aircraft during flight;	The Accused DJI Drones include a database in data communication with the avionics system, the database being configured to store information relating to a pilot flying the aircraft during flight and flight performance of the aircraft during flight. For example, each of the Accused DJI Drones includes a flight recorder that stores to internal storage and/or broadcasts flight telemetry, aircraft status, and other parameters during flight of the aircraft. The drone's flight recorder data, along with additional data cited below, are examples of information relating to a pilot flying the aircraft during flight and the flight performance of the aircraft during flight. Each of the Accused DJI Drones include a DJI mobile application that receives flight recorder data (along with any additional data relating to flight and/or flight performance) from the aircraft and stores the data in a database in data communication with the sensor and the avionics system (via, e.g., a wireless link to the aircraft). As shown below, for example, the DJI GO Application receives records and flight data collected by sensors on drones (e.g., flight recorder data) during flight automatically.

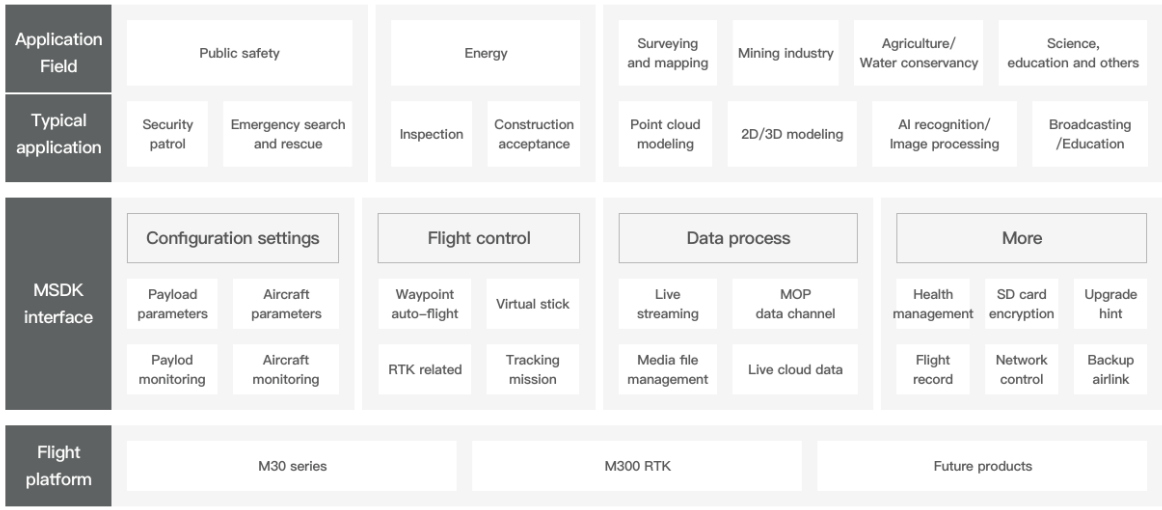

https://developer.dji.com/mobile-sdk/

Flight Recorder

Flight data including flight telemetry, aircraft status information, and other parameters are automatically saved to the internal data recorder of the aircraft. The data can be accessed using DJI Assistant 2 (Consumer Drones Series).

https://dl.djicdn.com/downloads/DJI_Mavic_3/DJI_Mavic_3_User_Manual_v1.4_en.pdf, 31

	Flight Record Sample 2022-08-25 No Rating Github Edit **Sample Introduction** The flight record module is to provide users with a way to determine responsibility and locate problems. If the user's drone is lost and the flight control log of the drone cannot be obtained, the flight records saved on the App can be analyzed. **Interface Calling Process** The two interfaces used by the flight record module are: • Get the path to store flight logs: getFlightRecordPath() • Get the path of the flight controller compressed log: getFlyCLogPath() There is no obvious calling process relationship. For detailed usage, please check the **API documentation** of Mobile SDK. https://developer.dji.com/doc/mobile-sdk-tutorial/en/tutorials/flight-record.html#sample-acquisition

	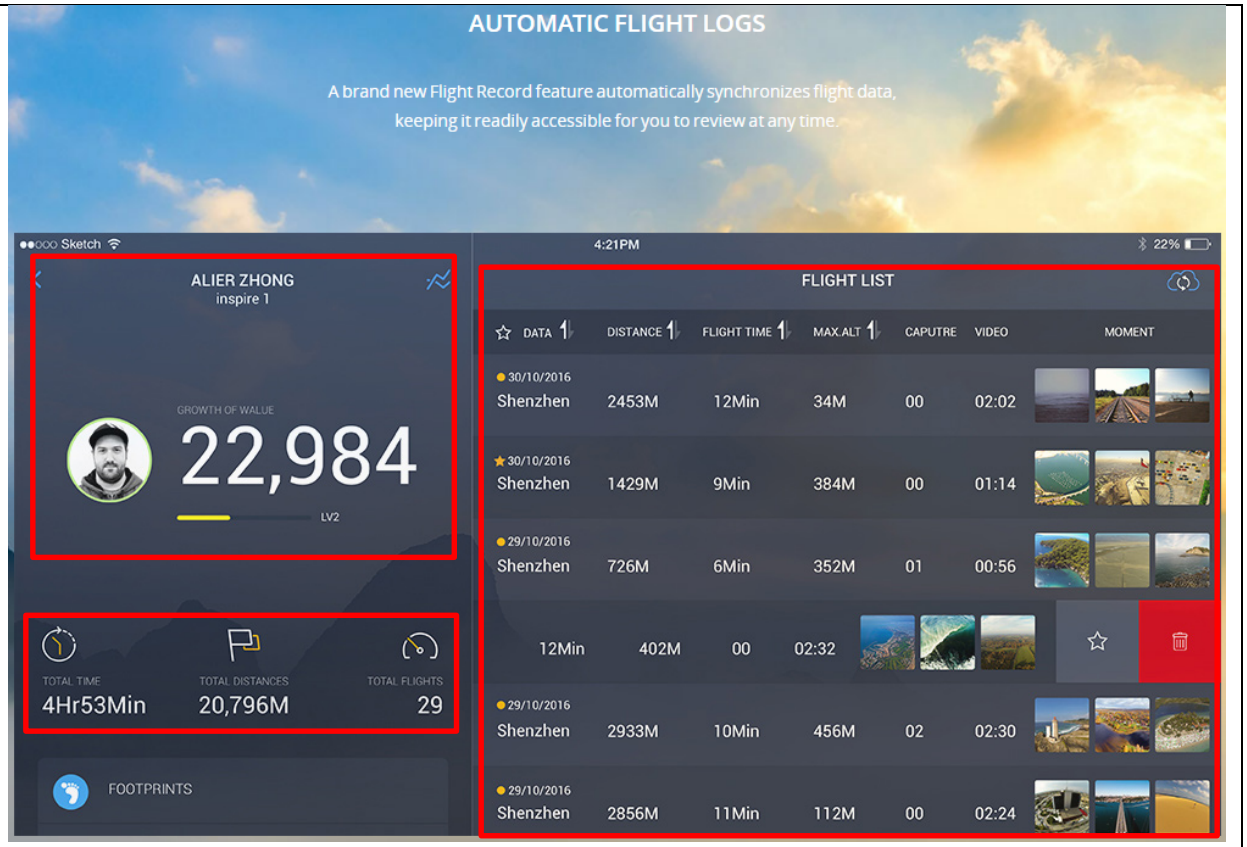 https://www.dji.com/goapp
9[c] a transceiver comprising an input device, the transceiver having a transceiver identity associated with pilot identification information, the transceiver being configured for receiving information relating to sensed flight performance from the wireless	The Accused DJI Drones include a transceiver comprising an input device, the transceiver having a transceiver identity associated with pilot identification information, the transceiver being configured for receiving information relating to sensed flight performance from the wireless transmitter, for associating the thus received information with the pilot identification information associated with the transceiver identity, and for transmitting the received information with the thus associated pilot identification information to the database.

transmitter, for associating the thus received information with the pilot identification information associated with the transceiver identity, and for transmitting the received information with the thus associated pilot identification information to the database;	For example, each of the Accused DJI Drones includes an RC controller comprising a wireless transceiver (in the RC controller and/or in an attached mobile phone) and input device (e.g., a touch screen) having a transceiver identity associated with pilot identification information (e.g., DJI account login credentials). The transceiver is configured for receiving information relating to sensed flight performance (e.g., flight recorder data and additional data cited below) from the wireless transmitter in the drone and associated the received information with the pilot identification information associated with the transceiver identity (e.g., DJI account login credentials). The wireless transceiver of the RC controller and/or mobile phone is also configured for transmitting the received information with the thus associated pilot identification to the database. • **Telemetry Data** refers to data recorded regarding a drone's flight, including altitude, speed, distance, location (e.g., GPS coordinates). Telemetry data also includes a log of the user's control stick operation, which can be used for diagnostic purposes. In the DJI flight control app, this telemetry data is compiled into one log per flight called the "Flight Record." This data is first generated in the drone and the remote controller, and it is constantly transmitted to the mobile device connected to the remote controller, which communicates with the drone. After receiving this telemetry data, the mobile device stores the data locally as part of the flight control app. The flight control app does not automatically transmit telemetry data to DJI servers. To synchronize this telemetry data to DJI's servers for backup purposes, the user must manually use the "Sync" button on the DJI GO interface. One purpose of this "Sync" function is to allow DJI's aftersales service personnel to analyze a user's flight history in order to determine causes of drone malfunctions or crashes. Another is to provide a backup mechanism for our users who need to maintain flight records, as well as to allow a single user account to be used with a common set of flight logs across multiple mobile devices. https://security.dji.com/news?newsId=case-4&lang=en_US

	Introduction DJI aircraft caries telemetry system for the safety of the pilots and persons on the ground during flights. Telemetry from an on-board flight system is the primary source of real-time measurement and status information transmitted to the pilot. DJI Onboard SDK provides API to read telemetry data in real time in subscription or broadcast fashion. Example of the data include: • Sensor readings such as gyroscope and magnetometer • Fusion data such as attitude and global position • Aircraft information such as battery, gimbal, and flight status https://developer.dji.com/onboard-sdk/documentation/guides/component-guide-telemetry.html Broadcast In data broadcast mechanism, the data package arrives at a pre-configured frequency. The frequency can be modified across your application via DJI Onboard API or it can be changed via DJI Assistant 2 before the flight. Available Broadcast Data Broadcast data arives in a package containing state information for components listed below: • **Timestamp** • **Hardware Synchronization Timestamp** • **Quaternion** • **Angular Rate** • **Velocity** • **Gyroscope Reading** • **Global Position** • **Relative Position** • **GPS** • **RTK** • **Magnetometer** • **Remote Controller** • **Gimbal** • **Flight Status** • **Battery** https://developer.dji.com/onboard-sdk/documentation/guides/component-guide-telemetry.html

DJI RC Pro

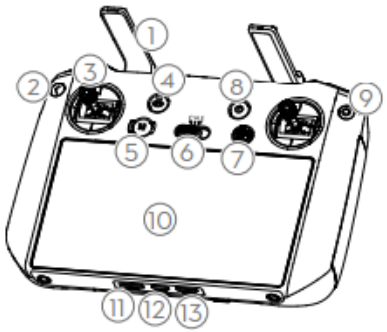

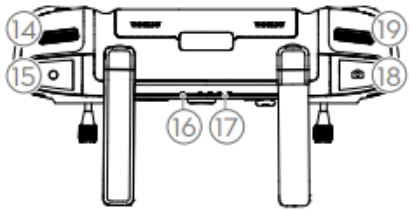

1. **Antennas**
   Relay aircraft control and video wireless signals.
2. **Back Button**
   Press once to return to the previous screen. Press twice to return to the home screen.
3. **Control Sticks**
   Use the control sticks to control the aircraft movements. Set the flight control mode in DJI

9. **Confirm Button**
   Press once to confirm a selection. The button does not have a function when using DJI Fly.
10. **Touchscreen**
    Touch the screen to operate the remote controller. Note that the touchscreen is not waterproof. Operate with caution.
11. **microSD Card Slot**
    Use to insert a microSD card.

https://dl.djicdn.com/downloads/DJI_Mavic_3/DJI_Mavic_3_User_Manual_v2.0_en.pdf

	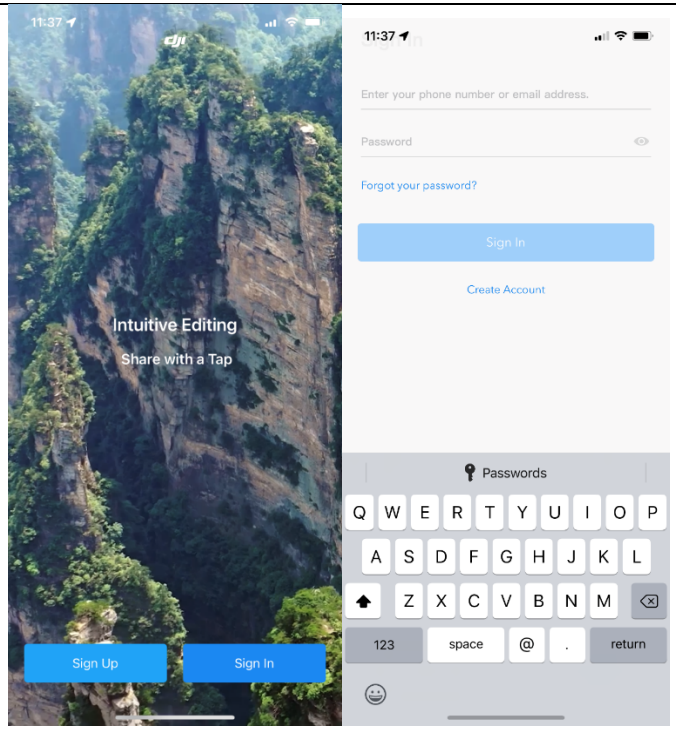 Screenshots from the DJI GO 4 application for iOS

	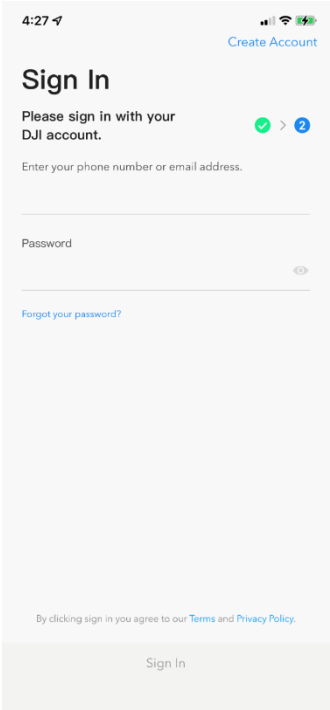 Screenshot from the DJI GO application for iOS

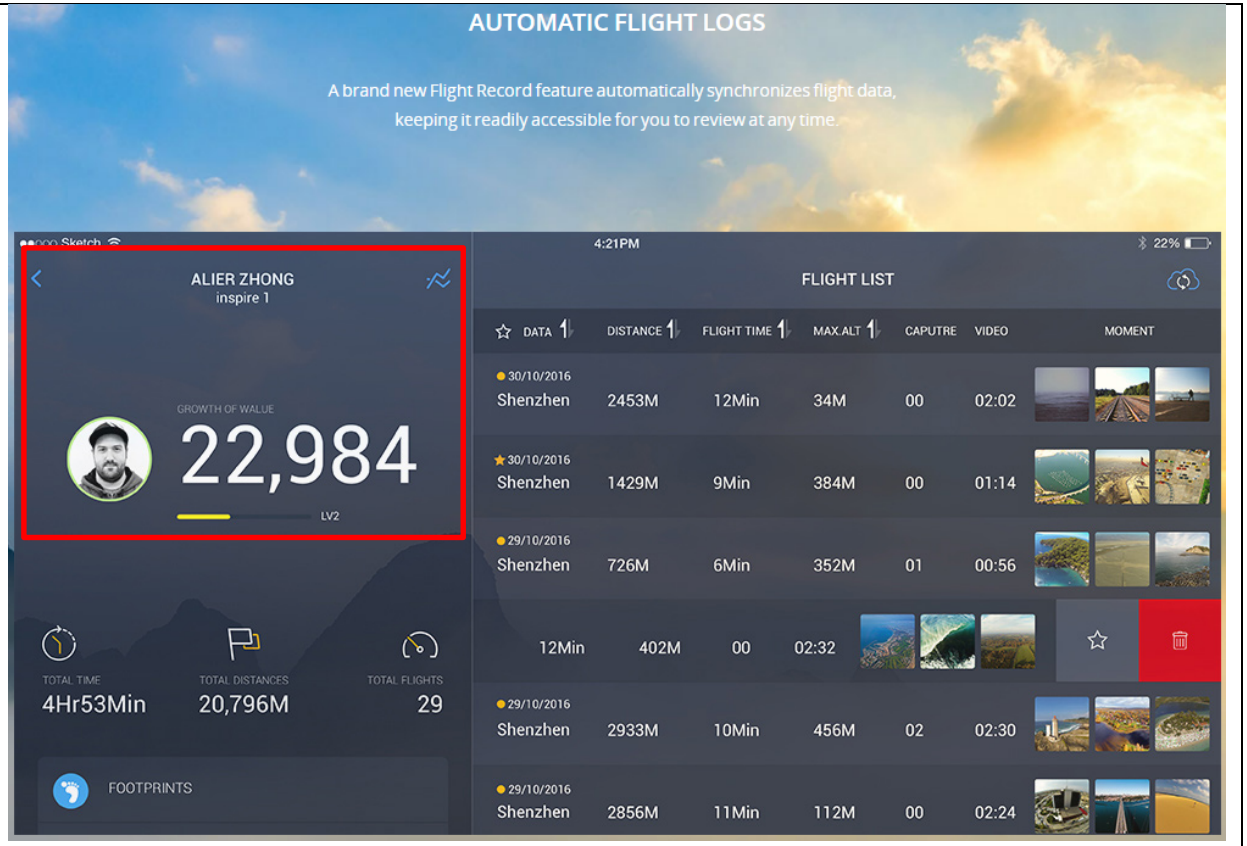

https://www.dji.com/goapp

	DJI RC-N1 Remote Controller **Remote Controller Transmission System**: When used with different aircraft hardware configurations, DJI RC-N1 Remote Controllers will automatically select the corresponding firmware version for updating and support the following transmission technologies enabled by the hardware performance of the linked aircraft models: a. DJI Mini 2/ DJI Mavic Air 2: O2 b. DJI Air 2S: O3 c. DJI Mavic 3: O3+ **Max Supported Mobile Device Size**: 180×86×10 mm (Length×Width×Height) **Operating Temperature**: 0° to 40° C (32° to 104° F) **Transmitter Power (EIRP)**: 2.4 GHz: ≤26 dBm (FCC), ≤20 dBm (CE/SRRC/MIC) 5.8 GHz: ≤26 dBm (FCC/SRRC), ≤14 dBm (CE) https://www.dji.com/mavic-3/specs By default, DJI drones do not automatically transmit most types of user data without user authorization, including media files (photos and videos) and flight logs (detailed telemetry and location information compiled during the flight). Users can choose whether to share most types of data collected by DJI products within the DJI GO App, available for both Android and iOS. For example, a user must affirmatively choose to share media files or flight logs. DJI drones are capable of collecting different types of data, together with DJI's flight control apps, such as DJI GO and DJI GO 4. These flight control apps augment the drone's physical remote controller to provide users with better control of the drone. Most of DJI's drone remote controllers do not have a video display, and so the flight control app, running on the customer's mobile device, provides a live video feed and other advanced controls when paired with the DJI remote controller. The flight control app is the only part of a DJI product that has the ability to connect to the internet. Other software developers have created flight control, photography, and mapping apps for DJI drones, and our customers have the choice to use those as alternatives to DJI's flight control apps. https://security.dji.com/news?newsId=case-4&lang=en_US

	• **Photography/Videography Data** includes photos and video recorded by the drone's main camera sensors. This data is stored on board the drone in an SD card. The user may also choose to save lower-resolution versions of the photography/videography data locally within the flight control app on the user's mobile device. The flight control app does not automatically transmit any photography/videography data to DJI servers. Instead, each time a user wants to share this data, the user must manually turn on the sharing feature. https://security.dji.com/news?newsId=case-4&lang=en_US • **Telemetry Data** refers to data recorded regarding a drone's flight, including altitude, speed, distance, location (e.g., GPS coordinates). Telemetry data also includes a log of the user's control stick operation, which can be used for diagnostic purposes. In the DJI flight control app, this telemetry data is compiled into one log per flight called the "Flight Record." This data is first generated in the drone and the remote controller, and it is constantly transmitted to the mobile device connected to the remote controller, which communicates with the drone. After receiving this telemetry data, the mobile device stores the data locally as part of the flight control app. The flight control app does not automatically transmit telemetry data to DJI servers. To synchronize this telemetry data to DJI's servers for backup purposes, the user must manually use the "Sync" button on the DJI GO interface. One purpose of this "Sync" function is to allow DJI's aftersales service personnel to analyze a user's flight history in order to determine causes of drone malfunctions or crashes. Another is to provide a backup mechanism for our users who need to maintain flight records, as well as to allow a single user account to be used with a common set of flight logs across multiple mobile devices. https://security.dji.com/news?newsId=case-4&lang=en_US • **Obstacle Avoidance Data** is recorded by the obstacle avoidance image sensors (e.g., the two "eyes" at the front of Mavic or Phantom 4). This feature helps to protect buildings, people, and animals from drone collisions. This type of imaging data is limited to low resolution video, with no audio. Like telemetry data, DJI sometimes analyzes obstacle avoidance data to determine causes of drone malfunctions or crashes. The flight control app does not automatically transmit obstacle avoidance data to DJI servers. Obstacle avoidance data may only be transmitted in response to manual triggering in the flight control app. The flight control app does not permit automatic transmission of obstacle avoidance data. https://security.dji.com/news?newsId=case-4&lang=en_US

9[d] wherein the stored sensed flight performance is only accessible with the associated pilot identification information;	The accused DJI drones, including the DJI Mavic 3 drone, use DJI applications wherein the stored sensed flight performance is only accessible with the associated pilot identification information. For example, the DJI mobile applications require DJI login credentials to access the stored sensed flight performance. As another example, at least some types of stored flight performance require user permission before transmission to a database. 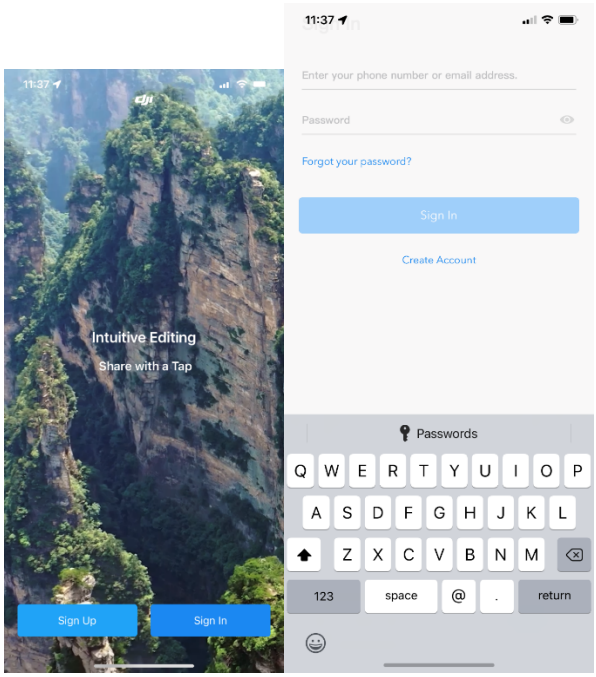 Screenshots from the DJI GO 4 application for iOS

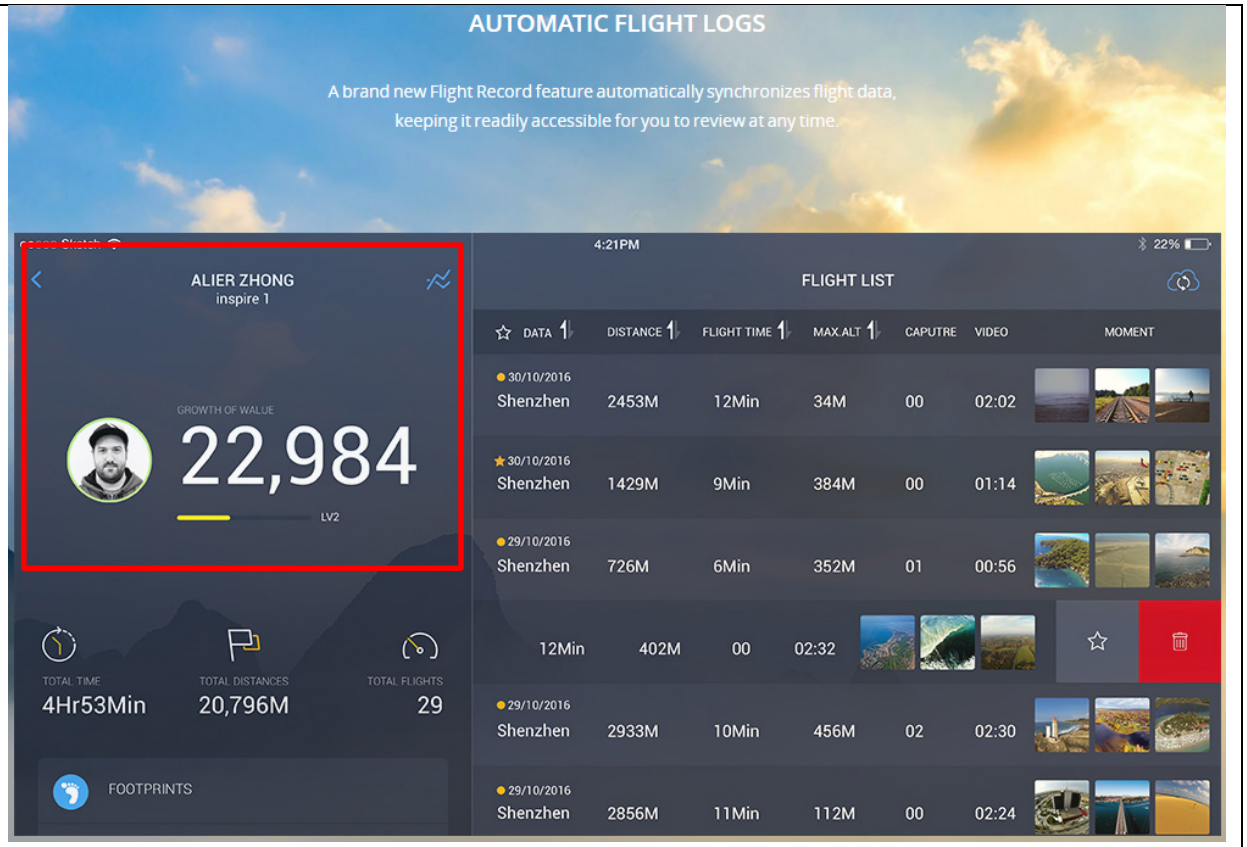

https://www.dji.com/goapp

	• **Telemetry Data** refers to data recorded regarding a drone's flight, including altitude, speed, distance, location (e.g., GPS coordinates). Telemetry data also includes a log of the user's control stick operation, which can be used for diagnostic purposes. In the DJI flight control app, this telemetry data is compiled into one log per flight called the "Flight Record." This data is first generated in the drone and the remote controller, and it is constantly transmitted to the mobile device connected to the remote controller, which communicates with the drone. After receiving this telemetry data, the mobile device stores the data locally as part of the flight control app. The flight control app does not automatically transmit telemetry data to DJI servers. To synchronize this telemetry data to DJI's servers for backup purposes, the user must manually use the "Sync" button on the DJI GO interface. One purpose of this "Sync" function is to allow DJI's aftersales service personnel to analyze a user's flight history in order to determine causes of drone malfunctions or crashes. Another is to provide a backup mechanism for our users who need to maintain flight records, as well as to allow a single user account to be used with a common set of flight logs across multiple mobile devices. https://security.dji.com/news?newsId=case-4&lang=en_US
9[e] wherein the wireless transmitter is configured to receive and transmit flight performance data from the avionics system to the transceiver, which in turn is transmitted to the database; and	The accused DJI drones, including the DJI Mavic 3 drone, comprise a wireless transmitter configured to receive and transmit flight performance data from the avionics system to the transceiver, which in turn is transmitted to the database. For example, the Mavic 3 drone is compatible with DJI remote controllers that are able to receive and transmit flight performance data to a transceiver. Introduction DJI aircraft caries telemetry system for the safety of the pilots and persons on the ground during flights. Telemetry from an on-board flight system is the primary source of real-time measurement and status information transmitted to the pilot. DJI Onboard SDK provides API to read telemetry data in real time in subscription or broadcast fashion. Example of the data include: • Sensor readings such as gyroscope and magnetometer • Fusion data such as attitude and global position • Aircraft information such as battery, gimbal, and flight status https://developer.dji.com/onboard-sdk/documentation/guides/component-guide-telemetry.html

	Broadcast In data broadcast mechanism, the data package arrives at a pre-configured frequency. The frequency can be modified across your application via DJI Onboard API or it can be changed via DJI Assistant 2 before the flight. Available Broadcast Data Broadcast data arives in a package containing state information for components listed below: • **Timestamp** • **Hardware Synchronization Timestamp** • **Quaternion** • **Angular Rate** • **Velocity** • **Gyroscope Reading** • **Global Position** • **Relative Position** • **GPS** • **RTK** • **Magnetometer** • **Remote Controller** • **Gimbal** • **Flight Status** • **Battery** https://developer.dji.com/onboard-sdk/documentation/guides/component-guide-telemetry.html

	By default, DJI drones do not automatically transmit most types of user data without user authorization, including media files (photos and videos) and flight logs (detailed telemetry and location information compiled during the flight). Users can choose whether to share most types of data collected by DJI products within the DJI GO App, available for both Android and iOS. For example, a user must affirmatively choose to share media files or flight logs. DJI drones are capable of collecting different types of data, together with DJI's flight control apps, such as DJI GO and DJI GO 4. These flight control apps augment the drone's physical remote controller to provide users with better control of the drone. Most of DJI's drone remote controllers do not have a video display, and so the flight control app, running on the customer's mobile device, provides a live video feed and other advanced controls when paired with the DJI remote controller. The flight control app is the only part of a DJI product that has the ability to connect to the internet. Other software developers have created flight control, photography, and mapping apps for DJI drones, and our customers have the choice to use those as alternatives to DJI's flight control apps. https://security.dji.com/news?newsId=case-4&lang=en_US • **Photography/Videography Data** includes photos and video recorded by the drone's main camera sensors. This data is stored on board the drone in an SD card. The user may also choose to save lower-resolution versions of the photography/videography data locally within the flight control app on the user's mobile device. The flight control app does not automatically transmit any photography/videography data to DJI servers. Instead, each time a user wants to share this data, the user must manually turn on the sharing feature. https://security.dji.com/news?newsId=case-4&lang=en_US

	• **Telemetry Data** refers to data recorded regarding a drone's flight, including altitude, speed, distance, location (e.g., GPS coordinates). Telemetry data also includes a log of the user's control stick operation, which can be used for diagnostic purposes. In the DJI flight control app, this telemetry data is compiled into one log per flight called the "Flight Record." This data is first generated in the drone and the remote controller, and it is constantly transmitted to the mobile device connected to the remote controller, which communicates with the drone. After receiving this telemetry data, the mobile device stores the data locally as part of the flight control app. The flight control app does not automatically transmit telemetry data to DJI servers. To synchronize this telemetry data to DJI's servers for backup purposes, the user must manually use the "Sync" button on the DJI GO interface. One purpose of this "Sync" function is to allow DJI's aftersales service personnel to analyze a user's flight history in order to determine causes of drone malfunctions or crashes. Another is to provide a backup mechanism for our users who need to maintain flight records, as well as to allow a single user account to be used with a common set of flight logs across multiple mobile devices. https://security.dji.com/news?newsId=case-4&lang=en_US • **Obstacle Avoidance Data** is recorded by the obstacle avoidance image sensors (e.g., the two "eyes" at the front of Mavic or Phantom 4). This feature helps to protect buildings, people, and animals from drone collisions. This type of imaging data is limited to low resolution video, with no audio. Like telemetry data, DJI sometimes analyzes obstacle avoidance data to determine causes of drone malfunctions or crashes. The flight control app does not automatically transmit obstacle avoidance data to DJI servers. Obstacle avoidance data may only be transmitted in response to manual triggering in the flight control app. The flight control app does not permit automatic transmission of obstacle avoidance data. https://security.dji.com/news?newsId=case-4&lang=en_US
9[f] wherein the pilot identification information is entered directly into the input device of the transceiver.	The Accused DJI Drones are configured for the pilot identification information to be entered directly into the input device of the transceiver. For example, the transceiver includes a touchscreen that allows the pilot to enter identification information (e.g., DJI login credentials).

	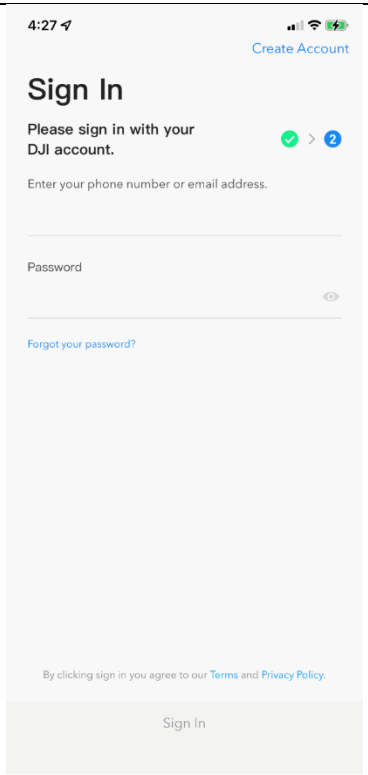 Screenshot from the DJI GO application for iOS

	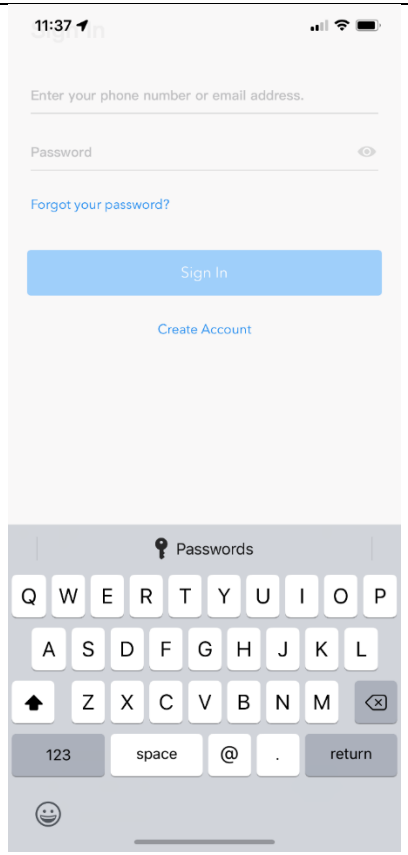 Screenshot of the DJI GO 4 application for iOS
[12] The system of claim 9, wherein the transceiver is a smartphone.	The Accused DJI Drones include RC controllers that include a smartphone as the transceiver.

	SWIPE TO FLY OR LAND /TRACK YOUR ENTIRE FLIGHT Auto take-off and land your aircraft with just a swipe of the finger on your smart device. Track your aircraft's position and heading with a glance at a map. You can also use this map to set a new home point and even activate Return to Home, making flying easy and simple. https://www.dji.com/goapp

	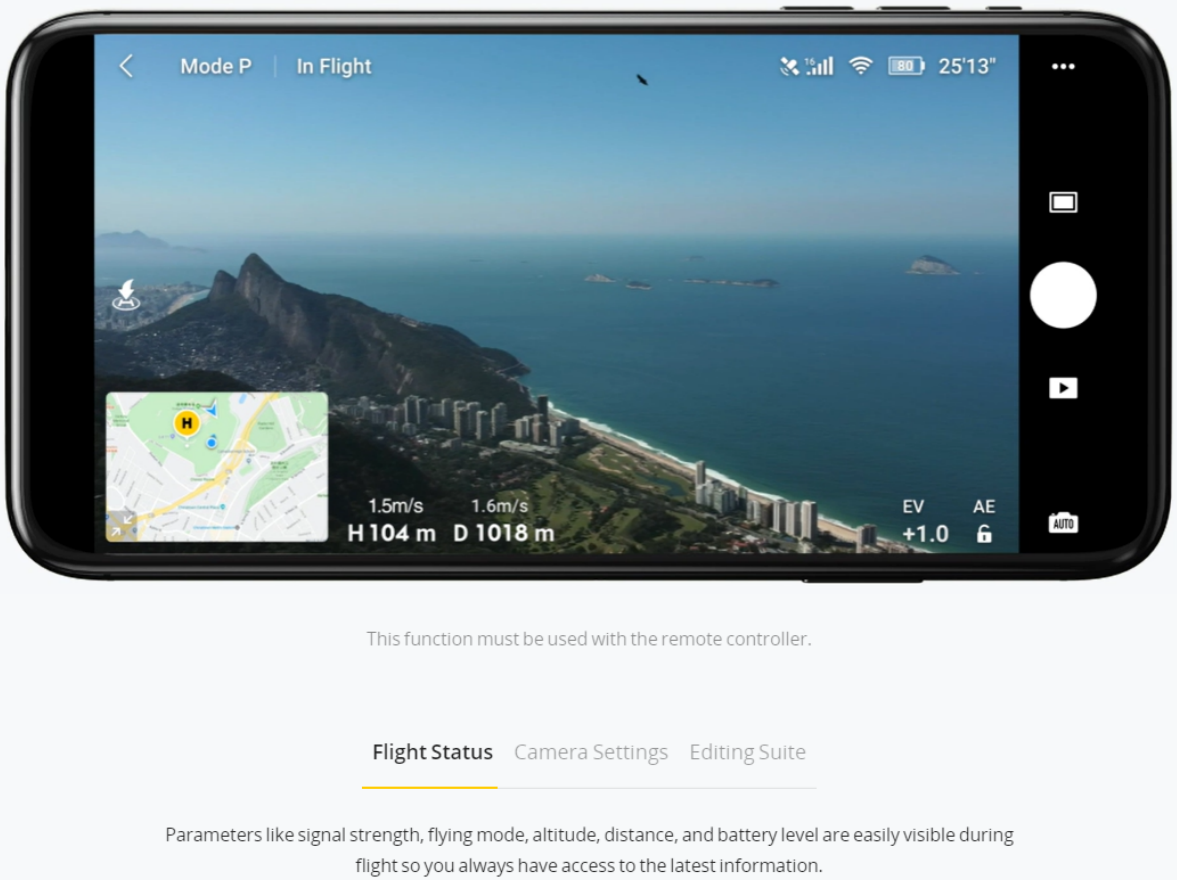 https://www.dji.com/dji-fly
[13pre] A method to monitor aircraft flight performance data, comprising:	If the preamble is limiting, the Accused DJI Drones perform the claimed method to monitor aircraft flight performance data. For example, the Accused DJI Drones includes a flight recorder that stores to internal storage and/or broadcasts flight telemetry, aircraft status, and other parameters during flight of the aircraft. The drone's flight recorder data, along with additional data cited below, are components of DJI's flight performance monitoring system, which performs the recited method.

Each of the Accused DJI Drones also include a DJI mobile application that receives flight performance data (along with any additional data relating to flight and/or flight performance) from the aircraft and monitor performance of the aircraft during flight.

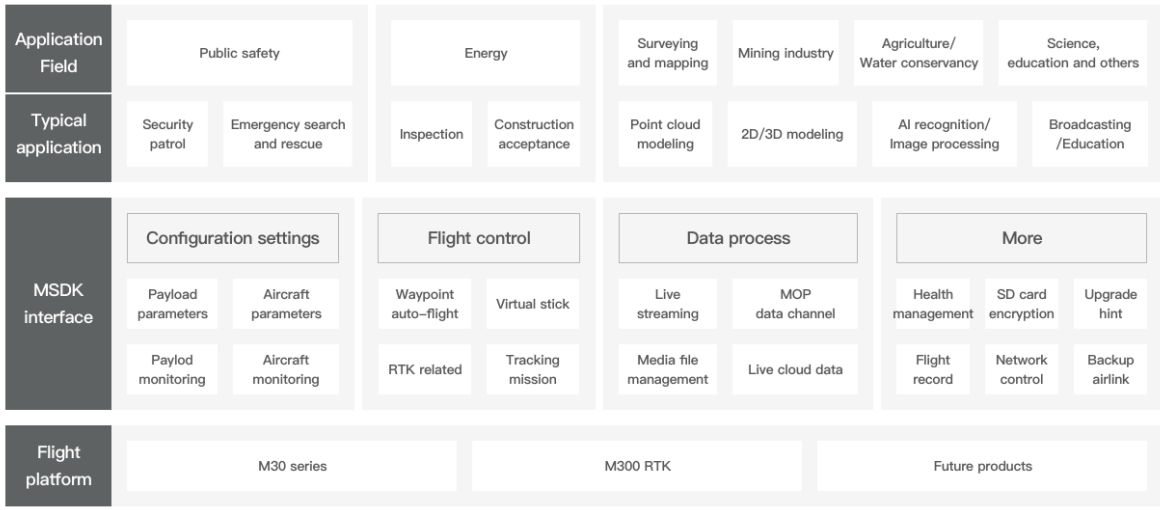

https://developer.dji.com/mobile-sdk/

Flight Recorder

Flight data including flight telemetry, aircraft status information, and other parameters are automatically saved to the internal data recorder of the aircraft. The data can be accessed using DJI Assistant 2 (Consumer Drones Series).

https://dl.djicdn.com/downloads/DJI_Mavic_3/DJI_Mavic_3_User_Manual_v1.4_en.pdf, 31

	Flight Record Sample 2022-08-25 No Rating Github Edit **Sample Introduction** The flight record module is to provide users with a way to determine responsibility and locate problems. If the user's drone is lost and the flight control log of the drone cannot be obtained, the flight records saved on the App can be analyzed. **Interface Calling Process** The two interfaces used by the flight record module are: • Get the path to store flight logs: getFlightRecordPath() • Get the path of the flight controller compressed log: getFlyCLogPath() There is no obvious calling process relationship. For detailed usage, please check the **API documentation** of Mobile SDK. https://developer.dji.com/doc/mobile-sdk-tutorial/en/tutorials/flight-record.html#sample-acquisition • **Telemetry Data** refers to data recorded regarding a drone's flight, including altitude, speed, distance, location (e.g., GPS coordinates). Telemetry data also includes a log of the user's control stick operation, which can be used for diagnostic purposes. In the DJI flight control app, this telemetry data is compiled into one log per flight called the "Flight Record." This data is first generated in the drone and the remote controller, and it is constantly transmitted to the mobile device connected to the remote controller, which communicates with the drone. After receiving this telemetry data, the mobile device stores the data locally as part of the flight control app. The flight control app does not automatically transmit telemetry data to DJI servers. To synchronize this telemetry data to DJI's servers for backup purposes, the user must manually use the "Sync" button on the DJI GO interface. One purpose of this "Sync" function is to allow DJI's aftersales service personnel to analyze a user's flight history in order to determine causes of drone malfunctions or crashes. Another is to provide a backup mechanism for our users who need to maintain flight records, as well as to allow a single user account to be used with a common set of flight logs across multiple mobile devices. https://security.dji.com/news?newsId=case-4&lang=en_US

	Sensors The Flight controller manages several sub components of the aircraft including sensors and landing gear. https://developer.dji.com/onboard-sdk/documentation/guides/component-guide-flight-control.html Introduction DJI aircraft caries telemetry system for the safety of the pilots and persons on the ground during flights. Telemetry from an on-board flight system is the primary source of real-time measurement and status information transmitted to the pilot. DJI Onboard SDK provides API to read telemetry data in real time in subscription or broadcast fashion. Example of the data include: • Sensor readings such as gyroscope and magnetometer • Fusion data such as attitude and global position • Aircraft information such as battery, gimbal, and flight status https://developer.dji.com/onboard-sdk/documentation/guides/component-guide-telemetry.html

	Broadcast In data broadcast mechanism, the data package arrives at a pre-configured frequency. The frequency can be modified across your application via DJI Onboard API or it can be changed via DJI Assistant 2 before the flight. Available Broadcast Data Broadcast data arives in a package containing state information for components listed below: • Timestamp • Hardware Synchronization Timestamp • Quaternion • Angular Rate • Velocity • Gyroscope Reading • Global Position • Relative Position • GPS • RTK • Magnetometer • Remote Controller • Gimbal • Flight Status • Battery https://developer.dji.com/onboard-sdk/documentation/guides/component-guide-telemetry.html

	Aircraft Status Indicators DJI Mavic 3 has front LEDs and aircraft status indicators. 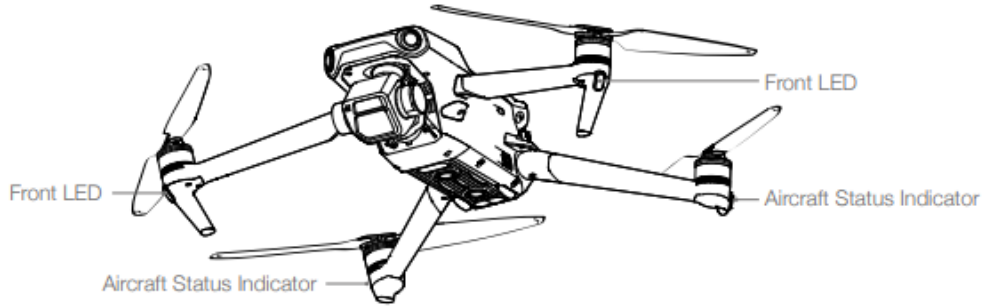 https://dl.djicdn.com/downloads/DJI_Mavic_3/DJI_Mavic_3_User_Manual_v2.0_en.pdf **Aircraft** DJI Mavic 3 contains a flight controller, video downlink system, vision systems, infrared sensing system, propulsion system, and an Intelligent Flight Battery. https://dl.djicdn.com/downloads/DJI_Mavic_3/DJI_Mavic_3_User_Manual_v2.0_en.pdf

	Aircraft Status Indicators DJI Mavic 3 has front LEDs and aircraft status indicators. 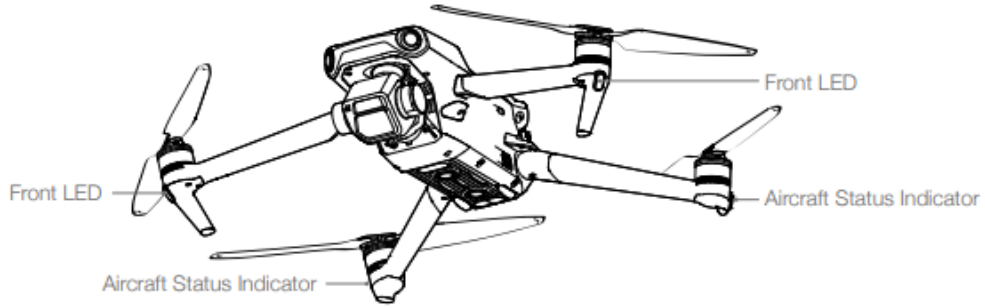 https://dl.djicdn.com/downloads/DJI_Mavic_3/DJI_Mavic_3_User_Manual_v2.0_en.pdf

	 https://www.dji.com/mavic-3?site=brandsite&from=nav
[13a] providing an avionics system comprising: a sensor for sensing flight performance data; and a memory card interface;	The Accused DJI Drones provide an avionics system that includes a sensor for sensing flight performance data and a memory card interface. For example, each of the Accused DJI Drones provide an avionics system comprising a flight controller and/or data processing system that includes a memory card interface (e.g., an interface to the "microSD Card Slot").

	Aircraft DJI Mavic 3 contains a flight controller, video downlink system, vision systems, infrared sensing system, propulsion system, and an Intelligent Flight Battery. https://dl.djicdn.com/downloads/DJI_Mavic_3/DJI_Mavic_3_User_Manual_v1.4_en.pdf, 13 **Aircraft** DJI Mavic 3 contains a flight controller, video downlink system, vision systems, infrared sensing system, propulsion system, and an Intelligent Flight Battery. https://dl.djicdn.com/downloads/DJI_Mavic_3/DJI_Mavic_3_User_Manual_v1.4_en.pdf, 14 **Flight Modes** DJI Mavic 3 has three flight modes, plus a fourth flight mode that the aircraft switches to in certain scenarios. Flight modes can be switched via the Flight Mode switch on the remote controller. Normal Mode: The aircraft utilizes GNSS and the Forward, Backward, Lateral, Upward, and Downward Vision Systems and Infrared Sensing System to locate and stabilize itself. When the GNSS signal is strong, the aircraft uses GNSS to locate and stabilize itself. When the GNSS is weak but the lighting and other environment conditions are sufficient, the aircraft uses the vision systems to locate and stabilize itself. When the Forward, Backward, Lateral, Upward, and Downward Vision Systems are enabled and lighting and other environment conditions are sufficient, the maximum tilt angle is 30° and the maximum flight speed is 15 m/s.

Sport Mode: In Sport Mode, the aircraft uses GNSS for positioning and the aircraft responses are optimized for agility and speed making it more responsive to control stick movements. Note that obstacle sensing is disabled and the maximum flight speed is 21 m/s (19 m/s when flying in the EU).

https://dl.djicdn.com/downloads/DJI_Mavic_3/DJI_Mavic_3_User_Manual_v1.4_en.pdf, 14

Vision Systems and Infrared Sensing System

DJI Mavic 3 is equipped with both an Infrared Sensing System and Forward, Backward, Lateral, Upward, and Downward Vision Systems.

The Upward and Downward Vision Systems consist of two cameras each, and the Forward, Backward, and Lateral Vision Systems consist of four cameras in total.

The Infrared Sensing System consists of two 3D infrared modules. The Downward Vision System and Infrared Sensing System helps the aircraft maintain its current position, hover in place more precisely, and to fly indoors or in other environments where GNSS is unavailable.

In addition, the Auxiliary Bottom Light located on the underside of the aircraft improves visibility for the Downward Vision System in weak light conditions.

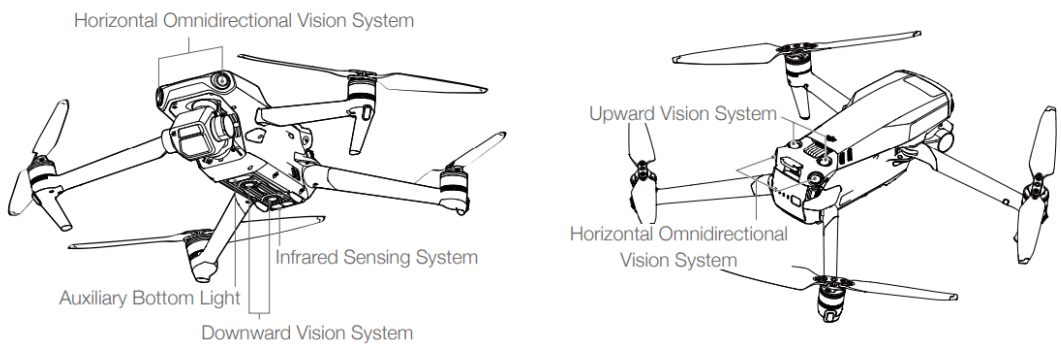

https://dl.djicdn.com/downloads/DJI_Mavic_3/DJI_Mavic_3_User_Manual_v1.4_en.pdf, 21

	Using the Vision Systems When GNSS is unavailable, the Downward Vision System is enabled if the surface has a clear texture and sufficient light. The Forward, Backward, Lateral, and Upward Vision Systems will activate automatically when the aircraft is powered on if the aircraft is in Normal or Cine mode and Obstacle Avoidance is set to Bypass or Brake in DJI Fly. The aircraft can actively brake when detecting obstacles when using the Forward, Backward, Lateral, and Upward Vision Systems. The Forward, Backward, Lateral, and Upward Vision Systems work best with adequate lighting and clearly marked or textured obstacles. Due to inertia, users must make sure to brake the aircraft within a reasonable distance. https://dl.djicdn.com/downloads/DJI_Mavic_3/DJI_Mavic_3_User_Manual_v1.4_en.pdf, 22 The N3 is a third generation NAZA™ flight control system designed for serious multi-rotor enthusiasts. It is a reliable and robust system with double IMUs and can be expanded with external high-performance sensors. It uses advanced control algorithms and sensor fusion algorithms to maintain complete stability and integrity of the aerial system. The N3 is fully compatible with the DJI™ Onboard and Mobile SDKs and other DJI products, allowing developers to optimize the system for specific applications. When used with DJI Lightbridge 2, it provides direct access to DJI GO features including Intelligent Flight Modes. With all essential components integrated into the N3 flight controller (including double IMUs, barometer and data recorder), the device is powerful and highly compact to work together with the GNSS-Compass module (including GPS and GLONASS), PMU module and LED module. https://dl.djicdn.com/downloads/N3/20170825/N3_User_Manual_En_v1.4.pdf, 4 System Components How the System Works The flight controller is the core module of the N3 fight control system, which utilizes the IMU, barometer, GNSS and compass to realize accurate attitude control and high-precision positioning for the aircraft. Multiple interfaces for SDK development and DJI devices, such as the Zenmuse Z15 gimbals, are also provided. The DJI Assistant 2 software allows you to configure parameters for installation, flight control, and other accessed devices. A simulator is also available for simulated flight practice. When used with the DJI Lightbridge 2, the N3 has direct access to features in the DJI GO app such as Intelligent Flight Modes.

	https://dl.djicdn.com/downloads/N3/20170825/N3_User_Manual_En_v1.4.pdf, 4 **N3 and N3 Pro Parts** **Flight Controller** Feature Highlights 1. Independent CAN1 and CAN2 ports and API Serial port for the Onboard SDK. The CAN1 port is used to connect the GNSS-Compass and DJI devices while the CAN2 port is used to connect SDK devices. 2. Built-in inertial sensors for the measurement of aircraft attitude and built-in pressure sensor for the detection of aircraft altitude. 3. Support for multiple receiver types. If used with the DJI Lightbridge 2, the N3 has direct access to features in the DJI GO app such as Intelligent Flight Modes. 4. M1 to M8 are used to connect the ESCs of the aircraft and iESC for DJI Intelligent ESC communication. 5. 4 independent and configurable output ports and 4 I/O ports. These ports can be customized and connect other DJI devices (e.g. DJI Zenmuse Z15 gimbals, DJI Intelligent Landing Gear) or SDK devices. https://dl.djicdn.com/downloads/N3/20170825/N3_User_Manual_En_v1.4.pdf, 5 Flight Controller 2018-05-15 Introduction The flight controller is an onboard computer that combines control information from the pilot with sensor information to adjust the thrust at each propellor and fly the aircraft as desired. The flight controller is responsible for: • Flight control including motor control, taking off and landing, manual flight modes • Aircraft state information such as attitude, position, speed • Sensor sub components such as compasses, IMUs, and positioning systems. • Aircraft sub components such as the landing gear • Flight limitation systems such as GEO Zones and the GEO System • Aircraft flight simulation for testing and debugging A general description of fundamental flight control concepts can be found here.

	https://developer.dji.com/mobile-sdk/documentation/introduction/component-guide-flightController.html Flight Control Aircraft flight can be controlled in several ways: • **Manually**: Remote controller control sticks can be manipulated by the user • **Missions**: Simple high level flight automation • **Virtual Sticks**: Stick commands can be sent using DJI Mobile SDK APIs that simulate manual flight. • **Gestures**: Some aircraft (e.g. Spark) will perform basic flight maneuvers based on a gesture from the user. Flight Orientation The remote controller control sticks can be used to move the aircraft forward, backwards, left and right. However, if the direction of the aircraft isn't obvious, it can be difficult to control the aircraft predictably from pilot's perspective on the ground. Several flight orientation modes are available to make flying easier: • **Course Lock**: The aircraft moves relative to a locked course heading. • **Home Lock**: The aircraft moves relative radially to the Home Point. • **Aircraft Heading**: The aircraft moves relative to the front of the aircraft. More details are described in Flight Control Concepts. https://developer.dji.com/mobile-sdk/documentation/introduction/component-guide-flightController.html. Sensors The Flight controller manages several sub components of the aircraft including sensors and landing gear. https://developer.dji.com/mobile-sdk/documentation/introduction/component-guide-flightController.html

Vision System and Intelligent Flight Assistant

Cameras can be used to detect obstacles and accurately determine relative position and velocity. These cameras are typically mounted on the product facing downward for positioning and forward for obstacle detection. They are separate from the main camera used to capture photos and videos.

https://developer.dji.com/mobile-sdk/documentation/introduction/component-guide-flightController.html

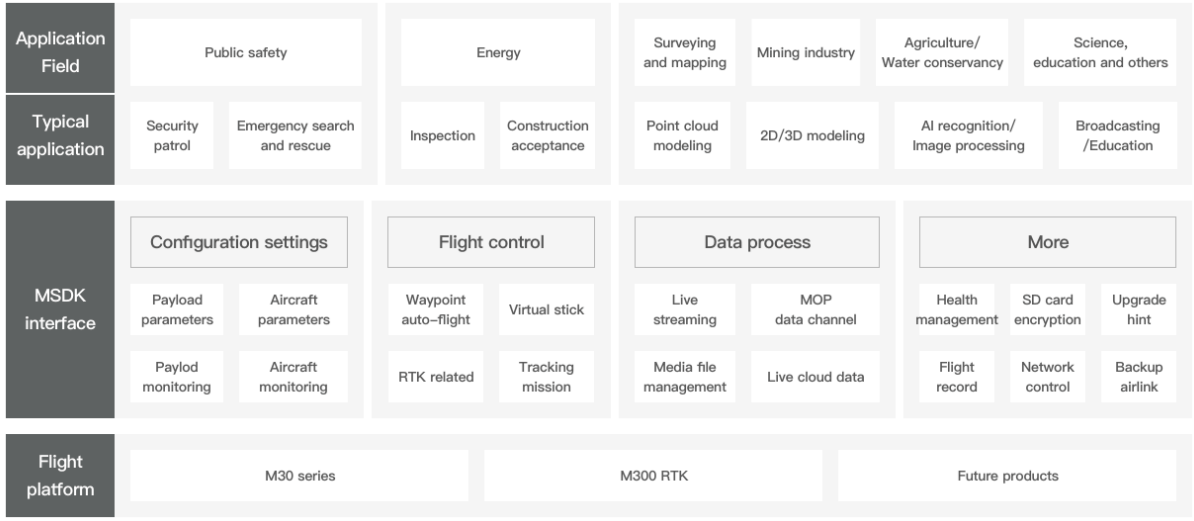

https://developer.dji.com/mobile-sdk/

The memory card interface of the Accused DJI Drones' avionics system is shown as element 17 of the diagram below:

Aircraft

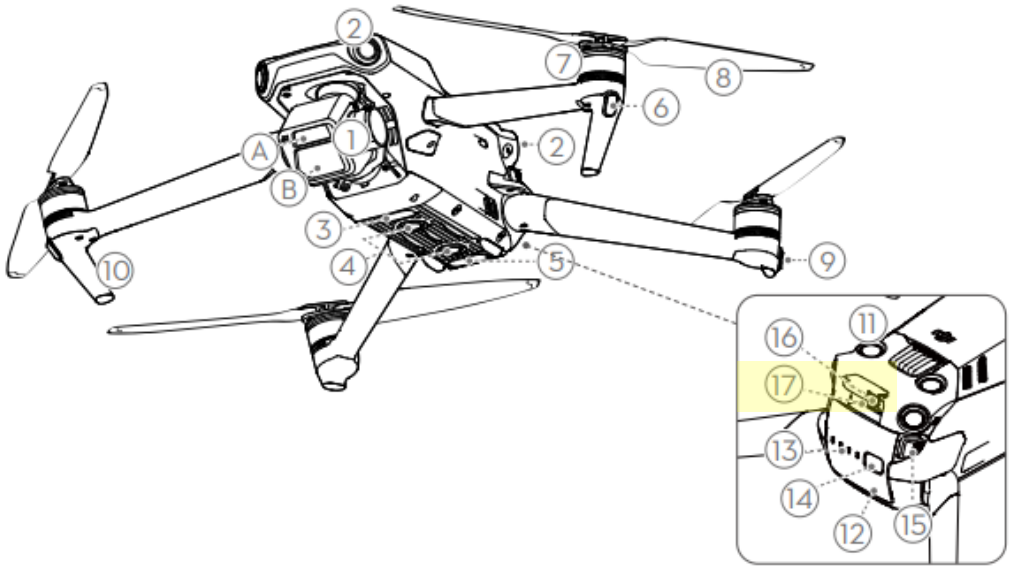

1. Gimbal and Camera
   A. Tele Camera
   B. Hasselblad L2D-20c Camera
2. Horizontal Omnidirectional Vision System
3. Auxiliary Bottom Light
4. Downward Vision System
5. Infrared Sensing System
6. Front LEDs
7. Motors
8. Propellers
9. Aircraft Status Indicators
10. Landing Gears (Built-in antennas)
11. Upward Vision System
12. Intelligent Flight Battery
13. Battery Level LEDs
14. Power Button
15. Battery Buckles
16. USB-C Port
17. microSD Card Slot

https://dl.djicdn.com/downloads/DJI_Mavic_3/DJI_Mavic_3_User_Manual_v1.0_en.pdf

	The aircraft will generate a timelapse video automatically, which is viewable in playback. In the camera settings, users can select to save the footage in JPEG or RAW format and to store the footage in the built-in storage or the microSD card. https://dl.djicdn.com/downloads/DJI_Mavic_3/DJI_Mavic_3_User_Manual_v1.4_en.pdf, 27 **Recommended microSD Cards**: Lexar 1066x 64GB V30 A2 microSDXC; Lexar 1066x 128GB V30 A2 microSDXC; Lexar 1066x 256GB V30 A2 microSDXC; Lexar 1066x 512GB V30 A2 microSDXC; SanDisk High Endurance 64GB V30 microSDXC; SanDisk High Endurance 128GB V30 microSDXC; SanDisk High Endurance 256GB V30 microSDXC; Kingston Canvas Go! Plus 64GB V30 A2 microSDXC; Kingston Canvas Go! Plus 128GB V30 A2 microSDXC; Kingston Canvas Go! Plus 256GB V30 A2 microSDXC; Kingston Canvas Go! Plus 512GB V30 A2 microSDXC; Samsung EVO Plus 512GB V30 A2 microSDXC; Samsung PRO Plus 256GB V30 A2 microSDXC; Samsung PRO Plus 512GB V30 A2 microSDXC **SSD Specs**: Mavic 3: 8 GB (available space is approx. 7.2 GB); Mavic 3 Cine: 1 TB (available space is approx. 934.8 GB) https://www.dji.com/mavic-3/specs

	APAS 5.0 Mavic 3 makes flight more fun than ever with recording that is no longer interrupted by obstacles along the way. When flying, Mavic 3 continually senses objects in all directions and bypasses them quickly and smoothly. https://www.dji.com/mavic-3?site=brandsite&from=nav **Omnidirectional Obstacle Sensing** Mavic 3 helps you to enjoy collision-free flight so you can focus on getting the best shots possible. Multiple wide-angle vision sensors work seamlessly with a high-performance vision computing engine to sense obstacles in all directions precisely and plan a safe flight route that avoids them. [4] https://www.dji.com/mavic-3?site=brandsite&from=nav

Sensing

Sensing System	Omnidirectional binocular vision system, supplemented with an infrared sensor at the bottom of the aircraft
Forward	Measurement Range: 0.5-20 m Detection Range: 0.5-200 m Effective Sensing Speed: Flight Speed ≤ 15m/s FOV: Horizontal 90°, Vertical 103°
Backward	Measurement Range: 0.5-16 m Effective Sensing Speed: Flight Speed ≤ 12m/s FOV: Horizontal 90°, Vertical 103°
Lateral	Measurement Range: 0.5-25 m Effective Sensing Speed: Flight Speed ≤ 15m/s FOV: Horizontal 90°, Vertical 85°
Upward	Measurement Range: 0.2-10 m Effective Sensing Speed: Flight Speed ≤ 6m/s FOV: Front and Back 100°, Left and Right 90°
Downward	Measurement Range: 0.3-18 m Effective Sensing Speed: Flight Speed ≤ 6m/s FOV: Front and Back 130°, Left and Right 160°
Operating Environment	Forward, Backward, Left, Right, and Upward: Surface with a clear pattern and adequate lighting (lux>15) Downward: Surface with a clear pattern and adequate lighting (lux >15). Diffuse reflective surface with diffuse reflectivity>20% (e.g. wall, tree, person)

https://www.dji.com/mavic-3/specs

Introduction

DJI Mavic 3 features both an Infrared Sensing System and Forward, Backward, Upward, Lateral, and Downward Vision Systems, allowing for hovering and flying indoors as well as outdoors and for automatic Return to Home while avoiding obstacles in all directions. The aircraft has a maximum flight speed of 47 mph (75.6 kph) and a maximum flight time of 46 minutes.

https://dl.djicdn.com/downloads/DJI_Mavic_3/DJI_Mavic_3_User_Manual_v2.0_en.pdf

	Sensors The Flight controller manages several sub components of the aircraft including sensors and landing gear. https://developer.dji.com/onboard-sdk/documentation/guides/component-guide-flight-control.html Introduction DJI aircraft caries telemetry system for the safety of the pilots and persons on the ground during flights. Telemetry from an on-board flight system is the primary source of real-time measurement and status information transmitted to the pilot. DJI Onboard SDK provides API to read telemetry data in real time in subscription or broadcast fashion. Example of the data include: • Sensor readings such as gyroscope and magnetometer • Fusion data such as attitude and global position • Aircraft information such as battery, gimbal, and flight status https://developer.dji.com/onboard-sdk/documentation/guides/component-guide-telemetry.html **GNSS** — GPS + Galileo + BeiDou **Hovering Accuracy Range** — Vertical: ±0.1 m (with Vision Positioning); ±0.5 m (with GNSS Positioning) Horizontal: ±0.3 m (with Vision Positioning); ±0.5 m (with High-Precision Positioning System) https://www.dji.com/mavic-3/specs
[13b] sensing flight performance data with the sensor;	The Accused DJI Drones perform sensing of flight performance of the drone during flight with the sensors discussed above in Element 13[a].

	For example, the Accused DJI Drones, such as the DJI Mavic 3 drone, include a variety of sensors to sense flight performance during flight, including but not limited to GNSS sensor, infrared sensor, cameras (e.g., an omnidirectional binocular vision system), gyroscope, accelerometer, magnetometer, which are used to sense flight performance of the drone during flight, among others. **APAS 5.0** Mavic 3 makes flight more fun than ever with recording that is no longer interrupted by obstacles along the way. When flying, Mavic 3 continually senses objects in all directions and bypasses them quickly and smoothly. https://www.dji.com/mavic-3?site=brandsite&from=nav **Omnidirectional Obstacle Sensing** Mavic 3 helps you to enjoy collision-free flight so you can focus on getting the best shots possible. Multiple wide-angle vision sensors work seamlessly with a high-performance vision computing engine to sense obstacles in all directions precisely and plan a safe flight route that avoids them. [4] https://www.dji.com/mavic-3?site=brandsite&from=nav

Sensing

Sensing System	Omnidirectional binocular vision system, supplemented with an infrared sensor at the bottom of the aircraft
Forward	Measurement Range: 0.5-20 m Detection Range: 0.5-200 m Effective Sensing Speed: Flight Speed ≤ 15m/s FOV: Horizontal 90°, Vertical 103°
Backward	Measurement Range: 0.5-16 m Effective Sensing Speed: Flight Speed ≤ 12m/s FOV: Horizontal 90°, Vertical 103°
Lateral	Measurement Range: 0.5-25 m Effective Sensing Speed: Flight Speed ≤ 15m/s FOV: Horizontal 90°, Vertical 85°
Upward	Measurement Range: 0.2-10 m Effective Sensing Speed: Flight Speed ≤ 6m/s FOV: Front and Back 100°, Left and Right 90°
Downward	Measurement Range: 0.3-18 m Effective Sensing Speed: Flight Speed ≤ 6m/s FOV: Front and Back 130°, Left and Right 160°
Operating Environment	Forward, Backward, Left, Right, and Upward: Surface with a clear pattern and adequate lighting (lux>15) Downward: Surface with a clear pattern and adequate lighting (lux >15). Diffuse reflective surface with diffuse reflectivity>20% (e.g. wall, tree, person)

https://www.dji.com/mavic-3/specs

Introduction

DJI Mavic 3 features both an Infrared Sensing System and Forward, Backward, Upward, Lateral, and Downward Vision Systems, allowing for hovering and flying indoors as well as outdoors and for automatic Return to Home while avoiding obstacles in all directions. The aircraft has a maximum flight speed of 47 mph (75.6 kph) and a maximum flight time of 46 minutes.

https://dl.djicdn.com/downloads/DJI_Mavic_3/DJI_Mavic_3_User_Manual_v2.0_en.pdf

	Sensors The Flight controller manages several sub components of the aircraft including sensors and landing gear. https://developer.dji.com/onboard-sdk/documentation/guides/component-guide-flight-control.html Sensors DJI aircraft have a large number of sensors including accelerometers, gyroscopes, compasses, barometers, ultrasonic sensors, cameras and satellite positioning systems. These sensors are used to determine the current and predict the future state of the aircraft and the environment around it. https://developer.dji.com/mobile-sdk/documentation/introduction/product_introduction.html#remote-controller Introduction DJI aircraft caries telemetry system for the safety of the pilots and persons on the ground during flights. Telemetry from an on-board flight system is the primary source of real-time measurement and status information transmitted to the pilot. DJI Onboard SDK provides API to read telemetry data in real time in subscription or broadcast fashion. Example of the data include: • Sensor readings such as gyroscope and magnetometer • Fusion data such as attitude and global position • Aircraft information such as battery, gimbal, and flight status https://developer.dji.com/onboard-sdk/documentation/guides/component-guide-telemetry.html The accused DJI drones, including the Mavic 3 drone, use GPS for its "GNSS," Global Navigation Satellite Systems:

GNSS	GPS + Galileo + BeiDou
Hovering Accuracy Range	Vertical: ±0.1 m (with Vision Positioning); ±0.5 m (with GNSS Positioning) Horizontal: ±0.3 m (with Vision Positioning); ±0.5 m (with High-Precision Positioning System)

https://www.dji.com/mavic-3/specs

Aircraft

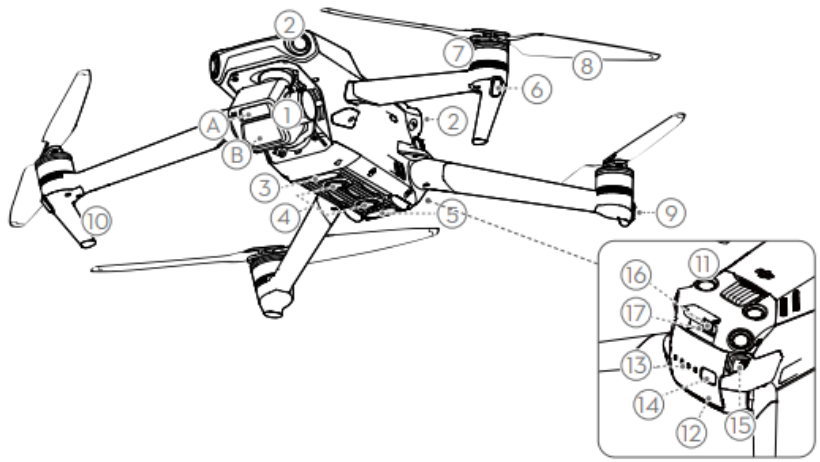

	1. Gimbal and Camera A. Tele Camera B. Hasselblad L2D-20c Camera 2. Horizontal Omnidirectional Vision System 3. Auxiliary Bottom Light 4. Downward Vision System 5. Infrared Sensing System 6. Front LEDs 7. Motors 8. Propellers 9. Aircraft Status Indicators 10. Landing Gears (Built-in antennas) 11. Upward Vision System 12. Intelligent Flight Battery 13. Battery Level LEDs 14. Power Button 15. Battery Buckles 16. USB-C Port 17. microSD Card Slot https://dl.djicdn.com/downloads/DJI_Mavic_3/DJI_Mavic_3_User_Manual_v2.0_en.pdf
[13c] providing a wireless transmitter comprising: memory; and a non-volatile memory card configured for coupling to the memory card interface of the avionics system;	The Accused DJI Drones provide a wireless transmitter having memory and a non-volatile memory card configured for coupling to the memory card interface of the avionics system. For example, the Accused DJI drones include wireless transmitters having memory (e.g., WiFi, OcuSync, Lightbridge, and/or Auxiliary transmitters) to establish one or more wireless links between the aircraft, remote controllers, handheld cameras, and mobile devices. These wireless transmitters also include a non-volatile memory card (e.g., microSD card) coupled to the memory card interface of the flight controller.

	AirLink 2017-06-27 Introduction AirLink describes the wireless link between aircraft, remote controllers, handheld cameras and mobile devices. There are four types of wireless links used in DJI products: • WiFi • OcuSync • Lightbridge • Auxiliary Wireless communication links provide great flexibility, but also have limitations. The link will degrade as obstacles come between the devices communicating wirelessly, as the separation between devices increases, and as interference with other communication links increases. A table detailing the type of wireless link for all aircraft products can be found in the Product Introduction. Osmo is not included in this table and uses the WiFi wireless link between itself and mobile device. https://developer.dji.com/mobile-sdk/documentation/introduction/component-guide-airlink.html

	• **Telemetry Data** refers to data recorded regarding a drone's flight, including altitude, speed, distance, location (e.g., GPS coordinates). Telemetry data also includes a log of the user's control stick operation, which can be used for diagnostic purposes. In the DJI flight control app, this telemetry data is compiled into one log per flight called the "Flight Record." This data is first generated in the drone and the remote controller, and it is constantly transmitted to the mobile device connected to the remote controller, which communicates with the drone. After receiving this telemetry data, the mobile device stores the data locally as part of the flight control app. The flight control app does not automatically transmit telemetry data to DJI servers. To synchronize this telemetry data to DJI's servers for backup purposes, the user must manually use the "Sync" button on the DJI GO interface. One purpose of this "Sync" function is to allow DJI's aftersales service personnel to analyze a user's flight history in order to determine causes of drone malfunctions or crashes. Another is to provide a backup mechanism for our users who need to maintain flight records, as well as to allow a single user account to be used with a common set of flight logs across multiple mobile devices. https://security.dji.com/news?newsId=case-4&lang=en_US Sensors The Flight controller manages several sub components of the aircraft including sensors and landing gear. https://developer.dji.com/onboard-sdk/documentation/guides/component-guide-flight-control.html Introduction DJI aircraft caries telemetry system for the safety of the pilots and persons on the ground during flights. Telemetry from an on-board flight system is the primary source of real-time measurement and status information transmitted to the pilot. DJI Onboard SDK provides API to read telemetry data in real time in subscription or broadcast fashion. Example of the data include: • Sensor readings such as gyroscope and magnetometer • Fusion data such as attitude and global position • Aircraft information such as battery, gimbal, and flight status

	https://developer.dji.com/onboard-sdk/documentation/guides/component-guide-telemetry.html Broadcast In data broadcast mechanism, the data package arrives at a pre-configured frequency. The frequency can be modified across your application via DJI Onboard API or it can be changed via DJI Assistant 2 before the flight. Available Broadcast Data Broadcast data arives in a package containing state information for components listed below: • Timestamp • Hardware Synchronization Timestamp • Quaternion • Angular Rate • Velocity • Gyroscope Reading • Global Position • Relative Position • GPS • RTK • Magnetometer • Remote Controller • Gimbal • Flight Status • Battery https://developer.dji.com/onboard-sdk/documentation/guides/component-guide-telemetry.html Flight Recorder Flight data including flight telemetry, aircraft status information, and other parameters are automatically saved to the internal data recorder of the aircraft. The data can be accessed using DJI Assistant 2 (Consumer Drones Series).

https://dl.djicdn.com/downloads/DJI_Mavic_3/20220531/DJI_Mavic_3_User_Manual_v1.6_en.pdf

Video Transmission

Video Transmission System	O3+
Live View Quality	Remote Controller: 1080p@30fps/1080p@60fps
Operation Frequency	2.400-2.4835 GHz 5.725-5.850 GHz
Max Transmission Distance (unobstructed, free of interference and aligned with controller)	2.400-2.4835 GHz; 5.725-5.850 GHz FCC: 15 km CE: 8 km SRRC: 8 km MIC: 8 km
Signal Transmission Ranges (FCC)	Strong Interference (urban landscape, limited line of sight, many competing signals): Approx. 1.5-3 km Medium Interference (suburban landscape, open line of sight, some competing signals): Approx. 3-9 km Low Interference (open landscape abundant line of sight, few competing signals): Approx. 9-15 km Data is tested under different standards in open areas free of interference. It only refers to the maximum, one-way flight distance without considering Return to Home. Please pay attention to RTH prompts in the DJI Fly app during actual flight.
Max Download Bitrate	O3+: 5.5MB/s (with RC-N1 remote controller) 15MB/s (with DJI RC Pro remote controller) Wi-Fi 6: 80MB/s
Latency (depending on environmental conditions and mobile device)	130 ms (with RC-N1 remote controller) 120 ms (with DJI RC Pro remote controller)
Antennas	4 antennas, 2T4R
Transmitter Power (EIRP)	2.4 GHz: ≤33 dBm (FCC); ≤20 dBm (CE/SRRC/MIC) 5.8 GHz: ≤33 dBm (FCC), ≤30 dBm(SRRC), ≤14 dBm(CE)

https://www.dji.com/mavic-3/specs

	Storage **Recommended microSD Cards** Standard bitrate video recommended microSD Cards: H.265 : 5.1K : 5120x2700@24/25/30/48/50fps DCI 4K : 4096x2160@24/25/30/48/50/60/120fps 4K: 3840x2160@24/25/30/48/50/60/120fps FHD : 1920x1080@24/25/30/48/50/60/120/200fps H.264 : DCI 4K : 4096x2160@24/25/30/48/50/60fps 4K : 3840x2160@24/25/30/48/50/60fps FHD: 1920x1080@24/25/30/48/50/60/120/200fps SanDisk Extreme Pro 64G v30 A2 microSDXC SanDisk Extreme Pro 128G v30 A2 microSDXC https://www.dji.com/mavic-3/specs **State** The flight controller provides detailed state information at up to 10 Hz including: • Aircraft position, velocity and altitude • Remaining Battery and Flight time information • Home location • Sensor information (compass, IMU, Satellite positioning) • Return home status • Whether motors are on and aircraft is flying or not • Flight limitation and GEO system information

	https://developer.dji.com/mobile-sdk/documentation/introduction/component-guide-flightController.html The DJI RC Pro, for example, comprises a microSD Card as labeled 11 below: DJI RC Pro 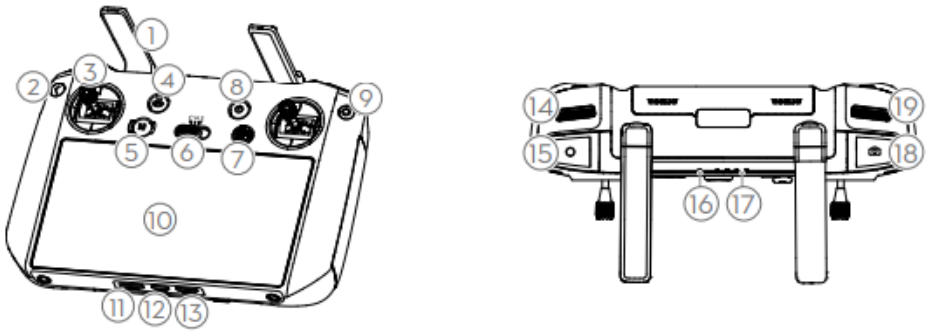 1. Antennas Relay aircraft control and video wireless signals. 2. Back Button Press once to return to the previous screen. Press twice to return to the home screen. 3. Control Sticks Use the control sticks to control the aircraft movements. Set the flight control mode in DJI 9. Confirm Button Press once to confirm a selection. The button does not have a function when using DJI Fly. 10. Touchscreen Touch the screen to operate the remote controller. Note that the touchscreen is not waterproof. Operate with caution. 11. microSD Card Slot Use to insert a microSD card. https://dl.djicdn.com/downloads/DJI_Mavic_3/DJI_Mavic_3_User_Manual_v2.0_en.pdf
[13d] transmitting the sensed flight performance data to a transceiver having a transceiver identity	The Accused DJI Drones perform transmitting the sensed flight performance data to a transceiver having a transceiver identity associated with pilot identification information. For example, the Accused DJI Drones transmit sensed flight performance data to an RC controller comprising a wireless transceiver (in the RC controller and/or in an attached mobile

associated with pilot identification information;	phone), the RC controller has a transceiver identity associated with pilot identification information (e.g., DJI account login credentials). • **Telemetry Data** refers to data recorded regarding a drone's flight, including altitude, speed, distance, location (e.g., GPS coordinates). Telemetry data also includes a log of the user's control stick operation, which can be used for diagnostic purposes. In the DJI flight control app, this telemetry data is compiled into one log per flight called the "Flight Record." This data is first generated in the drone and the remote controller, and it is constantly transmitted to the mobile device connected to the remote controller, which communicates with the drone. After receiving this telemetry data, the mobile device stores the data locally as part of the flight control app. The flight control app does not automatically transmit telemetry data to DJI servers. To synchronize this telemetry data to DJI's servers for backup purposes, the user must manually use the "Sync" button on the DJI GO interface. One purpose of this "Sync" function is to allow DJI's aftersales service personnel to analyze a user's flight history in order to determine causes of drone malfunctions or crashes. Another is to provide a backup mechanism for our users who need to maintain flight records, as well as to allow a single user account to be used with a common set of flight logs across multiple mobile devices. https://security.dji.com/news?newsId=case-4&lang=en_US • **Photography/Videography Data** includes photos and video recorded by the drone's main camera sensors. This data is stored on board the drone in an SD card. The user may also choose to save lower-resolution versions of the photography/videography data locally within the flight control app on the user's mobile device. The flight control app does not automatically transmit any photography/videography data to DJI servers. Instead, each time a user wants to share this data, the user must manually turn on the sharing feature. https://security.dji.com/news?newsId=case-4&lang=en_US

	Introduction DJI aircraft caries telemetry system for the safety of the pilots and persons on the ground during flights. Telemetry from an on-board flight system is the primary source of real-time measurement and status information transmitted to the pilot. DJI Onboard SDK provides API to read telemetry data in real time in subscription or broadcast fashion. Example of the data include: • Sensor readings such as gyroscope and magnetometer • Fusion data such as attitude and global position • Aircraft information such as battery, gimbal, and flight status https://developer.dji.com/onboard-sdk/documentation/guides/component-guide-telemetry.html • **Obstacle Avoidance Data** is recorded by the obstacle avoidance image sensors (e.g., the two "eyes" at the front of Mavic or Phantom 4). This feature helps to protect buildings, people, and animals from drone collisions. This type of imaging data is limited to low resolution video, with no audio. Like telemetry data, DJI sometimes analyzes obstacle avoidance data to determine causes of drone malfunctions or crashes. The flight control app does not automatically transmit obstacle avoidance data to DJI servers. Obstacle avoidance data may only be transmitted in response to manual triggering in the flight control app. The flight control app does not permit automatic transmission of obstacle avoidance data. https://security.dji.com/news?newsId=case-4&lang=en_US

	Broadcast In data broadcast mechanism, the data package arrives at a pre-configured frequency. The frequency can be modified across your application via DJI Onboard API or it can be changed via DJI Assistant 2 before the flight. Available Broadcast Data Broadcast data arives in a package containing state information for components listed below: • **Timestamp** • **Hardware Synchronization Timestamp** • **Quaternion** • **Angular Rate** • **Velocity** • **Gyroscope Reading** • **Global Position** • **Relative Position** • **GPS** • **RTK** • **Magnetometer** • **Remote Controller** • **Gimbal** • **Flight Status** • **Battery** https://developer.dji.com/onboard-sdk/documentation/guides/component-guide-telemetry.html

	By default, DJI drones do not automatically transmit most types of user data without user authorization, including media files (photos and videos) and flight logs (detailed telemetry and location information compiled during the flight). Users can choose whether to share most types of data collected by DJI products within the DJI GO App, available for both Android and iOS. For example, a user must affirmatively choose to share media files or flight logs. DJI drones are capable of collecting different types of data, together with DJI's flight control apps, such as DJI GO and DJI GO 4. These flight control apps augment the drone's physical remote controller to provide users with better control of the drone. Most of DJI's drone remote controllers do not have a video display, and so the flight control app, running on the customer's mobile device, provides a live video feed and other advanced controls when paired with the DJI remote controller. The flight control app is the only part of a DJI product that has the ability to connect to the internet. Other software developers have created flight control, photography, and mapping apps for DJI drones, and our customers have the choice to use those as alternatives to DJI's flight control apps. https://security.dji.com/news?newsId=case-4&lang=en_US • **Photography/Videography Data** includes photos and video recorded by the drone's main camera sensors. This data is stored on board the drone in an SD card. The user may also choose to save lower-resolution versions of the photography/videography data locally within the flight control app on the user's mobile device. The flight control app does not automatically transmit any photography/videography data to DJI servers. Instead, each time a user wants to share this data, the user must manually turn on the sharing feature. https://security.dji.com/news?newsId=case-4&lang=en_US

	• **Telemetry Data** refers to data recorded regarding a drone's flight, including altitude, speed, distance, location (e.g., GPS coordinates). Telemetry data also includes a log of the user's control stick operation, which can be used for diagnostic purposes. In the DJI flight control app, this telemetry data is compiled into one log per flight called the "Flight Record." This data is first generated in the drone and the remote controller, and it is constantly transmitted to the mobile device connected to the remote controller, which communicates with the drone. After receiving this telemetry data, the mobile device stores the data locally as part of the flight control app. The flight control app does not automatically transmit telemetry data to DJI servers. To synchronize this telemetry data to DJI's servers for backup purposes, the user must manually use the "Sync" button on the DJI GO interface. One purpose of this "Sync" function is to allow DJI's aftersales service personnel to analyze a user's flight history in order to determine causes of drone malfunctions or crashes. Another is to provide a backup mechanism for our users who need to maintain flight records, as well as to allow a single user account to be used with a common set of flight logs across multiple mobile devices. https://security.dji.com/news?newsId=case-4&lang=en_US • **Obstacle Avoidance Data** is recorded by the obstacle avoidance image sensors (e.g., the two "eyes" at the front of Mavic or Phantom 4). This feature helps to protect buildings, people, and animals from drone collisions. This type of imaging data is limited to low resolution video, with no audio. Like telemetry data, DJI sometimes analyzes obstacle avoidance data to determine causes of drone malfunctions or crashes. The flight control app does not automatically transmit obstacle avoidance data to DJI servers. Obstacle avoidance data may only be transmitted in response to manual triggering in the flight control app. The flight control app does not permit automatic transmission of obstacle avoidance data. https://security.dji.com/news?newsId=case-4&lang=en_US

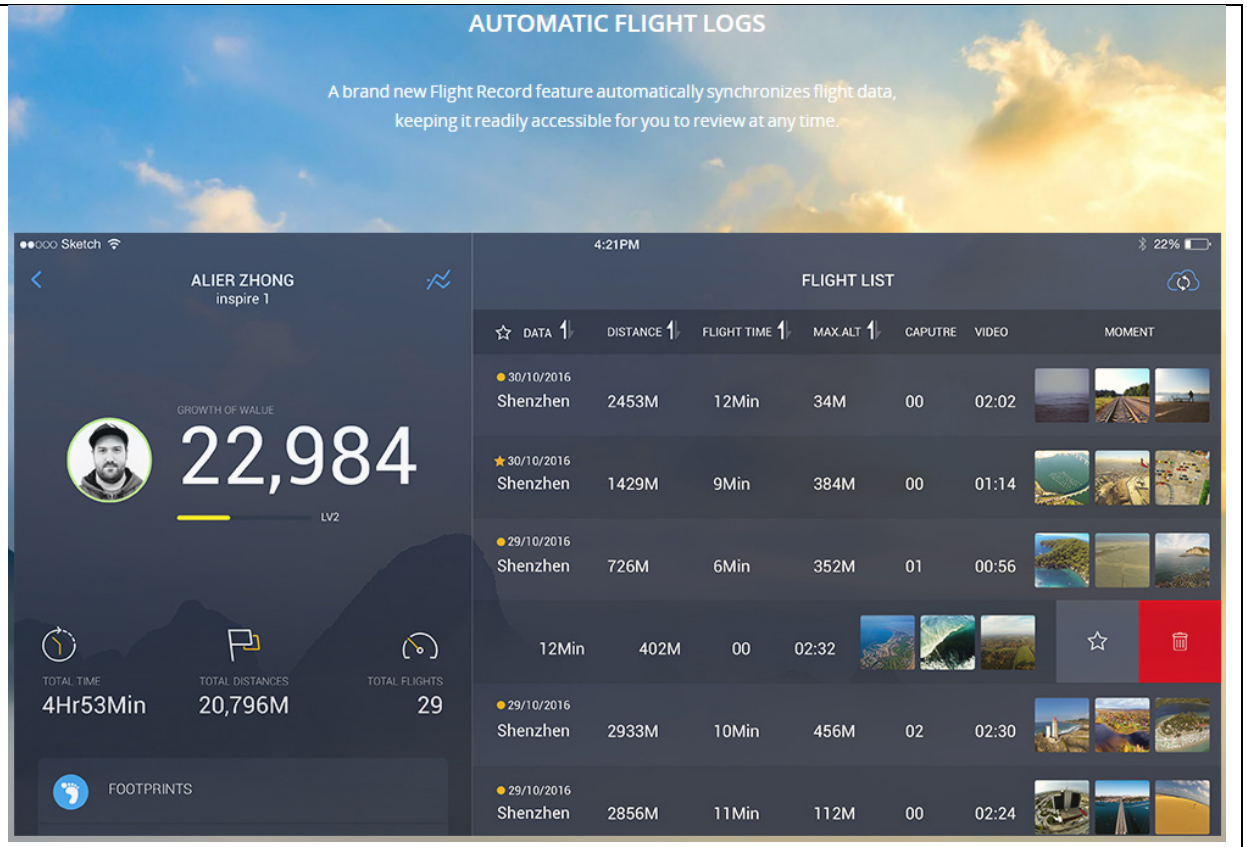

https://www.dji.com/goapp

	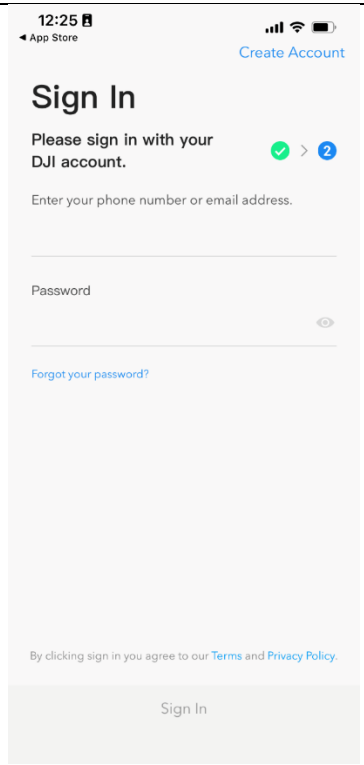 Screenshot from the DJI GO application for iOS
[13e] entering the pilot identification information directly on the transceiver; associating, by the transceiver, the sensed flight performance data received from the wireless transmitter with the pilot identification information associated with the transceiver identity;	The Accused DJI Drones perform entering the pilot identification information directly on the transceiver and associating, by the transceiver, the sensed flight performance data received from the wireless transmitter with the pilot identification information associated with the transceiver identity. For example, the transceiver includes a touchscreen that allows the pilot to enter identification information (e.g., DJI login credentials). This process associates the sensed flight performance data received from the wireless transmitter of the drone with the pilot identification information associated with the transceiver identity.

	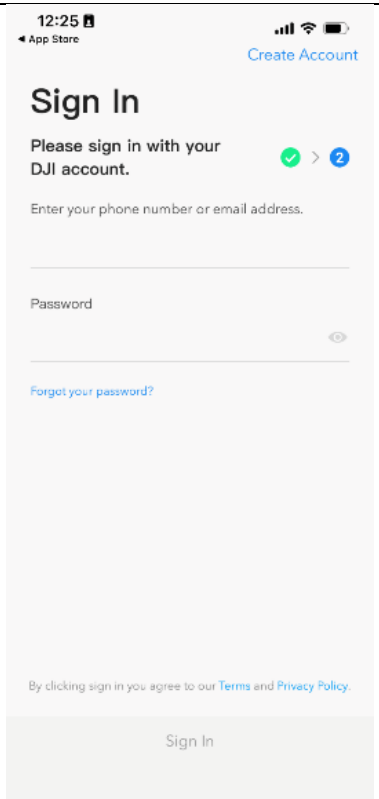 Screenshot from the DJI GO application for iOS

	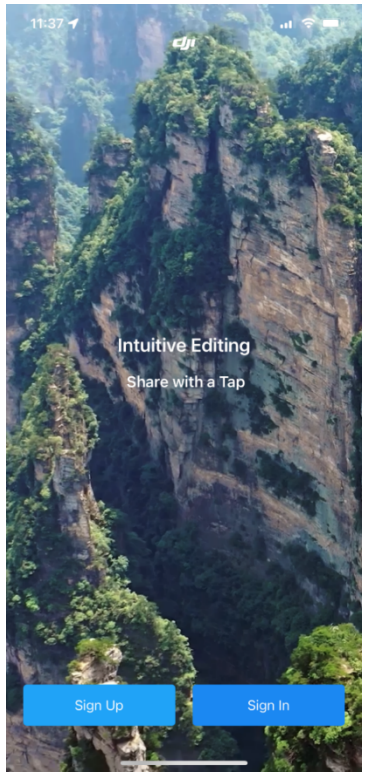 Screenshot from the DJI GO 4 application for iOS

	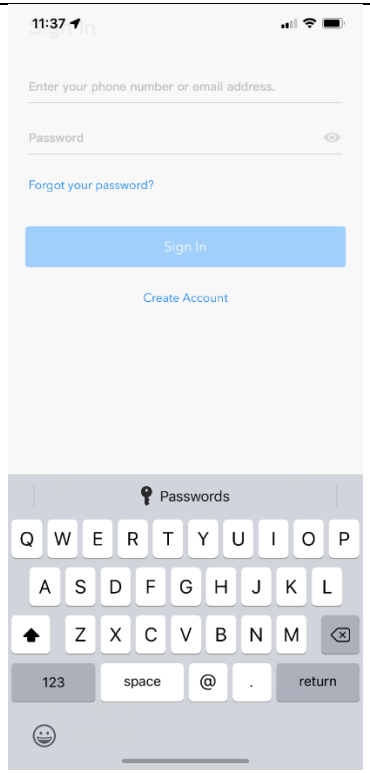 Screenshot of the DJI GO 4 application for iOS

	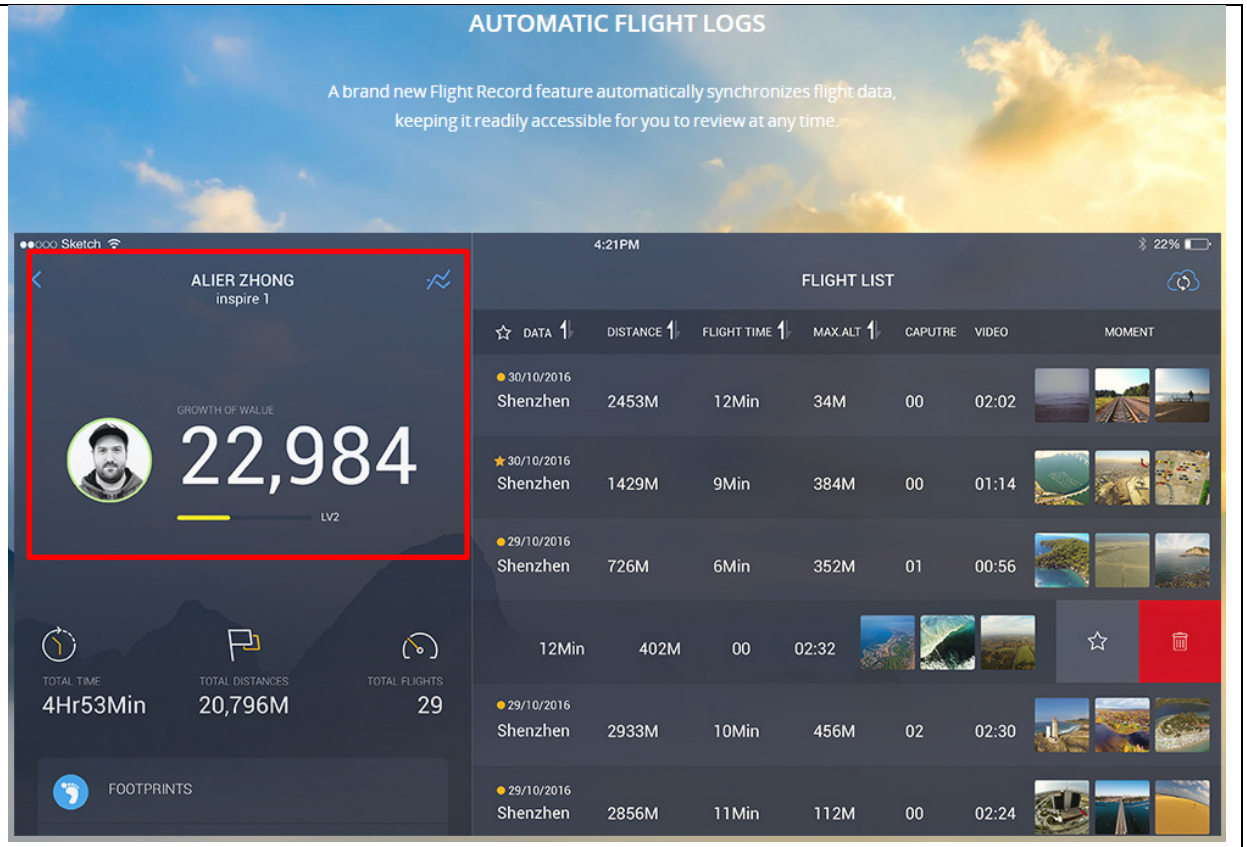 https://www.dji.com/goapp
[13f] transmitting, by the transceiver, the received sensed flight performance data with the associated pilot identification information to a database; and	The Accused DJI Drones perform transmitting, by the transceiver, the received sensed flight performance data with the associated pilot identification information to a database. For example, the wireless transceiver of the RC controller and/or mobile phone performs transmitting the received information with the thus associated pilot identification to the database.

	• **Telemetry Data** refers to data recorded regarding a drone's flight, including altitude, speed, distance, location (e.g., GPS coordinates). Telemetry data also includes a log of the user's control stick operation, which can be used for diagnostic purposes. In the DJI flight control app, this telemetry data is compiled into one log per flight called the "Flight Record." This data is first generated in the drone and the remote controller, and it is constantly transmitted to the mobile device connected to the remote controller, which communicates with the drone. After receiving this telemetry data, the mobile device stores the data locally as part of the flight control app. The flight control app does not automatically transmit telemetry data to DJI servers. To synchronize this telemetry data to DJI's servers for backup purposes, the user must manually use the "Sync" button on the DJI GO interface. One purpose of this "Sync" function is to allow DJI's aftersales service personnel to analyze a user's flight history in order to determine causes of drone malfunctions or crashes. Another is to provide a backup mechanism for our users who need to maintain flight records, as well as to allow a single user account to be used with a common set of flight logs across multiple mobile devices. https://security.dji.com/news?newsId=case-4&lang=en_US • **Photography/Videography Data** includes photos and video recorded by the drone's main camera sensors. This data is stored on board the drone in an SD card. The user may also choose to save lower-resolution versions of the photography/videography data locally within the flight control app on the user's mobile device. The flight control app does not automatically transmit any photography/videography data to DJI servers. Instead, each time a user wants to share this data, the user must manually turn on the sharing feature. https://security.dji.com/news?newsId=case-4&lang=en_US

	Introduction DJI aircraft caries telemetry system for the safety of the pilots and persons on the ground during flights. Telemetry from an on-board flight system is the primary source of real-time measurement and status information transmitted to the pilot. DJI Onboard SDK provides API to read telemetry data in real time in subscription or broadcast fashion. Example of the data include: • Sensor readings such as gyroscope and magnetometer • Fusion data such as attitude and global position • Aircraft information such as battery, gimbal, and flight status https://developer.dji.com/onboard-sdk/documentation/guides/component-guide-telemetry.html • **Obstacle Avoidance Data** is recorded by the obstacle avoidance image sensors (e.g., the two "eyes" at the front of Mavic or Phantom 4). This feature helps to protect buildings, people, and animals from drone collisions. This type of imaging data is limited to low resolution video, with no audio. Like telemetry data, DJI sometimes analyzes obstacle avoidance data to determine causes of drone malfunctions or crashes. The flight control app does not automatically transmit obstacle avoidance data to DJI servers. Obstacle avoidance data may only be transmitted in response to manual triggering in the flight control app. The flight control app does not permit automatic transmission of obstacle avoidance data. https://security.dji.com/news?newsId=case-4&lang=en_US

	Broadcast In data broadcast mechanism, the data package arrives at a pre-configured frequency. The frequency can be modified across your application via DJI Onboard API or it can be changed via DJI Assistant 2 before the flight. Available Broadcast Data Broadcast data arives in a package containing state information for components listed below: • Timestamp • Hardware Synchronization Timestamp • Quaternion • Angular Rate • Velocity • Gyroscope Reading • Global Position • Relative Position • GPS • RTK • Magnetometer • Remote Controller • Gimbal • Flight Status • Battery https://developer.dji.com/onboard-sdk/documentation/guides/component-guide-telemetry.html

	By default, DJI drones do not automatically transmit most types of user data without user authorization, including media files (photos and videos) and flight logs (detailed telemetry and location information compiled during the flight). Users can choose whether to share most types of data collected by DJI products within the DJI GO App, available for both Android and iOS. For example, a user must affirmatively choose to share media files or flight logs. DJI drones are capable of collecting different types of data, together with DJI's flight control apps, such as DJI GO and DJI GO 4. These flight control apps augment the drone's physical remote controller to provide users with better control of the drone. Most of DJI's drone remote controllers do not have a video display, and so the flight control app, running on the customer's mobile device, provides a live video feed and other advanced controls when paired with the DJI remote controller. The flight control app is the only part of a DJI product that has the ability to connect to the internet. Other software developers have created flight control, photography, and mapping apps for DJI drones, and our customers have the choice to use those as alternatives to DJI's flight control apps. https://security.dji.com/news?newsId=case-4&lang=en_US • **Photography/Videography Data** includes photos and video recorded by the drone's main camera sensors. This data is stored on board the drone in an SD card. The user may also choose to save lower-resolution versions of the photography/videography data locally within the flight control app on the user's mobile device. The flight control app does not automatically transmit any photography/videography data to DJI servers. Instead, each time a user wants to share this data, the user must manually turn on the sharing feature. https://security.dji.com/news?newsId=case-4&lang=en_US

DJI RC Pro

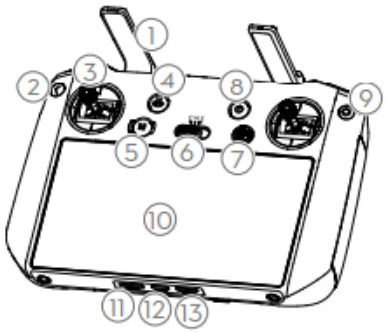

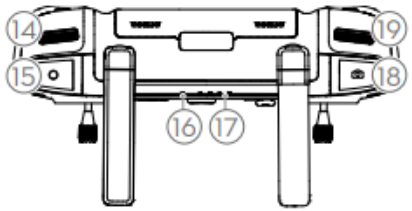

1. **Antennas**
   Relay aircraft control and video wireless signals.
2. **Back Button**
   Press once to return to the previous screen. Press twice to return to the home screen.
3. **Control Sticks**
   Use the control sticks to control the aircraft movements. Set the flight control mode in DJI

9. **Confirm Button**
   Press once to confirm a selection. The button does not have a function when using DJI Fly.
10. **Touchscreen**
    Touch the screen to operate the remote controller. Note that the touchscreen is not waterproof. Operate with caution.
11. **microSD Card Slot**
    Use to insert a microSD card.

https://dl.djicdn.com/downloads/DJI_Mavic_3/DJI_Mavic_3_User_Manual_v2.0_en.pdf

	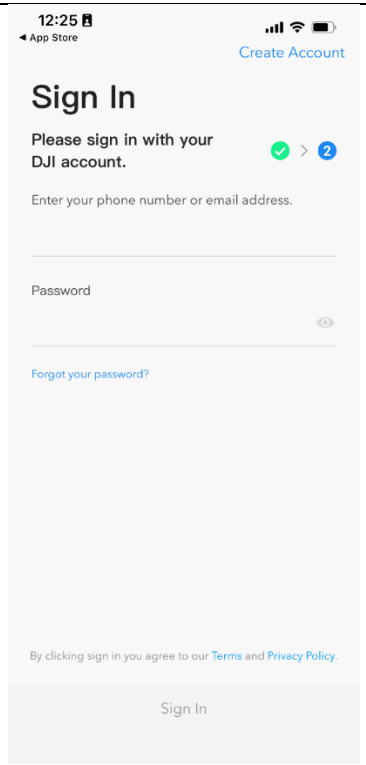 Screenshot from the DJI GO application for iOS

	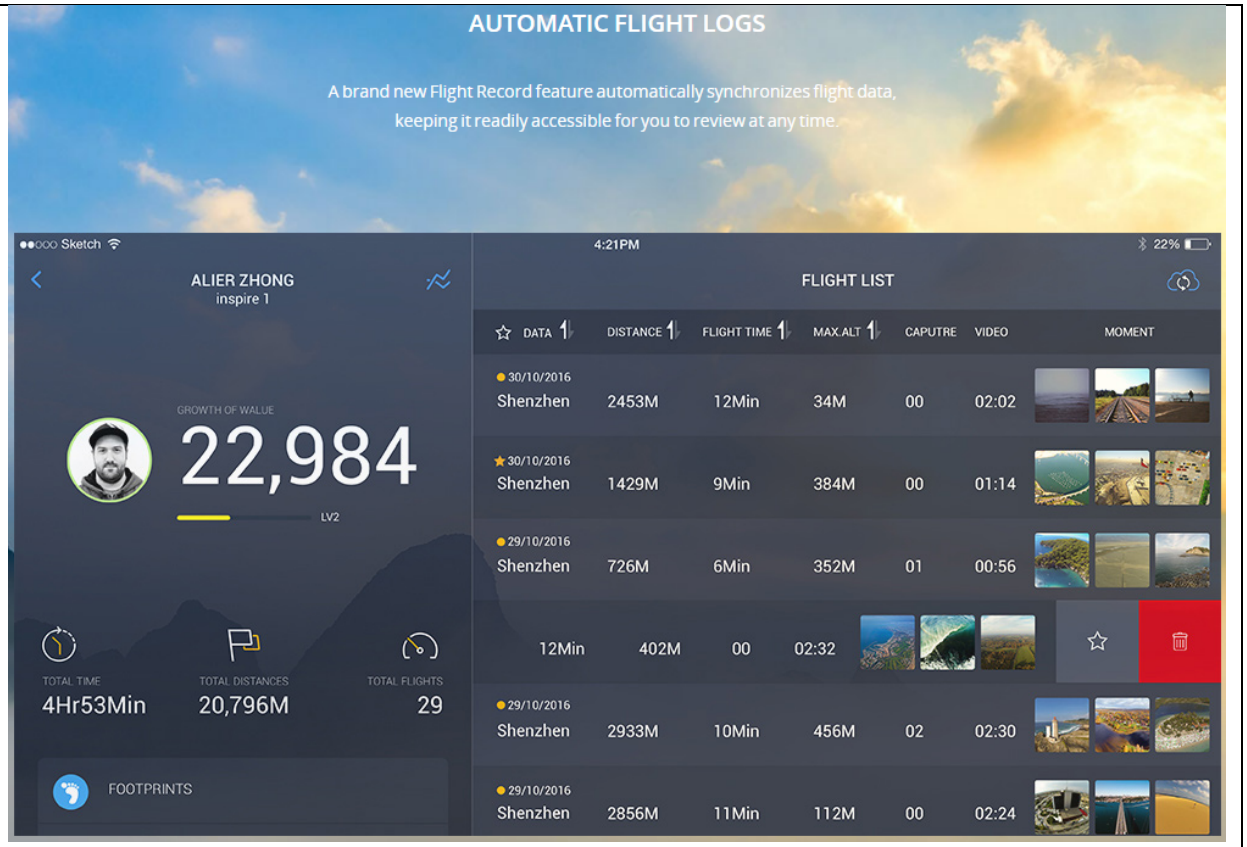 https://www.dji.com/goapp
[13g] allowing access to the received sensed flight performance data only with the associated pilot identification information.	The Accused DJI Drones allow access to the stored sensed flight performance data only with the associated pilot identification information. For example, the DJI mobile applications require DJI login credentials to access the stored sensed flight performance. As another example, at least some types of stored flight performance require user permission before transmission to a database.

	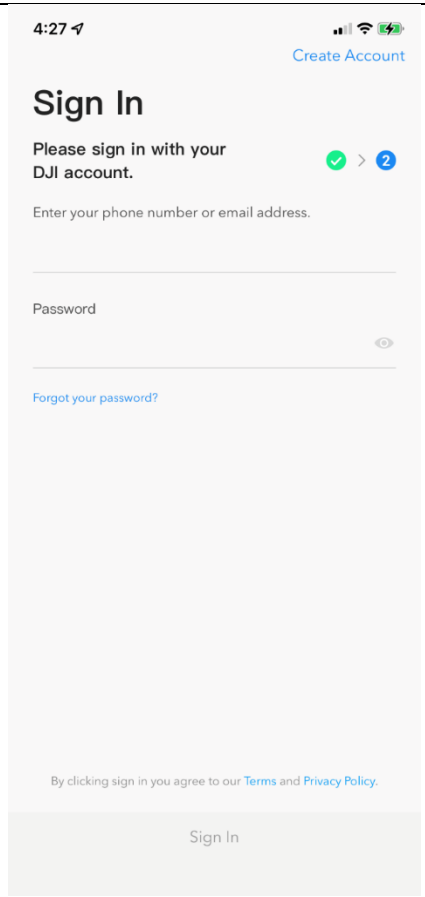 Screenshot from the DJI GO application for iOS

	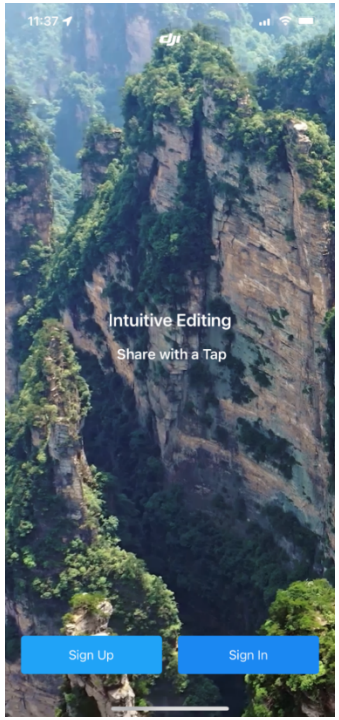 Screenshot from the DJI GO 4 application for iOS

	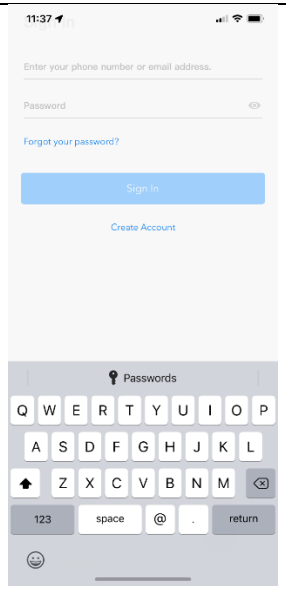 Screenshot of the DJI GO 4 application for iOS • **Telemetry Data** refers to data recorded regarding a drone's flight, including altitude, speed, distance, location (e.g., GPS coordinates). Telemetry data also includes a log of the user's control stick operation, which can be used for diagnostic purposes. In the DJI flight control app, this telemetry data is compiled into one log per flight called the "Flight Record." This data is first generated in the drone and the remote controller, and it is constantly transmitted to the mobile device connected to the remote controller, which communicates with the drone. After receiving this telemetry data, the mobile device stores the data locally as part of the flight control app. The flight control app does not automatically transmit telemetry data to DJI servers. To synchronize this telemetry data to DJI's servers for backup purposes, the user must manually use the "Sync" button on the DJI GO interface. One purpose of this "Sync" function is to allow DJI's aftersales service personnel to analyze a user's flight history in order to determine causes of drone malfunctions or crashes. Another is to provide a backup mechanism for our users who need to maintain flight records, as well as to allow a single user account to be used with a common set of flight logs across multiple mobile devices. https://security.dji.com/news?newsId=case-4&lang=en_US

	• **Obstacle Avoidance Data** is recorded by the obstacle avoidance image sensors (e.g., the two "eyes" at the front of Mavic or Phantom 4). This feature helps to protect buildings, people, and animals from drone collisions. This type of imaging data is limited to low resolution video, with no audio. Like telemetry data, DJI sometimes analyzes obstacle avoidance data to determine causes of drone malfunctions or crashes. The flight control app does not automatically transmit obstacle avoidance data to DJI servers. Obstacle avoidance data may only be transmitted in response to manual triggering in the flight control app. The flight control app does not permit automatic transmission of obstacle avoidance data. https://security.dji.com/news?newsId=case-4&lang=en_US • **Photography/Videography Data** includes photos and video recorded by the drone's main camera sensors. This data is stored on board the drone in an SD card. The user may also choose to save lower-resolution versions of the photography/videography data locally within the flight control app on the user's mobile device. The flight control app does not automatically transmit any photography/videography data to DJI servers. Instead, each time a user wants to share this data, the user must manually turn on the sharing feature. https://security.dji.com/news?newsId=case-4&lang=en_US
[14] The method of claim 13, wherein the transmitting by the transceiver of the associated sensed flight performance data and pilot identification information includes wirelessly transmitting the associated sensed flight performance data and pilot identification information to the database.	The Accused DJI Drones perform wirelessly transmitting the associated sensed flight performance data and pilot identification information to the database.

	• **Telemetry Data** refers to data recorded regarding a drone's flight, including altitude, speed, distance, location (e.g., GPS coordinates). Telemetry data also includes a log of the user's control stick operation, which can be used for diagnostic purposes. In the DJI flight control app, this telemetry data is compiled into one log per flight called the "Flight Record." This data is first generated in the drone and the remote controller, and it is constantly transmitted to the mobile device connected to the remote controller, which communicates with the drone. After receiving this telemetry data, the mobile device stores the data locally as part of the flight control app. The flight control app does not automatically transmit telemetry data to DJI servers. To synchronize this telemetry data to DJI's servers for backup purposes, the user must manually use the "Sync" button on the DJI GO interface. One purpose of this "Sync" function is to allow DJI's aftersales service personnel to analyze a user's flight history in order to determine causes of drone malfunctions or crashes. Another is to provide a backup mechanism for our users who need to maintain flight records, as well as to allow a single user account to be used with a common set of flight logs across multiple mobile devices. https://security.dji.com/news?newsId=case-4&lang=en_US Sensors The Flight controller manages several sub components of the aircraft including sensors and landing gear. https://developer.dji.com/onboard-sdk/documentation/guides/component-guide-flight-control.html Introduction DJI aircraft caries telemetry system for the safety of the pilots and persons on the ground during flights. Telemetry from an on-board flight system is the primary source of real-time measurement and status information transmitted to the pilot. DJI Onboard SDK provides API to read telemetry data in real time in subscription or broadcast fashion. Example of the data include: • Sensor readings such as gyroscope and magnetometer • Fusion data such as attitude and global position • Aircraft information such as battery, gimbal, and flight status

	https://developer.dji.com/onboard-sdk/documentation/guides/component-guide-telemetry.html Broadcast In data broadcast mechanism, the data package arrives at a pre-configured frequency. The frequency can be modified across your application via DJI Onboard API or it can be changed via DJI Assistant 2 before the flight. Available Broadcast Data Broadcast data arives in a package containing state information for components listed below: • Timestamp • Hardware Synchronization Timestamp • Quaternion • Angular Rate • Velocity • Gyroscope Reading • Global Position • Relative Position • GPS • RTK • Magnetometer • Remote Controller • Gimbal • Flight Status • Battery https://developer.dji.com/onboard-sdk/documentation/guides/component-guide-telemetry.html Flight Recorder Flight data including flight telemetry, aircraft status information, and other parameters are automatically saved to the internal data recorder of the aircraft. The data can be accessed using DJI Assistant 2 (Consumer Drones Series).

https://dl.djicdn.com/downloads/DJI_Mavic_3/20220531/DJI_Mavic_3_User_Manual_v1.6_en.pdf

Video Transmission

Video Transmission System	O3+
Live View Quality	Remote Controller: 1080p@30fps/1080p@60fps
Operation Frequency	2.400-2.4835 GHz 5.725-5.850 GHz
Max Transmission Distance (unobstructed, free of interference and aligned with controller)	2.400-2.4835 GHz; 5.725-5.850 GHz FCC: 15 km CE: 8 km SRRC: 8 km MIC: 8 km
Signal Transmission Ranges (FCC)	Strong Interference (urban landscape, limited line of sight, many competing signals): Approx. 1.5-3 km Medium Interference (suburban landscape, open line of sight, some competing signals): Approx. 3-9 km Low Interference (open landscape abundant line of sight, few competing signals): Approx. 9-15 km Data is tested under different standards in open areas free of interference. It only refers to the maximum, one-way flight distance without considering Return to Home. Please pay attention to RTH prompts in the DJI Fly app during actual flight.
Max Download Bitrate	O3+: 5.5MB/s (with RC-N1 remote controller) 15MB/s (with DJI RC Pro remote controller) Wi-Fi 6: 80MB/s
Latency (depending on environmental conditions and mobile device)	130 ms (with RC-N1 remote controller) 120 ms (with DJI RC Pro remote controller)
Antennas	4 antennas, 2T4R
Transmitter Power (EIRP)	2.4 GHz: ≤33 dBm (FCC); ≤20 dBm (CE/SRRC/MIC) 5.8 GHz: ≤33 dBm (FCC), ≤30 dBm(SRRC), ≤14 dBm(CE)

https://www.dji.com/mavic-3/specs

	Storage **Recommended microSD Cards** Standard bitrate video recommended microSD Cards: H.265 : 5.1K : 5120x2700@24/25/30/48/50fps DCI 4K : 4096x2160@24/25/30/48/50/60/120fps 4K: 3840x2160@24/25/30/48/50/60/120fps FHD : 1920x1080@24/25/30/48/50/60/120/200fps H.264 : DCI 4K : 4096x2160@24/25/30/48/50/60fps 4K : 3840x2160@24/25/30/48/50/60fps FHD: 1920x1080@24/25/30/48/50/60/120/200fps SanDisk Extreme Pro 64G v30 A2 microSDXC SanDisk Extreme Pro 128G v30 A2 microSDXC https://www.dji.com/mavic-3/specs
[16] The method of claim 13, wherein the non-volatile memory card is an SD card.	The Accused DJI Drones include an SD card as the non-volatile memory card.

	Storage **Recommended microSD Cards** Standard bitrate video recommended microSD Cards: H.265 : 5.1K : 5120x2700@24/25/30/48/50fps DCI 4K : 4096x2160@24/25/30/48/50/60/120fps 4K: 3840x2160@24/25/30/48/50/60/120fps FHD : 1920x1080@24/25/30/48/50/60/120/200fps H.264 : DCI 4K : 4096x2160@24/25/30/48/50/60fps 4K : 3840x2160@24/25/30/48/50/60fps FHD: 1920x1080@24/25/30/48/50/60/120/200fps SanDisk Extreme Pro 64G v30 A2 microSDXC SanDisk Extreme Pro 128G v30 A2 microSDXC https://www.dji.com/mavic-3/specs