US008626568B2

(12) **United States Patent**
Warkentin et al.

(10) **Patent No.: US 8,626,568 B2**
(45) **Date of Patent: Jan. 7, 2014**

(54) **FLEET VEHICLE MANAGEMENT SYSTEMS AND METHODS**

(75) Inventors: **Colin D Warkentin**, St. Catharines (CA); **Rakinder Kalirai**, Burlington (CA); **Christopher Alexander Sekula**, Mississauga (CA)

(73) Assignee: **XRS Corporation**, Eden Prairie, MN (US)

(*) Notice: Subject to any disclaimer, the term of this patent is extended or adjusted under 35 U.S.C. 154(b) by 0 days.

(21) Appl. No.: **13/174,331**

(22) Filed: **Jun. 30, 2011**

(65) **Prior Publication Data**

US 2013/0006715 A1 Jan. 3, 2013

(51) **Int. Cl.**

G06Q 10/00	(2012.01)
G06Q 10/06	(2012.01)
G06Q 10/10	(2012.01)

(52) **U.S. Cl.**

CPC ***G06Q 10/0639*** (2013.01); ***G06Q 10/10*** (2013.01); *G06Q 10/063* (2013.01); *G06Q 10/06398* (2013.01); *G06Q 10/06* (2013.01)

USPC **705/7.38**

(58) **Field of Classification Search**

None

See application file for complete search history.

(56) **References Cited**

U.S. PATENT DOCUMENTS

5,359,528	A	10/1994	Haendel et al.
5,612,875	A	3/1997	Haendel et al.
5,694,322	A	12/1997	Westerlage et al.
5,953,319	A	9/1999	Dutta et al.
5,970,481	A	10/1999	Westerlage et al.
6,317,668	B1	11/2001	Thibault
6,421,590	B2	7/2002	Thibault
6,639,898	B1	10/2003	Dutta et al.
6,714,857	B2	3/2004	Kapolka et al.
6,904,363	B2	6/2005	Inbar et al.
6,938,099	B2	8/2005	Morton et al.
6,947,737	B2	9/2005	Massie et al.
7,024,199	B1	4/2006	Massie et al.
7,043,365	B2	5/2006	Inbar et al.
7,068,992	B1	6/2006	Massie et al.
7,089,322	B1	8/2006	Stallmann
7,117,075	B1	10/2006	Larschan et al.
7,136,642	B1	11/2006	Massie et al.
7,162,238	B1	1/2007	Massie et al.
7,230,944	B1	6/2007	Massie et al.

(Continued)

FOREIGN PATENT DOCUMENTS

KR	1020050038862	4/2005
KR	1020110011450	2/2011
WO	2007/022154	2/2007
WO	2007022154	2/2007

OTHER PUBLICATIONS

On Board Communications, SafetyTraks Web Application Guide, 2008 http://info.safetytraks.com/safetytraksusersmanual.pdf.*

(Continued)

Primary Examiner — Mark A Fleischer
Assistant Examiner — Octavian Rotaru
(74) *Attorney, Agent, or Firm* — Fish & Richardson P.C.

(57) **ABSTRACT**

Some embodiments of a system for communicating vehicle information can provide equipment for use inside a fleet vehicle to facilitate prompt and efficient transfer of vehicle and driver information. In particular embodiments, the system may include an electronic onboard recorder mountable in a vehicle and a mobile communication device that is configured to wireless communication with the electronic onboard recorder.

24 Claims, 8 Drawing Sheets

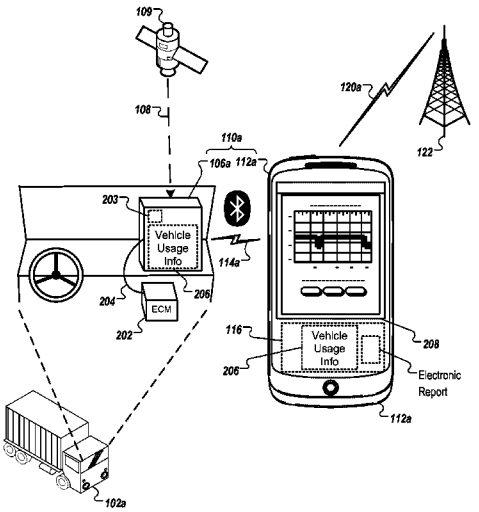

(56) **References Cited**

U.S. PATENT DOCUMENTS

7,401,741	B2	7/2008	Thayer	
7,784,707	B2	8/2010	Witty et al.	
7,802,729	B2	9/2010	Thayer	
8,442,508	B2	5/2013	Harter et al.	
2002/0032018	A1	3/2002	Morton et al.	
2002/0035421	A1*	3/2002	Warkentin	701/29
2002/0160771	A1	10/2002	Massie et al.	
2004/0039526	A1	2/2004	Inbar et al.	
2004/0162844	A1	8/2004	Thome et al.	
2005/0209778	A1	9/2005	Inbar et al.	
2006/0040239	A1	2/2006	Cummins et al.	
2006/0184613	A1	8/2006	Stienessen et al.	
2007/0038338	A1	2/2007	Larschan et al.	
2007/0038343	A1	2/2007	Larschan et al.	
2007/0038347	A1	2/2007	Larschan et al.	
2007/0038348	A1	2/2007	Larschan et al.	
2007/0038349	A1	2/2007	Larschan et al.	
2007/0038350	A1	2/2007	Larschan et al.	
2007/0038351	A1	2/2007	Larschan et al.	
2007/0038352	A1	2/2007	Larschan et al.	
2007/0038353	A1	2/2007	Larschan et al.	
2007/0050108	A1*	3/2007	Larschan et al.	701/35
2007/0267473	A1	11/2007	Thayer	
2007/0267509	A1	11/2007	Witty et al.	
2008/0188217	A1	8/2008	Harter et al.	
2008/0269978	A1	10/2008	Shirole et al.	
2010/0210212	A1*	8/2010	Sato	455/41.3
2011/0125663	A1	5/2011	Kraft	
2012/0065815	A1*	3/2012	Hess	701/2
2013/0006715	A1	1/2013	Warkentin et al.	

OTHER PUBLICATIONS

On Board Communications, FleetTraks Web Application Guide, 2007 http://www.onboardcommunications.com/2007%20Web%20Application%20User%20Guide.pdf.*

On Board Communications, FleetTraks Web Application Guide, 2008 http://www.dtegps.com/2008_Web_Application_User_Guide.pdf.*

EOBR testimonial from Intermodal C&K Trucking, for Xata Turnpike, Youtube, Uploaded by XataNation on Jun. 29, 2011 http://www.youtube.com/watch?v=Xg4y5KauJi0.*

tpMobile—Android Apps on Google Play, Google Play Webpages, Apr. 2011 https://play.google.com/store/apps/details?id=com.TPG.tpMobile&hl=en.*

EOBR Compliance on Android, Windows Mobile & Blackberry devices, by Xata Road, Youtube, uploaded by XataNation on May, 27 2011 http://www.youtube.com/watch?v=8XEC5ALV7uE.*

Fleet Management and EOBR—Xata Turnpike on Verizon, Youtube, uploaded by XataNation on Jun. 29, 2011 http://www.youtube.com/watch?v=t-_zsdixC20&feature=BFa&list=PL6CEE0D5DF5454180.*

EOBR Rules made easy with Xata Road Science, Youtube, uploaded by XataNation on May 5, 2011 http://www.youtube.com/watch?v=HIN6IH9MABs&feature=bf_next&list=PL6CEE0D5DF5454180.*

EOBR Compliance on Android, Windows Mobile and Blackberry devices—Xata, part 1, Youtube, uploaded by XataNation on May 27, 1011 http://www.youtube.com/watch?v=8XEC5ALV7uE&feature=bf_prev&list=PL6CEE0D5DF5454180.*

EOBR Compliance on Android, Windows Mobile and Blackberry devices—Xata, part 2, Youtube, uploaded by XataNation on May 27, 2011 http://www.youtube.com/watch?v=8XEC5ALV7uE&feature=bf_prev&list=PL6CEE0D5DF5454180.*

EOBR Install, Xata Turnpike Routetracker, Youtube, uploaded by XataNation on Jul. 21, 2011 http://www.youtube.com/watch?v=67mGY_5CYTE&feature=bf_next&list=PL6CEE0D5DF5454180.*

XATA—XRS Nation Fleet Management, Overview of posted videos, Youtube, Apr. 2011-2012.*

Xata turnpike, user manual v 3-5 for Motorola Phone, undated http://xrscorp.com/media/docs/drivers-manual-motorola.pdf.*

Xata tp mobile driver handbook for windows mobile, undated http://xrscorp.com/media/docs/drivers-manual-windows-mobile.pdf.*

Xata tp mobile driver handbook for android, undated http://xrscorp.com/media/docs/drivers-manual-android.pdf.*

Pritchett Trucking Inc. Renews Contract for MobileMax by Xata, Xata Webpages Mar. 16, 2010 http://xatadev2.firebrandmg.com/news/news-press-releases-events-and-investor-news/2010/16-march/.*

Predestination Transportation Chooses XATA for Fleet Management , Xata Webpages Mar. 12, 2010, http://xatadev2.firebrandmg.com/news/news-press-releases-events-and-investor-news/2010/12-march/.*

XATA and SpeedGauge Partner to Provide Enhanced Speed Data for Increased Safety, Xata webpages, Mar. 4, 2010 http://xatadev2.firebrandmg.com/news/news-press-releases-events-and-investor-news/2010/4-march/.*

TREQ-M4, Mobile Data Terminal Manual, Beijer Electronics, M01-003-00 Rev 02, Mar. 23, 2011 http://www.beijerelectronicsinc.com/pdf/osi_treq-m4_user_manual.pdf.*

OnBoard Communications, OBC9000 Installation Manual, undated http://www.onboardcommunications.com/install/OBC9000_Install.pdf.*

Winn-Dixie Enhances 450-Truck Fleet with XATANET, Xata webpages, Apr. 21, 2011 http://xatadev2.firebrandmg.com/news/news-press-releases-events-and-investor-news/2010/21-april/.*

Department of Transportation, Rules and Regulations, Federal Register Part II, vol. 75, No. 64, Apr. 5, 2010, 46 pages.

'On-Boardtechnology—Performance Management' [online]. J.J. Keller's Encompass, J. J. Keller & Associates, Inc., 2010 [retrieved on Jul. 22, 2011]. Retrieved from the Internet: <URL: http://www.kellerencompass.com/online/onboard_rec/index.aspx>.

Turnpike Global Technologies, "Introduction" (publicly available before Jun. 30, 2010), 13 pages.

Turnpike Global Technologies, "Route Tracker Installation Guide Version 1.0" (publicly available before Jun. 30, 2010), 7 pages.

Turnpike Global Technologies, "Automating the Transportation Industriy" (publicly available before Jun. 30, 2010), 4 pages.

Turnpike Global Technologies, "Trucking and Technology" (publicly available before Jun. 30, 2010), 10 pages.

Turnpike Global Technologies, Presentation of "Turnpike Global Technologies" (publicly available before une 30, 2010), 23 pages.

Turnpike Global Technologies, Presentation orTurnpike Global Technologies (publicly available before Jun. 30, 2010), 25 pages.

Turnpike Global Technologies, "Turnpike Direct Sprint Sales Intro Jan. 2008" (2008), 18 pages.

Korean Examiner Hong, Kyoung hee, International Search Report and Written Opinion for International PCT/US2012/044772, dated Jan. 21, 2013, 10 pages.

J.J. Keller's Encompass, "Phone & Hardware Requirements," May 5, 2011, 1 page.

* cited by examiner

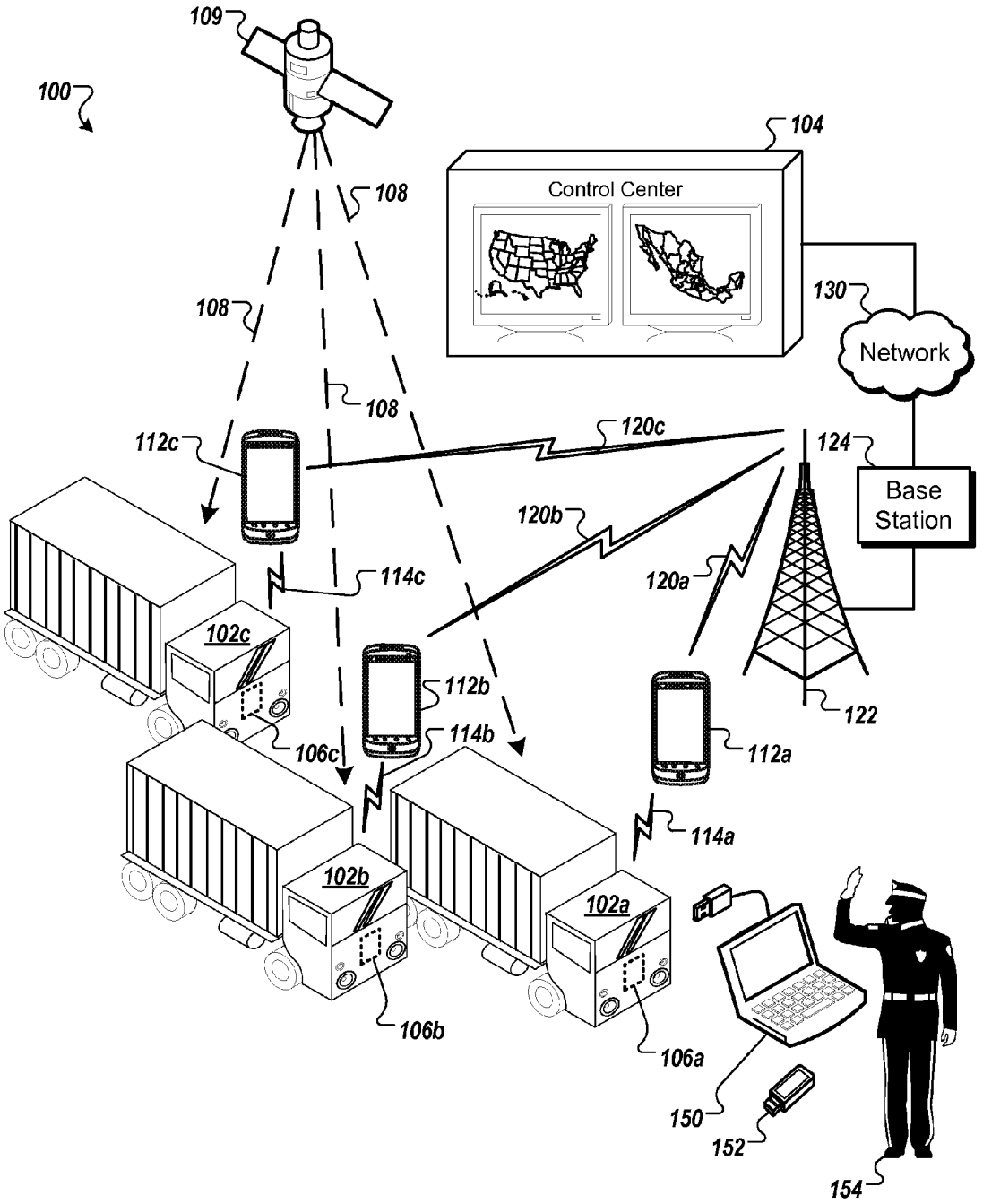
109
100
104
Control Center
108
108
108
130
Network
112c
120c
124
Base Station
120b
114c
120a
102c
112b
122
106c
114b
112a
114a
102b
102a
106b
106a
150
152
154

FIG. 1

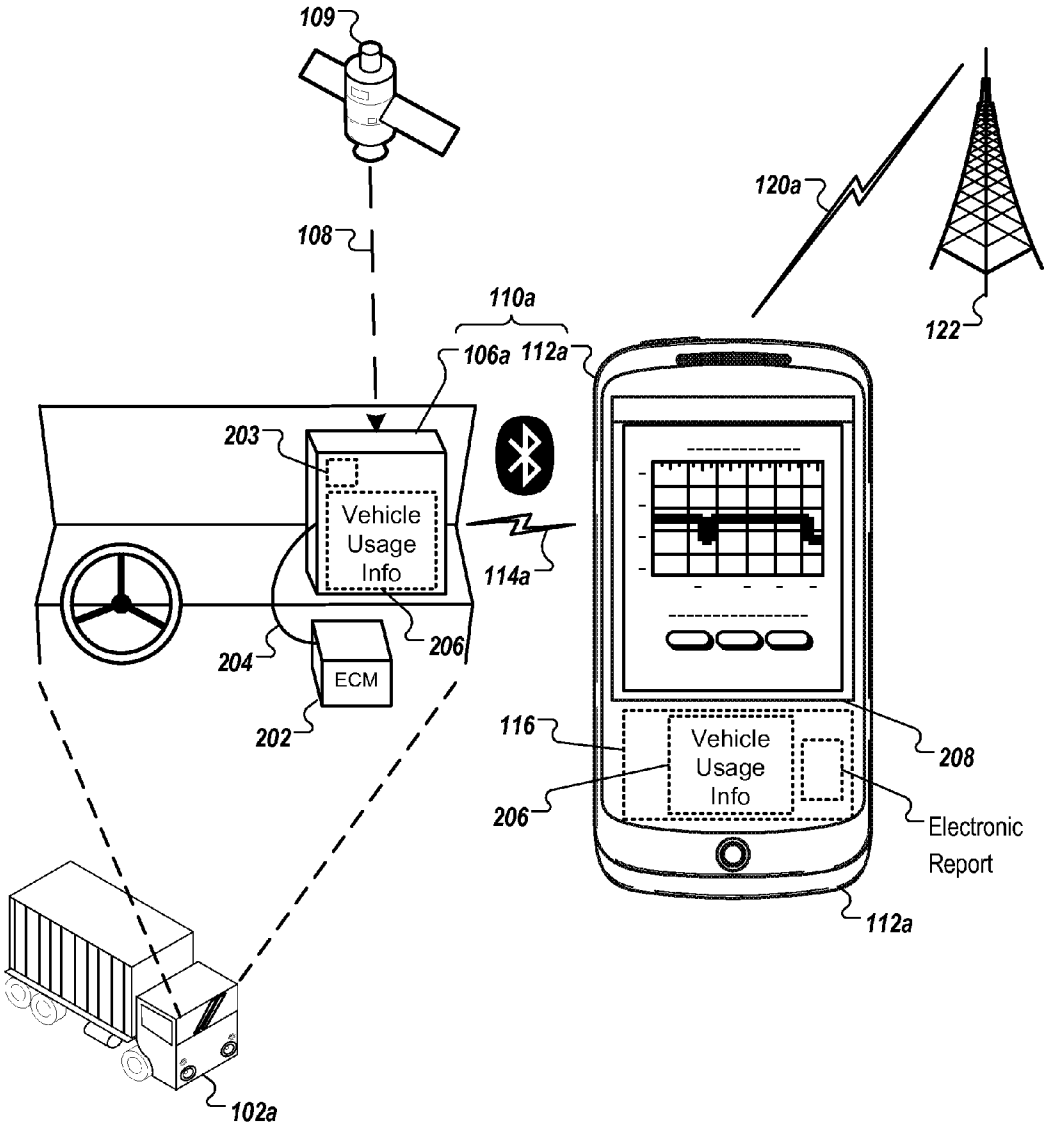
109
108
120a
122
110a
106a
112a
203
Vehicle
Usage
Info
114a
204
206
ECM
202
116
Vehicle
Usage
Info
208
206
Electronic
Report
112a
102a

FIG. 2

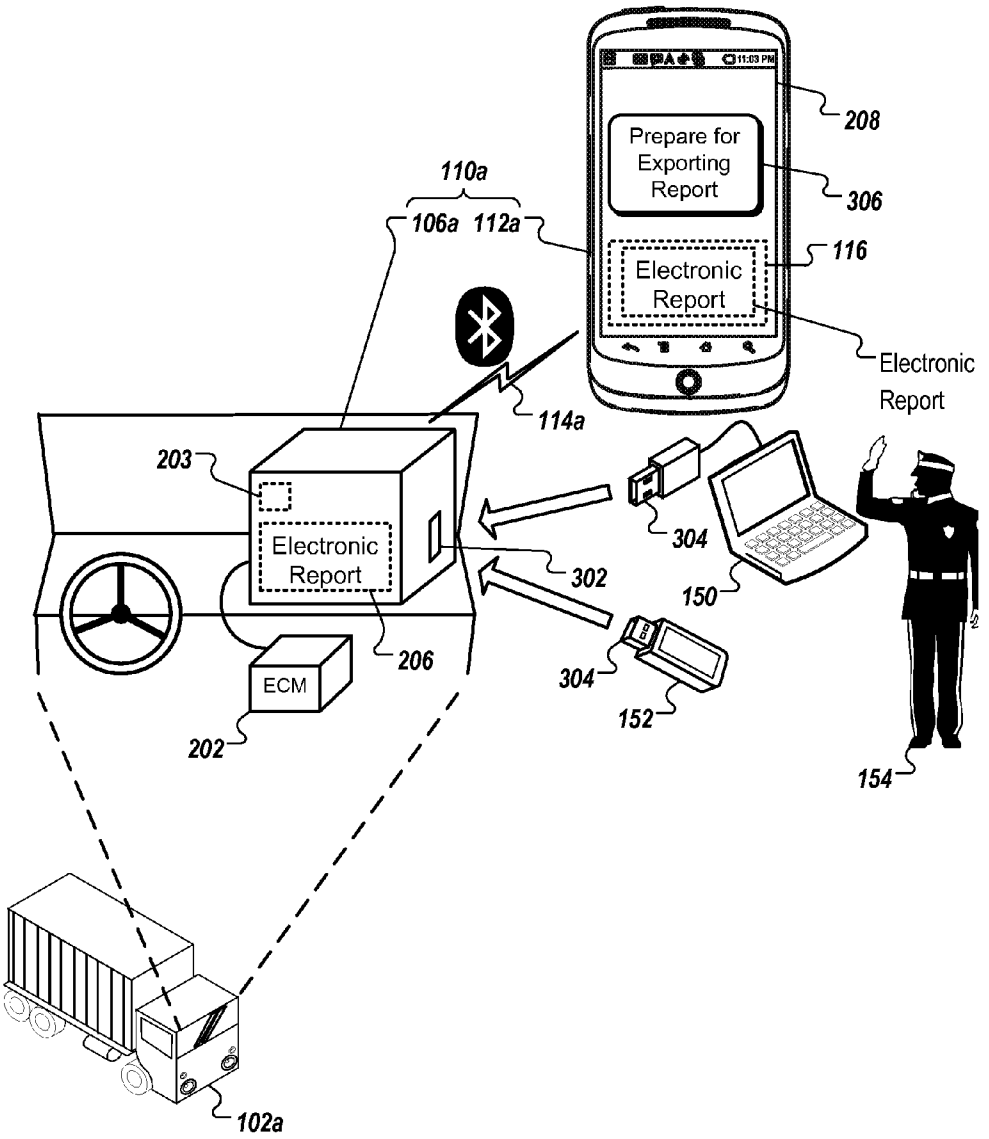
208
Prepare for Exporting Report
306
110a
106a 112a
116
Electronic Report
Electronic Report
114a
203
Electronic Report
302
304
150
206
ECM
202
304
152
154
102a

FIG. 3

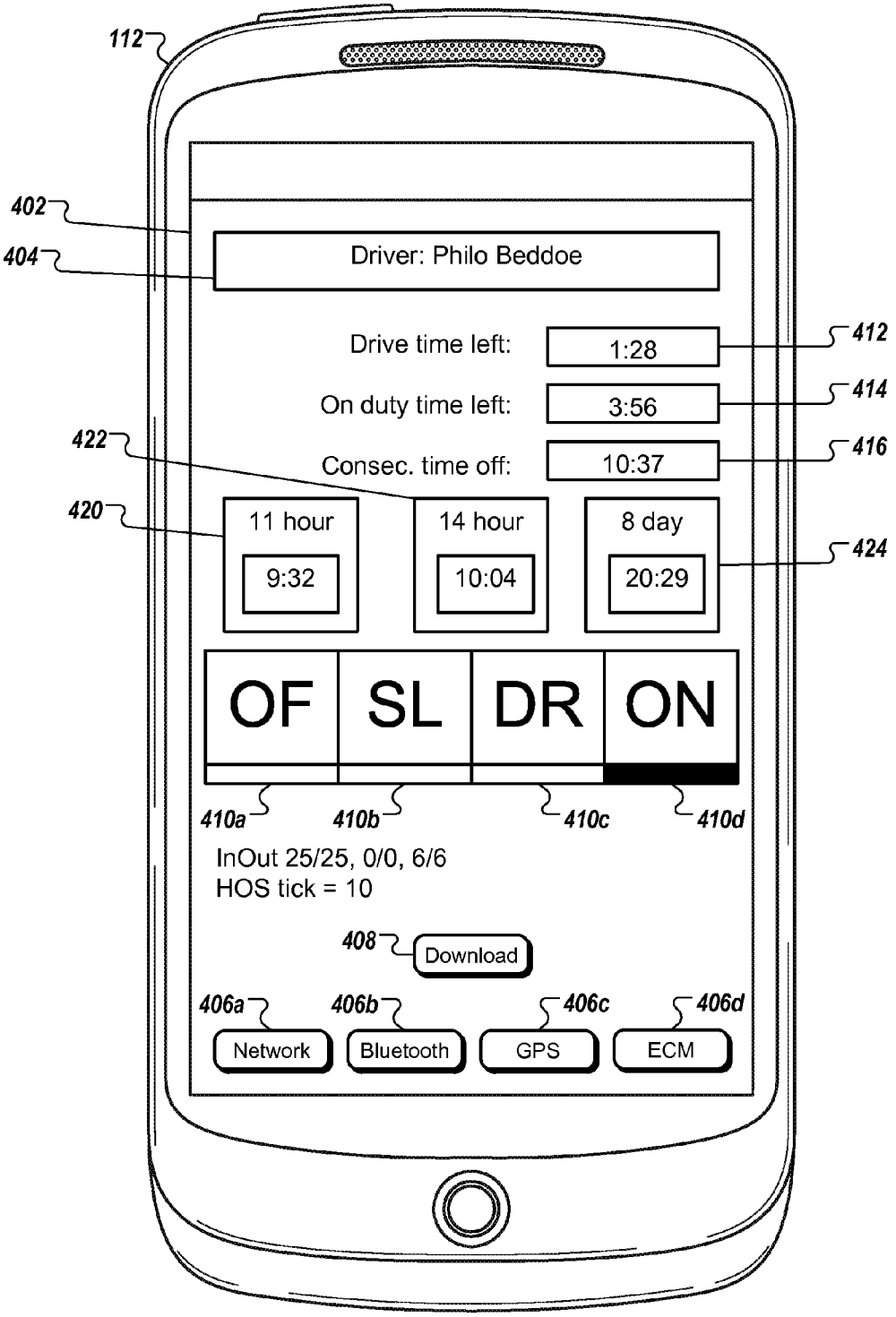
112
402
404
Driver: Philo Beddoe
Drive time left:
1:28
412
On duty time left:
3:56
414
422
Consec. time off:
10:37
416
420
11 hour
9:32
14 hour
10:04
8 day
20:29
424
OF
SL
DR
ON
410a
410b
410c
410d
InOut 25/25, 0/0, 6/6
HOS tick = 10
408
Download
406a
406b
406c
406d
Network
Bluetooth
GPS
ECM

FIG. 4A

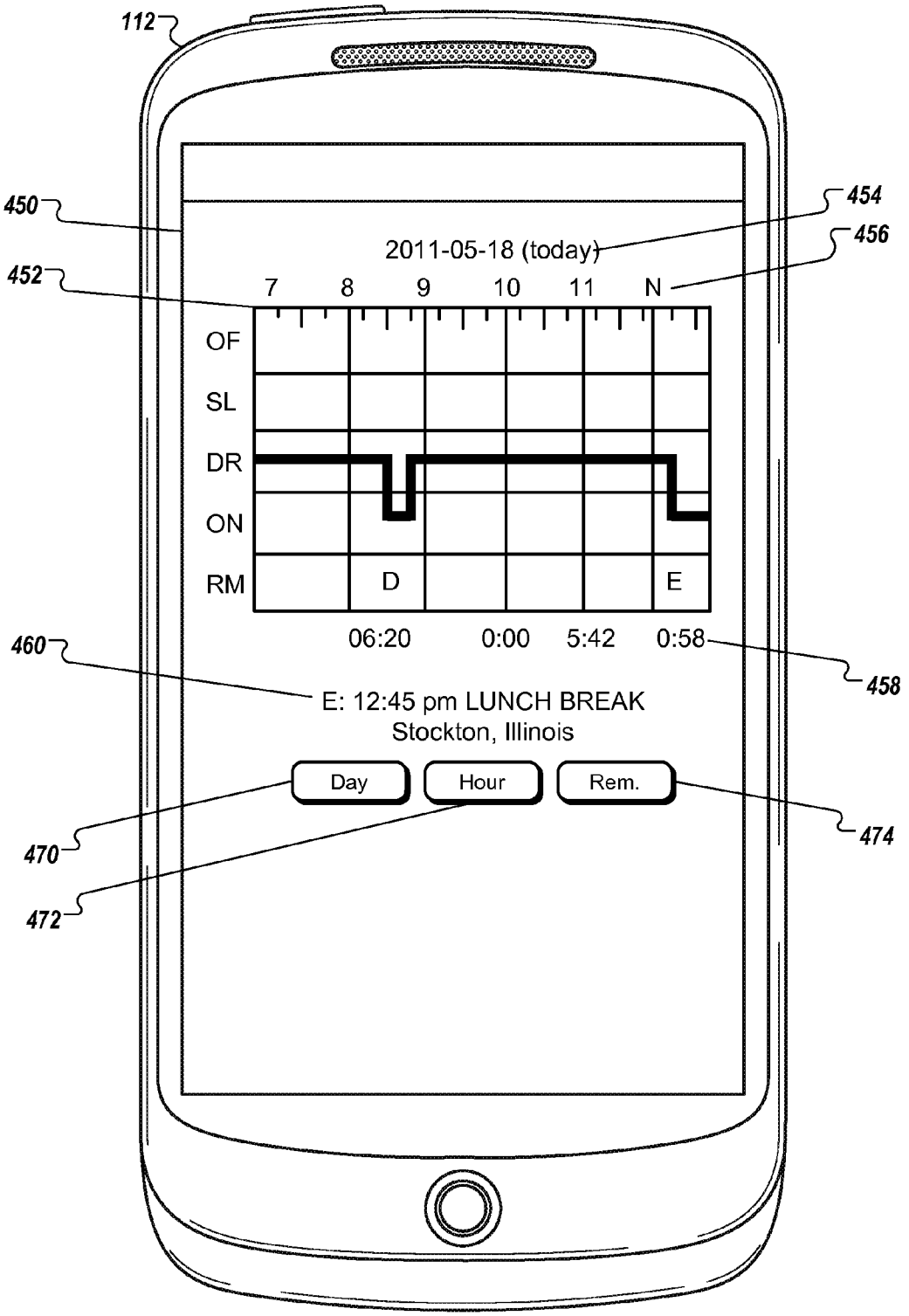
112
450
452
454
456
2011-05-18 (today)
7
8
9
10
11
N
OF
SL
DR
ON
RM
D
E
06:20
0:00
5:42
0:58
458
460
E: 12:45 pm LUNCH BREAK
Stockton, Illinois
Day
Hour
Rem.
470
472
474

FIG. 4B

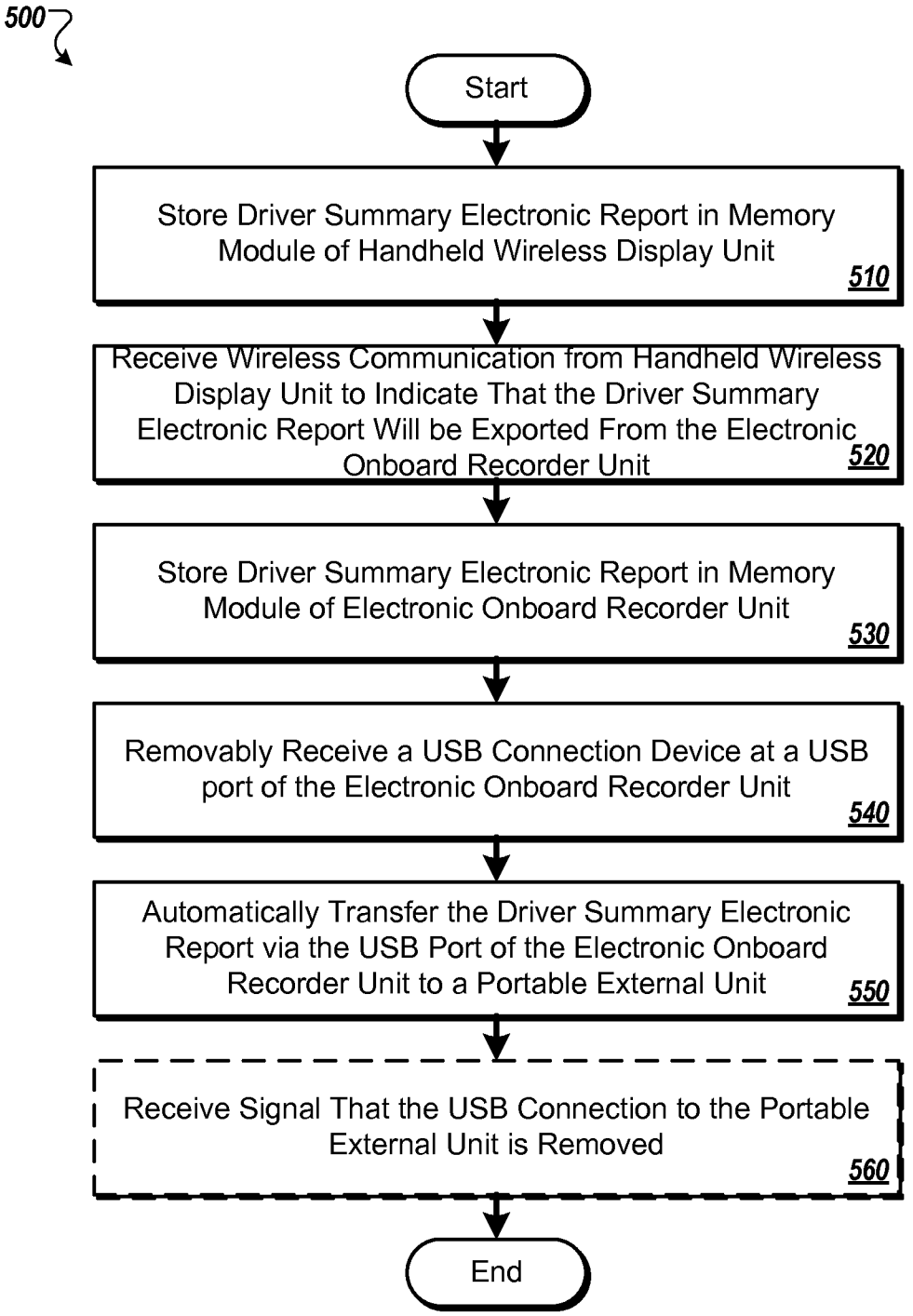
500
Start
Store Driver Summary Electronic Report in Memory Module of Handheld Wireless Display Unit
510
Receive Wireless Communication from Handheld Wireless Display Unit to Indicate That the Driver Summary Electronic Report Will be Exported From the Electronic Onboard Recorder Unit
520
Store Driver Summary Electronic Report in Memory Module of Electronic Onboard Recorder Unit
530
Removably Receive a USB Connection Device at a USB port of the Electronic Onboard Recorder Unit
540
Automatically Transfer the Driver Summary Electronic Report via the USB Port of the Electronic Onboard Recorder Unit to a Portable External Unit
550
Receive Signal That the USB Connection to the Portable External Unit is Removed
560
End

FIG. 5

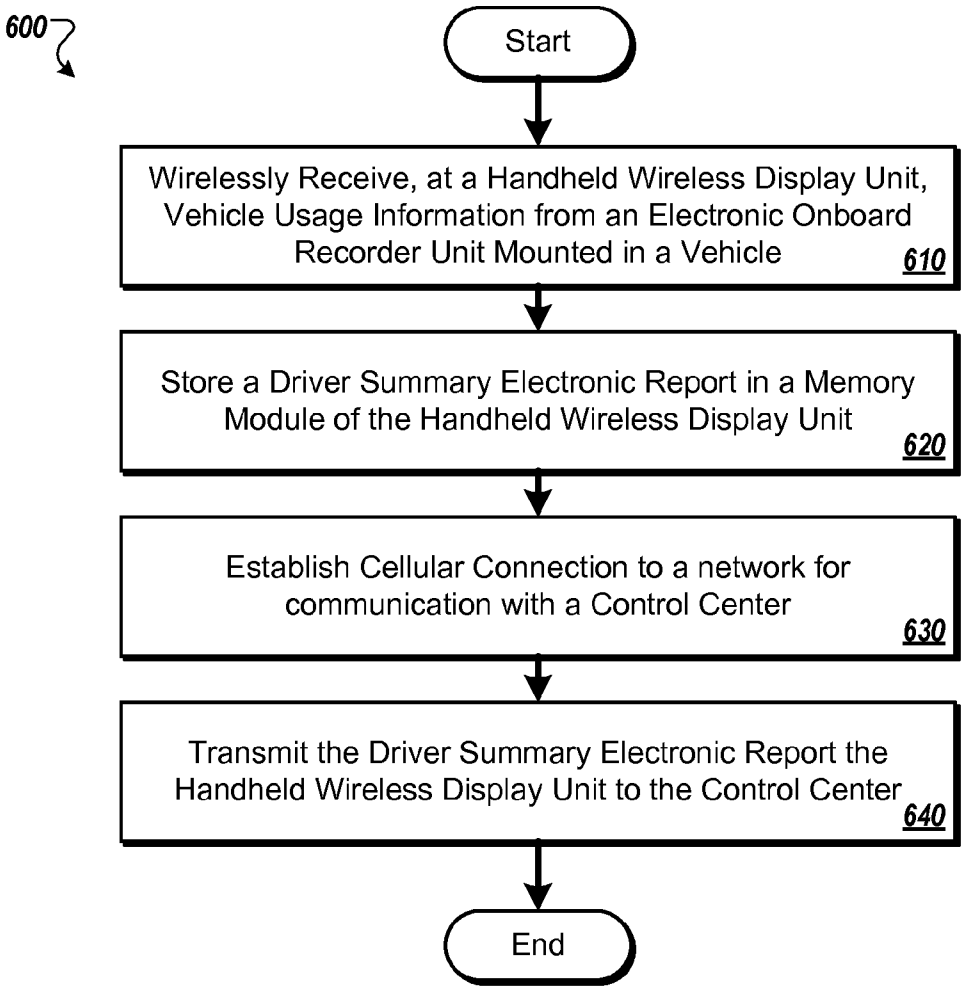
600
Start
Wirelessly Receive, at a Handheld Wireless Display Unit, Vehicle Usage Information from an Electronic Onboard Recorder Unit Mounted in a Vehicle
610
Store a Driver Summary Electronic Report in a Memory Module of the Handheld Wireless Display Unit
620
Establish Cellular Connection to a network for communication with a Control Center
630
Transmit the Driver Summary Electronic Report the Handheld Wireless Display Unit to the Control Center
640
End

FIG. 6

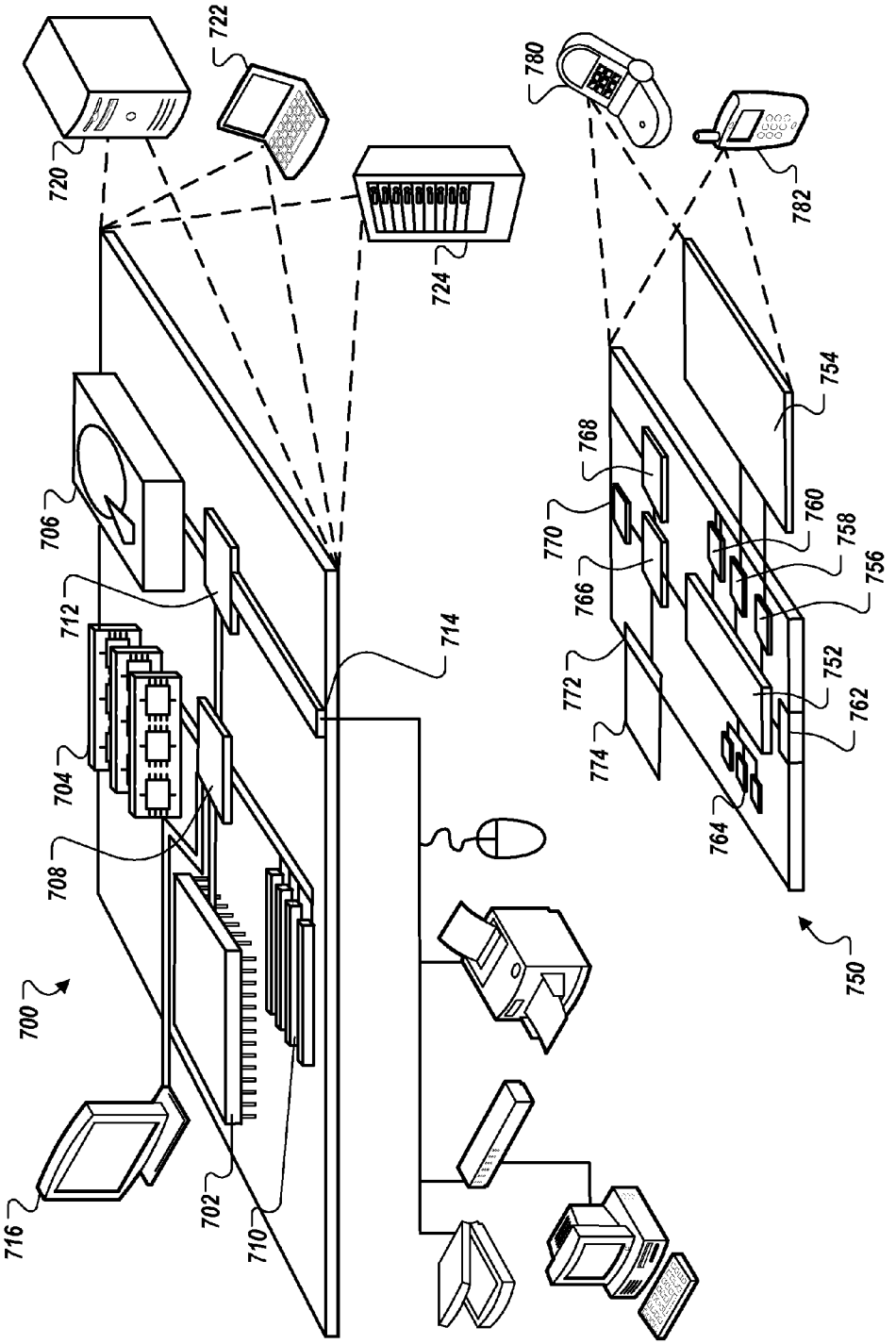
700
702
704
706
708
710
712
714
716
720
722
724
750
752
754
756
758
760
762
764
766
768
770
772
774
780
782

FIG. 7

FLEET VEHICLE MANAGEMENT SYSTEMS AND METHODS

TECHNICAL FIELD

This specification relates to transportation fleet management, such as a system for fleet vehicle management that records particular vehicle and driver information for subsequent communication, for example, to a remote device.

BACKGROUND

A number of commercial companies and government institutions maintain a fleet of vehicles and have an interest in keeping track of the vehicles and shipments, as well as the performance and well-being of their drivers. These parties frequently equip their fleet vehicles with devices configured to track the vehicles' geographic locations, speeds, headings, cargo temperature, engine performance parameters, and other data. Such information is used, for example, to maintain the vehicles, estimate delivery times, provide warning of possible damage to cargo, and to evaluate driver performance.

Some regulatory agencies also have an interest in fleet vehicle information, such as the number of miles a delivery vehicle has traveled since its last safety inspection, or the number of hours a driver has been on duty since he or she last rested. In some cases, this information was traditionally recorded on paper (e.g., driver log books) or in proprietary electronic formats. In either case, such information can be inconvenient to access or share with regulatory inspectors or other third parties.

SUMMARY

Some embodiments of a system for communicating fleet vehicle information can provide equipment for use inside a fleet vehicle to facilitate prompt and efficient transfer of vehicle and driver information. In particular embodiments, the system can generate electronic reports that provide driver identification information, hours of service information, and (optionally) vehicle-related information, and such electronic reports can be readily communicated to a remote computer device in a number of different manners. For example, in some embodiments, the system may include an electronic onboard recorder mountable in a vehicle and a mobile communication device (e.g., a cellular phone in particular embodiments) that is configured to provide short-range, two-way wireless communication (e.g., Bluetooth communication in particular embodiments) with the electronic onboard recorder. In such circumstances, a driver or other system user can operate the system to share a driver summary electronic report or other information by exporting the electronic information via a data port (e.g., a USB port in particular embodiments) of the electronic onboard recorder, by transferring the electronic information via a cellular link established by the mobile communication device, or both.

Particular embodiments described herein may include a system for communicating fleet vehicle information including an electronic onboard recorder unit and a portable wireless display unit. The electronic onboard recorder unit may be configured to mount inside a vehicle and provide a wired connection to the vehicle for gathering data during operation of the vehicle. The electronic onboard recorder unit can be free of any user interface display and may include a short-range wireless communication device to wirelessly communicate vehicle usage information to a separate device, such as the portable wireless display unit. The electronic onboard recorder unit may also include a data connection port (e.g., a USB port in some embodiments) configured to removably receive a data cable of a remote computer device. The portable wireless display unit may include a short-range wireless communication device to wirelessly communicate with the electronic onboard recorder unit when the electronic onboard recorder unit and the portable wireless display unit are both positioned inside the vehicle. Also, the portable wireless display unit may include a cellular communication device configured to provide a cellular communication link with a remote system. Furthermore, the portable wireless display unit may include a user interface comprising a display device. Also, the portable wireless display unit may include a computer-readable memory module to store a driver summary electronic report, which may be generated by the portable wireless display unit in response to wirelessly receiving the vehicle usage information from the electronic onboard recorder unit mounted to the vehicle. The driver summary electronic report may include identification information for a driver and hours or service information for the driver. In response to input on the user interface of the portable wireless display unit indicative of a request to export the driver summary electronic report from the electronic onboard recorder unit mounted to the vehicle, the portable wireless display unit may be configured to wirelessly transfer the driver summary electronic report to the electronic onboard recorder unit mounted to the vehicle for exporting the driver summary electronic report via the data connection port of the electronic onboard recorder unit to the remote computer device.

In some embodiments, a system for communicating fleet vehicle information may include an electronic onboard recorder unit configured to mount inside a vehicle and provide a wired connection to the vehicle for gathering data during operation of the vehicle. The electronic onboard recorder unit may be free of a user interface display. Also, the electronic onboard recorder unit may include a short-range wireless communication device to wirelessly communicate vehicle usage information to a second device when the second device is positioned inside the vehicle. The system may also include a portable wireless display unit having a short-range wireless communication device to wirelessly communicate with the electronic onboard recorder unit when the electronic onboard recorder unit and the portable wireless display unit are both positioned inside the vehicle. The portable wireless display unit may also include a long-range communication device configured to provide a cellular or satellite communication link with a remote system. The portable wireless display unit may further include a user interface comprising a display device that displays driver hours of service information in response to wirelessly receiving the vehicle usage information from the electronic onboard recorder unit mounted to the vehicle. The electronic onboard recorder unit and the portable wireless display unit may provide two-way wireless communication such that the portable wireless display unit wirelessly receives vehicle usage information from the electronic onboard recorder unit and the electronic onboard recorder unit wirelessly receives driver identification information from the portable wireless display unit.

In certain embodiments, a system for communicating fleet vehicle information may include an electronic onboard recorder unit configured to mount inside a vehicle and provide a wired connection to the vehicle for gathering data during operation of the vehicle. The electronic onboard recorder unit may include a short-range wireless communication device to wirelessly communicate vehicle usage information to a second device when the second device is positioned inside the vehicle. The electronic onboard recorder

unit may also include a USB connection port configured to removably receive a USB data cable of a remote computer device. The system may further include a portable wireless display unit comprising a short-range wireless communication device to wirelessly communicate with the electronic onboard recorder unit when the electronic onboard recorder unit and the portable wireless display unit are both positioned inside the vehicle. The portable wireless display unit may also include a long-range communication device configured to provide a cellular or satellite communication link with a remote system. The portable wireless display unit may also include a user interface including a display device, and a computer-readable memory module to store a driver summary electronic report including identification information for a driver and hours or service information for the driver. The electronic onboard recorder unit may output the driver summary electronic report via the USB connection port in response to user input on the user interface of the portable wireless display unit. Also, the portable wireless display unit may output the driver summary electronic report via the cellular or satellite communication link to the remote system.

Some embodiments described herein may include a computer-implemented method for providing a driver summary electronic report. The method may include wirelessly communicating vehicle usage information from an electronic onboard recorder unit mounted to a vehicle to a portable wireless display unit. The electronic onboard recorder unit may have a wired connection to the vehicle. The method may also include wirelessly receiving, at the electronic onboard recorder unit, a driver summary electronic report from the portable wireless display unit, the driver summary electronic report having been generated by the portable wireless display unit in response to the electronic onboard recorder unit wirelessly communicating the vehicle usage information. The driver summary electronic report may include identification information for a driver and hours or service information for the driver. The method may further include removably receiving a USB data cable in a USB connection port of the electronic onboard recorder unit mounted to the vehicle. Also, the method may include, in response to a user request input to the portable wireless display unit, transferring the driver summary electronic report from the electronic onboard recorder unit mounted to the vehicle via the data cable to a remote computer device.

In further embodiments, a computer-implemented method for providing a driver summary electronic report may include wirelessly receiving, at a portable wireless display unit, vehicle usage information from an electronic onboard recorder unit mounted to a vehicle and having a wired connection to the vehicle. The method may also include storing a driver summary electronic report in a computer-readable memory module of the portable wireless display unit configured to wirelessly communicate with the electronic onboard recorder unit mounted to the vehicle. The driver summary electronic report may be generated by the portable wireless display unit in response to wirelessly receiving the vehicle usage information from the electronic onboard recorder unit mounted to the vehicle. The driver summary electronic report may include identification information for a driver and hours or service information for the driver. The method may also include receiving user input on the portable wireless display unit indicative of a request to export the driver summary electronic report from the electronic onboard recorder unit mounted to the vehicle. The method may further include wirelessly transferring the driver summary electronic report from the portable wireless display unit to the electronic onboard recorder unit mounted to the vehicle for exporting the driver summary electronic report via a removable data cable to a remote computer device.

Some embodiments of a computer-implemented method for providing a driver summary electronic report may include wirelessly communicating vehicle usage information from an electronic onboard recorder unit mounted to a vehicle to a portable wireless display unit. The electronic onboard recorder unit may have a wired connection to the vehicle. The method may also include storing a driver summary electronic report in a computer-readable memory module of the portable wireless display unit configured to wirelessly communicate with the electronic onboard recorder unit mounted to the vehicle. The driver summary electronic report may generated by the portable wireless display unit in response to wirelessly receiving the vehicle usage information from the electronic onboard recorder unit mounted to the vehicle. The driver summary electronic report may include identification information for a driver and hours or service information for the driver. The method may further include receiving user input on the portable wireless display unit indicative of a request to export the driver summary electronic report from the electronic onboard recorder unit mounted to the vehicle. The method may also include wirelessly transferring the driver summary electronic report from the portable wireless display unit to the electronic onboard recorder unit mounted to the vehicle. The method may further include removably receiving a data cable in a corresponding port of the electronic onboard recorder unit mounted to the vehicle. Also, the method may include transferring the driver summary electronic report from the electronic onboard recorder unit mounted to the vehicle via the data cable to a remote computer device.

The systems and techniques described here may provide one or more of the following benefits. First, a system for communicating vehicle information can provide an electronic onboard recorder mountable in a vehicle and a mobile communication device (e.g., a cellular phone in particular embodiments) that is configured to provide wireless communication with the electronic onboard recorder. As such, system can include a plurality of separately housed devices that are each configured to output electronic reports in different manners.

Second, in some embodiments of the system, the electronic onboard recorder can be equipped with an external data port (e.g., a USB connection port) so that the electronic onboard recorder can output driver summary electronic reports or other electronic files via a hardwired connection to a remote computer. For example, a vehicle inspector can carry a portable computer device or portable storage device, and the driver or the inspector can plug the inspector's device into the data port of the electronic onboard recorder so as to retrieve a driver summary electronic report or other electronic files via a hardwired connection to the unit mounted in the vehicle.

Third, particular embodiments of the system can provide a mobile communication device (e.g., a cellular phone in particular embodiments) that provides short-range, two wireless communication with an electronic onboard recorder mounted in a vehicle. In such circumstances, not only does the electronic onboard recorder wirelessly communicate information to the mobile communication device, but the mobile communication device can also transmit information back to the electronic onboard recorder. Therefore, one or more electronic files containing vehicle or driver information can be synced between the two separate devices for purposes of outputting the files in a number of optional manners.

Fourth, in some embodiments, the electronic onboard recorder mounted in the vehicle can be constructed as a dis-

playless unit that is free of any user interface display. Such a construction can reduce the size of the electronic onboard recorder, provide for simplified installation (and, optionally, concealed installation inside the vehicle), and reduce the manufacturing complexities for the electronic onboard recorder. In these circumstances, the user interface of the mobile communication device can serve as the user interface for the system (including the electronic onboard recorder). As such, the mobile communication device can be separately housed from its corresponding electronic onboard recorder so that the mobile communication device can be carried by the vehicle driver or other user outside of the vehicle while the electronic onboard recorder remains mounted inside the vehicle. Moreover, because the mobile communication device is portable relative to its respective electronic onboard recorder unit, the driver can view or input vehicle or driver information on the user interface of the mobile communication device both when the driver is seated inside the vehicle and when the driver positioned outside the vehicle in proximity thereto (e.g., while inspecting the exterior of the vehicle, refueling, or sitting in a nearby building).

Fifth, in some embodiments of the system, the electronic onboard recorder can be configured to detect the particular type of communications protocol employed by vehicle, and automatically adapt to the detected protocol in order to communicate with an engine control module of the vehicle. As such, the electronic onboard recorder can be installed in any one of a number of different types of vehicles, and the installer's act of connecting the electronic onboard recorder to the vehicle's engine control module will prompt the control circuitry of the electronic onboard recorder to automatically recognize the type of vehicle in which it is installed.

Sixth, in some embodiments of the system, the electronic onboard recorder can house one or more accelerometers therein so as to detect particular types of vehicle movement, such as hard brakes, acceleration, and lane changes. Instances of this type of vehicle movement can be recorded by the electronic onboard recorder can communicated to a control center (e.g., via the mobile communication device) for purposes of safety monitoring by a fleet manager or other system user.

The details of one or more implementations are set forth in the accompanying drawings and the description below. Other features and advantages will be apparent from the description and drawings, and from the claims.

DESCRIPTION OF DRAWINGS

FIG. **1** is a diagram that shows an example of a fleet management system in accordance with some embodiments.

FIG. **2** is a diagram that shows an example of a system for communicating fleet vehicle information, in accordance with some embodiments.

FIG. **3** is a diagram that shows the system of FIG. **2** in combination with at least one external storage device, in accordance with some embodiments.

FIGS. **4**A-**4**B illustrate examples of a user interface for a mobile communication device of a system for communicating fleet vehicle information, in accordance with some embodiments.

FIG. **5** is flow chart that shows an example process for communicating an electronic report or other data from an electronic onboard recorder unit to an external storage device, in accordance with some embodiments.

FIG. **6** is flow chart that shows an example process for using a mobile communication device to transmit an electronic report or other data to a fleet management control center.

FIG. **7** is a diagram of computing devices that may be used to implement the systems and methods described herein, in accordance with some embodiments.

DETAILED DESCRIPTION OF ILLUSTRATIVE EMBODIMENTS

Referring to FIG. **1**, some embodiments of a fleet management system **100** can include a collection of vehicles **102***a*-**102***c* equipped with electronic onboard recorder units **106***a-c* and accompanying mobile communication devices **112***a-c*, which can be used for communication with a control center **104**. In particular embodiments, the control center **104** represents a physical or conceptual location in which information about the vehicles **102***a*-**102***c* (and the vehicles drivers) is collected and used. For example, the control center **104** may access information gathered from the vehicles **102***a*-**102***c* in order to identify and locate the vehicle **102***a*-**102***c* carrying particular shipments, and estimate the remaining time until delivery. Also, the control center **104** can collect the information about the vehicles **102***a*-**102***c* so as to monitor the location, speed, heading, and planned route of particular vehicles and their respective shipments. Moreover, the control center **104** can collect the information about the drivers of the vehicles **102***a*-**102***c* so as to monitor the duty status, hours of service, and other characteristics of each driver.

At least some of aforementioned vehicle information is gathered by the electronic onboard recorder units **106***a*-**106***c* mounted in each of the vehicles **102***a*-**102***c*, respectively. The electronic onboard recorder units **106***a*-**106***c* are electronic devices that collect and record information about the vehicles' **102***a*-**102***c*, location, speed, operational parameters, acceleration, operating hours, and other vehicle-related information. For example, the electronic onboard recorder units **106***a*-**106***c* can receive location information in the form of global positioning system (GPS) signals **108** from at least one GPS satellite **109** to determine the locations of their respective vehicles **102***a*-**102***c*. Also, the electronic onboard recorder units **106***a*-**106***c* can be configured to electrically connect with an engine control module (refer to FIG. **2**) so as to receive vehicle operation information (e.g., speed, operational parameters, acceleration/braking data, fuel usage, and the like). As described below in connection with FIGS. **2** and **3**, each electronic onboard recorder unit **106***a*-**106***c* can be equipped with a data connection port (e.g., a USB port in this embodiment) for purposes of readily exporting driver information electronic reports or other electronic data to remote devices of regulatory inspectors or other approved parties.

Still referring to FIG. **1**, each of the electronic onboard recorder units **106***a*-**106***c* can communicate with a corresponding mobile communication device **112***a*-**112***c*, which may also be positioned inside or in close proximity to the vehicle **102***a-c*. In particular, each of the mobile communication device **112***a*-**112***c* can be portably carried by the driver of a vehicle **102***a-c*, respectively, so that the mobile communication device **112***a*-**112***c* is configured to wirelessly communicate with the electronic onboard recorder unit **106***a*-**106***c*, respectively, mounted in the vehicle. For example, during use of the fleet vehicle **102***a*, the electronic onboard recorder unit **106***a* and the mobile communication device **112***a* can wirelessly communicate while both the unit **106***a* and the device **112***a* are positioned inside the vehicle **102***a*. In such circumstances, the electronic onboard recorder unit **106***a* and the

corresponding mobile communication device **112***a* can operate as a system **110***a* (FIGS. **2**-**3**) for communicating information about the vehicle **102***a* and its driver.

In this embodiment, the electronic onboard recorder unit **106***a* communicates with a mobile communication device **112***a* over a wireless link **114***a* and provides a user interface for the electronic onboard recorder unit **106***a*. Similarly, the electronic onboard recorder units **106***b* and **106***c* communicate with a mobile communication device **112***b* and **112***c*, respectively, over a wireless link **114***b* and **114***c*. In those embodiments in which the mobile communication device **112***a*-*c* provides the user interface for the respective electronic onboard recorder unit **106***a*-*c*, each electronic onboard recorder unit **106***a*-*c* can be constructed as a displayless unit that is free of any user interface display mounted thereto, thereby reducing the size of the electronic onboard recorder unit **106***a* (e.g., providing for simplified installation and, optionally, concealed installation inside the vehicle) and reducing the manufacturing complexities for the electronic onboard recorder unit **106***a*. In some implementations, the mobile communications devices **112***a*-**112***c* can be cellular telephones, satellite telephones, portable computers, tablet computers, personal digital assistants (PDAs), or another mobile computing device that is programmed to wirelessly communicate with one or more of the electronic onboard recorder units **106***a*-*c*. As such, each mobile communication device **112***a*-**112***c* can be separately housed from its corresponding electronic onboard recorder unit **106***a*-**106***c* so that the mobile communication device **112***a*-**112***c* can be carried by the vehicle driver or other user outside of the vehicle **102***a*-**102***c* while the electronic onboard recorder unit **106***a*-**106***c* remains mounted inside the vehicle **102***a*-**102***c*. In some implementations, the wireless links **114***a*-**114***c* can be short-range wireless communications links, such as Bluetooth, wireless Ethernet (WiFi), ZigBee, near-field communications (NFC), infrared (IrDA), or any other suitable short-range wireless communication link. In such circumstances, each mobile communication device **112***a*-**112***c* can display information in response to the vehicle data wirelessly communicated from the respective electronic onboard recorder unit **106***a*-**106***c* while both items are positioned inside the vehicle **102***a*-*c* (e.g., while the electronic onboard recorder unit **106***a* is mounted inside the vehicle **102***a* and the mobile communication device **112***a* is carried by the driver in the vehicle or otherwise temporarily placed inside the vehicle cabin). Moreover, because each mobile communication device **112***a*-**112***c* is portable relative to its respective electronic onboard recorder unit **106***a*-**106***c*, the driver or other human user can view or input vehicle-related information on the user interface of the mobile communication device **112***a*-**112***c* both when the driver is seated inside the vehicle and when the driver positioned outside the vehicle in proximity thereto (e.g., while inspecting the exterior of the vehicle, refueling, or sitting in a nearby building).

In use, each wireless link **114***a*-**114***c* transmits information between the respective electronic onboard recorder unit **106***a*-**106***c* and its corresponding mobile communication device **112***a*-**112***c*. In some implementations, the electronic onboard recorder units **106***a*-**106***c* do not provide their own user interfaces (e.g., displays, input buttons), but instead wirelessly communicate bi-directionally with the mobile communication devices **112***a*-**112***c* to provide user interface functions for the overall mobile system **110***a* (refer, for example, to FIG. **2**). For example, the electronic onboard recorder unit **106***a* may wirelessly communicate vehicle usage information so that the mobile communication device **112***a* can calculate and display hours of service information on the display screen carried by the driver. In another example, the electronic onboard recorder unit **106***a* may determine the location of the vehicle **102***a* and wirelessly communicate the location information to the mobile communication device **112***a* so that the mobile communication device **112***a* can display the location on a map. Example uses of the mobile communication devices **112***a*-**112***c* as user interfaces for the electronic onboard recorder units **106***a*-**106***c* are discussed further in the descriptions of FIGS. **2**-**5**.

In use, the mobile communication devices **112***a*-**112***c* may communicate with at least one transceiver **122** over a collection of wireless links **120***a*-**120***c*. In some implementations, the wireless links **120***a*-**120***c* can be long-range wireless links, such as cellular communication links, satellite communication links, WiMAX links, long term evolution (LTE) links, or any other suitable form of long-range wireless link that can communicate data between the mobile communication devices **112***a*-**112***c* and the transceiver **122**. In this particular embodiment, the transceiver **122** may be in the form a cellular antenna tower that is configured to provide cellular data links to a variety of cellular telephones within a particular geographic range. The transceiver **122** may be communicatively connected to a base station **124**. In some implementations, the base station **122** can be a cellular data communications provider, satellite communications provider, or any other appropriate wireless communications provider. Still referring to FIG. **1**, a network **130** communicatively connects the base station **124** with the control center **104**. In some embodiments, the network **130** may include the Internet or other public or private data networks. In alternative embodiments in which one or more of mobile communication devices **112***a*-**112***c* comprise a satellite phone, at least one of the long-range wireless links **120***a*-**120***c* can be a satellite communication link and the transceiver **122** may be in the form a satellite communication apparatus.

A mentioned previously, the control center **104** exchanges information with the electronic onboard recorder units **106***a*-**106***c* (via the mobile communication devices **112***a*-**112***c*) to monitor the status of the vehicles **102***a*-**102***c*. For example, the control center **104** may track the locations of the vehicles **102***a*-**102***c* in order to estimate delivery or pickup times, or to coordinate the dispatch of the vehicles **102***a*-**102***c* to pick up a delivery (e.g., by dispatching the vehicle **102***a*-**102***c* closest to the pickup location). In another example, the control center **104** may monitor the vehicles' **102***a*-**102***c* operating parameters to coordinate repairs or maintenance (e.g., monitor temperatures of refrigerated cargo, monitor engine warning signals).

Another form of information generated by the system for communication to the control center **4** are driver duty logs, which may include data indicative of the hours of service when the driver is on duty in a particular day. In some implementations, the driver duty logs can be automatically converted into electronic record of duty files (including hours of service records, driver identification information, etc.) that are readily exportable via the USB port of the electronic onboard recorder units **106***a*-**106***c* (FIG. **3**) or via the wireless link **120***a*-*c* of the mobile communication devices **112***a*-**112***c* (FIG. **2**).

For example, the electronic onboard recorder unit **106***a* can collect the vehicle usage information over a period of time when a particular driver is using the vehicle **102***a*, and the electronic onboard recorder unit **106***a* can periodically transfer this vehicle usage information to the corresponding mobile communication device **112***a* linked thereto via the Bluetooth connection **114***a*. The mobile communication device **112***a* can access the vehicle usage information along

with other driver-specific information (e.g., driver identification information and the like) so as to generate the electronic record of duty file stored on the memory of the mobile communication device **112***a*. From there, the electronic record of duty file can be wirelessly communicated via the cellular link **120***a* to the control center **104**, wirelessly communicated via the Bluetooth link **114***a* to the electronic onboard recorder unit **106***a* for subsequent exporting via the USB port to a remote device (refer to FIG. **3**), or both. Regarding the process for exporting via the USB port, the electronic onboard recorder unit **106***a* can be configured to output the electronic record of duty file directly to a temporarily connected external computer device **150** (e.g., a notebook computer) or a portable storage device **152** (e.g., a USB thumb drive, a portable hard drive) provided by a vehicle inspector **154** (e.g., a law enforcement official, a regulatory inspector, or the like). In such circumstances, the vehicle inspector **154** can conveniently plug the external computer device **150** or the portable storage device **152** into the USB port provided by the electronic onboard recorder unit **106***a* to facilitate a transfer of the requested data from the electronic onboard recorder unit **106***a*. Thus, the electronic onboard recorder unit **106***a* and the mobile communication device **112** are two separately housed instruments that act together as a system to generate and communicate the electronic record of duty file associated with the driver.

Referring now to FIG. **2**, in some embodiments of the system **110***a* for communicating fleet vehicle information, the electronic onboard recorder unit **106***a* is mounted in the vehicle **102***a* so that the electronic onboard recorder unit **106***a* is electrically connected to the vehicle **102***a*. In particular, the electronic onboard recorder unit **106***a* can include as input cable (e.g., data bus **204**) that electrically connects to a mating connector of an engine control module (ECM) **202** of the vehicle **102***a*. In some implementations, the ECM **202** is an electronic device that monitors and/or controls various functions of the vehicle **102***a*. For example, the ECM **202** can monitor vehicle speed, engine speed, coolant temperature, vehicle mileage, cargo environmental parameters, and any other appropriate vehicle parameters. In this embodiment, the electronic onboard recorder unit **106***a* is configured to mount directly to a dash component inside the cabin of the vehicle **102***a*. As previously described, the electronic onboard recorder unit **106***a* can be a displayless unit that is without any user interface display screen, thereby reducing the size of the unit **106***a* and facilitating a simplified installation process. The user interface **208** of the mobile communication device **112***a* can be used as a portable user interface for the electronic onboard recorder unit **106***a* when the unit **106***a* communicates with the mobile communication device **112***a* over the Bluetooth connection **114***a*. Moreover, in some implementations, the electronic onboard recorder unit **106***a* may include a single printed circuit board upon which all of its electronic circuitry is mounted, thereby further reducing the size and manufacturing complexities of the unit **106***a*. It should be understood from the description herein that the electronic onboard recorder unit **106***a* is depicted as an enlarged size in FIGS. **2-3** for purposes of illustration only, and that the actual size of the electronic onboard recorder unit **106***a* may be significantly smaller. For example, in some embodiments, the electronic onboard recorder unit **106***a* has a maximum length of about 8 inches, a maximum width of about 6.5 inches, and a maximum height of about 1.5 inches.

In some implementations, the electronic onboard recorder unit **106***a* can detect the particular type of communications protocol employed by the ECM **202**, and automatically adapt to the detected protocol in order to communicate with the ECM **202**. In these circumstances, the electronic onboard recorder **106***a* can be installed in any one of a number of different types of vehicles (e.g., a class 8 large truck, a class 1 car, or the like), and the installer's act of connecting the cable **204** to the vehicle's ECM **202** will prompt the control circuitry of the electronic onboard recorder unit **106***a* to automatically recognize the type of vehicle in which it is installed. As such, some embodiments of the electronic onboard recorder unit **106***a* need not be manufactured or preprogrammed in a vehicle-specific manner. For example, in some implementations, the ECM **202** can implement a controller area network (CAN), a local interconnect network (LIN), a vehicle area network (VAN), FlexRay, J1939, ISO-11783, domestic digital bus (D2B), IDB-1394, SmartWireX, MOST, J1850, ISO-9141, J1708, J1587, SPI, IIC, or any other communications protocol for communicating with the electronic onboard recorder unit **106***a* through the data bus **204**. In such circumstances, the electronic onboard recorder unit **106***a* may detect the combination and/or signal levels implemented over the data bus **204**, may analyze incoming data traffic, and/or may query the ECM **202** using various protocols and receive corresponding responses in order to determine the protocol in use by the ECM **202**. In some implementations, the connector on the end of the data bus cable **204** (e.g., the end which connects to the ECM **202**) can include a connection jack having more data lines than are provided by the ECM **202**. Multiple converters may be provided to adapt a subset of the port's data lines to a variety of configurations of the data bus **204**. For example, passenger cars and other "class 1" vehicles may provide a connector that is compliant with the on-board diagnostic (OBD) II specification, while large trucks and other "class 8" vehicles may provide a connector that is compliant with the heavy-duty OBD (HDOBD) specification. In such examples, one converter may be provided to adapt the port to connect to OBDII data buses, and another may be provided to adapt the port to connect to HDOBD data buses. The electronic onboard recorder unit **106***a* may sense the configuration of an attached converter to determine the appropriate protocol to use for communication with the ECM **202**.

In some embodiments, the electronic onboard recorder unit **106***a* can be configured to simultaneously communicate via multiple protocols at once. For instance, the electronic onboard recorder unit **106***a* can be configured to communicate via the J1939 and J1708 protocols at the same time. This feature can be useful, for example, for a vehicle in which the ECM **202** communicates in two different protocols (e.g., communicates some information (braking information) on one engine bus and other information (e.g., fuel information) on another engine bus. Also, this feature can be useful when a single vehicle includes multiple ECMs **202** that employed different protocols. Thus, the electronic onboard recorder unit **106***a* can to gather some vehicle information appears on one engine bus, and to gather other vehicle information on another engine bus. In one implementation, the cable **204** can have a first set of wires that are configured to connect with a first ECM (or a first engine bus of an individual ECM) while a second set of wires are configured to mate with a second ECM (or a second engine bus of the individual ECM).

Furthermore, in particular embodiments in which the ECM **202** or engine bus **204** may not provide a direct odometer reading, the electronic onboard recorder unit **106***a* can be configured to interpret other engine parameters to create an "effective odometer reading" of the vehicle **102***a* starting at the point when the electronic onboard recorder unit **106***a* was installed in the vehicle **102***a*. For example, the electronic onboard recorder unit **106***a* can receive data indicative of

vehicle speed (e.g., used in combination with an internal clock or timer of the electronic onboard recorder unit **106***a*) or data indicative of distance increments (e.g., distance pulses every 0.1 miles) so as to generate "effective odometer reading" for the vehicle **102***a*. Accordingly, the system **110***a* can be used to comply with distance and odometer reporting requirements (via an electronic report) even if the ECM **202** or engine bus **204** of the vehicle **102***a* does not directly provide odometer readings. In addition, the system **110***a* can prompt an installer or other user to manually input the vehicle odometer reading (as shown on the dash of the vehicle) when the electronic onboard recorder unit **106***a* is initially installed so that the "effective odometer reading" calculated by the system **110** is a substantially accurate estimation of the actual total mileage of the vehicle **102***a*.

As described previously, the electronic onboard recorder unit **106***a* receives location information in the form of global positioning system (GPS) signals **108** from at least one GPS satellite **109** to determine the location of the vehicle **102***a*. For example, the electronic onboard recorder unit **106***a* can be equipped with a GPS receiver device that receives signals from the GPS satellite **109** so that the electronic onboard recorder unit **106***a* can receive coordinate information (e.g., longitude and latitude coordinates) and time information (e.g., current time). In addition, in some embodiments, the electronic onboard recorder unit **106***a* can be equipped with one or more accelerometers **203** so as to detect particular types of vehicle movement, such as hard brakes, acceleration, and lane changes. Instances of this type of vehicle movement can be recorded by the electronic onboard recorder unit **106***a* can communicated to the control center **104** (via the mobile communication device **112***a*) for purposes of safety monitoring by a fleet manager or other system user. Thus, during operation of the vehicle, some embodiments of the electronic onboard recorder unit **106***a* can receive input information from a combination of the ECM **202** of the vehicle **102***a*, the GPS system, and the one or more internal accelerometers **203**.

Still referring to FIG. **2**, the electronic onboard recorder unit **106***a* collects information from the various inputs (e.g., the ECM **202**, the GPS system, and the one or more accelerometers **203**) and stores the vehicle usage information as data in a computer-readable memory module **206**. As previously described, in this embodiment, the electronic onboard recorder unit **106***a* is displayless and thus has no user interface of its own with which to let a user view or interact with the vehicle usage information. Rather, in this embodiment, the electronic onboard recorder unit **106***a* communicates the vehicle usage information from the memory module **206** to the mobile communication device **112***a* over the Bluetooth connection **114***a*, and the vehicle usage information can be stored in a computer-readable memory module **116** of the mobile communication device **112***a*. The mobile communications device **112***a* provides a user interface **208** with which the user can access some or all the vehicle usage information. Examples of user interfaces are discussed in further detail in the descriptions of FIGS. **4**A and **4**B.

In addition to displaying some or all of the vehicle usage information on the mobile communication device **112***a*, the vehicle usage information may also be transmitted to the control center **104** for review and archiving. For example, in this embodiment, the mobile communication device **112***a* can communicate with the transceiver **122** over the cellular link **120***a* so as to wirelessly communicate the vehicle usage information and other electronic reports, messages, or data to the control center **104**. As such, the electronic onboard recorder unit **106***a* and the mobile communication device **112***a* operate as a system **110***a* that is positionable inside the vehicle **102***a* and that communicates information related to the vehicle and its driver. Moreover, at least the display portion (e.g., the mobile communication device **112***a*) of the system **110***a* can be portable relative to the electronic onboard recorder unit **106***a* and the vehicle **102***a*, thereby permitting the user to view and input vehicle or driver-related information even when the user is positioned outside the vehicle. Further, because each mobile communication device **112***a-c* is portable relative to the vehicles **102***a-c* (FIG. **1**) and the electronic onboard recorder units **106***a-c* (FIG. **1**), each mobile communication device **112***a-c* can be configured to wirelessly communicate with any one of the nearby electronic onboard recorder units **106***a-c*. For example, if the driver carrying the mobile communication device **112***a* switches to vehicle **102***b* (FIG. **1**) for a new workday, the driver's mobile communication device **112***a* can be configured to wirelessly communicate with the electronic onboard recorder unit **106***b* (FIG. **1**) mounted inside that vehicle **102***b* for the workday.

Referring now to FIG. **3**, each of electronic onboard recorder units **106***a-c* can be equipped with an external data port (e.g., a USB port in this embodiment) for exporting electronic reports or other data to a temporarily connected external storage device, such as the portable computer device **150**, the portable storage device **152**, or the like. As described previously, the electronic onboard recorder unit **106***a* includes the memory module **206** for the vehicle usage information and other data, and the mobile communication device **112***a* can receive the vehicle usage information and generate electronic reports (such as an electronic record of duty file). In some implementations, the electronic record of duty file stored in the memory module **116** of the mobile communication device **112***a* may be copied to the electronic onboard recorder unit **106***a* (e.g., via the wireless link **114***a*) for subsequent access by a third party such as the vehicle inspector **154**. For example, under some jurisdictions law enforcement or regulatory inspectors may be authorized to request a copy of the data **206** in order to inspect the driver's record of duty to determine whether the driver is in compliance with laws that regulate the number of consecutive or cumulative hours the driver is permitted to be on duty in a given period. Thus, in some circumstances, the electronic record of duty file can be generated by and stored in the mobile communication device **112***a*, and this electronic report can be wirelessly communicated to the electronic onboard recorder unit **106***a* prior to exporting the electronic record of duty file via the output data port **302** of the electronic onboard recorder unit **106***a*. In some embodiments in which a copy of the electronic record of duty file is stored in both the mobile communication device **112***a* and the electronic onboard recorder unit **106***a*, and the copies of these files can be updated or sync prior to exporting the electronic record of duty file via the output data port **302** of the electronic onboard recorder unit **106***a*.

In the illustrated example, the vehicle inspector **154** can request that a copy of the data **206** be copied to the inspector's computer device **150** or the inspector's portable storage device **152**. To facilitate communication between the electronic onboard recorder unit **106***a* and the computer device **150** of the portable storage device **152**, the computer device **150** or the portable storage device **152** can be plugged into the data output port **302** of the electronic onboard recorder unit **106***a*. As previously described, the data output port **302** may be a USB port adapted to accept a USB connector **304** provided by any of the computer device **150** and the portable storage device **152**.

Still referring to FIG. **3**, in some embodiments, the mobile communication device **112***a* can control the transfer of the

electronic record of duty file or other data from the electronic onboard recorder unit **106***a* to the inspector's computer device **150** or the inspector's portable storage device **152**. For example, the electronic record of duty file or other data stored on the electronic onboard recorder unit **106***a* may be protected from exporting via the data port **302** until the user provides approval for the data transfer via the user interface **208** of the mobile communication device **112***a*. In such circumstances, the data stored on the electronic onboard recorder unit **106***a* may be protected from unauthorized users, and furthermore, the data files stored on the electronic onboard recorder unit **106***a* may be updated or synced with the data files stored on the mobile communication device **112***a* prior to any file exporting operation via the data port **302**. In this embodiment, the mobile communication device **112***a* presents the user interface **208** that prompts the user to initiate the file transfer process from the electronic onboard recorder unit **106***a* to the inspector's computer device **150** or the inspector's portable storage device **152**. The user interface **208** of the mobile communication device **112***a* can provide, for example, at least one control button **306** that receives the user input indicative of a command to initiate the file transfer process. In some implementations, the user control button **306** can be a physical button, a touchscreen button, a selectable menu item, or any other user control mechanism on the mobile communication device **112***a*. In other implementations, the control button **306** can be replacement with an input to detect a user gesture, a spoken command (e.g., speech recognition), or any other appropriate user action that the mobile communication device **112***a* can detect as a user command.

In response to activation of the user control button **306**, the system **110***a* initiates a process in which the electronic record of duty file or other data file is at least partially transferred to the electronic onboard recorder unit **106***a* for purposes of storing a copy of the file at the electronic onboard recorder unit **106***a* or otherwise updating an older version of the file stored at the electronic onboard recorder unit **106***a*. After the current version of the electronic record of duty file or other data file is stored at both the mobile communication device **112***a* and the electronic onboard recorder unit **106***a*, the electronic record of duty file or other data file can be exported via the data port **302** of the electronic record of duty file or other data file. The operation for transferring the electronic record of duty file or other data file to the computer device **150** or to the portable storage device **152** can be an automatic process that requires no further user input on the mobile communication device **112***a* and the electronic onboard recorder unit **106***a*. For example, after the initial user input on the control button **306** of the user interface **208**, the electronic record of duty file or other data file will be automatically transferred via the data port **302** upon a proper connection with the computer device **150** or to the portable storage device **152**. As such, the driver or the inspector **154** can plug the inspector's device **150** or **152** into the communication port **302** either before or after the driver activates the user control button **306**, in which case a copy of the electronic record of duty file from the electronic onboard recorder unit **106***a* is transferred via the data port **302** to the inspector's device **150** or **152**. When finished, the inspector's device **150** or **152**, with the electronic record of duty file or other data file stored in the memory thereof, can then be disconnected from the communications port **302** and used by the vehicle inspector **154**.

Referring now to FIGS. **4**A-B, the mobile communication device **112** can provide the user interface for the electronic onboard recorder unit **106** (FIGS. **2**-**3**) and can be configured to display a variety of vehicle and driver-related information in response to wirelessly receiving vehicle usage information from the electronic onboard recorder unit **106**. For example, as shown in FIG. **4**A, the mobile communication device **112** that presents an example user interface screen **402** that summarizes the driver duty information for display during operation of the vehicle. In some implementations, the mobile communication device **112** can be any one of the mobile communication devices **112***a*-**112***c* depicted in FIG. **1**, and the user interface screen **402** can be accessed from a menu selection on the user interface **208** as depicted in FIGS. **2**-**3**.

In this embodiment, the user interface **402** includes a driver name display area **404** which displays the name of the driver or other identification information associated with driver. Such driver identification information can be input into the mobile communication device **112** or selected from a list displayed by the mobile communication device **112**, and the driver identification information can be used in generating the aforementioned electronic record of duty file.

Still referring to FIG. **4**A, a collection of status indicators **406***a*-**406***d* provides visual indications of several operational parameters of the mobile communication device **112** and/or an associated electronic onboard recorder unit (e.g., the electronic onboard recorder units **106***a*-**106***c*). For example, the status indicator **406***a* can display a visual indication of whether the mobile communication device **112** is connected to the transceiver **122** of FIG. **1** by one of the communication links **120***a*-**120***c*. The status indicator **406***b* can display a visual indication of whether the mobile communication device **112** is connected to its associated electronic onboard recorder unit **106***a*-*c* by one of the Bluetooth connections **114***a*-**114***c*. The status indicator **406***c* can display a visual indication of whether the mobile communication device **112** is receiving the GPS signals **108** form the GPS satellites **110**. The status indicator **406***d* can display a visual indication of whether the mobile communication device **112** is connected to an associated ECM, such when the electronic onboard recorder unit **106***a* is connected to the ECM **206** of FIG. **2** by the data bus **204**.

In some embodiments, a download button **408** is provided by the user interface **402** to accept user input indicative of a command to initiate a transfer of data from the associated electronic onboard recorder **106** (FIG. **3**) unit to an external storage device, such as the computer device **150** or the portable storage device **152** as described previously discussed in the description of FIG. **3**. Accordingly, the download button **408** can initiate a set of operations in which particular data files stored on the mobile communication device **112** are copied to the electronic onboard recorder **106** or otherwise used to update with similar files previously stored on electronic onboard recorder **106**. From there, the one or more data files can be exported via the data port **302** as previously described in connection with FIG. **3**. As such, the download button **408** may operate similarly to the previously described control button **306** (FIG. **3**).

In addition, the user interface **402** provides a number of inputs for the driver to alter his or her duty status, thereby affecting the driver's hours of service and the aforementioned electronic record of duty file. For example, the driver may interact with a user control **410***a* to indicate that he or she is in an "off duty" status. The driver can interact with a user control **410***b* to indicate that he or she is in a "sleeper berth" status (e.g., the driver is resting in a sleeper unit associated with his vehicle). The driver can interact with a user control **410***c* to indicate that he or she is operating his vehicle. The driver can interact with a user control **410***d* to indicate that he or she is in an "on duty" status even when he or she is not driving the vehicle (e.g., inspecting the vehicle or performing other on-

duty tasks). In some implementations, the user controls **410***a*-**410***d* can change their visual appearance to indicate the status currently selected by the driver. For example, the user control **410***a* may be displayed with a brighter color than the user controls **410***b*-**410***d* when the driver is in an "off duty" status.

Still referring to FIG. **4**A, the interface **402** of the mobile communication device **112** can also display indicators related to the driver's hours of service. For example, an indicator **412** displays the amount of time the driver has left before he or she is in violation of a predetermined drive time limit. An indicator **414** displays the amount of time the driver has left before he or she is in violation of a predetermined on duty time limit. An indicator **416** displays the consecutive amount of time the driver has been off duty.

Furthermore, an indicator **420** displays the amount of drive time the driver has accrued in a given day, which (in this embodiment) has an upper limit of "11 hours" of total drive time before he or she is in violation of a predetermined drive time limit. Thus, the time values in indicators **412** and **420** will add up to the maximum drive time limit ("11 hours" in this embodiment). When the driver's total drive time in indicator **420** exceeds the upper limit, the indicator may change colors, for example, to a red color to warn the driver of the violation. Optionally, an indicator **422** displays the amount of on-duty time the driver has accrued in a given day, which (in this embodiment) has an upper limit of "14 hours" of total on-duty time before he or she is in violation of a predetermined on-duty time limit. Thus, the time values in indicators **422** and **414** will add up to the maximum on-duty time limit ("14 hours" in this embodiment). When the driver's total drive time in indicator **422** exceeds the upper limit, the indicator may change colors, for example, to a red color to warn the driver of the violation. Further, an indicator **424** displays the amount of total on-duty time the driver has accrued in a period of consecutive days (e.g., "8 days" in this embodiments). For example, the total on-duty time the driver has accrued in an eight-day period may have an upper limit of "70 hours" in this embodiment. When the driver's total drive time in indicator **424** exceeds the upper limit, the indicator may change colors, for example, to a red color to warn the driver of the violation.

As shown in FIG. **4**B, the mobile communication device **112** can provide another user interface screen **450** that depicts a summary of the driver's duty log. In some embodiments, the summary information provided in this user interface screen **450** can be employed in the electronic record of duty file that is generated by the mobile communication device **112** for purposes of sharing with the aforementioned inspector **154** (FIG. **3**). In some implementations, the user interface screen **450** can be accessed from a menu selection on the user interface **208** as depicted in FIGS. **2**-**3**.

The user interface **450** in this embodiment includes an electronic duty log in the form of a time chart **452**. The chart **452** provides a convenient visualization of the driver's status (e.g., on duty, off duty, driving, sleeper berth) over a selected period of time. A date indicator area **454** displays the date associated with the information presented by the chart **452**. A time indicator area **456** displays the times associated with the information presented by the chart **452**. A time interval area **458** displays the elapsed time durations associated with the various statuses presented by the chart **452**.

A status area **460** displays the driver's current status or the status presented by the chart **452**. In some implementations, the status area **460** can include time information, status information, location information, a remark, and (optionally) the driver's name or other identification information. In some implementations, the remark can be selected from a collection of predefined remarks (e.g., "fueling", "breakdown", "loading", "unloading"). In some implementations, the remark can be entered by the driver. For example, the driver may need to enter a remark that is not described by a predefined remark (e.g., "helping a motorist").

The driver can interact with a user control **470** to cause the chart **452** to display the duty status over a period of one day or other predetermined time interval of data on the chart **452**. The driver can interact with a user control **472** to cause the chart **452** to display a one hour or other predetermined time interval of data on the chart **452**. The driver can interact with a user control **474** to cause the user interface **450** to present additional user controls that the driver can use to enter remark information that can be associated with one or more of the driver's statuses.

Referring now to FIG. **5**, some embodiments for a process **500** can be performed to transferring an electronic report from an electronic onboard recorder unit (such as unit **106***a* depicted in FIG. **3**) to an external computer or storage device (such as the inspector's device **150** or **152** depicted in FIG. **3**). The process **500** may include an operation **510** in which a driver summary electronic report (e.g., an electronic record of duty file) in memory module of a handheld wireless display unit (e.g., the mobile communication device **112***a* depicted in FIG. **3**). For example, the electronic onboard recorder unit **106***a* can collect the vehicle usage information over a period of time when a particular driver is using the vehicle **102***a*, and the electronic onboard recorder unit **106***a* can periodically transfer this vehicle usage information to the corresponding mobile communication device **112***a* linked thereto via the Bluetooth connection **114***a*. The mobile communication device **112***a* can access the vehicle usage information along with other driver-specific information (e.g., driver identification information and the like) so as to generate the electronic record of duty file for storing on the memory of the mobile communication device **112***a*.

The process **500** may also include an operation **520** in which a wireless communication from the handheld wireless display unit (e.g., the mobile communication device **112***a* in this embodiment) is received to indicate that the driver summary electronic report (e.g., the electronic record of duty file in this embodiment) is approved for exporting from the electronic onboard recorder unit. For example, the driver can activate the user control button **306** as depicted FIG. **3** so that the mobile communication device **112***a* can prepare the electronic onboard recorder unit **106***a* for exporting the driver summary electronic report (e.g., the electronic record of duty file in this embodiment).

At operation **530** in the process **500**, the driver summary electronic report is also stored in a memory module of an electronic onboard recorder unit, which is wirelessly linked to the handheld wireless display unit. For example, the driver summary electronic report (e.g., the electronic record of duty file in this embodiment) can be wirelessly communicated via the Bluetooth link **114***a* from the mobile communication device **112***a* to the electronic onboard recorder unit **106***a*. This operation **530** may be performed in response to operation **520**. It should be understood from the description herein that the process **500** can be achieved by performing operation **530** either before or after the operation **520**. If operation **530** is performed before operation **520**, then operation **520** may cause the mobile communication device **112***a* to update the driver summary electronic report (e.g., the electronic record of duty file in this embodiment) stored on the electronic onboard recorder unit **106***a* with a more recent version of the file.

At operation **540**, the electronic onboard recorder unit removably receives a USB connection device at a USB port arranged along the housing of the electronic onboard recorder unit. For example, as previously described in connection with FIG. **3**, the electronic onboard recorder unit **106***a* can be equipped with a USB port **302** that is configured to removably receive the USB connector **304** from an inspector's portable computer **150** or portable storage device **152**. In such circumstances, the vehicle inspector **154** can conveniently plug the external computer device **150** or the portable storage device **152** into the USB port **302** provided by the electronic onboard recorder unit **106***a* to facilitate a transfer of the requested data from the electronic onboard recorder unit **106***a*.

The process **500** may also include operation **550** in which the driver summary electronic report (e.g., the electronic record of duty file in this embodiment) is automatically transferred to via the USB port of the electronic onboard recorder unit to a portable external unit. For example, in response to the user input at operation **520** and the receipt of the USB connection device at operation **540**, the electronic record of duty file may automatically transferred via the USB port **302** the inspectors device **150** or device **152** without any further user input at the electronic onboard recorder unit **106***a* or its corresponding mobile communication device **112***a*. As such, the electronic onboard recorder unit **106***a* can be configured to output the electronic record of duty file directly to a temporarily connected external computer device **150** (e.g., a notebook computer) or a portable storage device **152** (e.g., a USB thumb drive, a portable hard drive) provided by a vehicle inspector **154** (e.g., a law enforcement official, a regulatory inspector, or the like).

The process **500** may optionally include operation **560** in which a signal is automatically received by the electronic onboard recorder unit indicating that the USB connection to the portable external unit is removed. For example, the USB connection device **304** (FIG. **3**) can be removed from the electronic onboard recorder unit **106***a*. When a USB device (sometimes referred to as a slave) is connected to or disconnected from a USB host (e.g., the electronic onboard recorder unit **106***a* in this embodiment), there is a change on these USB data lines. It is this change that the USB host can use to automatically detect that a device has been connected or removed.

Referring now to FIG. **6**, some embodiments of a process **600** can be performed to communicate a driver summary electronic report via a cellular link established by a handheld wireless display unit (e.g., the mobile communication device **112***a* depicted in FIG. **3**). The process **600** may include an operation **610** in which vehicle usage information is wirelessly received at the handheld wireless display unit from an electronic onboard recorder unit mounted in a vehicle. For example, the electronic onboard recorder unit **106***a* can collect the vehicle usage information over a period of time when a particular driver is using the vehicle **102***a*, and the electronic onboard recorder unit **106***a* can periodically transfer this vehicle usage information to the corresponding mobile communication device **112***a* linked thereto via the Bluetooth connection **114***a*.

In operation **620**, a driver summary electronic report (e.g., the electronic record of duty file in this embodiment) is stored in a memory module of a handheld wireless display unit, which is in wireless communication with the electronic onboard recorder unit. For example, the mobile communication device **112***a* can access the vehicle usage information along with other driver-specific information (e.g., driver identification information and the like) so as to generate the electronic record of duty file for storing on the memory of the mobile communication device **112***a*.

The process may also include operation **630** in which a cellular connection is established to a network for communication between the handheld wireless display unit and a control center. For example, the mobile communication device **112***a* can establish the wireless connection **120***a* with the transceiver **122**, which is in communication with the control center **104** through the base station **124** and the network **130**.

In operation step **640**, the driver summary electronic report (e.g., the electronic record of duty file in this embodiment) is transmitted from handheld wireless display unit to the control center. For example, the electronic report and other data related to the driver or vehicle, which is stored on the mobile communication device **112***a*, can be communication via the cellular link **120***a* to the network **130** and to the control center **104** for review and archival purposes. Thus, in some embodiments, the electronic onboard recorder unit **106***a* and the corresponding mobile communication device **112***a* can each individually operate to output the driver summary electronic report.

FIG. **7** is a block diagram of computing devices **700**, **750** that may be used to implement the systems and methods described in this document, either as a client or as a server or plurality of servers. Computing device **700** is intended to represent various forms of digital computers, such as laptops, desktops, workstations, personal digital assistants, servers, blade servers, mainframes, and other appropriate computers. Computing device **750** is intended to represent various forms of mobile devices, such as personal digital assistants, cellular telephones, smartphones, and other similar computing devices. The components shown here, their connections and relationships, and their functions, are meant to be exemplary only, and are not meant to limit implementations of the inventions described and/or claimed in this document.

Computing device **700** includes a processor **702**, memory **704**, a storage device **706**, a high-speed interface **708** connecting to memory **704** and high-speed expansion ports **710**, and a low speed interface **712** connecting to low speed bus **714** and storage device **706**. Each of the components **702**, **704**, **706**, **708**, **710**, and **712**, are interconnected using various busses, and may be mounted on a common motherboard or in other manners as appropriate. The processor **702** can process instructions for execution within the computing device **700**, including instructions stored in the memory **704** or on the storage device **706** to display graphical information for a GUI on an external input/output device, such as display **716** coupled to high speed interface **708**. In other implementations, multiple processors and/or multiple buses may be used, as appropriate, along with multiple memories and types of memory. Also, multiple computing devices **700** may be connected, with each device providing portions of the necessary operations (e.g., as a server bank, a group of blade servers, or a multi-processor system).

The memory **704** stores information within the computing device **700**. In one implementation, the memory **704** is a computer-readable medium. In one implementation, the memory **704** is a volatile memory unit or units. In another implementation, the memory **704** is a non-volatile memory unit or units.

The storage device **706** is capable of providing mass storage for the computing device **700**. In one implementation, the storage device **706** is a computer-readable medium. In various different implementations, the storage device **706** may be a floppy disk device, a hard disk device, an optical disk device, or a tape device, a flash memory or other similar solid state memory device, or an array of devices, including devices

in a storage area network or other configurations. In one implementation, a computer program product is tangibly embodied in an information carrier. The computer program product contains instructions that, when executed, perform one or more methods, such as those described above. The information carrier is a computer- or machine-readable medium, such as the memory **704**, the storage device **706**, or memory on processor **702**.

The high speed controller **708** manages bandwidth-intensive operations for the computing device **700**, while the low speed controller **712** manages lower bandwidth-intensive operations. Such allocation of duties is exemplary only. In one implementation, the high-speed controller **708** is coupled to memory **704**, display **716** (e.g., through a graphics processor or accelerator), and to high-speed expansion ports **710**, which may accept various expansion cards (not shown). In the implementation, low-speed controller **712** is coupled to storage device **706** and low-speed expansion port **714**. The low-speed expansion port, which may include various communication ports (e.g., USB, Bluetooth, Ethernet, wireless Ethernet) may be coupled to one or more input/output devices, such as a keyboard, a pointing device, a scanner, or a networking device such as a switch or router, e.g., through a network adapter.

The computing device **700** may be implemented in a number of different forms, as shown in the figure. For example, it may be implemented as a standard server **720**, or multiple times in a group of such servers. It may also be implemented as part of a rack server system **724**. In addition, it may be implemented in a personal computer such as a laptop computer **722**. Alternatively, components from computing device **700** may be combined with other components in a mobile device (not shown), such as device **750**. Each of such devices may contain one or more of computing device **700**, **750**, and an entire system may be made up of multiple computing devices **700**, **750** communicating with each other.

Computing device **750** includes a processor **752**, memory **764**, an input/output device such as a display **754**, a communication interface **766**, and a transceiver **768**, among other components. The device **750** may also be provided with a storage device, such as a microdrive or other device, to provide additional storage. Each of the components **750**, **752**, **764**, **754**, **766**, and **768**, are interconnected using various buses, and several of the components may be mounted on a common motherboard or in other manners as appropriate.

The processor **752** can process instructions for execution within the computing device **750**, including instructions stored in the memory **764**. The processor may also include separate analog and digital processors. The processor may provide, for example, for coordination of the other components of the device **750**, such as control of user interfaces, applications run by device **750**, and wireless communication by device **750**.

Processor **752** may communicate with a user through control interface **758** and display interface **756** coupled to a display **754**. The display **754** may be, for example, a TFT LCD display or an OLED display, or other appropriate display technology. The display interface **756** may comprise appropriate circuitry for driving the display **754** to present graphical and other information to a user. The control interface **758** may receive commands from a user and convert them for submission to the processor **752**. In addition, an external interface **762** may be provide in communication with processor **752**, so as to enable near area communication of device **750** with other devices. External interface **762** may provide, for example, for wired communication (e.g., via a docking procedure) or for wireless communication (e.g., via Bluetooth or other such technologies).

The memory **764** stores information within the computing device **750**. In one implementation, the memory **764** is a computer-readable medium. In one implementation, the memory **764** is a volatile memory unit or units. In another implementation, the memory **764** is a non-volatile memory unit or units. Expansion memory **774** may also be provided and connected to device **750** through expansion interface **772**, which may include, for example, a SIMM card interface. Such expansion memory **774** may provide extra storage space for device **750**, or may also store applications or other information for device **750**. Specifically, expansion memory **774** may include instructions to carry out or supplement the processes described above, and may include secure information also. Thus, for example, expansion memory **774** may be provide as a security module for device **750**, and may be programmed with instructions that permit secure use of device **750**.

The memory may include for example, flash memory and/or MRAM memory, as discussed below. In one implementation, a computer program product is tangibly embodied in an information carrier. The computer program product contains instructions that, when executed, perform one or more methods, such as those described above. The information carrier is a computer- or machine-readable medium, such as the memory **764**, expansion memory **774**, or memory on processor **752**.

Device **750** may communicate wirelessly through communication interface **766**, which may include digital signal processing circuitry where necessary. Communication interface **766** may provide for communications under various modes or protocols, such as GSM voice calls, SMS, EMS, or MMS messaging, CDMA, TDMA, PDC, WCDMA, CDMA2000, or GPRS, among others. Such communication may occur, for example, through radio-frequency transceiver **768**. In addition, short-range communication may occur, such as using a Bluetooth, WiFi, or other such transceiver (not shown). In addition, GPS receiver module **770** may provide additional wireless data to device **750**, which may be used as appropriate by applications running on device **750**.

Device **750** may also communication audibly using audio codec **760**, which may receive spoken information from a user and convert it to usable digital information. Audio codex **760** may likewise generate audible sound for a user, such as through a speaker, e.g., in a handset of device **750**. Such sound may include sound from voice telephone calls, may include recorded sound (e.g., voice messages, music files, etc.) and may also include sound generated by applications operating on device **750**.

The computing device **750** may be implemented in a number of different forms, as shown in the figure. For example, it may be implemented as a cellular telephone **780**. It may also be implemented as part of a smartphone **782**, personal digital assistant, or other similar mobile device.

Various implementations of the systems and techniques described here can be realized in digital electronic circuitry, integrated circuitry, specially designed ASICs (application specific integrated circuits), computer hardware, firmware, software, and/or combinations thereof. These various implementations can include implementation in one or more computer programs that are executable and/or interpretable on a programmable system including at least one programmable processor, which may be special or general purpose, coupled to receive data and instructions from, and to transmit data and instructions to, a storage system, at least one input device, and at least one output device.

These computer programs (also known as programs, software, software applications or code) include machine instructions for a programmable processor, and can be implemented in a high-level procedural and/or object-oriented programming language, and/or in assembly/machine language. As used herein, the terms "machine-readable medium" "computer-readable medium" refers to any computer program product, apparatus and/or device (e.g., magnetic discs, optical disks, memory, Programmable Logic Devices (PLDs)) used to provide machine instructions and/or data to a programmable processor, including a machine-readable medium that receives machine instructions as a machine-readable signal. The term "machine-readable signal" refers to any signal used to provide machine instructions and/or data to a programmable processor.

To provide for interaction with a user, the systems and techniques described here can be implemented on a computer having a display device (e.g., a CRT (cathode ray tube) or LCD (liquid crystal display) monitor) for displaying information to the user and a keyboard and a pointing device (e.g., a mouse or a trackball) by which the user can provide input to the computer. Other kinds of devices can be used to provide for interaction with a user as well; for example, feedback provided to the user can be any form of sensory feedback (e.g., visual feedback, auditory feedback, or tactile feedback); and input from the user can be received in any form, including acoustic, speech, or tactile input.

The systems and techniques described here can be implemented in a computing system that includes a back end component (e.g., as a data server), or that includes a middleware component (e.g., an application server), or that includes a front end component (e.g., a client computer having a graphical user interface or a Web browser through which a user can interact with an implementation of the systems and techniques described here), or any combination of such back end, middleware, or front end components. The components of the system can be interconnected by any form or medium of digital data communication (e.g., a communication network). Examples of communication networks include a local area network ("LAN"), a wide area network ("WAN"), and the Internet.

The computing system can include clients and servers. A client and server are generally remote from each other and typically interact through a communication network. The relationship of client and server arises by virtue of computer programs running on the respective computers and having a client-server relationship to each other.

A number of embodiments of the invention have been described. Nevertheless, it will be understood that various modifications may be made without departing from the spirit and scope of the invention. For example, various forms of the flows shown above may be used, with steps re-ordered, added, or removed. Also, although several applications of the payment systems and methods have been described, it should be recognized that numerous other applications are contemplated. Accordingly, other embodiments are within the scope of the following claims.

What is claimed is:

1. A system for communicating fleet vehicle information, comprising:

an electronic onboard recorder unit configured to mount inside a vehicle and provide a wired connection to the vehicle for gathering data during operation of the vehicle, the electronic onboard recorder unit being free of a user interface display and including: a short-range wireless communication device to wirelessly communicate vehicle usage information to a separate device, and a data connection port configured to removably receive a data cable of a remote computer device; and

a portable wireless display unit comprising: a short-range wireless communication device to wirelessly communicate with the electronic onboard recorder unit when the electronic onboard recorder unit and the portable wireless display unit are both positioned inside the vehicle, a cellular communication device configured to provide a cellular communication link with a remote system, a user interface including a display device, and a computer-readable memory module to store a driver summary electronic report, the driver summary electronic report being generated by the portable wireless display unit in response to wirelessly receiving the vehicle usage information from the electronic onboard recorder unit mounted to the vehicle, the driver summary electronic report including identification information for a driver and hours of service information for the driver,

wherein in response to user input on the user interface of the portable wireless display unit indicative of a request to export the driver summary electronic report from the electronic onboard recorder unit mounted to the vehicle, the portable wireless display unit is configured to wirelessly transfer the driver summary electronic report to the electronic onboard recorder unit mounted to the vehicle for exporting the driver summary electronic report via the data connection port of the electronic onboard recorder unit to the remote computer device.

2. The system of claim **1**, wherein the portable wireless display unit comprises a cellular phone device having a user interface that displays hours of service information, the hours of service information being updated in response to wirelessly receiving vehicle usage information from the electronic onboard recorder unit.

3. The system of claim **2**, wherein the short-range wireless communication devices of the electronic onboard recorder unit and the portable wireless display unit are Bluetooth wireless communication devices.

4. The system of claim **1**, wherein the data connection port of the electronic onboard recorder unit comprises a USB connection port arranged along a housing of the electronic onboard recorder unit.

5. The system of claim **1**, wherein the electronic onboard recorder unit and the portable wireless display unit provide two-way wireless communication such that the portable wireless display unit wirelessly receives at least the vehicle usage information from the electronic onboard recorder unit and the electronic onboard recorder unit wirelessly receives at least the driver identification information from the portable wireless display unit.

6. The system of claim **1**, wherein the portable wireless display unit wirelessly communicates with the electronic onboard recorder unit when the electronic onboard recorder unit is positioned inside the vehicle and the portable wireless display unit is positioned in proximity to the vehicle.

7. The system of claim **1**, wherein the electronic onboard recorder unit comprises a connector to mate with an engine control module of the vehicle, wherein the electronic onboard recorder unit comprises a memory module that stores vehicle data in response to signals from the engine control module.

8. The system of claim **7**, wherein the electronic onboard recorder unit is configured to simultaneously communicate via multiple protocols of at least one engine control module.

9. The system of claim **7**, wherein the electronic onboard recorder unit houses one or more accelerometers configured to detect movements of the vehicle, and wherein the elec-

tronic onboard recorder unit houses a GPS receiver device to receive location signals from at least one GPS satellite.

10. A system for communicating fleet vehicle information, comprising:

an electronic onboard recorder unit configured to mount inside a vehicle and provide a wired connection to the vehicle for gathering data during operation of the vehicle, the electronic onboard recorder unit being free of a user interface display and including a short-range wireless communication device to wirelessly communicate vehicle usage information to a second device when the second device is positioned inside the vehicle; and

a portable wireless display unit comprising: a short-range wireless communication device to wirelessly communicate with the electronic onboard recorder unit when the electronic onboard recorder unit and the portable wireless display unit are both positioned inside the vehicle, a long-range communication device configured to provide a cellular or satellite communication link with a remote system, a computer-readable memory module to store a driver summary electronic report, the driver summary electronic report being generated by the portable wireless display unit in response to wirelessly receiving the vehicle usage information from the electronic onboard recorder unit mounted to the vehicle, the driver summary electronic report including driver identification information and driver hours of service information, and a user interface including a display device that displays the driver hours of service information,

wherein the electronic onboard recorder unit and the portable wireless display unit provide two-way wireless communication such that the portable wireless display unit wirelessly receives vehicle usage information from the electronic onboard recorder unit and the electronic onboard recorder unit wirelessly receives the driver summary electronic report from the portable wireless display unit.

11. The system of claim **10**, wherein the portable wireless display unit comprises a cellular or satellite phone device having a user interface that displays hours of service information, the hours of service information being updated in response to wirelessly receiving vehicle usage information from the electronic onboard recorder unit.

12. The system of claim **11**, wherein the short-range wireless communication devices of the electronic onboard recorder unit and the portable wireless display unit are Bluetooth wireless communication devices.

13. The system of claim **12**, wherein the electronic onboard recorder unit comprises a USB connection port arranged along a housing of the electronic onboard recorder unit and configured to removably receive a data cable of a remote computer device.

14. The system of claim **13**, wherein the electronic onboard recorder unit comprises a connector to mate with an engine control module of the vehicle, wherein the electronic onboard recorder unit comprises a memory module that stores vehicle data in response to signals from the engine control module.

15. The system of claim **14**, wherein the electronic onboard recorder unit houses one or more accelerometers configured to detect movements of the vehicle, and wherein the electronic onboard recorder unit houses a GPS receiver device to receive location signals from at least one GPS satellite.

16. A system for communicating fleet vehicle information, comprising:

an electronic onboard recorder unit configured to mount inside a vehicle and provide a wired connection to the vehicle for gathering data during operation of the vehicle, the electronic onboard recorder unit including: a short-range wireless communication device to wirelessly communicate vehicle usage information to a second device when the second device is positioned inside the vehicle, and a USB connection port configured to irremovably receive a USB data cable of a remote computer device; and

a portable wireless display unit comprising: a short-range wireless communication device to wirelessly communicate with the electronic onboard recorder unit when the electronic onboard recorder unit and the portable wireless display unit are both positioned inside the vehicle, a long-range communication device configured to provide a cellular or satellite communication link with a remote system, a user interface including a display device, and a computer-readable memory module to store a driver summary electronic report, the driver summary electronic report being generated by the portable wireless display unit in response to wirelessly receiving the vehicle usage information from the electronic onboard recorder unit mounted to the vehicle, the driver summary electronic report including identification information for a driver and hours of service information for the driver,

wherein the electronic onboard recorder unit outputs the driver summary electronic report via the USB connection port in response to receiving the driver summary electronic report from the portable wireless display unit, and

wherein the portable wireless display unit outputs the driver summary electronic report via the cellular or satellite communication link to the remote system.

17. The system of claim **16**, wherein the portable wireless display unit comprises a cellular or satellite phone device having a user interface that displays hours of service information, the hours of service information being updated in response to wirelessly receiving vehicle usage information from the electronic onboard recorder unit.

18. The system of claim **17**, wherein the short-range wireless communication devices of the electronic onboard recorder unit and the portable wireless display unit are Bluetooth wireless communication devices.

19. The system of claim **18**, wherein the electronic onboard recorder unit and the portable wireless display unit provide two-way wireless communication such that the portable wireless display unit wirelessly receives at least the vehicle usage information from the electronic onboard recorder unit and the electronic onboard recorder unit wirelessly receives at least the driver identification information from the portable wireless display unit.

20. The system of claim **16**, wherein the electronic onboard recorder unit comprises a connector to mate with an engine control module of the vehicle, wherein the electronic onboard recorder unit comprises a memory module that stores vehicle data in response to signals from the engine control module.

21. The system of claim **20**, wherein the electronic onboard recorder unit houses one or more accelerometers configured to detect movements of the vehicle, and wherein the electronic onboard recorder unit houses a GPS receiver device to receive location signals from at least one GPS satellite.

22. A computer-implemented method for providing a driver summary electronic report, comprising:

wirelessly communicating vehicle usage information from an electronic onboard recorder unit mounted to a vehicle to a portable wireless display unit, the electronic onboard recorder unit having a wired connection to the vehicle;

generating a driver summary electronic report at the portable wireless display unit in response to the electronic onboard recorder unit wirelessly communicating the vehicle usage information, the driver summary electronic report including identification information for a driver and hours of service information for the driver;

wirelessly receiving, at the electronic onboard recorder unit, the driver summary electronic report from the portable wireless display unit;

removably receiving a USB data cable in a USB connection port of the electronic onboard recorder unit mounted to the vehicle; and

in response to a user request input to the portable wireless display unit, transferring the driver summary electronic report from the electronic onboard recorder unit mounted to the vehicle via the USB data cable to a remote computer device.

23. A computer-implemented method for providing a driver summary electronic report, comprising:

wirelessly receiving, at a portable wireless display unit, vehicle usage information from an electronic onboard recorder unit mounted to a vehicle and having a wired connection to the vehicle;

generating a driver summary electronic report at the portable wireless display unit in response to wirelessly receiving the vehicle usage information from the electronic onboard recorder unit mounted to the vehicle, the driver summary electronic report including identification information for a driver and hours of service information for the driver;

storing the driver summary electronic report in a computer-readable memory module of the portable wireless display unit, the portable wireless display unit being configured to wirelessly communicate with the electronic onboard recorder unit mounted to the vehicle;

receiving user input on the portable wireless display unit indicative of a request to export the driver summary electronic report from the electronic onboard recorder unit mounted to the vehicle; and

wirelessly transferring the driver summary electronic report from the portable wireless display unit to the electronic onboard recorder unit mounted to the vehicle for exporting the driver summary electronic report via a removable data cable to a remote computer device.

24. A computer-implemented method for providing a driver summary electronic report, comprising:

wirelessly communicating vehicle usage information from an electronic onboard recorder unit mounted to a vehicle to a portable wireless display unit, the electronic onboard recorder unit having a wired connection to the vehicle;

generating a driver summary electronic report at the portable wireless display unit in response to wirelessly receiving the vehicle usage information from the electronic onboard recorder unit mounted to the vehicle, the driver summary electronic report including identification information for a driver and hours of service information for the driver;

storing the driver summary electronic report in a computer-readable memory module of the portable wireless display unit, the portable wireless display unit being configured to wirelessly communicate with the electronic onboard recorder unit mounted to the vehicle;

receiving user input on the portable wireless display unit indicative of a request to export the driver summary electronic report from the electronic onboard recorder unit mounted to the vehicle;

wirelessly transferring the driver summary electronic report from the portable wireless display unit to the electronic onboard recorder unit mounted to the vehicle;

removably receiving a data cable in a corresponding port of the electronic onboard recorder unit mounted to the vehicle; and

transferring the driver summary electronic report from the electronic onboard recorder unit mounted to the vehicle via the data cable to a remote computer device.

* * * * *

UNITED STATES PATENT AND TRADEMARK OFFICE

CERTIFICATE OF CORRECTION

PATENT NO. : 8,626,568 B2
APPLICATION NO. : 13/174331
DATED : January 7, 2014
INVENTOR(S) : Colin D Warkentin, Rakinder Kalirai and Christopher Alexander Sekula

It is certified that error appears in the above-identified patent and that said Letters Patent is hereby corrected as shown below:

In the Claims:

Column 24, Line 6 (Claim 16), delete “irremovably” and insert -- removably --, therefor.

Signed and Sealed this
Thirteenth Day of May, 2014

Michelle K. Lee

Michelle K. Lee
Deputy Director of the United States Patent and Trademark Office