Trials@uspto.gov
Tel: 571-272-7822

Paper 10
Date: January 9, 2024

UNITED STATES PATENT AND TRADEMARK OFFICE

BEFORE THE PATENT TRIAL AND APPEAL BOARD

LG ELECTRONICS INC.,
Petitioner,

v.

JAWBONE INNOVATIONS, LLC,
Patent Owner.

IPR2023-01112
Patent 8,321,213 B2

Before GEORGIANNA W. BRADEN, NORMAN H. BEAMER, and SCOTT RAEVSKY, *Administrative Patent Judges*.

RAEVSKY, *Administrative Patent Judge*.

DECISION
Granting Institution of *Inter Partes* Review
35 U.S.C. § 314
Dismissing Petitioner's Motion for Joinder
35 U.S.C. § 315(c); 37 C.F.R. § 42.122

I. INTRODUCTION

LG Electronics Inc. ("Petitioner") filed a Petition requesting an *inter partes* review of claims 14–42 in U.S. Patent No. 8,321,213 B2 (Ex. 1001, "the '213 patent"). Paper 2 ("Pet."). Jawbone Innovations, LLC ("Patent Owner") filed a Preliminary Response. Paper 9 ("Prelim. Resp.").

Concurrently with the Petition, Petitioner filed a Motion for Joinder seeking joinder as a party in *Amazon.com, Inc. v. Jawbone Innovations, LLC*, IPR2023-00276 ("the Amazon IPR") and consolidation with the Amazon IPR. Paper 3. Patent Owner filed an Opposition to Petitioner's Motion for Joinder. Paper 7. Petitioner filed a Reply to Patent Owner's Opposition. Paper 8. Subsequently, the Amazon IPR terminated based on settlement. IPR2023-00276, Paper 17. We therefore dismiss Petitioner's Motion for Joinder as moot.

Under 35 U.S.C. § 314(a), an *inter partes* review may not be instituted unless it is determined that there is a reasonable likelihood that the petitioner would prevail with respect to at least one of the claims challenged in the petition. After considering the parties' arguments and evidence, and for the reasons set forth below, Petitioner demonstrates a reasonable likelihood of prevailing with respect to at least one of the challenged claims of the '213 patent. Accordingly, we institute an *inter partes* review with respect to all challenged claims and grounds asserted in the Petition. 37 C.F.R. § 42.108(a) (2022).

Our factual findings and conclusions at this stage of the proceeding are based on the evidentiary record developed thus far. This is not a final decision as to patentability of the challenged claims.

II. BACKGROUND

A. The '213 Patent

The '213 patent relates generally "to noise suppression" and more particularly "to noise suppression systems, devices, and methods for use in acoustic applications." Ex. 1001, 1:16–19, code (57). The '213 patent explains that the "ability to correctly identify voiced and unvoiced speech is critical to many speech applications including speech recognition, speaker verification, noise suppression, and many others." *Id.* at 1:23–26. In "the speaker's environment," however, "there may exist one or more noise sources that pollute the speech signal, the signal of interest, with unwanted acoustic noise." *Id.* at 1:28–31. The unwanted acoustic noise "makes it difficult or impossible for the receiver, whether human or machine, to understand the user's speech." *Id.* at 1:31–32.

The '213 patent discloses "Acoustic Voice Activity Detection (AVAD) methods and systems" that use physical microphones "to generate virtual directional microphones which have very similar noise responses and very dissimilar speech responses." Ex. 1001, 3:57–62, code (57); *see id.* at 4:21–25, 5:35–52, 17:44–51. "The ratio of the energies of the virtual microphones is then calculated over a given window size and the ratio can then be used with a variety of methods to generate a VAD signal." *Id.* at 3:62–65, code (57). "The virtual microphones can be constructed using either a fixed or an adaptive filter." *Id.* at 3:65–66, code (57); *see id.* at 4:27–30.

The '213 patent's Figure 3 (reproduced below) is a diagram depicting an example of a virtual microphone V_2:

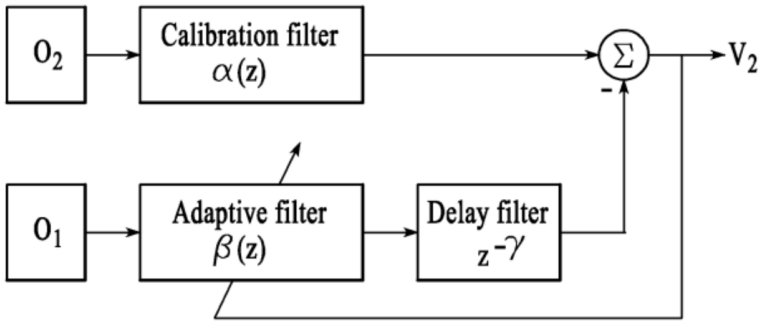

FIG.3

Figure 3 illustrates the following components where "z" denotes a discrete frequency domain and "γ" is a fixed delay that depends on the size of the microphone array:

(1) a physical omnidirectional microphone O_1 providing a signal to an adaptive filter β(z);

(2) the adaptive filter β(z) providing a signal to a delay filter $z^{-\gamma}$;

(3) a physical omnidirectional microphone O_2 providing a signal to a calibration filter α(z);

(4) a summing circuit (Σ) summing (i) a positive signal from the calibration filter α(z) and (ii) a negative signal from the delay filter $z^{-\gamma}$ to form a virtual microphone V_2; and

(5) the virtual microphone V_2 providing a signal to the adaptive filter β(z).

See Ex. 1001, 1:62–63, 4:41, 5:22–33, 6:1–16, Fig. 3.

B. Challenged Claims

Claim 14 is illustrative of the challenged claims:[1]

14. [14pre] A device comprising:

[14a] a first physical microphone generating a first signal;

[14b] a second physical microphone generating a second signal; and

[14c] a processing component coupled to the first physical microphone and the second physical microphone,

[14d] the processing component forming a first virtual microphone,

[14e] the processing component forming a filter that describes a relationship for speech between the first physical microphone and the second physical microphone,

[14f] the processing component forming a second virtual microphone by applying the filter to the first signal to generate a first intermediate signal, and summing the first intermediate signal and the second signal,

[14g] the processing component detecting acoustic voice activity of a speaker when an energy ratio of energies of the first virtual microphone and the second virtual microphone is greater than a threshold value.

Ex. 1001, 37:61–38:11.

[1] We use the same numbers and letters that Petitioner uses to identify the claim language. *See* Pet. viii (Listing of Challenged Claims). These annotations do not impact our analysis.

C. Asserted Challenges to Patentability

Petitioner asserts the following challenges to patentability (Pet. 1–2):

Claim(s) Challenged	35 U.S.C. §[2]	Reference(s)/Basis
14–17, 35–42	103(a)	Avendano,[3] Visser[4]
18–26, 33, 34	103(a)	Avendano, Visser, Bisgaard[5]
27–29	103(a)	Avendano, Visser, Bisgaard, Hou[6]
30–32	103(a)	Avendano, Visser, Bisgaard, Hou, Frequency Art (Byrne,[7] Burnett,[8] and/or Berglund[9])

To support these challenges, Petitioner relies on the declaration of Thomas W. Kenny, Ph.D. (Ex. 1003). Patent Owner relies on the declaration of Akbar M. Sayeed, Ph.D. (Ex. 2002).

---

[2] The Leahy-Smith America Invents Act ("AIA"), Pub. L. No. 112-29, 125 Stat. 284, 285–88 (2011), revised 35 U.S.C. §§ 102, 103 effective March 16, 2013. The '932 patent was filed before March 16, 2013, so we apply the pre-AIA versions of §§ 102, 103. Ex. 1001, code (22).
[3] US 8,194,880 B2, issued June 5, 2012 (Ex. 1005).
[4] US 7,464,029 B2, issued Dec. 9, 2008 (Ex. 1006).
[5] US 2011/0103626 A1, published May 5, 2011 (Ex. 1010).
[6] US 7,155,019 B2, issued Dec. 26, 2006 (Ex. 1008).
[7] Denis Byrne et al., *An International Comparison of Long-Term Average Speech Spectra*, The Journal of the Acoustical Society of America, Vol. 96, No. 4, 2108–20 (October 1994) (Ex. 1009).
[8] US 2002/0198705 A1, published Dec. 26, 2002 (Ex. 1012).
[9] Birgitta Berglund et al., *Sources and Effects of Low-Frequency Noise*, The Journal of the Acoustical Society of America, Vol. 99, No. 5, 2985–3002 (May 1996) (Ex. 1013).

IV. ANALYSIS

A. Legal Principles: Obviousness

"In an IPR, the petitioner has the burden from the onset to show with particularity why the patent it challenges is unpatentable." *Harmonic Inc. v. Avid Tech., Inc.*, 815 F.3d 1356, 1363 (Fed. Cir. 2016) (citing 35 U.S.C. § 312(a)(3) (requiring *inter partes* review petitions to identify "with particularity . . . the evidence that supports the grounds for the challenge to each claim")).

A patent may not be obtained "if the differences between the subject matter sought to be patented and the prior art are such that the subject matter as a whole would have been obvious at the time the invention was made to a person having ordinary skill in the art to which said subject matter pertains." 35 U.S.C. § 103(a) (2006). An obviousness analysis involves underlying factual inquiries including (1) the scope and content of the prior art; (2) differences between the claimed invention and the prior art; (3) the level of ordinary skill in the art; and (4) where in evidence, objective indicia of nonobviousness, such as commercial success, long-felt but unsolved needs, and failure of others. *Graham v. John Deere Co.*, 383 U.S. 1, 17–18, 35–36 (1966). We analyze the obviousness issues according to these principles.

B. Level of Ordinary Skill in the Art

Petitioner asserts that a person of ordinary skill in the art ("POSITA") would have had "at least a bachelor of science in electrical engineering, computer engineering, computer science, mechanical engineering, or a related discipline, with at least two years of relevant experience in a field related to acoustics, speech recognition, speech detection, or signal processing." Pet. 6 (citing Ex. 1003 ¶¶ 22–23). Petitioner also asserts that

"[a]dditional education or industry experience may compensate for a deficit in the other." *Id.* Patent Owner proposes a nearly identical definition. Prelim. Resp. 14 (citing Ex. 2002 ¶ 26).

Based on the current record and for purposes of analysis, we accept Petitioner's description of an ordinarily skilled artisan as consistent with the '213 patent and the asserted prior art. Our decision would not have changed had we adopted Patent Owner's proposal.

C. Claim Construction

In *inter partes* review, we construe a claim using the same claim construction standard that would be used to construe the claim in a civil action under 35 U.S.C. § 282(b), including construing the claim in accordance with the ordinary and customary meaning of such claim as understood by one of ordinary skill in the art and the prosecution history pertaining to the patent. 37 C.F.R. § 42.100(b) (2022).

The Petition construes no terms. Pet. 7. The Preliminary Response proposes construing "filter that describes a relationship for speech between the first physical microphone and the second physical microphone." Prelim. Resp. 10–13. Patent Owner proposes construing this phrase to mean "[a] filter that alters the magnitude of a signal based on the relative responses to speech of the first and second physical microphones." *Id.* at 10.

Patent Owner relies on the '213 patent specification for its construction. Patent Owner asserts that the specification identifies $\beta(z)$ as the filter describing the relationship for speech. *Id.* at 10–11 (citing Ex. 1001, 5:31–32 ("$\beta(z)$ is a filter that describes the relationship between O_1 and calibrated O_2 for speech.")). An example of the filter $\beta(z)$ is shown in Figure 3, which is a diagram reproduced below:

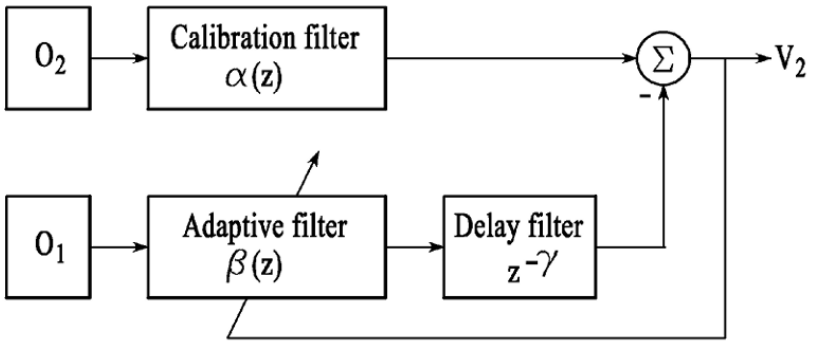

FIG.3

Id. In Figure 3, the filter β(z) is shown as an adaptive filter. Patent Owner contends that "the specification provides two methods to calculate β(z): 1) as a function of the distance between each microphone and the user's mouth," Ex. 1001, 5:52–59, "and 2) adaptively," *id.* at 6:1–16. Prelim. Resp. 10–11 (citing Ex. 2002 ¶ 39). "In either case," Patent Owner argues, "β(z) compensates for the difference in response to speech of the two microphones, not the temporal difference," because a "separate delay . . . compensates for the temporal difference." *Id.* at 12 (citing Ex. 1001, 5:35–45; Ex. 2002 ¶¶ 40–41). Therefore, Patent Owner concludes, a POSITA would interpret this limitation as referring to "a filter that alters the magnitude of a signal based on the relative responses to speech of the first and second physical microphones." *Id.*

At this stage, we determine that Patent Owner's proposed construction improperly imports an embodiment from the specification. "While we read claims in view of the specification . . . we do not read limitations from the embodiments in the specification into the claims." *Hill-Rom Servs. Inc. v. Stryker Corp.*, 755 F. 3d 1367, 1371 (Fed. Cir. 2014). "We depart from the plain and ordinary meaning of claim terms based on the specification in only

two instances: lexicography and disavowal." *Id.* "The standards for finding lexicography and disavowal are exacting. To act as its own lexicographer, a patentee must clearly set forth a definition of the disputed claim term other than its plain and ordinary meaning and must clearly express an intent to redefine the term." *Id.* (internal quotation omitted).

On this record, there is no such clear definition in the specification, express or implied. The disclosed filter β(z) "describes the relationship between O_1 and calibrated O_2 for speech." Ex. 1001, 5:31–32. But the filter β(z) is merely a disclosed embodiment and does not *define* the claimed "filter that describes a relationship for speech." *See id.* Patent Owner also points to no disclosure that disavows interpretations other than the example filter β(z).

Our reviewing court "has repeatedly cautioned against limiting the claimed invention to preferred embodiments or specific examples in the specification." *Williamson v. Citrix Online, LLC*, 792 F.3d 1339, 1346–47 (Fed. Cir. 2015). We decline Patent Owner's invitation to limit the claims to unclaimed features.

Patent Owner separately asserts that claim 17's recitation of "applying a delay to the first intermediate signal" clarifies that a POSITA would not interpret claim 14's filter to include a delay. Prelim. Resp. 16. Patent Owner argues that "[a] POSITA would know that applying two delays in succession is equivalent to applying a single delay for the sum of those two delays. Thus, a POSITA would realize that the filter cannot be a delay filter[.]" Prelim. Resp. 16 (Ex. 2002 ¶ 62). At this stage, we do not agree. Claim 17 merely requires a delay to be applied to a first intermediate signal. To the extent Patent Owner argues that a POSITA would not have applied

two delays within a single filter, this assertion is unsupported.[10] *See* Prelim. Resp. 16.

No other terms require construction. *See Realtime Data, LLC v. Iancu*, 912 F.3d 1368 (Fed. Cir. 2019) ("The Board is required to construe 'only those terms . . . that are in controversy, and only to the extent necessary to resolve the controversy.'" (quoting *Vivid Techs., Inc. v. Am. Sci. & Eng'g, Inc.*, 200 F.3d 795, 803 (Fed. Cir. 1999))).

D. Alleged Obviousness over Avendano and Visser

Petitioner contends that claims 14–17 and 35–42 are unpatentable over the combination of Avendano and Visser. *See* Pet. 7–43.

1. Overview of Avendano

Avendano discloses systems and methods "for utilizing inter-microphone level differences (ILD) to attenuate noise and enhance speech." Ex. 1005, 2:5–7, 3:13–17, code (57). Preferably, "the ILD is based on energy level differences of a pair of omni-directional microphones." *Id.* at 2:7–9, code (57). Avendano's Figure 4a (reproduced below) is a diagram depicting an embodiment of various modules:

[10] Although not in the record, the panel believes that prior art showing filters having multiple delay blocks is replete in the signal processing literature. The parties may wish to address this point during trial.

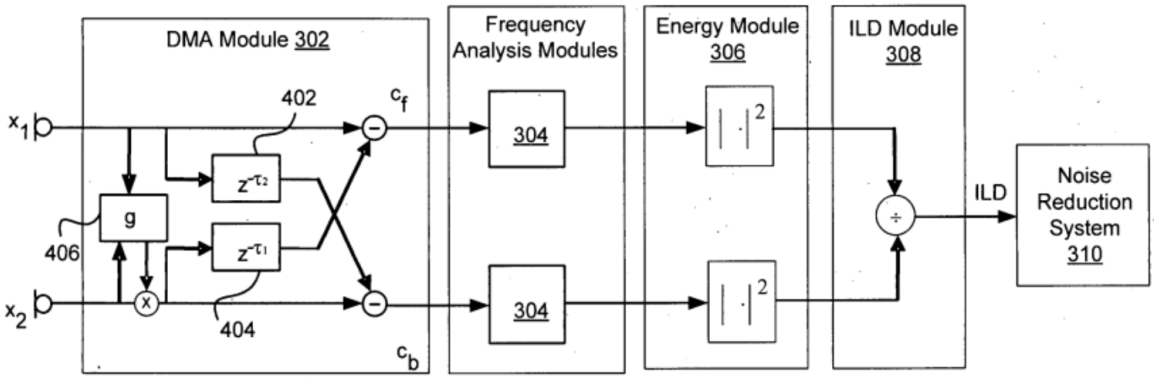

FIG. 4a

Id. at 5:15–17. The modules shown in Figure 4a receive first and second signals x_1 and x_2 and includes differential microphone array (DMA) module 302, frequency-analysis module 304, energy module 306, ILD module 308, and noise-reduction system 310. *Id.* at 2:20, 2:61–63, 5:15–17, 6:36–40. Of note, DMA module 302 determines "sounds and signals in a front and back cardioid region about" audio device 104 by "delaying and subtracting the acoustic signals captured by the microphones 106 and 108." *Id.* at 4:29–33. By doing so, DMA module 302 creates "directional patterns" for the microphones. *Id.* at 4:27–29, 4:40–46.

2. Overview of Visser

Visser discloses methods for separating speech signals from noise sources, including independent component analysis (ICA) and blind signal (or source) separation (BSS). Ex. 1006, 3:3–20, 8:16–19, 14:33–40, 16:6–27, 18:1–4, 18:26–29. Visser's Figure 10 (reproduced below) is a diagram depicting a sub-module for an ICA or BSS processing function:

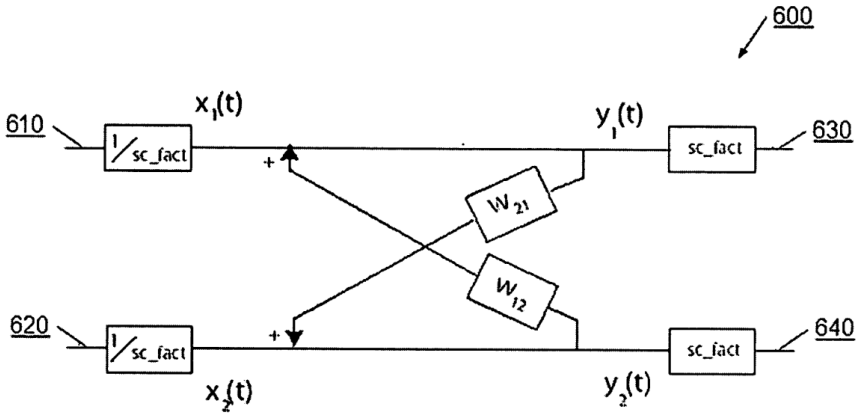

FIG. 10

Figure 10 illustrates processing sub-module 600 receiving input signal X_1 on channel 610 and input signal X_2 on channel 620. Ex. 1006, 7:55–57, 17:29–37, Fig. 10. "Typically, each of these signals would come from at least one microphone." *Id.* at 17:37–38. Sub-module 600 includes cross filters w_{12} and w_{21}. *Id.* at 17:39–41, 17:56–64, Fig. 10. Cross filters w_{12} and w_{21} facilitate separating speech signals from noise sources. *Id.* at 16:8–27, 17:56–64.

3. Independent Claim 14

a. Undisputed Limitations

Petitioner asserts that, to the extent the preamble, "A device comprising," is limiting, Avendano discloses claim 14's preamble because Avendano discloses a device. Pet. 22 (citing, e.g., Ex. 1003 ¶ 126; Ex. 1005, 3:12–35, Figs. 1a–3).

Claim 14 next recites "[14a] a first physical microphone generating a first signal." Petitioner contends that Avendano discloses limitation [14a] because Avendano's audio device 104 comprises primary microphone 106 generating a primary acoustic signal X_1. *Id.* (citing Ex. 1003 ¶¶ 127–128; Ex. 1005, 3:27–55, 4:20–27, Figs. 1a–1b, 4a–4b).

Claim 14 further recites "[14b] a second physical microphone generating a second signal." Petitioner contends that Avendano discloses limitation [14b] because Avendano's audio device 104 comprises secondary microphone 108 generating a secondary acoustic signal X_2. *Id.* at 24 (citing Ex. 1003 ¶¶ 129–130; Ex. 1005, 3:27–55, 4:20–27, Figs. 1a–1b, 4a–4b).

Claim 14 further recites "[14c] a processing component coupled to the first physical microphone and the second physical microphone." Petitioner contends that Avendano discloses limitation [14c] because Avendano's audio device 104 comprises processor 202 "coupled to first and second physical microphones" and executing "instructions to provide Avendano's 'modules.'" *Id.* at 25 (citing Ex. 1003 ¶¶ 131–132; Ex. 1005, 3:61–4:2, 10:51–60, Figs. 2–5).

Claim 14 further recites "[14d] the processing component forming a first virtual microphone." Petitioner contends that Avendano discloses limitation [14d] because Avendano's audio device 104 comprises DMA module 302 that forms a cardioid primary signal (C_f) by combining the primary acoustic signal and the secondary acoustic signal. *Id.* (citing Ex. 1003 ¶¶ 133–136; Ex. 1005, 4:27–6:10, Figs. 4a–4b).

Claim 14 further recites "[14f] the processing component forming a second virtual microphone by applying the filter to the first signal to generate a first intermediate signal, and summing the first intermediate signal and the second signal." Petitioner contends that Avendano discloses limitation [14f] or alternatively that the combined disclosures in Avendano and Visser teach limitation [14f]. *Id.* at 30–33. For example, Petitioner contends that Avendano discloses limitation [14f] because Avendano's audio device 104 comprises DMA module 302 that forms a cardioid

secondary signal (C_b) by applying delay node 402 to a first signal x_1 and combining that delayed signal with a second signal x_2. *Id.* at 30–31 (citing Ex. 1003 ¶¶ 149–156; Ex. 1005, 5:15–35, Figs. 4a–4b). Petitioner also contends that the combined disclosures in Avendano and Visser teach limitation [14f] because "[i]t would have been obvious to incorporate Visser's 'ICA or BSS processing function' into Avendano's system to further enhance the separation between speech and noise." *Id.* at 32–33.

Claim 14 further recites "[14g] the processing component detecting acoustic voice activity of a speaker when an energy ratio of energies of the first virtual microphone and the second virtual microphone is greater than a threshold value." Petitioner contends that Avendano discloses limitation [14g] because Avendano's audio device 104 determines the following:

(1) the energy of the first virtual microphone E_f "by integrating the first virtual microphone over time" using the equation $E_f(t,\omega) = \int_{frame} |C_f(t',\omega)|^2 dt'$;

(2) the energy of the second virtual microphone E_b "by integrating the second virtual microphone over time" using the equation $E_b(t,\omega) = \int_{frame} |C_b(t',\omega)|^2 dt'$; and

(3) the energy ratio or Inter-Level Difference (ILD) "by dividing the energy of the first virtual microphone by the energy of the second virtual microphone."

Id. at 34–35 (citing Ex. 1003 ¶¶ 167–170; Ex. 1005, 5:49–6:5, 6:8–34). Petitioner also contends that Avendano "compares the energy ratio (ILD) to a 'threshold' to determine the presence or absence of speech." *Id.* at 35 (citing Ex. 1003 ¶¶ 171–174; Ex. 1005, 6:35–7:9).

Patent Owner does not dispute Petitioner's arguments regarding the preamble or these limitations at this stage. We determine that on this record,

Petitioner has made a sufficient showing that the combination of Avendano and Visser discloses the preamble (whether or not limiting) and these limitations.

b. [14e] the processing component forming a filter that describes a relationship for speech between the first physical microphone and the second physical microphone

Petitioner contends that Avendano discloses limitation [14e] or alternatively that the combined disclosures in Avendano and Visser teach limitation [14e]. See Pet. 26–29. Patent Owner disputes both points. Prelim. Resp. 14–20.

(1) Avendano Alone

Regarding Avendano alone, Petitioner relies on Avendano's "delay node 402" as the claimed filter. Pet. 26. This filter is shown in Figure 4a of Avendano, which is a diagram reproduced below:

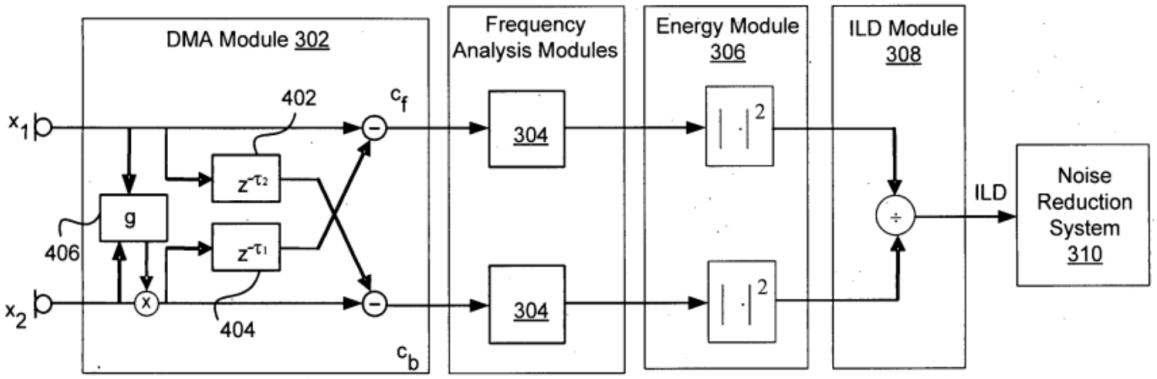

FIG. 4a

Figure 4a depicts differential microphone array (DMA) module 302, which includes the delay node 402. *See* Ex. 1005, 5:15–24, 4:26–27. According to

Petitioner, this delay node 402 describes a relationship for speech between the first and second physical microphones. Pet. 26 (citing Ex. 1003 ¶¶ 137–142). This is because, Petitioner contends, there will be a "difference in times of arrival of the signal from a speech source to the microphones," which is "due to a space difference between the microphones." *Id.* at 27 (citing Ex. 1005, 1:33–36; Ex. 1003 ¶ 139). In other words, Petitioner argues, "the 'relationship for speech' between Avendano's two physical microphones is, at least in part, that one microphone will receive speech prior to the other microphone." *Id.* (citing Ex. 1003 ¶ 139). Petitioner further explains that delay node 402 delays the first signal, so this delay node 402 "describes, at least in part, a temporal relationship for speech between the first and second signals." *Id.* (citing Ex. 1003 ¶ 140; Ex. 1005, 5:15–35).

Patent Owner disputes that Avendano discloses limitation [14e]. Prelim. Resp. 15–17. Under its proposed construction, Patent Owner argues, "the claim requires a filter that alters the magnitude of a signal based on the relative responses to speech of the first and second physical microphones," and Avendano's delay filter does not meet this requirement. *Id.* at 15 (citing Ex. 2002 ¶¶ 59–65). That is, Patent Owner contends, "the delay node does not alter the magnitude of the signal passing through it; it merely delays it for a predetermined time." *Id.* at 16. We disagree with Patent Owner at this stage because Patent Owner's argument relies on a construction we have not adopted.

Based on the current record, Petitioner establishes sufficiently for purposes of institution that Avendano discloses limitation [14e]. Avendano discloses positioning primary microphone 106 closer to audio (speech)

source 102 than secondary microphone 108. Ex. 1005, 3:45–47, Fig. 1a; Ex. 1003 ¶ 139. As Petitioner asserts, Avendano explains that "due to a space difference between the microphones," the microphones experience a "difference in times of arrival of the signals from a speech source." Ex. 1005, 1:33–36; *see* Ex. 1003 ¶ 139; Pet. 26. Dr. Kenny also persuasively testifies, on this record, that delay node 402 "can be implemented using one or more filters." Ex. 1003 ¶ 141 (citing Ex. 1005, 8:38–51). We therefore agree, on this record, that Avendano's delay node forms a filter that describes a relationship for speech between two physical microphones.

(2) Avendano and Visser

Petitioner also contends that the combined disclosures in Avendano and Visser teach limitation [14e] because it would have been obvious to incorporate Visser's ICA or BSS processing function, including Visser's cross filters, into Avendano's system. Pet. 28 (citing Ex. 1003 ¶¶ 144–148). Petitioner asserts that "Visser's cross filter w_{12} would have been applied to Avendano's second signal x_2," e.g., "to further increase speech content in the first virtual microphone C_f"; and "Visser's cross filter w_{21} would have been applied to Avendano's first signal x_1," e.g., "to further decrease speech content in the second virtual microphone C_b." *Id.* (citing Ex. 1003 ¶¶ 144–145).

To support this assertion, Petitioner provides a modified and annotated version of Avendano's Figure 4a, which is a diagram shown below:

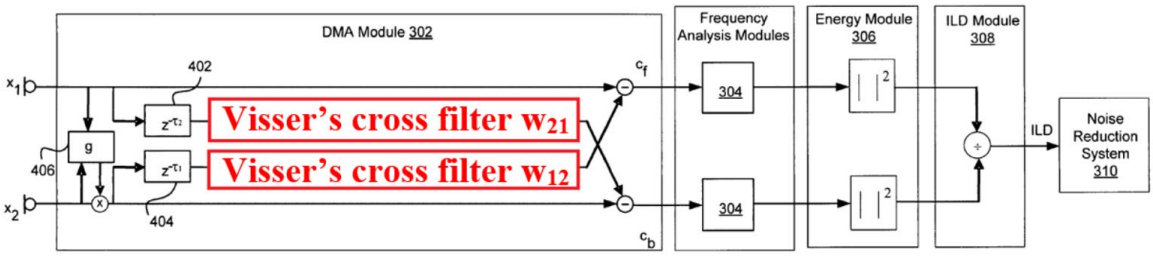

FIG. 4a

Id. at 29 (annotated to include cross filters). Figure 4a illustrates DMA module 302 annotated to include Visser's two cross filters. *Id.* Petitioner further asserts that Visser's filters are adapted during operation, such that the filters better separate speech from noise. *Id.* (citing Ex. 1006, 16:8–11, 21:17–18:44, Fig. 12). Accordingly, Petitioner concludes that "each of Visser's cross filters w_{12} and w_{21} describes a relationship for speech between at least a first physical microphone and a second physical microphone." *Id.* (citing Ex. 1003 ¶ 148).

Petitioner contends that one of ordinary skill would have combined Visser with Avendano in order to improve Avendano "by enabling the system to 'adapt' and 'learn' to separate speech . . . such that the system can accurately separate speech 'even in a changing acoustic environment.'" *Id.* at 16 (citing Ex. 1006, 16:65–17:4, Fig. 9; Ex. 1003 ¶ 104). In other words, Petitioner contends, "a POSITA would have been motivated to incorporate Visser's 'ICA process' into Avendano's system to further enhance the differences in speech content in Avendano's two processed signals, such that speech is detected with a greater degree of accuracy, 'even in a changing

acoustic environment.'" *Id.* at 18 (citing Ex. 1003 ¶ 112). This "modification would merely involve using a known technique (*e.g.*, using Visser's 'cross filters') to improve a similar device in a similar way," Petitioner contends. *Id.* at 20–21 (citing Ex. 1003 ¶ 119). And as "limited modifications would be necessary," Petitioner asserts that a POSITA would have had a reasonable expectation of success. *Id.* at 22 (citing Ex. 1003 ¶¶ 124–125).

Patent Owner contends that a POSITA would not have combined Visser with Avendano because the combination would not function for its intended purpose and because Visser teaches away. Prelim. Resp. 17 (citing Ex. 2002 ¶¶ 66–74). Patent Owner asserts that Petitioner relies on Visser's feedback "to produce the separated speech and noise channels that Petitioner relies on for its motivation to combine." *Id.* at 19 (citing Ex. 1006, 16:15–19; Pet. 17–19). Patent Owner further contends that "[a] POSITA would not believe that the filters would work for their intended purpose without the feedback circuitry." *Id.* at 19–20 (citing Ex. 2002 ¶¶ 70–73). Similarly, Patent Owner contends that "Visser teaches away from removing the feedback structure." *Id.* at 20 (citing Ex. 2002 ¶¶ 73–74).

On this record, we agree with Petitioner. Patent Owner does not challenge that Visser disclose this limitation, and we agree with Petitioner on this record that it does. We agree that "[e]ach of Visser's cross filters w_{12} and w_{21} describes a relationship for speech between a first physical microphone and a second physical microphone" since each cross filter functions to "distinguish speech from noise." Ex. 1003 ¶¶ 144, 148; *see* Ex. 1006, 17:29–44. We also agree with Petitioner that one of ordinary skill in the art would have combined Visser with Avendano so that the system can

accurately separate speech "even in a changing acoustic environment," with a reasonable expectation of success. Pet. 16, 22.

We find Patent Owner's assertion that the combination would not function for its intended purpose and that Visser teaches away unconvincing. Patent Owner's assertion relies on Visser's feedback structure being essential, but Patent Owner overlooks Visser's other disclosure permitting a non-feedback structure. *See* Prelim. Resp. 19–20. Specifically, although Visser proposes using infinite impulse response (IIR) filters for the cross filters, which use feedback, Visser also explains that finite impulse response (FIR) filters may be used instead. Ex. 1006, 17:51–55; Ex. 1003 ¶ 54. Visser explains that a FIR filter "is a filter whose output signal is not feedback [*sic*] as input." Ex. 1006, 17:54–55. On this record, this disclosure appears to undermine Patent Owner's argument that "[a] POSITA would not believe that the filters would work for their intended purpose without the feedback circuitry" and that "Visser teaches away from removing the feedback structure." Prelim. Resp. 19–20.

c. Summary as to Claim 14

Based on the preliminary record before us, Petitioner has shown a reasonable likelihood that claim 14 would have been obvious over the combination of Avendano and Visser.

4. Independent Claim 42

The parties raise similar arguments regarding independent claim 42. Pet. 42–43; Prelim. Resp. 20. For similar reasons as those stated above, we agree with Petitioner at this stage that the combination of Avendano and Visser would have rendered obvious claim 42.

5. Dependent Claims 15–17, 35–41

Petitioner contends that dependent claim 15–17 and 35–41 would have been obvious over the combination of Avendano and Visser. Pet. 35–42. Patent Owner does not specifically contest these claims at this stage. Prelim. Resp. 20. We leave for trial the issue of whether Petitioner establishes that Avendano and Visser would have rendered obvious claims 15–17 and 35–41.

E. Remaining Challenges

Petitioner's remaining challenges address solely dependent claims. *See* Pet. 1–2. We leave for trial the issue of whether these challenges establish unpatentability of these dependent claims.

V. CONCLUSION

At this stage of the proceeding, we determine that Petitioner has demonstrated a reasonable likelihood of prevailing on its challenges as to at least one challenged claim. At this preliminary stage, we have not made a final determination as to the patentability of the challenged claims or any underlying factual and legal issues.

VI. ORDER

Accordingly, it is

ORDERED that, pursuant to 35 U.S.C. § 314(a), an *inter partes* review of all challenged claims of the '213 patent is instituted with respect to all challenges to patentability set forth in the Petition;

FURTHER ORDERED that Petitioner's Motion for Joinder is *dismissed*; and

FURTHER ORDERED that pursuant to 35 U.S.C. § 314(c) and 37 C.F.R. § 42.4, notice is hereby given of the institution of a trial commencing on the entry date of this Decision.

For PETITIONER:

Indranil Mukerj
John C. Moulder
WILLKIE FARR & GALLAGHER LLP
imukerji@willkie.com
cmoulder@willkie.com

For PATENT OWNER:

Peter Lambrianakos
Vincent J. Rubino
Enrique W. Iturralde
Richard Cowell
Jacob Ostling
FABRICANT LLP
plambrianakos@fabricantllp.com
vrubino@fabricantllp.com
eiturralde@fabricantllp.com
rcowell@fabricantllp.com
jostling@brownrudnick.com