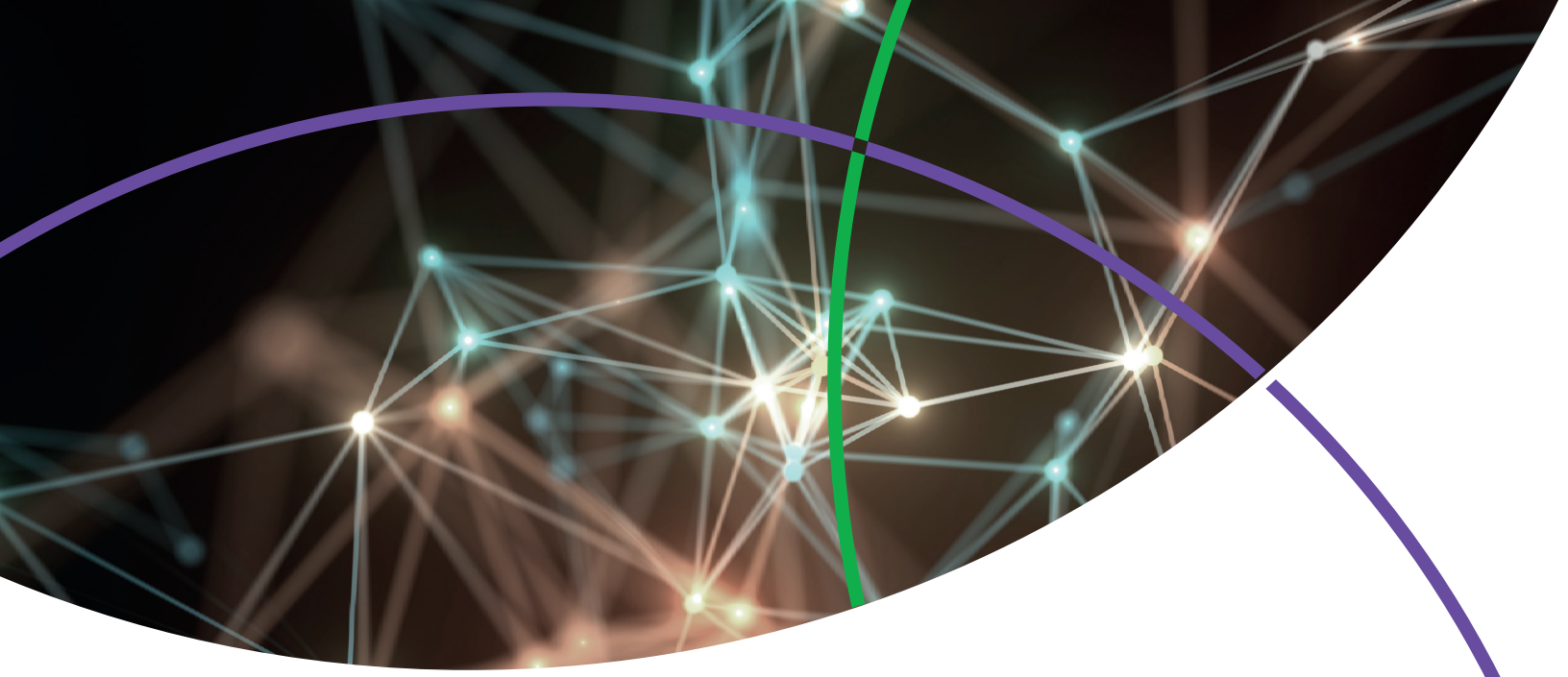

File Histories

The world's leading IP decision makers turn to us for one reason. Trust.

Good decisions require reliable intelligence. That's why more IP decision makers rely on us.

We empower companies to build and protect their valuable assets with services that span the full IP lifecycle. Our blend of global expertise, resources, and technology translates to results you can rely on with certainty. In any language, we're the name you can trust.

IP Services from Clarivate Analytics

Patent search and analytics

- Prior art search
- Patent watch
- Patent profiles

Patent licensing

- Patent-to-product mapping
- Standards mapping
- Licensing opportunity analysis
- Patent acquisition analysis
- Claims charting

Patent preparation and prosecution

- Patent drafting
- Prosecution services

IP analytics

- Technology landscaping
- Patent portfolio audit
- Competitive portfolio assessment

IP management

- Data validation services
- IP payments
- IP docketing
- IP management consulting
- Paralegal services
- Proofreading

Translation services and file histories

For more information, call us at +1-800-445-9760 or email **fhservice@clarivate.com**

Alexandria

+1 800 445 9760 (US)
+1 703 916 1500 (International)
filehistories.clarivate.com

IP 1702 300
07.2017
© 2017 Clarivate Analytics

clarivate.com

Clarivate Analytics

PETITIONER'S EXHIBIT 1002
US PATENT NO. 6,561,166

FILE HISTORY

US 6,561,166

PATENT:	6,561,166
INVENTORS:	HALLERON IAN
	DIXON JON
TITLE:	Purge fuel canister measurement method and system
APPLICATION NO:	US2001861983A
FILED:	16 MAY 2001
ISSUED:	13 MAY 2003
COMPILED:	19 SEP 2022

JC978 U.S. PTO
09/861983
05/16/01

ISSUE CLASSIFICATION	
Class	Subclass
123	519

PATENT NUMBER
6561166
6561166

U.S. UTILITY Patent Application

O.I.P.E.	PATENT DATE
SCANNED Hkm3 Q.A. AA	MAY 13 2003

APPLICATION NO.	CONT/PRIOR	CLASS	SUBCLASS	ART UNIT	EXAMINER
09/861983	D	123	519	3747	Huynh

APPLICANTS
Ian Halleron
Jon Dixon

BEST COPY

TITLE
Purge fuel canister measurement method and system

PTO-2040
12/99

ISSUING CLASSIFICATION

ORIGINAL		CROSS REFERENCE(S)						
CLASS	SUBCLASS	CLASS	SUBCLASS (ONE SUBCLASS PER BLOCK)					
123	519	B3	520	676	703	443		
INTERNATIONAL CLASSIFICATION		60	285					
F02M	33/04							
			☐ Continued on Issue Slip Inside File Jacket					

☐ TERMINAL DISCLAIMER

☐ The term of this patent subsequent to _____ (date) has been disclaimed.

☐ The term of this patent shall not extend beyond the expiration date of U.S Patent. No. _____

☐ The terminal ____ months of this patent have been disclaimed.

DRAWINGS			CLAIMS ALLOWED	
Sheets Drwg.	Figs. Drwg.	Print Fig.	Total Claims	Print Claim for O.G.
2	2	1	11	1

(Assistant Examiner) HAI HUYNH	2/8/03 (Date)
Henry C. Yuen Supervisory Patent Examiner Group 3700 (Primary Examiner)	2/8/03 (Date)
(Legal Instruments Examiner)	2/21/03 (Date)

NOTICE OF ALLOWANCE MAILED
2-13-03

ISSUE FEE

Amount Due	Date Paid
$ 1300	3-19-03

ISSUE BATCH NUMBER

WARNING:
The information disclosed herein may be restricted. Unauthorized disclosure may be prohibited by the United States Code Title 35, Sections 122, 181 and 368. Possession outside the U.S. Patent & Trademark Office is restricted to authorized employees and contractors only.

Form PTO-436A
(Rev. 6/99)

FILED WITH: ☐ DISK (CRF) ☐ FICHE ☐ CD-ROM
(Attached in pocket on right inside flap)

Issue Fee

Formal Drawings

(FACE)

6,561,166

Purge fuel canister measurement method and system

Transaction History

Date	Transaction Description
05-16-2001	Workflow - Drawings Finished
05-16-2001	Workflow - Drawings Matched with File at Contractor
05-16-2001	Information Disclosure Statement (IDS) Filed
05-16-2001	Information Disclosure Statement (IDS) Filed
05-16-2001	Initial Exam Team nn
07-19-2001	Correspondence Address Change
07-20-2001	Application Dispatched from OIPE
08-07-2001	Case Docketed to Examiner in GAU
12-03-2001	Information Disclosure Statement (IDS) Filed
12-03-2001	Information Disclosure Statement (IDS) Filed
07-09-2002	Non-Final Rejection
07-10-2002	Mail Non-Final Rejection
10-15-2002	Response after Non-Final Action
10-22-2002	Date Forwarded to Examiner
12-30-2002	Mail Final Rejection (PTOL - 326)
12-30-2002	Final Rejection
01-28-2003	Response after Final Action
02-01-2003	Date Forwarded to Examiner
02-13-2003	Mail Notice of Allowance
02-13-2003	Notice of Allowance Data Verification Completed
02-21-2003	Dispatch to Publications
02-25-2003	Workflow - File Sent to Contractor
02-25-2003	Receipt into Pubs
03-19-2003	Issue Fee Payment Verified
03-19-2003	Issue Fee Payment Received
03-28-2003	Receipt into Pubs
04-03-2003	Application Is Considered Ready for Issue
04-07-2003	Receipt into Pubs
04-24-2003	Issue Notification Mailed
05-13-2003	Recordation of Patent Grant Mailed
05-13-2003	Patent Issue Date Used in PTA Calculation
09-06-2017	File Marked Found
09-29-2017	File Marked Found
05-14-2018	Petition Requesting Trial
10-02-2018	Termination or Final Written Decision
02-14-2020	Petition Requesting Trial
03-24-2020	Correspondence Address Change
03-31-2020	Email Notification
03-31-2020	Change in Power of Attorney (May Include Associate POA)
09-09-2020	Request for Trial Granted
04-12-2021	Termination or Final Written Decision

PATENT APPLICATION

09861983

JC978 U.S. PTO
09/861983
05/16/01

JUN 07 0116

INITIALS _____

CONTENTS

		Date Received (Incl. C. of M.) or Date Mailed
1.	Application papers. 2 PRINTS	
2.	I.D.S.	5-16-01
3.	Suppl IDS	12-3-01
4.	Rejection (3)	7-10-02
5.	Amdt. A cofm (10-10-02)	10-15-02
6.	12/30 Final Rejection (3)	12-30-02
7.	Amdt/B AE	1-28-03
8.	Notice of Allowability	2-13-03
9.	Formal Drawings (2 shts) set	5/16/01
10.		
11.		
12.		
13.		
14.		
15.		
16.		
17.		
18.		
19.		
20.		
21.		
22.		
23.		
24.		
25.		
26.		
27.		
28.		
29.		
30.		
31.		
32.		
33.		
34.		
35.		
36.		
37.		
38.		
39.		
40.		
41.		
42.		
43.		
44.		
45.		
46.		
47.		
48.		
49.		
50.		
51.		
52.		
53.		
54.		
55.		
56.		
57.		
58.		
59.		
60.		
61.		
62.		
63.		
64.		
65.		
66.		
67.		
68.		
69.		
70.		
71.		
72.		
73.		
74.		
75.		
76.		
77.		
78.		
79.		
80.		
81.		
82.		

(LEFT OUTSIDE)

PETITIONER'S EXHIBIT 1002
US PATENT NO. 6,561,166

ISSUE SLIP STAPLE AREA (for additional cross references)

POSITION	INITIALS	ID NO.	DATE
FEE DETERMINATION	Merritt		5/03/01
O.I.P.E. CLASSIFIER		59	671
FORMALITY REVIEW	AM	917	07-27-01
RESPONSE FORMALITY REVIEW			

INDEX OF CLAIMS

✓ ..... Rejected
= ..... Allowed
— (Through numeral)... Canceled
÷ ..... Restricted
N ..... Non-elected
I ..... Interference
A ..... Appeal
O ..... Objected

Claim Final	Claim Original	Date 7 8 02	Date 12 28 02	Date 2 8 03
1	1	✓	=	=
2	2			
3	3			
4	4			
5	5			
6	6			
7	7			
8	8			
9	9			
10	10			
11	11		—	=
	12		✓	C
	13		✓	
	14		C	
	15		C	
	16		✓	
	17			
	18			
	19			
	20			
	21			
	22			
	23	✓	✓	C
	24			
	25			
	26			
	27			
	28			
	29			
	30			
	31			
	32			
	33			
	34			
	35			
	36			
	37			
	38			
	39			
	40			
	41			
	42			
	43			
	44			
	45			
	46			
	47			
	48			
	49			
	50			

Claim Final	Claim Original	Date
	51	
	52	
	53	
	54	
	55	
	56	
	57	
	58	
	59	
	60	
	61	
	62	
	63	
	64	
	65	
	66	
	67	
	68	
	69	
	70	
	71	
	72	
	73	
	74	
	75	
	76	
	77	
	78	
	79	
	80	
	81	
	82	
	83	
	84	
	85	
	86	
	87	
	88	
	89	
	90	
	91	
	92	
	93	
	94	
	95	
	96	
	97	
	98	
	99	
	100	

Claim Final	Claim Original	Date
	101	
	102	
	103	
	104	
	105	
	106	
	107	
	108	
	109	
	110	
	111	
	112	
	113	
	114	
	115	
	116	
	117	
	118	
	119	
	120	
	121	
	122	
	123	
	124	
	125	
	126	
	127	
	128	
	129	
	130	
	131	
	132	
	133	
	134	
	135	
	136	
	137	
	138	
	139	
	140	
	141	
	142	
	143	
	144	
	145	
	146	
	147	
	148	
	149	
	150	

If more than 150 claims or 10 actions staple additional sheet here

(LEFT INSIDE)

2449 7/2001

[redacted]

SEARCHED

Class	Sub.	Date	Exmr.
123	519	7/1/02	HHH
	* 520		
	295		
	* 676		
	* 703		
	* 443		
	698		
701	109		
60	* 285		
up	date	search	
		12/21/02	HHH
		2/8/03	HHH
761	103		
	164		

SEARCH NOTES
(INCLUDING SEARCH STRATEGY)

East

Date	Exmr.
7/1/02	HHH
12/21/02	HHH
2/8/03	HHH

INTERFERENCE SEARCHED

Class	Sub.	Date	Exmr.
above		search	
		2/8/03	HHH

	Type	L #	Hits	Search Text	DBs	Time Stamp	Comments	ErrorDefinition	Errors
1	BRS	L1	1	stratified same homogeneous same (nox near trap) same temperature same (fuel near (evaporat$3 or vapor or purg$3))	USPAT; US-PGPUB; EPO; JPO; DERWENT	2003/02/08 12:27			0

	Type	L #	Hits	Search Text	DBs	Time Stamp	Comments	ErrorDefinition	Errors
1	BRS	L4	9	(stratified same homogeneous) and ((purg$3 or evaporat$3 or vapor) near fuel) and (temperature near nox adj trap)	USPAT; US-PGPUB; EPO; JPO; DERWENT	2002/12/21 15:40			0
2	BRS	L5	16	(stratified same homogeneous) and ((purg$3 or evaporat$3 or vapor) near fuel) and (temperature near trap)	USPAT; US-PGPUB; EPO; JPO; DERWENT	2002/12/21 15:40			0
3	BRS	L6	10	(stratified same homogeneous) and ((purg$3 or evaporat$3 or vapor) near fuel) and (temperature near nox)	USPAT; US-PGPUB; EPO; JPO; DERWENT	2002/12/21 15:40			0

	Type	L #	Hits	Search Text	DBs	Time Stamp	Comments	ErrorDefinition	Errors
1	BRS	L1	1	stratified same homogeneous same ((purg$3 or evaporat$3 or vapor) near fuel) same (temperature near (nox adj trap))	USPAT; US-PGPUB; EPO; JPO; DERWENT	2002/12/21 14:59			0
2	BRS	L2	0	stratified same homogeneous same ((purg$3 or evaporat$3 or vapor) near fuel) same (temperature near (trap))	USPAT; US-PGPUB; EPO; JPO; DERWENT	2002/12/21 14:59			0
3	BRS	L3	1	stratified same homogeneous same ((purg$3 or evaporat$3 or vapor) near fuel) same (temperature near (nox))	USPAT; US-PGPUB; EPO; JPO; DERWENT	2002/12/21 14:59			0

	Type	L #	Hits	Search Text	DBs	Time Stamp	Comments	ErrorDefinition	Errors
1	BRS	L1	6	stratified same homogeneous same (evaporated or vapor) same fuel same catalyst same temperature	USPAT; US-PGPUB; EPO; JPO; DERWENT	2002/07/01 11:38			0
2	BRS	L2	20	stratified same homogeneous and (evaporated or vapor) same fuel and catalyst same temperature	USPAT; US-PGPUB; EPO; JPO; DERWENT	2002/07/01 11:39			0
3	BRS	L3	3	123/519 and (stratified same homogeneous) and (catalyst same temperature)	USPAT; US-PGPUB	2002/07/01 11:39			0
4	BRS	L4	13	123/520 and (stratified same homogeneous) and (catalyst same temperature)	USPAT; US-PGPUB	2002/07/01 11:40			0
5	BRS	L5	20	123/295 and (stratified same homogeneous) and (catalyst same temperature)	USPAT; US-PGPUB	2002/07/01 11:40			0
6	BRS	L7	12	123/676 and (stratified same homogeneous)	USPAT; US-PGPUB	2002/07/01 11:41			0

	Type	L #	Hits	Search Text	DBs	Time Stamp	Comments	ErrorDefinition	Errors
7	BRS	L8	0	123/703 and (stratified same homogeneous)	USPAT; US-PGPUB	2002/07/01 11:41			0
8	BRS	L9	27	123/443 and (catalyst same temperature)	USPAT; US-PGPUB	2002/07/01 11:42			0
9	BRS	L10	31	123/698 and (catalyst same temperature)	USPAT; US-PGPUB	2002/07/01 11:42			0
10	BRS	L11	17	123/698 and (homogeneous same stratified)	USPAT; US-PGPUB	2002/07/01 11:44			0
11	BRS	L12	8	701/109 and (homogeneous same stratified)	USPAT; US-PGPUB	2002/07/01 11:46			0
12	BRS	L13	45	60/285 and (homogeneous same stratified)	USPAT; US-PGPUB	2002/07/01 11:46			0

US006561166B2

(12) **United States Patent**
Halleron et al.

(10) **Patent No.: US 6,561,166 B2**
(45) **Date of Patent: May 13, 2003**

(54) **PURGE FUEL CANISTER MEASUREMENT METHOD AND SYSTEM**

(75) Inventors: **Ian Halleron**, Chelmsford (GB); **Jon Dixon**, Maldon (GB)

(73) Assignee: **Visteon Global Technologies, Inc.**, Dearborn, MI (US)

(*) Notice: Subject to any disclaimer, the term of this patent is extended or adjusted under 35 U.S.C. 154(b) by 0 days.

(21) Appl. No.: **09/861,983**

(22) Filed: **May 16, 2001**

(65) **Prior Publication Data**

US 2001/0052339 A1 Dec. 20, 2001

Related U.S. Application Data

(60) Provisional application No. 60/211,085, filed on Jun. 13, 2000.

(51) **Int. Cl.**[7] **F02M 33/04**

(52) **U.S. Cl.** **123/519**; 123/520; 123/676; 123/703; 123/443; 60/285

(58) **Field of Search** 123/519, 520, 123/295, 676, 703, 443, 698; 701/109, 103, 104; 60/285

(56) **References Cited**

U.S. PATENT DOCUMENTS

4,986,070	A *	1/1991	Abe	123/520
5,245,975	A *	9/1993	Ito	123/520
5,426,938	A	6/1995	Ogawa et al.	
6,176,217	B1 *	1/2001	Ohkuma et al.	123/295
6,192,672	B1 *	2/2001	Kerns	123/520
6,209,526	B1	4/2001	Sun et al.	

FOREIGN PATENT DOCUMENTS

EP	0488 254 A1	6/1992	
EP	1074706 A2	2/2001	
JP	6137223	5/1994	
JP	21606 *	1/2002	F02D/41/04
WO	WO 94/20738	9/1994	
WO	WO 99/14482	3/1999	
WO	WO 99/32766	7/1999	

* cited by examiner

Primary Examiner—Henry C. Yuen
Assistant Examiner—Hai H. Huynh
(74) *Attorney, Agent, or Firm*—Brinks Hofer Gilson & Lione

(57) **ABSTRACT**

An engine controller system for a direct injection spark ignited internal combustion engine that is capable of operating a stratified mode where fuel is injected during a compression stroke of the engine and a homogeneous mode where fuels is injected during an intake stroke of the engine. The engine controller monitors adjusts the flow rate of the evaporated fuel vapors as a function of the catalyst temperature and the fuel level in the evaporated fuel vapors. The engine controller determines the fuel level in the evaporated fuel vapors as a function of the exhaust gas oxygen senor output.

11 Claims, 2 Drawing Sheets

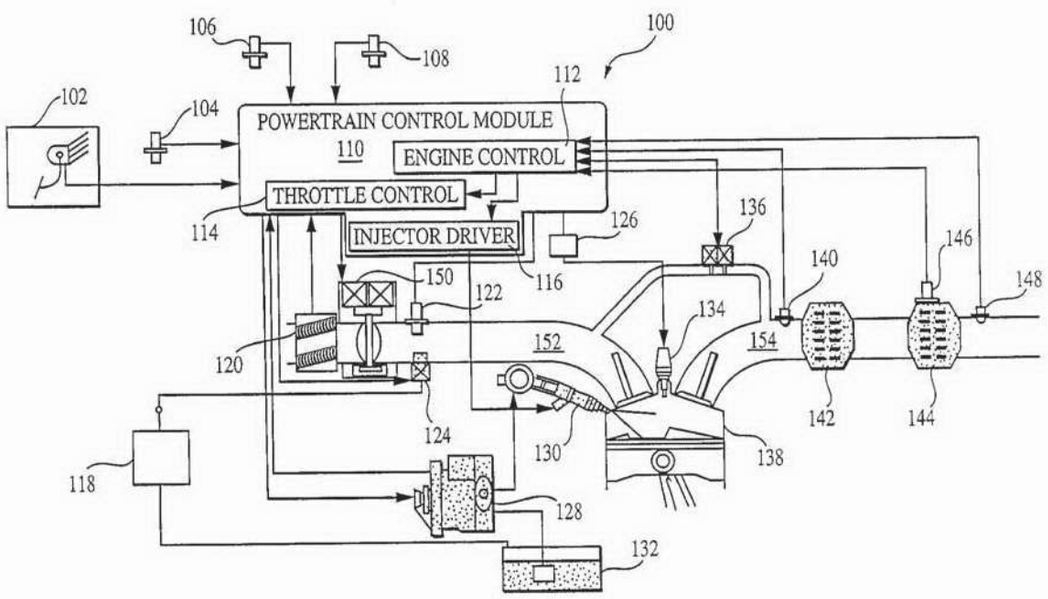

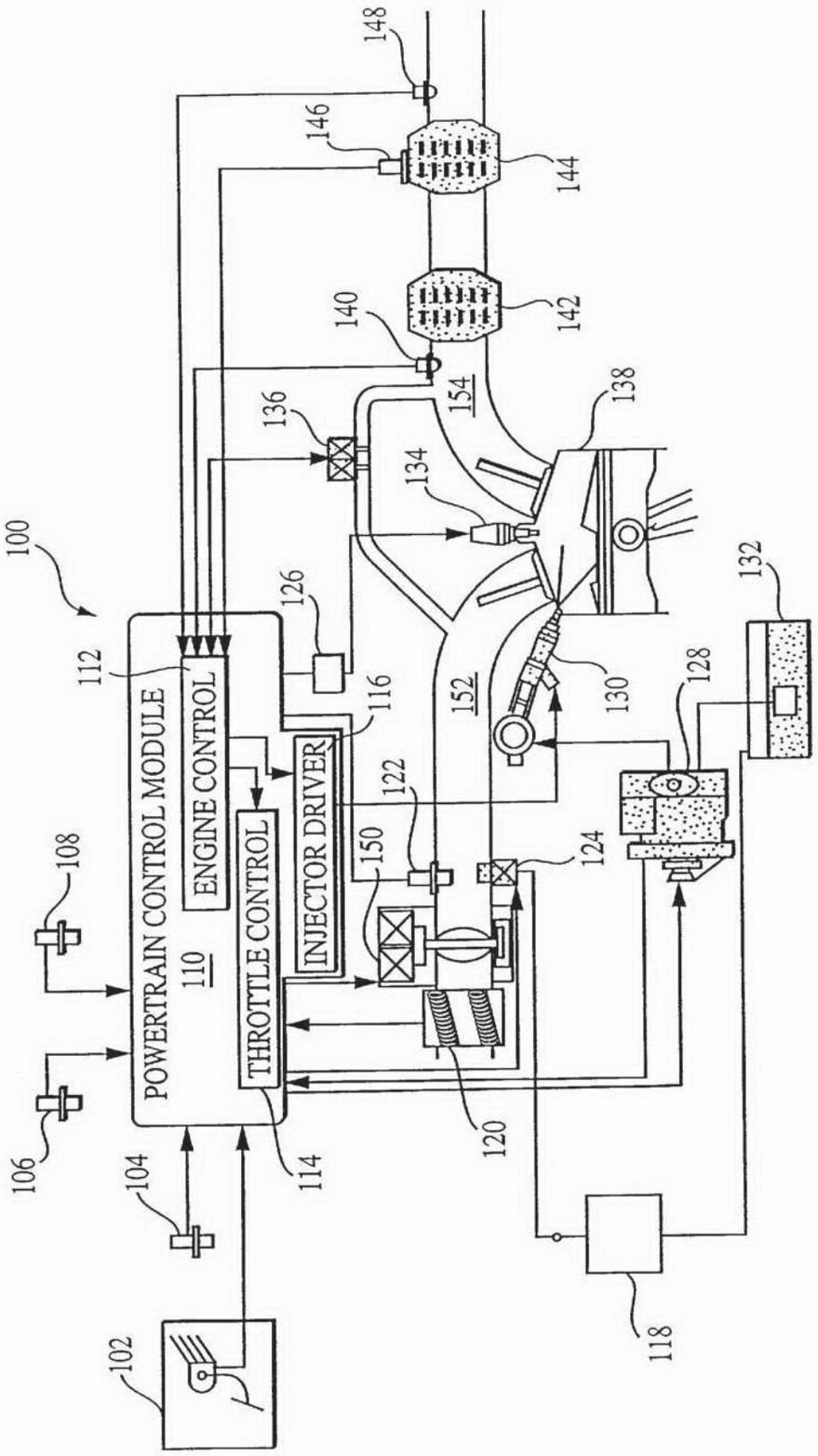
100
POWERTRAIN CONTROL MODULE
110
ENGINE CONTROL
THROTTLE CONTROL
INJECTOR DRIVER
102
104
106
108
112
114
116
118
120
122
124
126
128
130
132
134
136
138
140
142
144
146
148
150
152
154

Figure 1

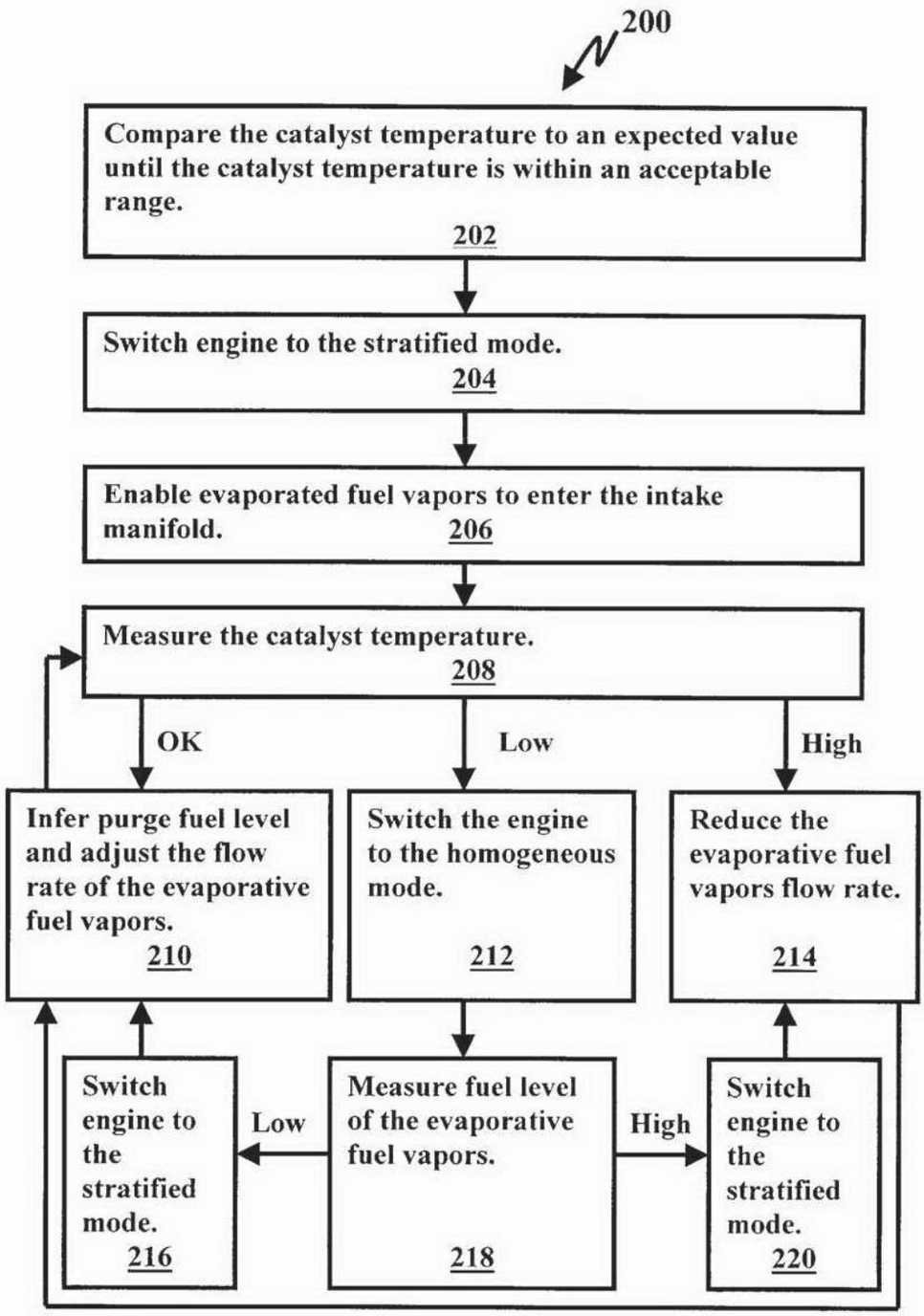
200
Compare the catalyst temperature to an expected value until the catalyst temperature is within an acceptable range.
202
Switch engine to the stratified mode.
204
Enable evaporated fuel vapors to enter the intake manifold.
206
Measure the catalyst temperature.
208
OK
Low
High
Infer purge fuel level and adjust the flow rate of the evaporative fuel vapors.
210
Switch the engine to the homogeneous mode.
212
Reduce the evaporative fuel vapors flow rate.
214
Switch engine to the stratified mode.
216
Low
Measure fuel level of the evaporative fuel vapors.
218
High
Switch engine to the stratified mode.
220

Figure 2

PURGE FUEL CANISTER MEASUREMENT METHOD AND SYSTEM

REFERENCE TO RELATED APPLICATION

This application claims the benefit of U.S. Provisional Application No. 60/211,085, filed Jun. 13, 2000, titled "Measurement of Canister Purge Fuel Content in a Stratified Direct Injection Gasoline Engine."

BACKGROUND

This invention relates generally to the field of gasoline-based internal combustion engines and more specifically to direct injection engines.

Direct injection engines, also called "in-cylinder injection engines," inject fuel directly into the cylinders. Diesel engines commonly use direct injection. Gasoline engines, also called spark ignition engines, normally are port fuel injection engines that inject fuel via a carburetor or a fuel injector into the intake manifold or over the intake values into the cylinders. Recently, direct injection spark ignited ("DISI") engines have been proposed. A DISI engine requires the fuel to be injected at relatively high pressure. Such a DISI engine also requires that the air-fuel ratio be leaner than convention gasoline engines and the air-fuel ratio must remain within tighter margins.

DISI engines operate in a stratified mode or a homogenous mode. When a DISI engine is in the stratified mode, the combustion chambers contain stratified layers with different air/fuel mixtures. The strata closest to the spark plug contains a stoichiometric mixture, that is a slightly richer mixture, and subsequent strata contain progressively leaner mixtures. When the engine is in the homogeneous mode, a homogeneous mixture of air and fuel is injected into the combustion chamber. Homogeneous operation may be either lean of stoichiometry, at stoichiometry, or rich of stoichiometry.

When a DISI engine operates in the stratified mode, the fuel is injected late in the compression cycle, usually during a compression stroke. Because of the late injection, a very short time is available for mixing of the air and fuel in the cylinder. Stable combustion is obtained because the rich zone air/fuel mixture near the spark plug is within the combustion limits while the overall air/fuel mixture in the cylinder is leaner than the air/fuel mixture normally used when the engine is in the homogeneous mode. When the engine is in the homogeneous mode, fuel is injected during an intake stroke of the engine. More mixing time is available in the homogenous mode. The stratified mode is more fuel efficient than the homogenous mode.

Direct injection engines are commonly coupled to three-way catalytic converters to reduce CO, HC, and NOx emissions. When operating at air/fuel mixtures lean of stoichiometry, an NOx trap or an NOx catalyst is typically coupled downstream of the three-way catalytic converter to further reduce NOx emissions. The stratified mode may be used for light to medium loads and the homogeneous mode may be used for medium to heavy loads.

Gasoline engines typically collect evaporated fuel vapors from the gasoline tank in a carbon canister, also called a charcoal canister or an evaporative canister. The evaporated fuel vapors are purged from the carbon canister into the intake manifold and burned in the combustion chambers, that is in the cylinders, along with the fuel that is injected via the fuel injectors. Since the air-fuel ratio of the evaporated fuel vapors is not known, the net air-fuel ratio in the cylinder

or in a strata in the cylinder is not known. Thus, it is desirable to measure the air-fuel ratio of the evaporated fuel vapors and control the air-fuel ratio injected into the combustion chambers accordingly. Traditionally, the fuel level of the evaporated fuel vapors is measured with an exhaust gas oxygen sensor, such as a switching HEGO sensor or a linear UEGO sensor. When the engine is running lean, the exhaust gas oxygen sensor may not be able to accurately detect the fuel level of the evaporated fuel vapors.

As gasoline engines become more efficient, that is they are run leaner, the exhaust gas sensors become less accurate or stop working. For example, a DISI engine operating in the stratified mode uses a much leaner mixture than when it is operating in the homogenous mode. The evaporated fuel vapors, which need to be burned, contain a homogenous mixture of air and fuel. However, the fuel level in the evaporated fuel vapors varies over time. Thus, traditional engines often shut off the flow of evaporated fuel vapors when the engine is running lean, for example in the stratified mode. Shut off of the flow of the evaporated fuel vapors limits the efficiency of the engine by limiting the time the traditional engine can be operated in the stratified mode.

Further, when a traditional DISI engine running in the stratified mode purges evaporated fuel vapors into the combustion chamber, the strata outside the rich stratified zone may be too lean to support combustion. This may result in large quantities of unburned fuel in the exhaust gas, which may result in an undesirable large exothermic reaction in the catalyst as the catalyst oxidizes the unburned fuel. If the evaporated fuel vapors contain too much fuel, making the mixture too rich, the torque produced by the engine undesirably increases.

SUMMARY

An engine controller for a direct injection spark ignited internal combustion engine can operate in a stratified mode where fuel is injected during a compression stroke of the engine and a homogeneous mode where fuels is injected during an intake stroke of the engine. The engine controller adjusts the flow rate of evaporated fuel vapors as a function of the catalyst temperature and the fuel level in the evaporated fuel vapors. The engine controller determines the fuel level in the evaporated fuel vapors as a function of the exhaust gas oxygen senor output.

The improved system and method of controlling a direct injection spark ignition engine is described. The improved system and method may use sensors that are found on existing DISI engines to indirectly measure the fuel level in the evaporated fuel vapors. The improved system and method allows the evaporated fuel vapors to be purged into the intake manifold when the engine is run lean. Thus, the engine operates longer in the more efficient stratified mode resulting in a lower fuel consumption.

The foregoing discussion has been provided only by way of introduction. Nothing in this section should be taken as a limitation on the following claims, which define the scope of the invention.

BRIEF DESCRIPTION OF THE DRAWINGS

The components in the figures are not necessarily to scale, emphasis instead being placed upon illustrating the principles of the invention. Moreover, in the figures, like reference numerals designate corresponding parts throughout the different views.

FIG. 1 illustrates a direct injection engine with an improved evaporated fuel vapors control system; and

FIG. **2** illustrates a flow diagram of a method of controlling the direct injection engine of FIG. **1**.

DETAILED DESCRIPTION

A. Definitions

AFR—Air to Fuel Ratio. The air to fuel ratio may be the mass of Air divided by the mass of fuel.

CFD—Computational Fluid Dynamics

CTS—Catalyst Temperature Sensor

DI—Direct Injection

DISI—Direct Injection Spark Ignition

EFC—Electronic Flow Control

EG—Exhaust Gas

EGR—Exhaust Gas Re-circulation

EGO—Exhaust Gas Oxygen

EMVA—Electro-Mechanical Valve Actuation

ETC—Electronic Temperature Control

HEGO—Heated Exhaust Gas Oxygen

MAP—Manifold Absolute Pressure

OHC—Overhead Cam

PCV—Positive Crankcase Ventilation

PFI—Port Fuel Injection

SI—Spark Ignited

SIDI—Spark Ignition Direct-injection

SOHC—Single Overhead Cam

Stoichiometric combustion—An ideal combustion in which the fuel is completely burned. In a stoichiometric combustion, all the Carbon is converted to CO2, all hydrogen is converted to H2O, and all the sulfur is converted to SO2.

TWC—Three-Way Catalyst or Three-Way Catalytic converter

UEGO—Universal Exhaust Gas Oxygen

B. Introduction

The improved system and method of controlling a direct injection spark ignition engine is described. The improved system and method may use sensors that are found on existing DISI engines to indirectly measure the fuel level in the evaporated fuel vapors. The improved system and method allows the evaporated fuel vapors to be purged into the intake manifold when the engine is run lean. Thus, the engine operates longer in the more efficient stratified mode resulting in a lower fuel consumption.

The following description of the preferred embodiments of the invention is not intended to limit the scope of the invention to these preferred embodiments, but rather to enable any person skilled in the art to make and use the invention.

C. Direct Injection System

FIG. **1** illustrates an embodiment of a direct injection spark ignition ("DISI") engine **100**. The DISI engine **100** may include such components as an accelerator pedal and sensor assembly **102**, a crank angle sensor **104**, a CAM position sensor **106**, an engine coolant sensor **108** or cylinder head temperature sensor **108**, a powertrain control module **110**, an engine control module **112**, a throttle control module **114**, an injector driver module **116**, a carbon canister **118**, a temperature/mass air flow meter **120**, a MAP sensor **122**, a vapor management valve **124**, an ignition control **126**, a fuel pump **128**, a fuel injector **130**, a fuel tank **132**, a spark plug **134**, an exhaust gas re-circulation ("EGR") valve **136**, a high compression engine **138**, a universal exhaust gas oxygen ("UEGO") sensor **140**, a three-way catalytic converter ("TWC") **142**, a NOx trap/catalyst **144**, a catalyst temperature sensor ("CTS") **146**, a heated exhaust gas oxygen ("HEGO") sensor **148**, a throttle **150**, an intake manifold **152**, and an exhaust manifold **154**.

The evaporative fuel vapor system captures evaporative fuel vapors from the gasoline tank **132**, stores the evaporative fuel vapor in the canister **118**, and releases the vapors into the intake manifold **152** via the vapor management valve **124**. The vapor management valve **124** may be controlled by the engine controller **112**. The evaporative fuel vapors tend to be a homogeneous mixture of fuel vapors and air. The fuel level in the evaporative fuel vapors varies over time. The vapor management valve **124** may release the evaporative fuel vapors into the intake manifold **152**. Then the evaporative fuel vapors enter the combustion chamber via an intake valve. The fuel injector **130** injects fuel directly into the combustion chamber. The injected fuel and the evaporative fuel vapors mix before combustion. The exhaust gases resulting from the combustion are exhausted via an exhaust valve into the exhaust manifold **154**. The CTS **146** is located near the lean NOx trap/catalyst **144** and measures the temperature of the lean NOx trap/catalyst **144** during the cleansing of the wash coat of SOx to control poisoning.

The engine **100** is controlled by various engine controllers including the power train control module **110**. The power train control module **110** may in include such controllers as an engine control **112**, a throttle control **114**, and an injector driver **116**. For example, the power train control module **110** may include a canister purge valve controller for a direct injection spark ignited internal combustion engine that includes a temperature sensor interface that receives a temperature of a catalyst in the engine's exhaust system, an engine mode controller that switches the engine between a stratified mode and a homogeneous mode, and a canister purge valve interface that controls a flow rate of evaporated fuel vapors into the engine's intake manifold via a canister purge valve. The canister purge valve controller may control the flow rate of evaporated fuel vapors as a function of the temperature received by the temperature sensor interface and the engine's mode.

The components of the DISl engine **100** may include various variations of the devices described above. The fuel pump **128** may include a high pressure fuel pump, an electronically controlled pressure regulator, and a pressure sensor assembly. The fuel injector **130** may include a high pressure fuel rail assembly. The fuel tank **132** may include a feed pump. The EGR valve **136** may include an electric EGR valve. The engine **138** may include multiple cylinders, each with a direct injection fuel injector. The TWC **142** may include a quick light-off TWC. The NOx trap/catalyst **144** may include a lean NOx trap, a lean NOx catalyst, or other device to reduce NOx in the exhaust gas. The throttle **150** may include an electronic controlled throttle. Other variations in the components of the DISI engine **100** will also be apparent and within the scope of the invention.

FIG. **2** illustrates a flow diagram of a method of controlling the DISI engine **100** of FIG. **1**.

In block **202**, the CTS **146** (FIG. **1**) is tested to determine if it is operating within calibration limits without evaporated fuel vapors being introduced into the combustion chamber. The engine **100** (FIG. **1**) may be in the homogeneous mode or the stratified mode during the calibration. The calibration includes comparing the catalyst temperature as measured by the CTS to an expected range. If the engine **100** is outside the calibration range, the engine **100** may be operated in the stratified mode with the evaporative fuel vapors turned off and in the homogeneous mode with the evaporative fuel vapors on or off. The activities in block **204** to **220** are not executed when the engine **100** is operating outside the calibration range.

In block **204**, if the engine **100** is in the homogeneous mode, the engine **100** is switched to the stratified mode. The engine control **112** (FIG. **1**) may control the mode of operation of the engine **100**.

In block **206**, the evaporated fuel vapors from the carbon canister **118** (FIG. **1**) are allowed to enter the intake manifold **152** (FIG. **1**). The flow rate of the evaporated fuel vapors may be controlled by the vapor management valve **124** (FIG. **1**) and the engine control **112**.

In block **208**, the temperature of the catalyst is measured when the evaporated fuel vapors are being introduced into the combustion chamber. The temperature of the catalyst may be measured by the CTS **146**. The catalyst temperature should rise after the evaporated fuel vapors are introduced due to the oxidation of the unburned fuel in the exhaust gas. The catalyst temperature change can be determined as the temperature difference between the temperature measured in block **208** and the temperature measured in block **202** or as the temperature difference between the temperature measured in block **208** and an expected temperature based on a temperature model.

In block **210**, if the catalyst temperature change from block **208** is within an acceptable range, the engine can remain in the stratified mode with the evaporated fuel vapors being introduced, and the fuel level of the evaporated fuel vapors can be determined as a function of the temperature change measured in block **208**. The acceptable range may have different upper and lower thresholds depending on various factors.

In block **214**, if the catalyst temperature change from block **208** is above the acceptable range, the evaporated fuel vapors contain too much fuel. The flow rate of the evaporated fuel vapors may be adjusted, normally reduced, to allow some of the evaporated fuel vapors to be purged while maintaining the engine **100** in the stratified mode. The flow rate can be repeatedly reduced in block **214** until the catalyst temperature is within an acceptable range. Alternatively, the engine **100** could be switched to the homogeneous mode with the evaporated fuel vapors being purged at the same rate until the fuel level in the evaporated fuel vapors is reduced to an acceptable level for operation in the stratified mode.

In block **212**, if the catalyst temperature change from block **208** is below the acceptable range, the fuel level in the evaporated fuel vapors is either low or very high. If the fuel level in the evaporated fuel vapors is very high, the entire stratified charge becomes combustible. To determine whether the fuel level in the evaporated fuel vapors is low or very high, the engine **100** is switched to the homogeneous mode, then block **218** is executed.

In block **218**, after the engine **100** is switched to the homogeneous mode in block **212**, the fuel level of the evaporated fuel vapors can be accurately measured via an EGO sensor, for example an UEGO. Then either block **216** or **218** is executed based on whether the EGO sensor indicates a high or low level of fuel in the evaporative fuel vapors.

In block **216**, if the fuel level of the evaporated fuel vapors measured in block **218** is below a fuel level threshold, the engine is switched back to the stratified mode. Then, the purge fuel level is determined as a function of the catalyst temperature in block **210**.

In block **220**, if the fuel level of the evaporated fuel vapors measured in block **218** is above the fuel level threshold, the engine is switched back to the stratified mode. Then, the flow rate of the evaporated fuel vapors is reduced in block **214**. Alternatively, the engine **100** could be operated in the homogeneous mode with the evaporated fuel vapors being purged at the same rate until the fuel level in the evaporated fuel vapors is reduced to an acceptable level for operation in the stratified mode.

The process or portions of the process described in blocks **202** to **220** may be repeated a number of times. Further, the process described in blocks **202** to **220** may be a component of a larger process that cycles the engine between the stratified mode and the homogeneous mode based on other factors, such as engine load, acceleration, and other factors.

As a person skilled in the art will recognize from the previous description and from the figures and claims, modifications and changes can be made to the preferred embodiments of the invention without departing from the scope of the invention defined in the following claims.

What is claimed is:

1. A method of controlling a direct injection spark ignited internal combustion engine that is capable of operating in a stratified mode where fuel is injected during a compression stroke of the engine and a homogeneous mode where fuels is injected during an intake stroke of the engine, the internal combustion engine having a catalytic converter and an NO_x trap, comprising:

measuring a first temperature of an NO_x trap that is in contact with an exhaust gas exhausted from a combustion chamber while the engine is operating in the stratified mode;

enabling evaporated fuel vapors to enter the combustion chamber at a flow rate while the engine is operating in the stratified mode;

measuring a second temperature of the NO_x trap while the engine is operating in the stratified mode; and

adjusting the flow rate of the evaporated fuel vapors as a function of the second temperature when the second temperature is within a lower temperature threshold and an upper temperature threshold.

2. The method of claim **1**, further comprising:

switching the engine to the homogeneous mode when the second temperature is below the lower temperature threshold.

3. The method of claim **2**, further comprising:

measuring a fuel level of the evaporated fuel vapors after the switching the engine to the homogeneous mode.

4. The method of claim **3**, wherein the measuring the fuel level comprises measuring the fuel level via an exhaust gas oxygen sensor.

5. The method of claim **4**, wherein the measuring the fuel level comprises measuring the fuel level with an universal exhaust gas oxygen sensor.

6. The method of claim **5**, further comprising:

switching the engine to the stratified mode when the measured fuel level in the evaporated fuel vapors is above a fuel level threshold.

7. The method of claim **6**, further comprising lowering the flow rate after switching the engine to the stratified mode.

8. The method of claim **5**, further comprising:

switching the engine to the stratified mode when the measured fuel level in the evaporated fuel vapors is below the fuel level threshold; and

adjusting the flow rate as a function of the second temperature.

9. The method of claim **8**, further comprising:

lowering the lower temperature threshold after switching to the stratified mode.

10. The method of claim **9**, repeating the method of controlling a direct injection spark ignited internal combustion engine with the lowered lower temperature threshold.

11. The method of claim **1**, further comprising:

reducing the flow rate of the evaporated fuel vapors into the combustion chamber as a function of the difference between the first and second temperatures when the NO_x trap temperature exceeds the upper temperature threshold.

* * * * *

UNITED STATES PATENT AND TRADEMARK OFFICE

COMMISSIONER FOR PATENTS
UNITED STATES PATENT AND TRADEMARK OFFICE
WASHINGTON, D.C. 20231
www.uspto.gov

Bib Data Sheet

CONFIRMATION NO. 6796

SERIAL NUMBER	FILING DATE	CLASS	GROUP ART UNIT	ATTORNEY DOCKET NO.
09/861,983	05/16/2001 RULE	123	3747	10541/388-1

APPLICANTS

Ian Halleron, Chelmsford, UNITED KINGDOM;
Jon Dixon, Maldon, UNITED KINGDOM;

**** CONTINUING DATA ***************************

THIS APPLN CLAIMS BENEFIT OF 60/211,085 06/13/2000
Yes HH

**** FOREIGN APPLICATIONS *********************

None HH

IF REQUIRED, FOREIGN FILING LICENSE GRANTED
** 07/19/2001

Foreign Priority claimed	STATE OR COUNTRY	SHEETS DRAWING	TOTAL CLAIMS	INDEPENDENT CLAIMS
☐ yes ☑ no	UNITED KINGDOM	2	24	3

35 USC 119 (a-d) conditions met: ☐ yes ☑ no ☐ Met after Allowance HH

Verified and Acknowledged: _____ Examiner's Signature _____ Initials

ADDRESS

Steven L. Oberholtzer
BRINKS HOFER GILSON & LIONE
P.O. Box 10395
Chicago ,IL 60610

TITLE

Purge fuel canister measurement method and system

FILING FEE RECEIVED	FEES: Authority has been given in Paper	
782	No. _____ to charge/credit DEPOSIT ACCOUNT No. _____ for following:	☐ All Fees ☐ 1.16 Fees (Filing) ☐ 1.17 Fees (Processing Ext. of time) ☐ 1.18 Fees (Issue) ☐ Other _____ ☐ Credit

PATENT APPLICATION SERIAL NO. _____

U.S. DEPARTMENT OF COMMERCE
PATENT AND TRADEMARK OFFICE
FEE RECORD SHEET

05/24/2001 MBELETE1 00000007 09861983

01 FC:101 710.00 OP
02 FC:103 72.00 OP

PTO-1556
(5/87)

*U.S. GPO: 2000-468-987/39595

05-17-01

A
MA
#9

"Express Mail" mailing label number EL5009800US.
Date of Deposit May 16, 2001

Case No. 10541/388-1

PATENT APPLICATION TRANSMITTAL LETTER

To the Commissioner for Patents:

Transmitted herewith for filing is the patent application of: Ian Halleron and Jon Dixon for : PURGE FUEL CANISTER MEASUREMENT METHOD AND SYSTEM. Enclosed are:

- ☒ 2 sheet(s) of drawings, 19 pages of application (including title page), and the following Appendices : _____.
- ☒ Declaration.
- ☒ Power of Attorney.
- ☐ Verified statement to establish small entity status under 37 CFR §§ 1.9 and 1.27.
- ☒ Assignment transmittal letter and Assignment of the invention to : Visteon Global Technologies, Inc..
- ☒ $782 check for application filing fee; $40 check for Recordal of Assignment fee; Information Disclosure Statement, Form PTO-1449, and five cited references; and return postcard.

Claims as Filed For	Col. 1 No. Filed	Col. 2 No. Extra	Small Entity Rate	Small Entity Fee		Other Than Small Entity Rate	Other Than Small Entity Fee
Basic Fee				$ 355	or		$ 710
Total Claims	24-20	4	x$9=	$	or	4x$18=	$72
Indep. Claims	3-3	0	x$40=	$	or	x$80=	$
Multiple Dependent Claims Present			+$135=	$	or	+$270=	$
*If the difference in col. 1 is less than zero, enter "0" in col. 2.			Total	$	or	Total	$782

- ☐ Please charge my Deposit Account No. 23-1925 in the amount of $: _____. A duplicate copy of this sheet is enclosed.
- ☒ A check in the amount of $: 782 to cover the filing fee is enclosed.
- ☒ The Commissioner is hereby authorized to charge payment of the following fees associated with this communication or credit any overpayment to Deposit Account No. 23-1925. A duplicate copy of this sheet is enclosed.
  - ☒ Any additional filing fees required under 37 CFR § 1.16.
  - ☒ Any patent application processing fees under 37 CFR §1.17.
- ☐ The Commissioner is hereby authorized to charge payment of the following fees during the pendency of this application or credit any overpayment to Deposit Account No. 23-1925. A duplicate copy of this sheet is enclosed.
  - ☐ Any filing fees under 37 CFR § 1.16 for presentation of extra claims.
  - ☐ Any patent application processing fees under 37 CFR § 1.17.
  - ☐ The issue fee set in 37 CFR § 1.18 at or before mailing of the Notice of Allowance, pursuant to 37 CFR § 1.311(b).

May 16, 2001
Date

Matthew J. Kelly
BRINKS HOFER GILSON & LIONE
Registration No. 42,716

Rev. Nov-98
F:\COMMON\MJK\10541 Visteon Tech\10541-388-1 Measurement of Canister Purge\10541-388-1 Transmittal 5-16-01.doc

123/579

PRINT OF DRAWINGS AS ORIGINALLY F

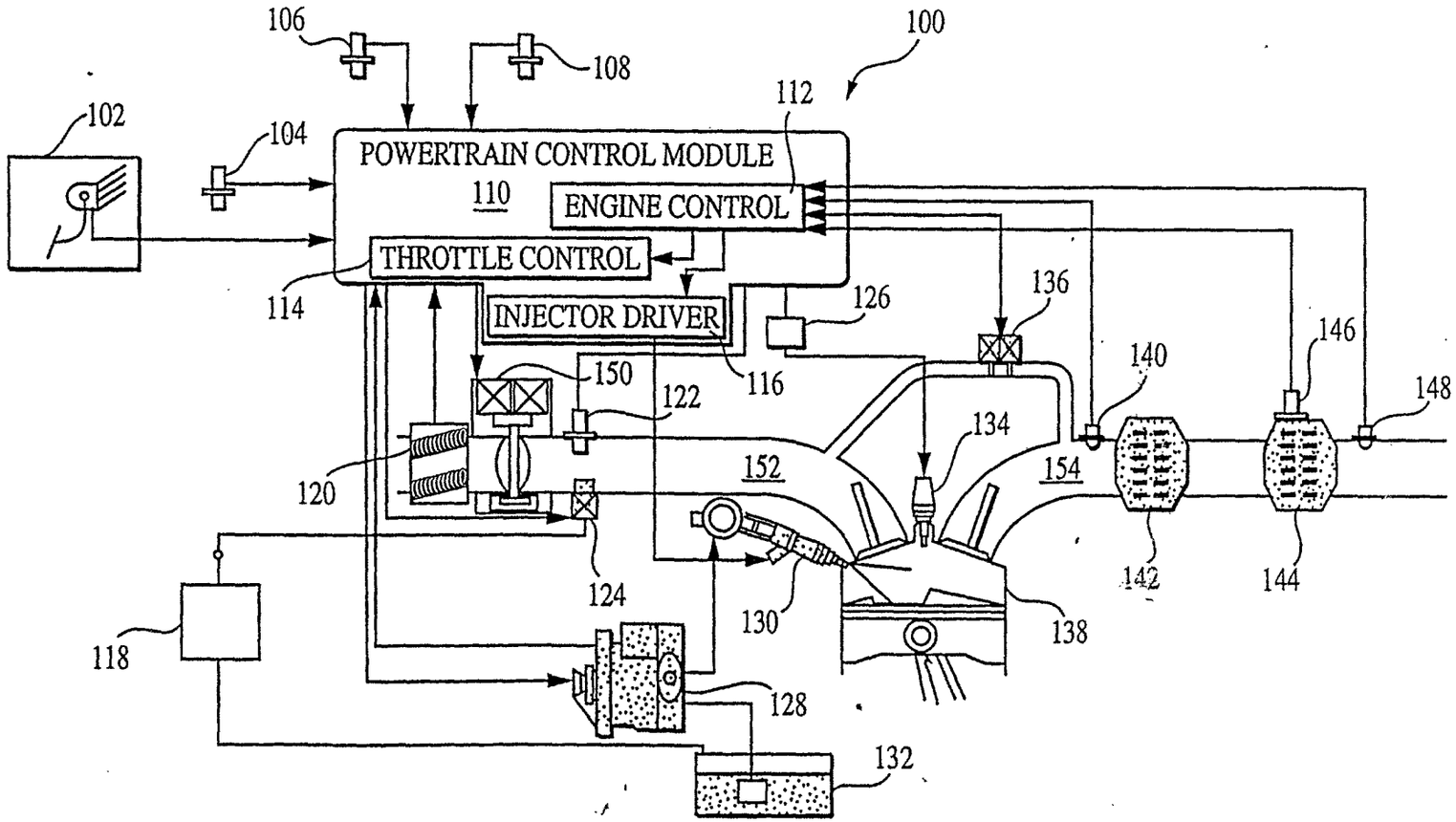

Figure 1

PETITIONER'S EXHIBIT 1002
US PATENT NO. 6,561,166

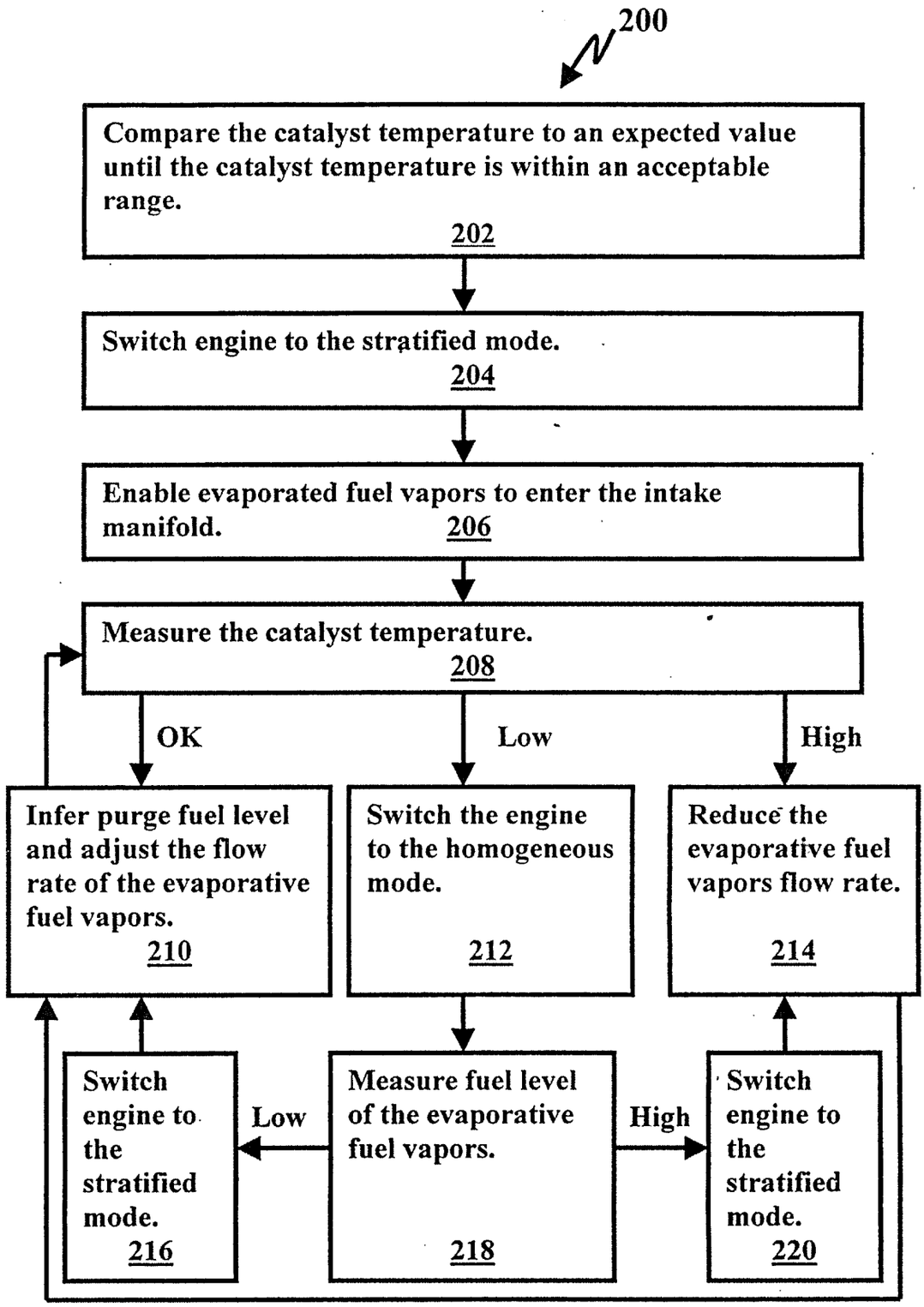
200
Compare the catalyst temperature to an expected value until the catalyst temperature is within an acceptable range.
202
Switch engine to the stratified mode.
204
Enable evaporated fuel vapors to enter the intake manifold.
206
Measure the catalyst temperature.
208
OK
Low
High
Infer purge fuel level and adjust the flow rate of the evaporative fuel vapors.
210
Switch the engine to the homogeneous mode.
212
Reduce the evaporative fuel vapors flow rate.
214
Switch engine to the stratified mode.
216
Low
Measure fuel level of the evaporative fuel vapors.
218
High
Switch engine to the stratified mode.
220

Figure 2

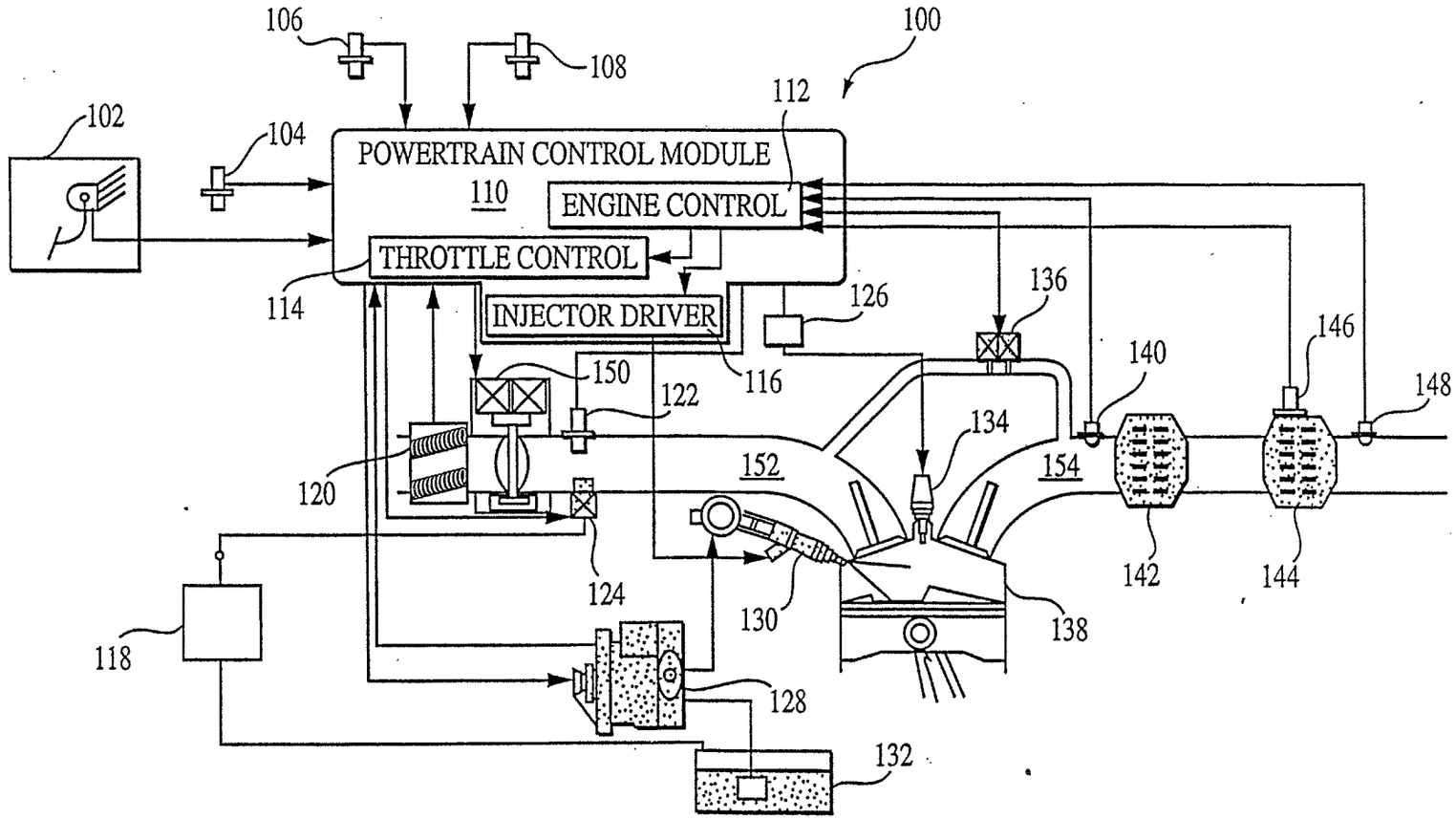

Figure 1

6561166

PETITIONER'S EXHIBIT 1002
US PATENT NO. 6,561,166

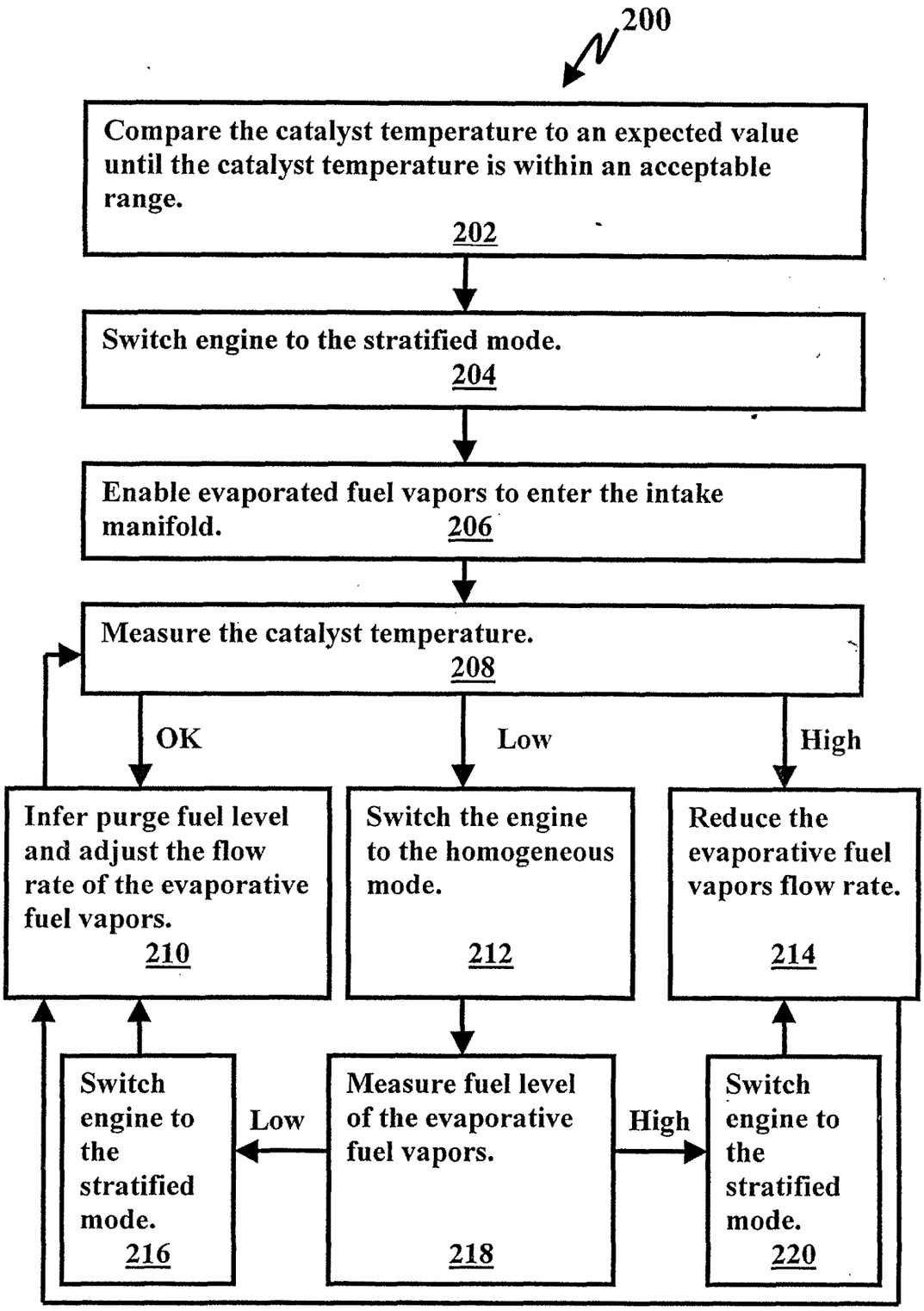

Figure 2

PETITIONER'S EXHIBIT 1002
US PATENT NO. 6,561,166

"Express Mail" mailing label number EL500980054US

Date of Deposit: May 16, 2001

Our Case No.10541/388-1

IN THE UNITED STATES PATENT AND TRADEMARK OFFICE
APPLICATION FOR UNITED STATES LETTERS PATENT

INVENTOR: Ian Halleron
Jon Dixon

TITLE: PURGE FUEL CANISTER MEASUREMENT METHOD AND SYSTEM

ATTORNEY: Matthew J. Kelly, Reg. No. 42,716
BRINKS HOFER GILSON & LIONE
P.O. BOX 10395
CHICAGO, ILLINOIS 60610
(312) 321-4200

PURGE FUEL CANISTER MEASUREMENT METHOD AND SYSTEM

REFERENCE TO RELATED APPLICATION

[0001] This application claims the benefit of U.S. Provisional Application No. 60/211,085, filed June 13, 2000, titled "Measurement of Canister Purge Fuel Content in a Stratified Direct Injection Gasoline Engine."

BACKGROUND

[0002] This invention relates generally to the field of gasoline-based internal combustion engines and more specifically to direct injection engines.

[0003] Direct injection engines, also called "in-cylinder injection engines," inject fuel directly into the cylinders. Diesel engines commonly use direct injection. Gasoline engines, also called spark ignition engines, normally are port fuel injection engines that inject fuel via a carburetor or a fuel injector into the intake manifold or over the intake values into the cylinders. Recently, direct injection spark ignited ("DISI") engines have been proposed. A DISI engine requires the fuel to be injected at relatively high pressure. Such a DISI engine also requires that the air-fuel ratio be leaner than convention gasoline engines and the air-fuel ratio must remain within tighter margins.

[0004] DISI engines operate in a stratified mode or a homogenous mode. When a DISI engine is in the stratified mode, the combustion chambers contain stratified layers with different air/fuel mixtures. The strata closest to the spark plug contains a stoichiometric mixture, that is a slightly richer mixture, and subsequent strata contain progressively leaner mixtures. When the engine is in the homogeneous mode, a homogeneous mixture of air and fuel is injected into the combustion chamber.

PETITIONER'S EXHIBIT 1002
US PATENT NO. 6,561,166

Homogeneous operation may be either lean of stoichiometry; at stoichiometry, or rich of stoichiometry.

[0005] When a DISI engine operates in the stratified mode, the fuel is injected late in the compression cycle, usually during a compression stroke. Because of the late injection, a very short time is available for mixing of the air and fuel in the cylinder. Stable combustion is obtained because the rich zone air/fuel mixture near the spark plug is within the combustion limits while the overall air/fuel mixture in the cylinder is leaner than the air/fuel mixture normally used when the engine is in the homogeneous mode. When the engine is in the homogeneous mode, fuel is injected during an intake stroke of the engine. More mixing time is available in the homogenous mode. The stratified mode is more fuel efficient than the homogenous mode.

[0006] Direct injection engines are commonly coupled to three-way catalytic converters to reduce CO, HC, and NOx emissions. When operating at air/fuel mixtures lean of stoichiometry, an NOx trap or an NOx catalyst is typically coupled downstream of the three-way catalytic converter to further reduce NOx emissions. The stratified mode may be used for light to medium loads and the homogeneous mode may be used for medium to heavy loads.

[0007] Gasoline engines typically collect evaporated fuel vapors from the gasoline tank in a carbon canister, also called a charcoal canister or an evaporative canister. The evaporated fuel vapors are purged from the carbon canister into the intake manifold and burned in the combustion chambers, that is in the cylinders, along with the fuel that is injected via the fuel injectors. Since the air-fuel ratio of the evaporated fuel vapors is not known, the net air-fuel ratio in the cylinder or in a strata

PETITIONER'S EXHIBIT 1002
US PATENT NO. 6,561,166

in the cylinder is not known. Thus, it is desirable to measure the air-fuel ratio of the evaporated fuel vapors and control the air-fuel ratio injected into the combustion chambers accordingly. Traditionally, the fuel level of the evaporated fuel vapors is measured with an exhaust gas oxygen sensor, such as a switching HEGO sensor or a linear UEGO sensor. When the engine is running lean, the exhaust gas oxygen sensor may not be able to accurately detect the fuel level of the evaporated fuel vapors.

[0008] As gasoline engines become more efficient, that is they are run leaner, the exhaust gas sensors become less accurate or stop working. For example, a DISI engine operating in the stratified mode uses a much leaner mixture than when it is operating in the homogenous mode. The evaporated fuel vapors, which need to be burned, contain a homogenous mixture of air and fuel. However, the fuel level in the evaporated fuel vapors varies over time. Thus, traditional engines often shut off the flow of evaporated fuel vapors when the engine is running lean, for example in the stratified mode. Shut off of the flow of the evaporated fuel vapors limits the efficiency of the engine by limiting the time the traditional engine can be operated in the stratified mode.

[0009] Further, when a traditional DISI engine running in the stratified mode purges evaporated fuel vapors into the combustion chamber, the strata outside the rich stratified zone may be too lean to support combustion. This may result in large quantities of unburned fuel in the exhaust gas, which may result in an undesirable large exothermic reaction in the catalyst as the catalyst oxidizes the unburned fuel. If the evaporated fuel vapors contain too much fuel, making the mixture too rich, the torque produced by the engine undesirably increases.

PETITIONER'S EXHIBIT 1002
US PATENT NO. 6,561,166

SUMMARY

[00010] An engine controller for a direct injection spark ignited internal combustion engine can operate in a stratified mode where fuel is injected during a compression stroke of the engine and a homogeneous mode where fuels is injected during an intake stroke of the engine. The engine controller adjusts the flow rate of evaporated fuel vapors as a function of the catalyst temperature and the fuel level in the evaporated fuel vapors. The engine controller determines the fuel level in the evaporated fuel vapors as a function of the exhaust gas oxygen senor output.

[00011] The improved system and method of controlling a direct injection spark ignition engine is described. The improved system and method may use sensors that are found on existing DISI engines to indirectly measure the fuel level in the evaporated fuel vapors. The improved system and method allows the evaporated fuel vapors to be purged into the intake manifold when the engine is run lean. Thus, the engine operates longer in the more efficient stratified mode resulting in a lower fuel consumption.

[00012] The foregoing discussion has been provided only by way of introduction. Nothing in this section should be taken as a limitation on the following claims, which define the scope of the invention.

BRIEF DESCRIPTION OF THE DRAWINGS

[00013] The components in the figures are not necessarily to scale, emphasis instead being placed upon illustrating the principles of the invention. Moreover, in the figures, like reference numerals designate corresponding parts throughout the different views.

PETITIONER'S EXHIBIT 1002
US PATENT NO. 6,561,166

[00014] FIGURE 1 illustrates a direct injection engine with an improved evaporated fuel vapors control system; and

[00015] FIGURE 2 illustrates a flow diagram of a method of controlling the direct injection engine of Figure 1.

DETAILED DESCRIPTION

A. DEFINITIONS

[00016] AFR - Air to Fuel Ratio. The air to fuel ratio may be the mass of Air divided by the mass of fuel.

[00017] CFD - Computational Fluid Dynamics

[00018] CTS - Catalyst Temperature Sensor

[00019] DI - Direct Injection

[00020] DISI - Direct Injection Spark Ignition

[00021] EFC - Electronic Flow Control

[00022] EG - Exhaust Gas

[00023] EGR - Exhaust Gas Re-circulation

[00024] EGO - Exhaust Gas Oxygen

[00025] EMVA - Electro-Mechanical Valve Actuation

[00026] ETC - Electronic Temperature Control

[00027] HEGO - Heated Exhaust Gas Oxygen

[00028] MAP - Manifold Absolute Pressure

[00029] OHC - Overhead Cam

[00030] PCV - Positive Crankcase Ventilation

[00031] PFI - Port Fuel Injection

[00032] SI - Spark Ignited

PETITIONER'S EXHIBIT 1002
US PATENT NO. 6,561,166

[00033] SIDI - Spark Ignition Direct-Injection

[00034] SOHC - Single Overhead Cam

[00035] Stoichiometric combustion - An ideal combustion in which the fuel is completely burned. In a stoichiometric combustion, all the Carbon is converted to CO2, all hydrogen is converted to H20, and all the sulfur is converted to SO2.

[00036] TWC - Three-Way Catalyst or Three-Way Catalytic converter

[00037] UEGO - Universal Exhaust Gas Oxygen

B. INTRODUCTION

[00038] The improved system and method of controlling a direct injection spark ignition engine is described. The improved system and method may use sensors that are found on existing DISI engines to indirectly measure the fuel level in the evaporated fuel vapors. The improved system and method allows the evaporated fuel vapors to be purged into the intake manifold when the engine is run lean. Thus, the engine operates longer in the more efficient stratified mode resulting in a lower fuel consumption.

[00039] The following description of the preferred embodiments of the invention is not intended to limit the scope of the invention to these preferred embodiments, but rather to enable any person skilled in the art to make and use the invention.

C. DIRECT INJECTION SYSTEM

[00040] Figure 1 illustrates an embodiment of a direct injection spark ignition ("DISI") engine 100. The DISI engine 100 may include such components as an accelerator pedal and sensor assembly 102, a crank angle sensor 104, a CAM position sensor 106, an engine coolant sensor 108 or cylinder head temperature

PETITIONER'S EXHIBIT 1002
US PATENT NO. 6,561,166

sensor 108, a powertrain control module 110, an engine control module 112, a throttle control module 114, an injector driver module 116, a carbon canister 118, a temperature/mass air flow meter 120, a MAP sensor 122, a vapor management valve 124, an ignition control 126, a fuel pump 128, a fuel injector 130, a fuel tank 132, a spark plug 134, an exhaust gas re-circulation ("EGR") valve 136, a high compression engine 138, a universal exhaust gas oxygen ("UEGO") sensor 140, a three-way catalytic converter ("TWC") 142, a NOx trap/catalyst 144, a catalyst temperature sensor ("CTS") 146, a heated exhaust gas oxygen ("HEGO") sensor 148, a throttle 150, an intake manifold 152, and an exhaust manifold 154.

[00041] The evaporative fuel vapor system captures evaporative fuel vapors from the gasoline tank 132, stores the evaporative fuel vapor in the canister 118, and releases the vapors into the intake manifold 152 via the vapor management valve 124. The vapor management valve 124 may be controlled by the engine controller 112. The evaporative fuel vapors tend to be a homogeneous mixture of fuel vapors and air. The fuel level in the evaporative fuel vapors varies over time. The vapor management valve 124 may release the evaporative fuel vapors into the intake manifold 152. Then the evaporative fuel vapors enter the combustion chamber via an intake valve. The fuel injector 130 injects fuel directly into the combustion chamber. The injected fuel and the evaporative fuel vapors mix before combustion. The exhaust gases resulting from the combustion are exhausted via an exhaust valve into the exhaust manifold 154. The CTS 146 is located near the lean NOx trap/catalyst 144 and measures the temperature of the lean NOx trap/catalyst 144 during the cleansing of the wash coat of SOx to control poisoning.

PETITIONER'S EXHIBIT 1002
US PATENT NO. 6,561,166

[00042] The engine 100 is controlled by various engine controllers including the power train control module 110. The power train control module 110 may in include such controllers as an engine control 112, a throttle control 114, and an injector driver 116. For example, the power train control module 110 may include a canister purge valve controller for a direct injection spark ignited internal combustion engine that includes a temperature sensor interface that receives a temperature of a catalyst in the engine's exhaust system, an engine mode controller that switches the engine between a stratified mode and a homogeneous mode, and a canister purge valve interface that controls a flow rate of evaporated fuel vapors into the engine's intake manifold via a canister purge valve. The canister purge valve controller may control the flow rate of evaporated fuel vapors as a function of the temperature received by the temperature sensor interface and the engine's mode.

[00043] The components of the DISI engine 100 may include various variations of the devices described above. The fuel pump 128 may include a high pressure fuel pump, an electronically controlled pressure regulator, and a pressure sensor assembly. The fuel injector 130 may include a high pressure fuel rail assembly. The fuel tank 132 may include a feed pump. The EGR valve 136 may include an electric EGR valve. The engine 138 may include multiple cylinders, each with a direct injection fuel injector. The TWC 142 may include a quick light-off TWC. The NOx trap/catalyst 144 may include a lean NOx trap, a lean NOx catalyst, or other device to reduce NOx in the exhaust gas. The throttle 150 may include an electronic controlled throttle. Other variations in the components of the DISI engine 100 will also be apparent and within the scope of the invention.

PETITIONER'S EXHIBIT 1002
US PATENT NO. 6,561,166

[00044] Figure 2 illustrates a flow diagram of a method of controlling the DISI engine 100 of Figure 1.

[00045] In block 202, the CTS 146 (Figure 1) is tested to determine if it is operating within calibration limits without evaporated fuel vapors being introduced into the combustion chamber. The engine 100 (Figure 1) may be in the homogeneous mode or the stratified mode during the calibration. The calibration includes comparing the catalyst temperature as measured by the CTS to an expected range. If the engine 100 is outside the calibration range, the engine 100 may be operated in the stratified mode with the evaporative fuel vapors turned off and in the homogeneous mode with the evaporative fuel vapors on or off. The activities in block 204 to 220 are not executed when the engine 100 is operating outside the calibration range.

[00046] In block 204, if the engine 100 is in the homogeneous mode, the engine 100 is switched to the stratified mode. The engine control 112 (Figure 1) may control the mode of operation of the engine 100.

[00047] In block 206, the evaporated fuel vapors from the carbon canister 118 (Figure 1) are allowed to enter the intake manifold 152 (Figure 1). The flow rate of the evaporated fuel vapors may be controlled by the vapor management valve 124 (Figure 1) and the engine control 112.

[00048] In block 208, the temperature of the catalyst is measured when the evaporated fuel vapors are being introduced into the combustion chamber. The temperature of the catalyst may be measured by the CTS 146. The catalyst temperature should rise after the evaporated fuel vapors are introduced due to the oxidation of the unburned fuel in the exhaust gas. The catalyst temperature change

PETITIONER'S EXHIBIT 1002
US PATENT NO. 6,561,166

can be determined as the temperature difference between the temperature measured in block 208 and the temperature measured in block 202 or as the temperature difference between the temperature measured in block 208 and an expected temperature based on a temperature model.

[00049] In block 210, if the catalyst temperature change from block 208 is within an acceptable range, the engine can remain in the stratified mode with the evaporated fuel vapors being introduced, and the fuel level of the evaporated fuel vapors can be determined as a function of the temperature change measured in block 208. The acceptable range may have different upper and lower thresholds depending on various factors.

[00050] In block 214, if the catalyst temperature change from block 208 is above the acceptable range, the evaporated fuel vapors contain too much fuel. The flow rate of the evaporated fuel vapors may be adjusted, normally reduced, to allow some of the evaporated fuel vapors to be purged while maintaining the engine 100 in the stratified mode. The flow rate can be repeatedly reduced in block 214 until the catalyst temperature is within an acceptable range. Alternatively, the engine 100 could be switched to the homogeneous mode with the evaporated fuel vapors being purged at the same rate until the fuel level in the evaporated fuel vapors is reduced to an acceptable level for operation in the stratified mode.

[00051] In block 212, if the catalyst temperature change from block 208 is below the acceptable range, the fuel level in the evaporated fuel vapors is either low or very high. If the fuel level in the evaporated fuel vapors is very high, the entire stratified charge becomes combustible. To determine whether the fuel level in the

PETITIONER'S EXHIBIT 1002
US PATENT NO. 6,561,166

evaporated fuel vapors is low or very high, the engine 100 is switched to the homogeneous mode, then block 218 is executed.

[00052] In block 218, after the engine 100 is switched to the homogeneous mode in block 212, the fuel level of the evaporated fuel vapors can be accurately measured via an EGO sensor, for example an UEGO. Then either block 216 or 218 is executed based on whether the EGO sensor indicates a high or low level of fuel in the evaporative fuel vapors.

[00053] In block 216, if the fuel level of the evaporated fuel vapors measured in block 218 is below a fuel level threshold, the engine is switched back to the stratified mode. Then, the purge fuel level is determined as a function of the catalyst temperature in block 210.

[00054] In block 220, if the fuel level of the evaporated fuel vapors measured in block 218 is above the fuel level threshold, the engine is switched back to the stratified mode. Then, the flow rate of the evaporated fuel vapors is reduced in block 214. Alternatively, the engine 100 could be operated in the homogeneous mode with the evaporated fuel vapors being purged at the same rate until the fuel level in the evaporated fuel vapors is reduced to an acceptable level for operation in the stratified mode.

[00055] The process or portions of the process described in blocks 202 to 220 may be repeated a number of times. Further, the process described in blocks 202 to 220 may be a component of a larger process that cycles the engine between the stratified mode and the homogeneous mode based on other factors, such as engine load, acceleration, and other factors.

PETITIONER'S EXHIBIT 1002
US PATENT NO. 6,561,166

[00056] As a person skilled in the art will recognize from the previous description and from the figures and claims, modifications and changes can be made to the preferred embodiments of the invention without departing from the scope of the invention defined in the following claims.

PETITIONER'S EXHIBIT 1002
US PATENT NO. 6,561,166

CLAIMS

What is claimed is:

1. A method of controlling a direct injection spark ignited internal combustion engine that is capable of operating in a stratified mode where fuel is injected during a compression stroke of the engine and a homogeneous mode where fuels is injected during an intake stroke of the engine, comprising:

measuring a first temperature of a catalyst that is in contact with an exhaust gas exhausted from a combustion chamber while the engine is operating in the stratified mode;

enabling evaporated fuel vapors to enter the combustion chamber at a flow rate while the engine is operating in the stratified mode;

measuring a second temperature of the catalyst while the engine is operating in the stratified mode; and

adjusting the flow rate of the evaporated fuel vapors as a function of the second temperature when the second temperature is within a lower temperature threshold and an upper temperature threshold.

2. The method of claim 1, further comprising:

switching the engine to the homogeneous mode when the second temperature is below the lower temperature threshold.

3. The method of claim 2, further comprising:

measuring a fuel level of the evaporated fuel vapors after the switching the engine to the homogeneous mode.

PETITIONER'S EXHIBIT 1002
US PATENT NO. 6,561,166

4. The method of claim 3, wherein the measuring the fuel level comprises measuring the fuel level via an exhaust gas oxygen sensor.

5. The method of claim 4, wherein the measuring the fuel level comprises measuring the fuel level with an universal exhaust gas oxygen sensor.

6. The method of claim 5, further comprising:

switching the engine to the stratified mode when the measured fuel level in the evaporated fuel vapors is above a fuel level threshold.

7. The method of claim 6, further comprising lowering the flow rate after switching the engine to the stratified mode.

8. The method of claim 5, further comprising:

switching the engine to the stratified mode when the measured fuel level in the evaporated fuel vapors is below the fuel level threshold; and

adjusting the flow rate as a function of the second temperature.

9. The method of claim 8, further comprising:

lowering the lower temperature threshold after switching to the stratified mode.

PETITIONER'S EXHIBIT 1002
US PATENT NO. 6,561,166

10. The method of claim 9, repeating the method of controlling a direct injection spark ignited internal combustion engine with the lowered lower temperature threshold.

11. The method of claim 1, further comprising:

reducing the flow rate of the evaporated fuel vapors into the combustion chamber as a function of the difference between the first and second temperatures when the catalyst temperature exceeds the upper temperature threshold.

12. An engine controller for a direct injection spark ignited engine that is capable of operating a stratified mode and a homogeneous mode, comprising:

an engine control module that is capable of switching the engine between the stratified and homogeneous modes and adjusting a flow rate of evaporated fuel vapors as a function of a temperature of a catalyst.

13. The engine controller of claim 12, further comprising:

a temperature sensor that is capable of measuring the temperature of the catalyst in an exhaust system of the engine

wherein a carbon-based canister receives fuel vapors from a gasoline tank and provides evaporated fuel vapors to an intake manifold of the engine.

14. The engine controller of claim 13, wherein the temperature sensor measures a temperature in an NOx trap.

PETITIONER'S EXHIBIT 1002
US PATENT NO. 6,561,166

15. The engine controller of claim 13, wherein the temperature sensor measures a temperature in a NOx catalytic converter.

16. The engine controller of claim 13, wherein the engine control module switches the engine from the stratified mode to the homogeneous mode when the catalyst temperature is below a lower temperature threshold.

17. The engine controller of claim 16, further comprising:

an exhaust gas oxygen sensor that measures a fuel level of the evaporated fuel vapors after the engine is switched to the homogeneous mode.

18. The engine controller of claim 17, wherein the exhaust gas oxygen sensor comprises a universal exhaust gas oxygen sensor.

19. The engine controller of claim 18, wherein the exhaust gas oxygen sensor is upstream of a three-way catalytic converter.

20. The engine controller of claim 19, wherein the engine control module switches the engine back to the stratified mode and lowers the flow rate of the evaporated fuel vapors when the fuel level of the evaporated fuel vapors exceeds a fuel level threshold.

PETITIONER'S EXHIBIT 1002
US PATENT NO. 6,561,166

21. The engine controller of claim 20, wherein the engine control module switches the engine back to the stratified mode and lowers the lower temperature threshold when the fuel level is below the fuel level threshold.

22. The engine controller of claim 21, wherein the engine control module adjusts the flow rate of the evaporated fuel vapors as a function of the catalyst temperature.

23. The engine controller of claim 20, wherein the engine control module switches the engine from the homogeneous mode only when the catalyst temperature is within a temperature range.

24. A canister purge valve controller for a direct injection spark ignited internal combustion engine, comprising:

a temperature sensor interface that receives a temperature of a catalyst in the engine's exhaust system;

an engine mode controller that switches the engine between a stratified mode and a homogeneous mode; and

a canister purge valve interface that controls a flow rate of evaporated fuel vapors into the engine's intake manifold via a canister purge valve;

wherein the flow rate of evaporated fuel vapors is a function of the temperature received by the temperature sensor interface and the engine's mode.

PETITIONER'S EXHIBIT 1002
US PATENT NO. 6,561,166

ABSTRACT

[00057] An engine controller system for a direct injection spark ignited internal combustion engine that is capable of operating a stratified mode where fuel is injected during a compression stroke of the engine and a homogeneous mode where fuels is injected during an intake stroke of the engine. The engine controller monitors adjusts the flow rate of the evaporated fuel vapors as a function of the catalyst temperature and the fuel level in the evaporated fuel vapors. The engine controller determines the fuel level in the evaporated fuel vapors as a function of the exhaust gas oxygen senor output.

PETITIONER'S EXHIBIT 1002
US PATENT NO. 6,561,166

Attorney Docket No.: 10541-388-1
Visteon Case No.: 199-1758

DECLARATION AND POWER OF ATTORNEY ORIGINAL APPLICATION

As a below named inventor, I hereby declare:

My residence, post office address and citizenship are as stated below next to my name;

I believe I am the original, first and sole inventor or an original, first and joint inventor of the subject matter that is claimed and for which a patent is sought on the invention entitled:

PURGE FUEL CANISTER MEASUREMENT METHOD AND SYSTEM

the specification of which is attached hereto.

I hereby state that I have reviewed and understand the contents of the above identified specification, including the claims, as amended by any amendment referred to above.

I acknowledge my duty to disclose to the United States Patent and Trademark Office all information that I know to be material to the patentability of this application as defined in Title 37 C.F.R. § 1.56.

I hereby claim foreign priority benefits under Title 35, United States Code, Section 119(a)-(d) or Section 365(b) of any foreign application(s) for patent or inventor's certificate, or Section 365(a) of any PCT International application which designated at least one country other than the United States, listed below and have also identified below, by checking the box, any foreign application for patent or inventor's certificate or PCT International application having a filing date before that of the application on which priority is claimed.

Prior Foreign Application(s):			Priority Not Claimed
_____ (Number)	_____ (Country)	_____ (Filing Date)	☐
_____ (Number)	_____ (Country)	_____ (Filing Date)	☐
_____ (Number)	_____ (Country)	_____ (Filing Date)	☐

I hereby claim the benefit under 35 U.S. C. Section 119(e) of any United States provisional application(s) listed below:

_____ (Application Serial No.)	_____ (Filing Date)
_____ (Application Serial No.)	_____ (Filing Date)
_____ (Application Serial No.)	_____ (Filing Date)

PETITIONER'S EXHIBIT 1002
US PATENT NO. 6,561,166

I hereby claim the benefit u[illegible] 35 U.S.C. Section 120 of any Unite[illegible]tates applications(s), or Section 365(c) of any PCT International Application designating the United States, listed below and, insofar as the subject matter of each of the claims of this application is not disclosed in the prior United States or PCT International application in the manner provided by the first paragraph of 35 U.S.C. Section 112, I acknowledge the duty to disclose to the United States Patent and Trademark Office all information known to me to be material to patentability as defined in Title 37, C.F.R., Section 1.56 which became available between the filing date of the prior application and the national or PCT International filing date of this application.

(Application Serial No.)	(Filing Date)	(Status: patented, pending, abandoned)
(Application Serial No.)	(Filing Date)	(Status: patented, pending, abandoned)
(Application Serial No.)	(Filing Date)	(Status: patented, pending, abandoned)

I hereby declare that all statements made herein of my own knowledge are true and that all statements made on information and belief are believed to be true; and further that these statements were made with the knowledge that willful false statements and the like so made are punishable by fine or imprisonment, or both, under Section 1001 of Title 18 of the United States Code and that such willful false statements may jeopardize the validity of the application or any patent issued thereon.

POWER OF ATTORNEY: As a named inventor, I hereby appoint the following attorneys, agents, and each shareholder, attorney of counsel, associate, and employee of Brinks Hofer Gilson & Lione, who is a registered Patent Attorney or registered Patent Agent, my attorney with full power of substitution and revocation to prosecute this application and transact all business in the United States Patent and Trademark Office connected therewith and to act on my behalf before the competent International Authorities in connection with any and all international applications filed by me.

Steven L. Oberholtzer, Reg. No. 30,670
David D. Murray, Reg. No. 28,647
Eric J. Sosenko, Reg. No. 34,440
Jeffrey M. Cox, Reg. No. 42,445
Raymond J. Vivacqua, Reg. No. 45,369
J. Matthew Buchanan, Reg. No. 47,459
Michael P. Chu, Reg. No. 37,112
John C. Freeman, Reg. No. 34,483
G. Peter Nichols, Reg. No. 34,401
Craig A. Summerfield 37,947
Mark Mollon, Reg. No. 31,123
Larry I. Shelton, Reg. No. 45,100
John Kajander, Reg. No. 47,693

Address all correspondence and telephone calls to:

Steven L. Oberholtzer
BRINKS HOFER GILSON & LIONE
P.O. Box 10395
Chicago, IL 60610
(734) 994-6285

Full name of sole or first inventor	Ian Halleron
Sole or first inventor's signature	Date 11 MAY 2001
Residence	127 Moulsham Drive, Chelmsford, Essex, CM2 9PY, Great Britain
Citizenship	British
Post Office Address	127 Moulsham Drive, Chelmsford, Essex, CM2 9PY, Great Britain

PETITIONER'S EXHIBIT 1002
US PATENT NO. 6,561,166

Full name of second inventor, if any	Jon Dixon	
Second inventor's signature		Date 11 MAY 2001
Residence	9 Mount Lodge Chase, Great Totham, Maldon, Essex CM9 8DU, Great Britain	
Citizenship	British	
Post Office Address	9 Mount Lodge Chase, Great Totham, Maldon, Essex CM9 8DU, Great Britain	

Application Assignment Record

According to the application transmittal letter, an assignment recording ownership was filed with this application; however, a copy of this record was not located in the original file history record obtained from the United States Patent and Trademark Office. Upon your request, we will attempt to obtain the assignment documents from the Assignment Recordation Branch of of the United States Patent and Trademark Office or from a related application case (if applicable). Please note that additional charges will apply for this service.

This page is not part of the official USPTO record. It has been determined that content identified on this document is missing from the original file history record.

PETITIONER'S EXHIBIT 1002
US PATENT NO. 6,561,166

"Express Mail" mailing label number EL 500980054US

Date of Deposit: May 16, 2001

JC978 U.S. PTO
09/861983
05/16/01

Our Case No.: 10541/388-1

IN THE UNITED STATES PATENT AND TRADEMARK OFFICE

In re Application of:	
Halleron et al.	Examiner: To Be Assigned
Serial No.: To Be Assigned	Group Art Unit No.: To Be Assigned
Filing Date: Herewith	
For: PURGE FUEL CANISTER MEASUREMENT METHOD AND SYSTEM	

INFORMATION DISCLOSURE STATEMENT

Commissioner for Patents
Washington, D.C. 20231

Dear Sir:

In compliance with the duty of disclosure under 37 C.F.R. § 1.56, it is respectfully requested that this Information Disclosure Statement be entered and the documents listed below and on the attached Form PTO-1449 be considered by the Examiner and made of record. Copies of the listed documents required by 37 C.F.R. § 1.98(a)(2) are enclosed for the convenience of the Examiner.

The references now cited are the following:

No.	Date	Name
5,426,938	June 27, 1995	Ogawa et al.
US 6,209,526 B1	April 3, 2001	Sun et al.
WO 94/20738	September 15, 1994	Ma
WO 99/32766	July 1, 1999	Baker et al.
WO 99/14482	March 25, 1999	Ma

In accordance with 37 C.F.R. § 1.97(g),(h), this Information Disclosure Statement is not to be construed as a representation that a search has been made and is not to be construed to be an admission that the information cited is, or is considered to be, material to patentability as defined in 37 C.F.R. § 1.56(b).

This Information Disclosure Statement is being filed prior to the receipt of the first Official Action reflecting an examination on the merits and hence is believed to be timely filed in accordance with 37 C.F.R. § 1.97(b). No fees are believed to be due in connection with filing of this Information Disclosure Statement, however, should any fees under 37 C.F.R. §§ 1.16 to 1.21 be deemed necessary for any reason relating to these material, the Commissioner is hereby authorized to deduct said fees from Brinks Hofer Gilson & Lione Deposit Account No. 23-1925. A duplicate copy of this document is enclosed.

Applicant(s) respectfully request that the listed documents be made of record in the present case.

Respectfully submitted,

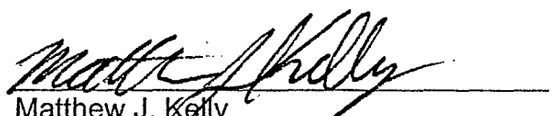

Matthew J. Kelly
Registration No. 42,716
Attorney for Applicant(s)

BRINKS HOFER GILSON & LIONE
P.O. Box 10395
Chicago, IL 60610
(312) 321-4200

#2

JC978 U.S. PTO
09/861983
05/16/01

"Express Mail" mailing label number EL 500980054US

Date of Deposit: May 16, 2001

Our Case No.: 10541/388-1

IN THE UNITED STATES PATENT AND TRADEMARK OFFICE

In re Application of:	
Halleron et al.	Examiner: To Be Assigned
Serial No.: To Be Assigned	Group Art Unit No.: To Be Assigned
Filing Date: Herewith	
For: PURGE FUEL CANISTER MEASUREMENT METHOD AND SYSTEM	

INFORMATION DISCLOSURE STATEMENT

Commissioner for Patents
Washington, D.C. 20231

Dear Sir:

In compliance with the duty of disclosure under 37 C.F.R. § 1.56, it is respectfully requested that this Information Disclosure Statement be entered and the documents listed below and on the attached Form PTO-1449 be considered by the Examiner and made of record. Copies of the listed documents required by 37 C.F.R. § 1.98(a)(2) are enclosed for the convenience of the Examiner.

The references now cited are the following:

No.	Date	Name
5,426,938	June 27, 1995	Ogawa et al.
US 6,209,526 B1	April 3, 2001	Sun et al.
WO 94/20738	September 15, 1994	Ma
WO 99/32766	July 1, 1999	Baker et al.
WO 99/14482	March 25, 1999	Ma

In accordance with 37 C.F.R. § 1.97(g),(h), this Information Disclosure Statement is not to be construed as a representation that a search has been made and is not to be construed to be an admission that the information cited is, or is considered to be, material to patentability as defined in 37 C.F.R. § 1.56(b).

This Information Disclosure Statement is being filed prior to the receipt of the first Official Action reflecting an examination on the merits and hence is believed to be timely filed in accordance with 37 C.F.R. § 1.97(b). No fees are believed to be due in connection with filing of this Information Disclosure Statement, however, should any fees under 37 C.F.R. §§ 1.16 to 1.21 be deemed necessary for any reason relating to these material, the Commissioner is hereby authorized to deduct said fees from Brinks Hofer Gilson & Lione Deposit Account No. 23-1925. A duplicate copy of this document is enclosed.

Applicant(s) respectfully request that the listed documents be made of record in the present case.

Respectfully submitted,

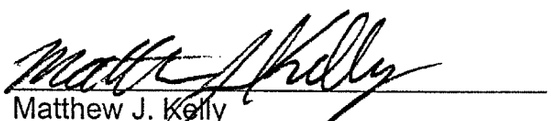

Matthew J. Kelly
Registration No. 42,716
Attorney for Applicant(s)

BRINKS HOFER GILSON & LIONE
P.O. Box 10395
Chicago, IL 60610
(312) 321-4200

FORM PTO-1449	SERIAL NO. To Be Assigned	CASE NO. 10541-388-1
LIST OF PATENTS AND PUBLICATIONS FOR APPLICANT'S INFORMATION DISCLOSURE STATEMENT	FILING DATE Herewith	GROUP ART UNIT To Be Assigned
(use several sheets if necessary)	APPLICANT(S): Halleron et al.	

JC978 U.S. PTO
09/861983
05/16/01

REFERENCE DESIGNATION **U.S. PATENT DOCUMENTS**

EXAMINER INITIAL		DOCUMENT NUMBER	DATE	NAME	CLASS/ SUBCLASS	FILING DATE
HHK	A1	5,426,938	06/27/1995	Ogawa et al.		
HHK	A2	US 6,209,526 B1	04/03/2001	Sun et al.		

FOREIGN PATENT DOCUMENTS

EXAMINER INITIAL		DOCUMENT NUMBER	DATE	COUNTRY	CLASS/ SUBCLASS	TRANSLATION YES	TRANSLATION NO
HHK	A3	WO 94/20738	09/15/1994	PCT			
HHK	A4	WO 99/32766	07/01/1999	PCT			
HHK	A5	WO 99/14482	03/25/1999	PCT			

EXAMINER INITIAL	OTHER ART (Including Author, Title, Date, Pertinent Pages, etc.)

EXAMINER HAI HUYNH	DATE CONSIDERED 7/1/02

EXAMINER: Initial if reference considered, whether or not citation is in conformance with MPEP 609; Draw line through citation if not in conformance and not considered. Include copy of this form with next communication to applicant.

Rev. Dec.-99
F:\COMMON\MJK\10541 Visteon Tech\10541-388-1 Measurement of Canister Purge\10541-388-1 Form PTO-1449.doc

File History Content Report

The following content is missing from the original file history record obtained from the United States Patent and Trademark Office. No additional information is available.

Document Date - 2001-07-19

Document Title - USPTO Communication Re: Change of Address

This page is not part of the official USPTO record. It has been determined that content identified on this document is missing from the original file history record.

UNITED STATES PATENT AND TRADEMARK OFFICE

UNITED STATES DEPARTMENT OF COMMERCE
United States Patent and Trademark Office
Address: COMMISSIONER OF PATENTS AND TRADEMARKS
Washington, D.C. 20231
www.uspto.gov

APPLICATION NO.	FILING DATE	FIRST NAMED INVENTOR	ATTORNEY DOCKET NO.	CONFIRMATION NO.
09/861,983	05/16/2001	Ian Halleron	10541/388-1	6796

7590 07/10/2002

Steven L. Oberholtzer
BRINKS HOFER GILSON & LIONE
P.O. Box 10395
Chicago, IL 60610

EXAMINER
HUYNH, HAI H

ART UNIT	PAPER NUMBER
3747	

DATE MAILED: 07/10/2002

Please find below and/or attached an Office communication concerning this application or proceeding.

PTO-90C (Rev. 07-01)

50

Office Action Summary	Application No.	Applicant(s)	
	09/861,983	HALLERON ET AL.	
	Examiner	Art Unit	
	Hai H. Huynh	3747	

-- The MAILING DATE of this communication appears on the cover sheet with the correspondence address --

Period for Reply

A SHORTENED STATUTORY PERIOD FOR REPLY IS SET TO EXPIRE 3 MONTH(S) FROM THE MAILING DATE OF THIS COMMUNICATION.

- Extensions of time may be available under the provisions of 37 CFR 1.136(a). In no event, however, may a reply be timely filed after SIX (6) MONTHS from the mailing date of this communication.
- If the period for reply specified above is less than thirty (30) days, a reply within the statutory minimum of thirty (30) days will be considered timely.
- If NO period for reply is specified above, the maximum statutory period will apply and will expire SIX (6) MONTHS from the mailing date of this communication.
- Failure to reply within the set or extended period for reply will, by statute, cause the application to become ABANDONED (35 U.S.C. § 133).
- Any reply received by the Office later than three months after the mailing date of this communication, even if timely filed, may reduce any earned patent term adjustment. See 37 CFR 1.704(b).

Status

1)☐ Responsive to communication(s) filed on _____ .

2a)☐ This action is **FINAL**. 2b)☒ This action is non-final.

3)☐ Since this application is in condition for allowance except for formal matters, prosecution as to the merits is closed in accordance with the practice under *Ex parte Quayle*, 1935 C.D. 11, 453 O.G. 213.

Disposition of Claims

4)☒ Claim(s) 1-24 is/are pending in the application.

4a) Of the above claim(s) _____ is/are withdrawn from consideration.

5)☐ Claim(s) _____ is/are allowed.

6)☒ Claim(s) 1-24 is/are rejected.

7)☐ Claim(s) _____ is/are objected to.

8)☐ Claim(s) _____ are subject to restriction and/or election requirement.

Application Papers

9)☐ The specification is objected to by the Examiner.

10)☐ The drawing(s) filed on _____ is/are: a)☐ accepted or b)☐ objected to by the Examiner.

Applicant may not request that any objection to the drawing(s) be held in abeyance. See 37 CFR 1.85(a).

11)☐ The proposed drawing correction filed on _____ is: a)☐ approved b)☐ disapproved by the Examiner.

If approved, corrected drawings are required in reply to this Office action.

12)☐ The oath or declaration is objected to by the Examiner.

Priority under 35 U.S.C. §§ 119 and 120

13)☐ Acknowledgment is made of a claim for foreign priority under 35 U.S.C. § 119(a)-(d) or (f).

a)☐ All b)☐ Some * c)☐ None of:

1.☐ Certified copies of the priority documents have been received.

2.☐ Certified copies of the priority documents have been received in Application No. _____ .

3.☐ Copies of the certified copies of the priority documents have been received in this National Stage application from the International Bureau (PCT Rule 17.2(a)).

* See the attached detailed Office action for a list of the certified copies not received.

14)☒ Acknowledgment is made of a claim for domestic priority under 35 U.S.C. § 119(e) (to a provisional application).

a) ☐ The translation of the foreign language provisional application has been received.

15)☐ Acknowledgment is made of a claim for domestic priority under 35 U.S.C. §§ 120 and/or 121.

Attachment(s)

1) ☒ Notice of References Cited (PTO-892)
2) ☐ Notice of Draftsperson's Patent Drawing Review (PTO-948)
3) ☒ Information Disclosure Statement(s) (PTO-1449) Paper No(s) 2,3 .
4) ☐ Interview Summary (PTO-413) Paper No(s). _____ .
5) ☐ Notice of Informal Patent Application (PTO-152)
6) ☐ Other:

PETITIONER'S EXHIBIT 1002
US PATENT NO. 6,561,166

DETAILED ACTION

Inventorship

1. This application currently names joint inventors. In considering patentability of the claims under 35 U.S.C. 103(a), the examiner presumes that the subject matter of the various claims was commonly owned at the time any inventions covered therein were made absent any evidence to the contrary. Applicant is advised of the obligation under 37 CFR 1.56 to point out the inventor and invention dates of each claim that was not commonly owned at the time a later invention was made in order for the examiner to consider the applicability of 35 U.S.C. 103(c) and potential 35 U.S.C. 102(e), (f) or (g) prior art under 35 U.S.C. 103(a).

Claim Rejections - 35 USC § 102

The following is a quotation of the appropriate paragraphs of 35 U.S.C. 102 that form the basis for the rejections under this section made in this Office action:

> A person shall be entitled to a patent unless –
>
> (e) the invention was described in-
> (1) an application for patent, published under section 122(b), by another filed in the United States before the invention by the applicant for patent, except that an international application filed under the treaty defined in section 351(a) shall have the effect under this subsection of a national application published under section 122(b) only if the international application designating the United States was published under Article 21(2)(a) of such treaty in the English language; or
> (2) a patent granted on an application for patent by another filed in the United States before the invention by the applicant for patent, except that a patent shall not be deemed filed in the United States for the purposes of this subsection based on the filing of an international application filed under the treaty defined in section 351(a).

2. Claims 1-24 are rejected under 35 U.S.C. 102(e) as being anticipated by Kerns (6,192,672).

Kerns teaches a method of controlling a direct injection spark ignited internal combustion engine comprising a step of adjusting a flow rate of evaporated fuel vapors as a function of a temperature of a catalyst (see figures 8-10, also col. 11 line 42 through col. 13 line 10).

Conclusion

3. The prior art made of record and not relied upon is considered pertinent to applicant's disclosure. Abe (4,986,070), Ito (5,245,975) teach a control means for controlling the evaporated fuel vapors based on the determination by the temperature detecting means. Ohkuma et al teach a forced switching cycle setting means for variably setting the cycle for forcedly switching the combustion method from stratified combustion to homogeneous combustion according to the fuel temperature.

4. Any inquiry concerning this communication or earlier communications from the examiner should be directed to Hai H. Huynh whose telephone number is (703) 306-9183. The examiner can normally be reached on Monday through Thursday from 7:30 am to 6:00 pm.

The fax phone numbers for the organization where this application or proceeding is assigned are (703) 308-7766.

Hai H. Huynh
Examiner
Art Unit 3747

HHH
July 8, 2002

Tony M. Argenbright
Primary Examiner
Art Unit 3747

Notice of References Cited	Application/Control No. 09/861,983	Applicant(s)/Patent Under Reexamination HALLERON ET AL.	
	Examiner Hai H. Huynh	Art Unit 3747	Page 1 of 1

U.S. PATENT DOCUMENTS

*		Document Number Country Code-Number-Kind Code	Date MM-YYYY	Name	Classification
	A	US-4,986,070	01-1991	Abe, Kazuo	123/520
	B	US-5,245,975	09-1993	Ito, Yasusi	123/520
	C	US-6,176,217	01-2001	Ohkuma et al.	123/295
	D	US-6,192,672	02-2001	Kerns, James Michael	123/520
	E	US-			
	F	US-			
	G	US-			
	H	US-			
	I	US-			
	J	US-			
	K	US-			
	L	US-			
	M	US-			

FOREIGN PATENT DOCUMENTS

*		Document Number Country Code-Number-Kind Code	Date MM-YYYY	Country	Name	Classification
	N	JP-21606	01-2002	Japan	Halleron et al	F02D-41/04
	O					
	P					
	Q					
	R					
	S					
	T					

NON-PATENT DOCUMENTS

*		Include as applicable: Author, Title Date, Publisher, Edition or Volume, Pertinent Pages)
	U	
	V	
	W	
	X	

*A copy of this reference is not being furnished with this Office action. (See MPEP § 707.05(a).)
Dates in MM-YYYY format are publication dates. Classifications may be US or foreign.

PETITIONER'S EXHIBIT 1002
US PATENT NO. 6,561,166

File History Content Report

The following content is missing from the original file history record obtained from the United States Patent and Trademark Office. No additional information is available.

Document Date - 2001-07-19

Document Title - USPTO Communication Re: Change of Address

This page is not part of the official USPTO record. It has been determined that content identified on this document is missing from the original file history record.

3747

TRANSMITTAL LETTER			Case No. 10541/467 (199-1758)
Serial No. 09/861,983	Filing Date May 16, 2001	Examiner Not Assigned	Group Art Unit 3747
Inventor(s) IAN HALLERON ET AL.			
Title of Invention PURGE FUEL CANISTER MEASUREMENT METHOD AND SYSTEM			

OIPE
DEC 03 2001
PATENT & TRADEMARK OFFICE

TO THE COMMISSIONER FOR PATENTS

Transmitted herewith is Supplemental Information Disclosure Statement (in dup.), International Search Report, PTO 1449, 5 cited references, and return post card.

☐ Small entity status of this application under 37 CFR § 1.27 has been established by verified statement previously submitted.

☐ A verified statement to establish small entity status under 37 CFR §§ 1.9 and 1.27 is enclosed.

☐ Petition for a _____month extension of time.

☒ No additional fee is required.

☐ The fee has been calculated as shown below:

	Claims Remaining After Amendment		Highest No. Previously Paid For	Present Extra	Small Entity Rate	Small Entity Add'l Fee	or	Other Than Small Entity Rate	Other Than Small Entity Add'l Fee
Total		Minus			x $9=			x $18=	
Indep.		Minus			x 40=			x $80=	
First Presentation of Multiple Dep. Claim					+$135=			+ $270=	
					Total add'l fee	$		Total add'l fee	$

☐ Please charge Deposit Account No. 06-1500 (VISTEON GLOBAL TECHNOLOGIES, INC.) in the amount of $_____. A duplicate copy of this sheet is enclosed.

☐ A check in the amount of $_____ to cover the filing fee is enclosed.

☒ The Commissioner is hereby authorized to charge payment of any additional filing fees required under 37 CFR § 1.16 and any patent application processing fees under 37 CFR § 1.17 associated with this communication or credit any overpayment to Deposit Account No. 06-1500. A duplicate copy of this sheet is enclosed.

☒ I hereby petition under 37 CFR § 1.136(a) for any extension of time required to ensure that this paper is timely filed. Please charge any associated fees which have not otherwise been paid to Deposit Account No. 23-1925. A duplicate copy of this sheet is enclosed.

Respectfully submitted,

Richard K. Clark

Richard K. Clark
Registration No. 40,560
Attorney for Applicant

BRINKS HOFER GILSON & LIONE
P.O. BOX 10395
CHICAGO, ILLINOIS 60610
(312) 321-4200

I hereby certify that this correspondence is being deposited with the United States Postal Service as first class mail, with sufficient postage, in an envelope addressed to: Commissioner for Patents, Washington, D.C. 20231, on 11/27/01

Date: 11/27/01 Signature: Richard K. Clark

rev. Dec.-00
F:\COMMON\RKC\Templates-RKC\TRANSMITTAL LETTER.doc

RECEIVED
DEC -6 2001
TC 3700 MAIL ROOM

CERTIFICATE OF MAILING

I certify this correspondence is being deposited with the United States Postal Service as first class mail in an envelope, with sufficient postage, addressed to: Commissioner for Patents, Washington, D.C. 20231

OIPE
DEC 03 2001
PATENT & TRADEMARK OFFICE

11/27/01
Date of Deposit

Richard K. Clark
Name of Applicant, Assignee or Registered Representative

Signature

Our Case No.: 10541/467
199-1758

IN THE UNITED STATES PATENT AND TRADEMARK OFFICE

In re Application of:

IAN HALLERON ET AL.

Serial No.: 09/861,983

Filing Date: May 16, 2001

For: PURGE FUEL CANISTER MEASUREMENT METHOD AND SYSTEM

Examiner: Not Assigned

Group Art Unit No.: 3747

RECEIVED
DEC -6 2001
TC 3700 MAIL ROOM

SUPPLEMENTAL INFORMATION DISCLOSURE STATEMENT

Commissioner for Patents
Washington, D.C. 20231

Dear Sir:

In compliance with the duty of disclosure under 37 C.F.R. § 1.56, Applicants respectfully request that this Supplemental Information Disclosure Statement be entered and the documents listed on the attached Form PTO-1449 be considered by the Examiner and made of record. Copies of the listed documents required by 37 C.F.R. § 1.98(a)(2) are enclosed for the convenience of the Examiner.

In accordance with 37 C.F.R. § 1.97(g),(h), this Supplemental Information Disclosure Statement is not to be construed as a representation that a search has been made and is

not to be construed to be an admission that the information cited is, or is considered to be, material to patentability as defined in 37 C.F.R. § 1.56(b).

This Supplemental Information Disclosure Statement is being filed prior to the receipt of the first Official Action reflecting an examination on the merits. In addition, Applicants certify in accordance with 37 C.F.R. § 1.97(e)(1) that each item of the information disclosed in this Supplemental Information Disclosure Statement was first cited in a communication from a foreign patent office in a counterpart foreign application not more than three months prior to filing of the present statement. Enclosed is a copy of the International Search Report showing the "Documents Considered to be Relevant" section. Hence, Applicants believe this Supplemental Information Disclosure Statement to be timely filed in accordance with 37 C.F.R. § 1.97.

No fees are believed to be due in connection with filing of this Supplemental Information Disclosure Statement, however, should any fees under 37 C.F.R. §§ 1.16 to 1.21 be deemed necessary for any reason relating to these material, the Commissioner is hereby authorized to deduct said fees from Visteon Global Technologies, Inc. Deposit Account No. 06-1500. A duplicate copy of this document is enclosed.

Applicants respectfully request that the listed documents be made of record in the present case.

Respectfully submitted,

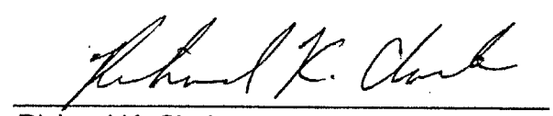

Richard K. Clark
Registration No. 40,560
Attorney for Applicants

BRINKS HOFER GILSON & LIONE
P.O. Box 10395
Chicago, IL 60610
(312) 321-4200

PETITIONER'S EXHIBIT 1002
US PATENT NO. 6,561,166

FORM PTO-1449	SERIAL NO. 09/861,983	CASE NO. 10541/467 (199-1758)
LIST OF PATENTS AND PUBLICATIONS FOR APPLICANT'S INFORMATION DISCLOSURE STATEMENT	FILING DATE May 16, 2001	GROUP ART UNIT 3747
(use several sheets if necessary)	APPLICANT(S): Ian Halleron et al.	

O I P E JC2
DEC 03 2001
PATENT & TRADEMARK OFFICE

REFERENCE DESIGNATION **U.S. PATENT DOCUMENTS**

EXAMINER INITIAL		DOCUMENT NUMBER	DATE	NAME	CLASS/ SUBCLASS	FILING DATE

FOREIGN PATENT DOCUMENTS

EXAMINER INITIAL		DOCUMENT NUMBER	DATE	COUNTRY	CLASS/ SUBCLASS	TRANSLATION YES	TRANSLATION NO
HH	B1	EP 1074706 A2	2/7/2001	EPO			
HH	B2	EP 0488 254 A1	6/3/1992	EPO			
HH	B3	6137223	5/17/1994	JP			X

EXAMINER INITIAL	OTHER ART (Including Author, Title, Date, Pertinent Pages, etc.)

RECEIVED
DEC -6 2001
TC 3700 MAIL ROOM

EXAMINER HAI HUYNH	DATE CONSIDERED 7/1/02

EXAMINER: Initial if reference considered, whether or not citation is in conformance with MPEP 609; Draw line through citation if not in conformance and not considered. Include copy of this form with next communication to applicant.

Rev. Dec.-99
F:\COMMON\RKC\Visteon (10541)\10541-467\FORM PTO 1449.doc

PTO
DEC 03 2001
PATENT & TRADEMARK

TRANSMITTAL LETTER			Case No. 10541/467 (199-1758)
Serial No. 09/861,983	Filing Date May 16, 2001	Examiner Not Assigned	Group Art Unit 3747
Inventor(s) IAN HALLERON ET AL.			
Title of Invention PURGE FUEL CANISTER MEASUREMENT METHOD AND SYSTEM			

RECEIVED
DEC -6 2001
TC 3700 MAIL ROOM

TO THE COMMISSIONER FOR PATENTS

Transmitted herewith is Supplemental Information Disclosure Statement (in dup.), International Search Report, PTO 1449, 3 cited references, and return post card.

☐ Small entity status of this application under 37 CFR § 1.27 has been established by verified statement previously submitted.

☐ A verified statement to establish small entity status under 37 CFR §§ 1.9 and 1.27 is enclosed.

☐ Petition for a _____month extension of time.

☒ No additional fee is required.

☐ The fee has been calculated as shown below:

	Claims Remaining After Amendment		Highest No. Previously Paid For	Present Extra	Small Entity Rate	Small Entity Add'l Fee	or	Other Than Small Entity Rate	Other Than Small Entity Add'l Fee
Total		Minus			x $9=			x $18=	
Indep.		Minus			x 40=			x $80=	
First Presentation of Multiple Dep. Claim					+$135=			+ $270=	
					Total add'l fee	$		Total add'l fee	$

☐ Please charge Deposit Account No. 06-1500 (VISTEON GLOBAL TECHNOLOGIES, INC.) in the amount of $_____. A duplicate copy of this sheet is enclosed.

☐ A check in the amount of $_____ to cover the filing fee is enclosed.

☒ The Commissioner is hereby authorized to charge payment of any additional filing fees required under 37 CFR § 1.16 and any patent application processing fees under 37 CFR § 1.17 associated with this communication or credit any overpayment to Deposit Account No. 06-1500. A duplicate copy of this sheet is enclosed.

☒ I hereby petition under 37 CFR § 1.136(a) for any extension of time required to ensure that this paper is timely filed. Please charge any associated fees which have not otherwise been paid to Deposit Account No. 23-1925. A duplicate copy of this sheet is enclosed.

Respectfully submitted,

Richard K. Clark
Registration No. 40,560
Attorney for Applicant

BRINKS HOFER GILSON & LIONE
P.O. BOX 10395
CHICAGO, ILLINOIS 60610
(312) 321-4200

I hereby certify that this correspondence is being deposited with the United States Postal Service as first class mail, with sufficient postage, in an envelope addressed to: Commissioner for Patents, Washington, D.C. 20231, on 11/27/01

Date: 11/27/01 Signature: Richard K. Clark

rev. Dec.-00
F:\COMMON\RKC\Templates-RKC\TRANSMITTAL LETTER.doc

#3

CERTIFICATE OF MAILING

I certify this correspondence is being deposited with the United States Postal Service as first class mail in an envelope, with sufficient postage, addressed to: Commissioner for Patents, Washington, D.C. 20231

OIPE 1624 DEC 03 2001 PATENT & TRADEMARK OFFICE

11/27/01
Date of Deposit

Richard K. Clark
Name of Applicant, Assignee or Registered Representative

Signature

RECEIVED DEC -6 2001 TC 3700 MAIL ROOM

Our Case No.: 10541/467
199-1758

IN THE UNITED STATES PATENT AND TRADEMARK OFFICE

In re Application of:

IAN HALLERON ET AL.

Serial No.: 09/861,983

Filing Date: May 16, 2001

For: PURGE FUEL CANISTER MEASUREMENT METHOD AND SYSTEM

Examiner: Not Assigned

Group Art Unit No.: 3747

SUPPLEMENTAL INFORMATION DISCLOSURE STATEMENT

Commissioner for Patents
Washington, D.C. 20231

Dear Sir:

In compliance with the duty of disclosure under 37 C.F.R. § 1.56, Applicants respectfully request that this Supplemental Information Disclosure Statement be entered and the documents listed on the attached Form PTO-1449 be considered by the Examiner and made of record. Copies of the listed documents required by 37 C.F.R. § 1.98(a)(2) are enclosed for the convenience of the Examiner.

In accordance with 37 C.F.R. § 1.97(g),(h), this Supplemental Information Disclosure Statement is not to be construed as a representation that a search has been made and is

not to be construed to be an admission that the information cited is, or is considered to be, material to patentability as defined in 37 C.F.R. § 1.56(b).

This Supplemental Information Disclosure Statement is being filed prior to the receipt of the first Official Action reflecting an examination on the merits. In addition, Applicants certify in accordance with 37 C.F.R. § 1.97(e)(1) that each item of the information disclosed in this Supplemental Information Disclosure Statement was first cited in a communication from a foreign patent office in a counterpart foreign application not more than three months prior to filing of the present statement. Enclosed is a copy of the International Search Report showing the "Documents Considered to be Relevant" section. Hence, Applicants believe this Supplemental Information Disclosure Statement to be timely filed in accordance with 37 C.F.R. § 1.97.

No fees are believed to be due in connection with filing of this Supplemental Information Disclosure Statement, however, should any fees under 37 C.F.R. §§ 1.16 to 1.21 be deemed necessary for any reason relating to these material, the Commissioner is hereby authorized to deduct said fees from Visteon Global Technologies, Inc. Deposit Account No. 06-1500. A duplicate copy of this document is enclosed.

Applicants respectfully request that the listed documents be made of record in the present case.

Respectfully submitted,

Richard K. Clark
Registration No. 40,560
Attorney for Applicants

BRINKS HOFER GILSON & LIONE
P.O. Box 10395
Chicago, IL 60610
(312) 321-4200

PETITIONER'S EXHIBIT 1002
US PATENT NO. 6,561,166

COPY

FORM PTO-1449	SERIAL NO. 09/861,983	CASE NO. 10541/467 (199-1758)
LIST OF PATENTS AND PUBLICATIONS FOR APPLICANT'S INFORMATION DISCLOSURE STATEMENT	FILING DATE May 16, 2001	GROUP ART UNIT 3747
(use several sheets if necessary)	APPLICANT(S): Ian Halleron et al.	

IP EAST DEC 03 2001 PATENT & TRADEMARK OFFICE

REFERENCE DESIGNATION **U.S. PATENT DOCUMENTS**

EXAMINER INITIAL		DOCUMENT NUMBER	DATE	NAME	CLASS/ SUBCLASS	FILING DATE

FOREIGN PATENT DOCUMENTS

EXAMINER INITIAL		DOCUMENT NUMBER	DATE	COUNTRY	CLASS/ SUBCLASS	TRANSLATION YES	TRANSLATION NO
HH	B1	EP 1074706 A2	2/7/2001	EPO			
HH	B2	EP 0488 254 A1	6/3/1992	EPO			
HH	B3	6137223	5/17/1994	JP			X

EXAMINER INITIAL	OTHER ART (Including Author, Title, Date, Pertinent Pages, etc.)

RECEIVED
DEC -6 2001
TC 3700 MAIL ROOM

EXAMINER	HAI HUYNH	DATE CONSIDERED	7/1/02

EXAMINER: Initial if reference considered, whether or not citation is in conformance with MPEP 609; Draw line through citation if not in conformance and not considered. Include copy of this form with next communication to applicant.

Rev. Dec.-99
F:\COMMON\RKC\Visteon (10541)\10541-467\FORM PTO 1449.doc

OIPE JC179
OCT 15 2002
PATENT & TRADEMARK OFFICE

TRANSMITTAL LETTER			Case No. 10541/467 (199-1758)
Serial No. 09/861,983	Filing Date May 16, 2001	Examiner Hai Huynh	Group Art Unit 3747
Inventor(s) IAN HALLERON ET AL.			
Title of Invention PURGE FUEL CANISTER MEASUREMENT METHOD AND SYSTEM			

TO THE COMMISSIONER FOR PATENTS -

Transmitted herewith is Amendment and return post card.

☐ Small entity status of this application under 37 CFR § 1.27 has been established by verified statement previously submitted.

☐ A verified statement to establish small entity status under 37 CFR §§ 1.9 and 1.27 is enclosed.

☐ Petition for a _____month extension of time.

☒ No additional fee is required.

☐ The fee has been calculated as shown below:

RECEIVED
OCT 22 2002
TECHNOLOGY CENTER R3700

	Claims Remaining After Amendment		Highest No. Previously Paid For	Present Extra	Small Entity Rate	Small Entity Add'l Fee	or	Other Than Small Entity Rate	Other Than Small Entity Add'l Fee
Total		Minus			x $9 =			x $18 =	
Indep.		Minus			x 40 =			x $80 =	
First Presentation of Multiple Dep. Claim					+ $135 =			+ $270 =	
					Total add'l fee	$		Total add'l fee	$

☐ Please charge Deposit Account No. 06-1500 (VISTEON GLOBAL TECHNOLOGIES, INC.) in the amount of $_____. A duplicate copy of this sheet is enclosed.

☐ A check in the amount of $_____ to cover the filing fee is enclosed.

☒ The Commissioner is hereby authorized to charge payment of any additional filing fees required under 37 CFR § 1.16 and any patent application processing fees under 37 CFR § 1.17 associated with this communication or credit any overpayment to Deposit Account No. 06-1500. A duplicate copy of this sheet is enclosed.

☒ I hereby petition under 37 CFR § 1.136(a) for any extension of time required to ensure that this paper is timely filed. Please charge any associated fees which have not otherwise been paid to Deposit Account No. 23-1925. A duplicate copy of this sheet is enclosed.

Respectfully submitted,

Richard K. Clark
Registration No. 40,560
Attorney for Applicant

BRINKS HOFER GILSON & LIONE
P.O. BOX 10395
CHICAGO, ILLINOIS 60610
(312) 321-4200

I hereby certify that this correspondence is being deposited with the United States Postal Service as first class mail, with sufficient postage, in an envelope addressed to: Commissioner for Patents, Washington, D.C. 20231, on 10/10/02

Date: 10/10/02 Signature:

PE SC:179
15 2002
TRADEMARK OFFICE

3747

TRANSMITTAL LETTER			Case No. 10541/467 (199-1758)
Serial No. 09/861,983	Filing Date May 16, 2001	Examiner Hai Huynh	Group Art Unit 3747
Inventor(s) IAN HALLERON ET AL.			
Title of Invention PURGE FUEL CANISTER MEASUREMENT METHOD AND SYSTEM			

TO THE COMMISSIONER FOR PATENTS

Transmitted herewith is Amendment and return post card.

☐ Small entity status of this application under 37 CFR § 1.27 has been established by verified statement previously submitted.

☐ A verified statement to establish small entity status under 37 CFR §§ 1.9 and 1.27 is enclosed.

☐ Petition for a _____month extension of time.

☒ No additional fee is required.

☐ The fee has been calculated as shown below:

RECEIVED
OCT 2 2 2002
TECHNOLOGY CENTER R3700

	Claims Remaining After Amendment		Highest No. Previously Paid For	Present Extra	Small Entity Rate	Small Entity Add'l Fee	or	Other Than Small Entity Rate	Other Than Small Entity Add'l Fee
Total		Minus			x $9=			x $18=	
Indep.		Minus			x 40=			x $80=	
First Presentation of Multiple Dep. Claim					+$135 =			+ $270=	
					Total add'l fee	$		Total add'l fee	$

☐ Please charge Deposit Account No. 06-1500 (VISTEON GLOBAL TECHNOLOGIES, INC.) in the amount of $_____. A duplicate copy of this sheet is enclosed.

☐ A check in the amount of $_____ to cover the filing fee is enclosed.

☒ The Commissioner is hereby authorized to charge payment of any additional filing fees required under 37 CFR § 1.16 and any patent application processing fees under 37 CFR § 1.17 associated with this communication or credit any overpayment to Deposit Account No. 06-1500. A duplicate copy of this sheet is enclosed.

☒ I hereby petition under 37 CFR § 1.136(a) for any extension of time required to ensure that this paper is timely filed. Please charge any associated fees which have not otherwise been paid to Deposit Account No. 23-1925. A duplicate copy of this sheet is enclosed.

Respectfully submitted,

Richard K. Clark
Registration No. 40,560
Attorney for Applicant

BRINKS HOFER GILSON & LIONE
P.O. BOX 10395
CHICAGO, ILLINOIS 60610
(312) 321-4200

I hereby certify that this correspondence is being deposited with the United States Postal Service as first class mail, with sufficient postage, in an envelope addressed to: Commissioner for Patents, Washington, D.C. 20231, on 10/10/02

Date: 10/10/02 Signature: Richard K. Clark

#9
10-22-02
A.F.

I certify this correspondence is being deposited with the United States Postal Service with sufficient postage as first class mail in an envelope addressed to: Commissioner for Patents, Washington, D.C. 20231

10/10/02
Date of Deposit

Richard K. Clark, 40,560
Name of Applicant, Assignee or Registered Representative

Signature

Our Case No.: 10541/467
199-1758

IN THE UNITED STATES PATENT AND TRADEMARK OFFICE

In re Application of:

IAN HALLERON ET AL.

Serial No.: 09/861,983

Filing Date: May 16, 2001

For: PURGE FUEL CANISTER MEASUREMENT METHOD AND SYSTEM

Examiner: Hai Huynh

Group Art Unit No.: 3747

RECEIVED
OCT 22 2002
TECHNOLOGY CENTER R3700

AMENDMENT

Commissioner for Patents
Washington, D.C. 20231

Dear Sir:

In reply to the Office Action dated July 10, 2002, Applicants have timely filed this Amendment by Certificate of Mailing. Applicants respectfully request the Examiner to withdraw the rejections to this application and to grant allowance of this Application in view of the following remarks and amended claims.

Please amend this application as follows:

A

In the Claims:

Please cancel Claims 14 and 15 without prejudice. Please rewrite Claims 1, 11-13, 16, and 22-24 in their entirety as follows (the changes in these Claims from the previous version are shown in Appendix A, with brackets for deleted matter and underlines for added matter):

1. (Amended) A method of controlling a direct injection spark ignited internal combustion engine that is capable of operating in a stratified mode where fuel is injected during a compression stroke of the engine and a homogeneous mode where fuels is injected during an intake stroke of the engine, the internal combustion engine having a catalytic converter and an NO_x trap, comprising:

measuring a first temperature of an NO_x trap that is in contact with an exhaust gas exhausted from a combustion chamber while the engine is operating in the stratified mode;

enabling evaporated fuel vapors to enter the combustion chamber at a flow rate while the engine is operating in the stratified mode;

measuring a second temperature of the NO_x trap while the engine is operating in the stratified mode; and

adjusting the flow rate of the evaporated fuel vapors as a function of the second temperature when the second temperature is within a lower temperature threshold and an upper temperature threshold.

11. (Amended) The method of claim 1, further comprising:

reducing the flow rate of the evaporated fuel vapors into the combustion chamber as a function of the difference between the first and second temperatures when the NO_x trap temperature exceeds the upper temperature threshold.

12. (Amended) An engine controller for a direct injection spark ignited engine that is capable of operating a stratified mode and a homogeneous mode, comprising:

an engine control module that is capable of switching the engine between the stratified and homogeneous modes and adjusting a flow rate of evaporated fuel vapors as a function of a temperature of a NO_x trap.

PETITIONER'S EXHIBIT 1002
US PATENT NO. 6,561,166

13. (Amended) The engine controller of claim 12, further comprising:

a temperature sensor that is capable of measuring the temperature of the NO_x trap in an exhaust system of the engine;

wherein a carbon-based canister receives fuel vapors from a gasoline tank and provides evaporated fuel vapors to an intake manifold of the engine.

16. (Amended) The engine controller of claim 13, wherein the engine control module switches the engine from the stratified mode to the homogeneous mode when the NO_x trap temperature is below a lower temperature threshold.

22. (Amended) The engine controller of claim 21, wherein the control module adjusts the flow rate of the evaporated fuel vapors as a function of the NO_x trap temperature.

23. (Amended) The engine controller of claim 20, wherein the engine control module switches the engine from the homogeneous mode only when the NO_x trap temperature is within a temperature range.

24. (Amended) A canister purge valve controller for a direct injection spark ignited internal combustion engine, comprising:

a temperature sensor interface that receives a temperature of a NO_x trap in the engine's exhaust system;

an engine mode controller that switches the engine between a stratified mode and a homogeneous mode; and

a canister purge valve interface that controls a flow rate of evaporated fuel vapors into the engine's intake manifold via a canister purge valve;

wherein the flow rate of evaporated fuel vapors is a function of the temperature received by the temperature sensor interface and the engine's mode.

REMARKS

The remaining issues regarding this application are as follows:

PETITIONER'S EXHIBIT 1002
US PATENT NO. 6,561,166

- The Examiner rejected Claims 1-24 under 35 USC §102(e) as being anticipated by Kerns (U.S. Patent No. 6,192,672).

35 USC § 102(e)

The Examiner rejected Claims 1-24 under 35 USC §102(e) as being anticipated by Kerns. Applicants respectfully submit that Kerns does not describe or suggest the present invention. Kerns discloses an engine control method having multiple emission control devices. Kerns uses *both* a downstream emission control device temperature and an upstream emission control device temperature to control when fuel vapors are purged into the combustion chamber (See Col. 2, lines 2-10, and lines 24-32; and Col 7, lines 29-55). In Kerns, fuel vapors are purged when the *downstream* emission control device temperature is below a predetermined threshold and the *upstream* emission control device temperature is above a predetermined temperature (See Col. 2, lines 6-10, and lines 27-32; and Col. 7, lines 49-55). Kerns describes the upstream emission control device as a catalytic converter and the downstream emission control device as an NO_x trap (See Figure 1; Col. 3, lines 59-60; and Col. 4, lines 18-20).

In contrast, the present invention adjusts fuel vapors in an internal combustion engine when the temperature of a NO_x trap is within upper and lower temperature thresholds. The internal combustion engine has a catalytic converter and the NO_x trap. Applicants have amended independent claims 1, 12, and 24 for further clarification. Applicants have cancelled Claims 14 and 15 without prejudice. Applicants have amended depended claims 11, 13, 22, and 23 to have corresponding terms with the independent claims. No new matter has been added. The specification describes the catalyst as a NO_x trap (see page 7, line 7).

For the foregoing reasons, Applicants respectfully submit that independent Claims 1, 12, and 24 as amended are not anticipated by Kerns. Claims 2-11, 13, and 16-23 are dependent directly or indirectly upon independent Claims 1, 12, and 24. These dependent claims are allowable as being dependent upon allowable base claims. Therefore, Applicants respectfully request the Examiner to withdraw the rejections to Claims 1-13 and 16-24 as amended.

Attorney Docket Number

Applicants respectfully request the Examiner to correct the Attorney Docket Number to read as 10541/467.

A

PETITIONER'S EXHIBIT 1002
US PATENT NO. 6,561,166

SUMMARY

Pending Claims 1-13 and 16-24 as amended are patentable. Applicants respectfully requests the Examiner grant early allowance of this application. The Examiner is invited to contact the undersigned attorneys for the Applicants via telephone if such communication would expedite this application.

Respectfully submitted,

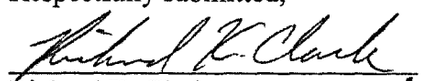

Richard K. Clark
Registration No. 40,560
Attorney for Applicant

BRINKS HOFER GILSON & LIONE
P.O. BOX 10395
CHICAGO, ILLINOIS 60610
(312) 321-4200

A

PETITIONER'S EXHIBIT 1002
~~US PATENT NO. 6,561,166~~

APPENDIX A

1. (Amended) A method of controlling a direct injection spark ignited internal combustion engine that is capable of operating in a stratified mode where fuel is injected during a compression stroke of the engine and a homogeneous mode where fuels is injected during an intake stroke of the engine, the internal combustion engine having a catalytic converter and an NO_x trap, comprising:

measuring a first temperature of an NO_x trap [a catalyst] that is in contact with an exhaust gas exhausted from a combustion chamber while the engine is operating in the stratified mode;

enabling evaporated fuel vapors to enter the combustion chamber at a flow rate while the engine is operating in the stratified mode;

measuring a second temperature of the NO_x trap [catalyst] while the engine is operating in the stratified mode; and

adjusting the flow rate of the evaporated fuel vapors as a function of the second temperature when the second temperature is within a lower temperature threshold and an upper temperature threshold.

11. (Amended) The method of claim 1, further comprising:

reducing the flow rate of the evaporated fuel vapors into the combustion chamber as a function of the difference between the first and second temperatures when the [catalyst] NO_x trap temperature exceeds the upper temperature threshold.

12. (Amended) An engine controller for a direct injection spark ignited engine that is capable of operating a stratified mode and a homogeneous mode, comprising:

an engine control module that is capable of switching the engine between the stratified and homogeneous modes and adjusting a flow rate of evaporated fuel vapors as a function of a temperature of a [catalyst] NO_x trap.

13. (Amended) The engine controller of claim 12, further comprising:

A

a temperature sensor that is capable of measuring the temperature of the [catalyst] NO_x trap in an exhaust system of the engine;

wherein a carbon-based canister receives fuel vapors from a gasoline tank and provides evaporated fuel vapors to an intake manifold of the engine.

16. (Amended) The engine controller of claim 13, wherein the engine control module switches the engine from the stratified mode to the homogeneous mode when the NO_x trap [catalyst] temperature is below a lower temperature threshold.

22. (Amended) The engine controller of claim 21, wherein the control module adjusts the flow rate of the evaporated fuel vapors as a function of the [catalyst] NO_x trap temperature.

23. (Amended) The engine controller of claim 20, wherein the engine control module switches the engine from the homogeneous mode only when the [catalyst] NO_x trap temperature is within a temperature range.

24. (Amended) A canister purge valve controller for a direct injection spark ignited internal combustion engine, comprising:

a temperature sensor interface that receives a temperature of a [catalyst] NO_x trap in the engine's exhaust system;

an engine mode controller that switches the engine between a stratified mode and a homogeneous mode; and

a canister purge valve interface that controls a flow rate of evaporated fuel vapors into the engine's intake manifold via a canister purge valve;

wherein the flow rate of evaporated fuel vapors is a function of the temperature received by the temperature sensor interface and the engine's mode.

A

2 3

UNITED STATES PATENT AND TRADEMARK OFFICE

UNITED STATES DEPARTMENT OF COMMERCE
United States Patent and Trademark Office
Address: COMMISSIONER OF PATENTS AND TRADEMARKS
Washington, D.C. 20231
www.uspto.gov

APPLICATION NO.	FILING DATE	FIRST NAMED INVENTOR	ATTORNEY DOCKET NO.	CONFIRMATION NO.
09/861,983	05/16/2001	Ian Halleron	10541/388-1	6796

7590 12/30/2002

Steven L. Oberholtzer
BRINKS HOFER GILSON & LIONE
P.O. Box 10395
Chicago, IL 60610

EXAMINER
HUYNH, HAI H

ART UNIT	PAPER NUMBER
3747	

DATE MAILED: 12/30/2002

Please find below and/or attached an Office communication concerning this application or proceeding.

PTO-90C (Rev. 07-01)

111

Office Action Summary	Application No.	Applicant(s)	
	09/861,983	HALLERON ET AL.	
	Examiner	Art Unit	
	Hai H. Huynh	3747	

-- The MAILING DATE of this communication appears on the cover sheet with the correspondence address --

Period for Reply

A SHORTENED STATUTORY PERIOD FOR REPLY IS SET TO EXPIRE 3 MONTH(S) FROM THE MAILING DATE OF THIS COMMUNICATION.

- Extensions of time may be available under the provisions of 37 CFR 1.136(a). In no event, however, may a reply be timely filed after SIX (6) MONTHS from the mailing date of this communication.
- If the period for reply specified above is less than thirty (30) days, a reply within the statutory minimum of thirty (30) days will be considered timely.
- If NO period for reply is specified above, the maximum statutory period will apply and will expire SIX (6) MONTHS from the mailing date of this communication.
- Failure to reply within the set or extended period for reply will, by statute, cause the application to become ABANDONED (35 U.S.C. § 133).
- Any reply received by the Office later than three months after the mailing date of this communication, even if timely filed, may reduce any earned patent term adjustment. See 37 CFR 1.704(b).

Status

1)☒ Responsive to communication(s) filed on *15 October 2002* .

2a)☒ This action is **FINAL**. 2b)☐ This action is non-final.

3)☐ Since this application is in condition for allowance except for formal matters, prosecution as to the merits is closed in accordance with the practice under *Ex parte Quayle*, 1935 C.D. 11, 453 O.G. 213.

Disposition of Claims

4)☒ Claim(s) *1-13 and 16-24* is/are pending in the application.

4a) Of the above claim(s) _____ is/are withdrawn from consideration.

5)☒ Claim(s) *1-11* is/are allowed.

6)☒ Claim(s) *12,13 and 16-24* is/are rejected.

7)☐ Claim(s) _____ is/are objected to.

8)☐ Claim(s) _____ are subject to restriction and/or election requirement.

Application Papers

9)☐ The specification is objected to by the Examiner.

10)☐ The drawing(s) filed on _____ is/are: a)☐ accepted or b)☐ objected to by the Examiner.

Applicant may not request that any objection to the drawing(s) be held in abeyance. See 37 CFR 1.85(a).

11)☐ The proposed drawing correction filed on _____ is: a)☐ approved b)☐ disapproved by the Examiner.

If approved, corrected drawings are required in reply to this Office action.

12)☐ The oath or declaration is objected to by the Examiner.

Priority under 35 U.S.C. §§ 119 and 120

13)☐ Acknowledgment is made of a claim for foreign priority under 35 U.S.C. § 119(a)-(d) or (f).

a)☐ All b)☐ Some * c)☐ None of:

1.☐ Certified copies of the priority documents have been received.

2.☐ Certified copies of the priority documents have been received in Application No. _____ .

3.☐ Copies of the certified copies of the priority documents have been received in this National Stage application from the International Bureau (PCT Rule 17.2(a)).

* See the attached detailed Office action for a list of the certified copies not received.

14)☒ Acknowledgment is made of a claim for domestic priority under 35 U.S.C. § 119(e) (to a provisional application).

a) ☐ The translation of the foreign language provisional application has been received.

15)☐ Acknowledgment is made of a claim for domestic priority under 35 U.S.C. §§ 120 and/or 121.

Attachment(s)

1) ☐ Notice of References Cited (PTO-892)
2) ☐ Notice of Draftsperson's Patent Drawing Review (PTO-948)
3) ☐ Information Disclosure Statement(s) (PTO-1449) Paper No(s) _____ .
4) ☐ Interview Summary (PTO-413) Paper No(s). _____ .
5) ☐ Notice of Informal Patent Application (PTO-152)
6) ☐ Other: .

PETITIONER'S EXHIBIT 1002
~~US PATENT NO. 6,561,166~~

DETAILED ACTION

Response to Amendment

Claims 1-13, 16-24 are in the case.

Claims 14-15 have been canceled.

Claim Rejections - 35 USC § 102

The following is a quotation of the appropriate paragraphs of 35 U.S.C. 102 that form the basis for the rejections under this section made in this Office action:

> A person shall be entitled to a patent unless –
>
> (e) the invention was described in-
> (1) an application for patent, published under section 122(b), by another filed in the United States before the invention by the applicant for patent, except that an international application filed under the treaty defined in section 351(a) shall have the effect under this subsection of a national application published under section 122(b) only if the international application designating the United States was published under Article 21(2)(a) of such treaty in the English language; or
> (2) a patent granted on an application for patent by another filed in the United States before the invention by the applicant for patent, except that a patent shall not be deemed filed in the United States for the purposes of this subsection based on the filing of an international application filed under the treaty defined in section 351(a).

1. Claims 12-13, 16-24 are rejected under 35 U.S.C. 102(e) as being anticipated by Kerns (6,192,672).

Kerns teaches an engine control that switches the engine between the stratified and homogeneous modes and adjust a flow rate of evaporated fuel vapors as a function of a temperature of a NOx trap (see Figure 5 step 513).

Allowable Subject Matter

2. Claims 1-11 are allowed.

Response to Arguments

3. Applicant's arguments filed on October 15, 2002 have been fully considered but they are not persuasive because Figure 5 step 513 show the adjusting of flow rate of evaporated fuel as a function of a temperature of a NOx trap.

Conclusion

4. **THIS ACTION IS MADE FINAL.** Applicant is reminded of the extension of time policy as set forth in 37 CFR 1.136(a).

A shortened statutory period for reply to this final action is set to expire THREE MONTHS from the mailing date of this action. In the event a first reply is filed within TWO MONTHS of the mailing date of this final action and the advisory action is not mailed until after the end of the THREE-MONTH shortened statutory period, then the shortened statutory period will expire on the date the advisory action is mailed, and any extension fee pursuant to 37 CFR 1.136(a) will be calculated from the mailing date of the advisory action. In no event, however, will the statutory period for reply expire later than SIX MONTHS from the mailing date of this final action.

Any inquiry concerning this communication or earlier communications from the examiner should be directed to Hai H. Huynh whose telephone number is (703) 306-9183. The examiner can normally be reached on Monday through Thursday from 7:30 am to 6:00 pm.

The fax phone numbers for the organization where this application or proceeding is assigned are (703) 308-7766.

Hai H. Huynh
Examiner
Art Unit 3747

HHH
December 28, 2002

Henry C. Yuen
Supervisory Patent Examiner
Group 3700

OIPE JC48
JAN 2 8 2003
PATENT & TRADEMARK OFFICE

AF / ~~3747~~ 3700

TRANSMITTAL LETTER			Case No. 10541/467 (199-1758)
Serial No. 09/861,983	Filing Date May 16, 2001	Examiner Hai Huynh	Group Art Unit 3747
Inventor(s) IAN HALLERON ET AL.			
Title of Invention PURGE FUEL CANISTER MEASUREMENT METHOD AND SYSTEM			

TO THE COMMISSIONER FOR PATENTS

Transmitted herewith is Amendment and return post card.

☐ Small entity status of this application under 37 CFR § 1.27 has been established by verified statement previously submitted.

☐ A verified statement to establish small entity status under 37 CFR §§ 1.9 and 1.27 is enclosed.

☐ Petition for a _____month extension of time.

☒ No additional fee is required.

☐ The fee has been calculated as shown below:

RECEIVED
JAN 3 1 2003
TECHNOLOGY CENTER R3700

	Claims Remaining After Amendment		Highest No. Previously Paid For	Present Extra	Small Entity Rate	Small Entity Add'l Fee	or	Other Than Small Entity Rate	Other Than Small Entity Add'l Fee
Total		Minus			x $9 =			x $18 =	
Indep.		Minus			x 40 =			x $80 =	
First Presentation of Multiple Dep. Claim					+ $135 =			+ $270 =	
					Total add'l fee	$		Total add'l fee	$

☐ Please charge Deposit Account No. 06-1500 (VISTEON GLOBAL TECHNOLOGIES, INC.) in the amount of $_____. A duplicate copy of this sheet is enclosed.

☐ A check in the amount of $_____ to cover the filing fee is enclosed.

☒ The Commissioner is hereby authorized to charge payment of any additional filing fees required under 37 CFR § 1.16 and any patent application processing fees under 37 CFR § 1.17 associated with this communication or credit any overpayment to Deposit Account No. 06-1500. A duplicate copy of this sheet is enclosed.

☒ I hereby petition under 37 CFR § 1.136(a) for any extension of time required to ensure that this paper is timely filed. Please charge any associated fees which have not otherwise been paid to Deposit Account No. 23-1925. A duplicate copy of this sheet is enclosed.

Respectfully submitted,

Richard K. Clark

Richard K. Clark
Registration No. 40,560
Attorney for Applicants

BRINKS HOFER GILSON & LIONE
P.O. BOX 10395
CHICAGO, ILLINOIS 60610
(312) 321-4200

I hereby certify that this correspondence is being deposited with the United States Postal Service as first class mail, with sufficient postage, in an envelope addressed to: Commissioner for Patents, Washington, D.C. 20231, on 01/21/03

Date: 01/21/03 Signature: Richard K. Clark

OIPE
JAN 2 8 2003
PATENT & TRADEMARK OFFICE
#C48

TRANSMITTAL LETTER			Case No. 10541/467 (199-1758)
Serial No. 09/861,983	Filing Date May 16, 2001	Examiner Hai Huynh	Group Art Unit 3747
Inventor(s) IAN HALLERON ET AL.			
Title of Invention PURGE FUEL CANISTER MEASUREMENT METHOD AND SYSTEM			

TO THE COMMISSIONER FOR PATENTS

Transmitted herewith is Amendment and return post card.

☐ Small entity status of this application under 37 CFR § 1.27 has been established by verified statement previously submitted.

☐ A verified statement to establish small entity status under 37 CFR §§ 1.9 and 1.27 is enclosed.

☐ Petition for a _____month extension of time.

☒ No additional fee is required.

☐ The fee has been calculated as shown below:

RECEIVED
JAN 3 1 2003
TECHNOLOGY CENTER R3700

	Claims Remaining After Amendment		Highest No. Previously Paid For	Present Extra	Small Entity Rate	Small Entity Add'l Fee	or	Other Than Small Entity Rate	Other Than Small Entity Add'l Fee
Total		Minus			x $9 =			x $18 =	
Indep.		Minus			x 40 =			x $80 =	
First Presentation of Multiple Dep. Claim					+ $135 =			+ $270 =	
					Total add'l fee	$		Total add'l fee	$

☐ Please charge Deposit Account No. 06-1500 (VISTEON GLOBAL TECHNOLOGIES, INC.) in the amount of $_____. A duplicate copy of this sheet is enclosed.

☐ A check in the amount of $_____ to cover the filing fee is enclosed.

☒ The Commissioner is hereby authorized to charge payment of any additional filing fees required under 37 CFR § 1.16 and any patent application processing fees under 37 CFR § 1.17 associated with this communication or credit any overpayment to Deposit Account No. 06-1500. A duplicate copy of this sheet is enclosed.

☒ I hereby petition under 37 CFR § 1.136(a) for any extension of time required to ensure that this paper is timely filed. Please charge any associated fees which have not otherwise been paid to Deposit Account No. 23-1925. A duplicate copy of this sheet is enclosed.

Respectfully submitted,

Richard K. Clark

Richard K. Clark
Registration No. 40,560
Attorney for Applicants

BRINKS HOFER GILSON & LIONE
P.O. BOX 10395
CHICAGO, ILLINOIS 60610
(312) 321-4200

I hereby certify that this correspondence is being deposited with the United States Postal Service as first class mail, with sufficient postage, in an envelope addressed to: Commissioner for Patents, Washington, D.C. 20231, on 01/21/03

Date: 01/21/03 Signature: Richard K. Clark

OIPE JC4B
JAN 28 2003
PATENT & TRADEMARK OFFICE

I certify this correspondence is being deposited with the United States Postal Service with sufficient postage as first class mail in an envelope addressed to:

Commissioner for Patents, Washington, D.C. 20231

01/21/03
Date of Deposit

Richard K. Clark
Name of Applicant, Assignee or Registered Representative

Signature

RECEIVED
JAN 31 2003
TECHNOLOGY CENTER R3700

Our File No.10541/467
(199-1758)

IN THE UNITED STATES PATENT AND TRADEMARK OFFICE

In re Application of:

IAN HALLERON ET AL.

Serial No. 09/861,983

Filing Date: May 16, 2001

For PURGE FUEL CANISTER MEASUREMENT METHOD AND SYSTEM

Examiner H. Huynh

Group Art Unit No. 3747

AMENDMENT

Commissioner for Patents
Washington, D.C. 20231

Dear Sir:

In reply to the Office Action dated December 30, 2002, Applicants have timely filed this Amendment by Certificate of Mailing. Applicants respectfully request the Examiner to consider and enter this Amendment as it places the application in form for allowance.

Please amend this application as follows:

PETITIONER'S EXHIBIT 1002
US PATENT NO. 6,561,166

In the Claims:

Please cancel Claims 12, 13, and 16-24 without prejudice.

REMARKS

The remaining issues regarding this application are the Examiner has rejected Claims 12, 13, and 16-24 under 35 U.S.C. 102(e) as being anticipated by Kerns (U.S. Patent No. 6,192,672). Applicants have cancelled Claims 12, 13, and 16-24 without prejudice. Applicants respectfully request the Examiner to withdrawn these rejections to this Application.

Allowable Subject Matter

Applicants gratefully acknowledge the Examiner has allowed Claims 1-11.

SUMMARY

Pending Claims 1-11 are patentable and were allowed by the Examiner. Applicants respectfully request the Examiner grant early allowance of this application. The Examiner is invited to contact the undersigned attorneys for the Applicants via telephone if such communication would expedite this application.

Respectfully submitted,

Richard K. Clark
Registration No. 40,560
Attorney for Applicants

BRINKS HOFER GILSON & LIONE
P.O. BOX 10395
CHICAGO, ILLINOIS 60610
(312) 321-4200

PETITIONER'S EXHIBIT 1002
~~US PATENT NO. 6,561,166~~

Transaction History Date 2003-02-13
Date information retrieved from USPTO Patent Application Information Retrieval (PAIR) system records at www.uspto.gov

Notice of Allowability	Application No.	Applicant(s)	
	09/861,983	HALLERON ET AL.	
	Examiner	Art Unit	
	Hai H. Huynh	3747	

-- The MAILING DATE of this communication appears on the cover sheet with the correspondence address--

All claims being allowable, PROSECUTION ON THE MERITS IS (OR REMAINS) CLOSED in this application. If not included herewith (or previously mailed), a Notice of Allowance (PTOL-85) or other appropriate communication will be mailed in due course. **THIS NOTICE OF ALLOWABILITY IS NOT A GRANT OF PATENT RIGHTS.** This application is subject to withdrawal from issue at the initiative of the Office or upon petition by the applicant. See 37 CFR 1.313 and MPEP 1308.

1. ☒ This communication is responsive to *Amendment filed on January 28, 2003*.
2. ☒ The allowed claim(s) is/are *1-11*.
3. ☒ The drawings filed on *16 May 2001* are accepted by the Examiner.
4. ☐ Acknowledgment is made of a claim for foreign priority under 35 U.S.C. § 119(a)-(d) or (f).
   a) ☐ All b) ☐ Some* c) ☐ None of the:
      1. ☐ Certified copies of the priority documents have been received.
      2. ☐ Certified copies of the priority documents have been received in Application No. _____.
      3. ☐ Copies of the certified copies of the priority documents have been received in this national stage application from the International Bureau (PCT Rule 17.2(a)).

   * Certified copies not received: _____.
5. ☒ Acknowledgment is made of a claim for domestic priority under 35 U.S.C. § 119(e) (to a provisional application).
   (a) ☐ The translation of the foreign language provisional application has been received.
6. ☐ Acknowledgment is made of a claim for domestic priority under 35 U.S.C. §§ 120 and/or 121.

Applicant has THREE MONTHS FROM THE "MAILING DATE" of this communication to file a reply complying with the requirements noted below. Failure to timely comply will result in ABANDONMENT of this application. **THIS THREE-MONTH PERIOD IS NOT EXTENDABLE**

7. ☐ A SUBSTITUTE OATH OR DECLARATION must be submitted. Note the attached EXAMINER'S AMENDMENT or NOTICE OF INFORMAL PATENT APPLICATION (PTO-152) which gives reason(s) why the oath or declaration is deficient.

8. ☐ CORRECTED DRAWINGS must be submitted.
   (a) ☐ including changes required by the Notice of Draftsperson's Patent Drawing Review (PTO-948) attached
      1) ☐ hereto or 2) ☐ to Paper No. ____.
   (b) ☐ including changes required by the proposed drawing correction filed _____, which has been approved by the Examiner.
   (c) ☐ including changes required by the attached Examiner's Amendment / Comment or in the Office action of Paper No. _____.

Identifying indicia such as the application number (see 37 CFR 1.84(c)) should be written on the drawings in the top margin (not the back) of each sheet. The drawings should be filed as a separate paper with a transmittal letter addressed to the Official Draftsperson.

9. ☐ DEPOSIT OF and/or INFORMATION about the deposit of BIOLOGICAL MATERIAL must be submitted. Note the attached Examiner's comment regarding REQUIREMENT FOR THE DEPOSIT OF BIOLOGICAL MATERIAL.

Attachment(s)

1☐ Notice of References Cited (PTO-892)
3☐ Notice of Draftperson's Patent Drawing Review (PTO-948)
5☐ Information Disclosure Statements (PTO-1449), Paper No. ____.
7☐ Examiner's Comment Regarding Requirement for Deposit of Biological Material
2☐ Notice of Informal Patent Application (PTO-152)
4☐ Interview Summary (PTO-413), Paper No.____.
6☐ Examiner's Amendment/Comment
8☐ Examiner's Statement of Reasons for Allowance
9☐ Other

Henry C. Yuen
Supervisory Patent Examiner
3700

PETITIONER'S EXHIBIT 1002
US PATENT NO. 6,561,166

UNITED STATES PATENT AND TRADEMARK OFFICE

UNITED STATES DEPARTMENT OF COMMERCE
United States Patent and Trademark Office
Address: COMMISSIONER OF PATENTS AND TRADEMARKS
Washington, D.C. 20231
www.uspto.gov

NOTICE OF ALLOWANCE AND FEE(S) DUE

7590 02/13/2003

Steven L. Oberholtzer
BRINKS HOFER GILSON & LIONE
P.O. Box 10395
Chicago, IL 60610

EXAMINER	
HUYNH, HAI H	
ART UNIT	**CLASS-SUBCLASS**
3747	123-519000

DATE MAILED: 02/13/2003

APPLICATION NO.	FILING DATE	FIRST NAMED INVENTOR	ATTORNEY DOCKET NO.	CONFIRMATION NO.
09/861,983	05/16/2001	Ian Halleron	10541/388-1	6796

TITLE OF INVENTION: PURGE FUEL CANISTER MEASUREMENT METHOD AND SYSTEM

APPLN. TYPE	SMALL ENTITY	ISSUE FEE	PUBLICATION FEE	TOTAL FEE(S) DUE	DATE DUE
nonprovisional	NO	$1300	$300	$1600	05/13/2003

THE APPLICATION IDENTIFIED ABOVE HAS BEEN EXAMINED AND IS ALLOWED FOR ISSUANCE AS A PATENT. PROSECUTION ON THE MERITS IS CLOSED. THIS NOTICE OF ALLOWANCE IS NOT A GRANT OF PATENT RIGHTS. THIS APPLICATION IS SUBJECT TO WITHDRAWAL FROM ISSUE AT THE INITIATIVE OF THE OFFICE OR UPON PETITION BY THE APPLICANT. SEE 37 CFR 1.313 AND MPEP 1308.

THE ISSUE FEE AND PUBLICATION FEE (IF REQUIRED) MUST BE PAID WITHIN THREE MONTHS FROM THE MAILING DATE OF THIS NOTICE OR THIS APPLICATION SHALL BE REGARDED AS ABANDONED. THIS STATUTORY PERIOD CANNOT BE EXTENDED. SEE 35 U.S.C. 151. THE ISSUE FEE DUE INDICATED ABOVE REFLECTS A CREDIT FOR ANY PREVIOUSLY PAID ISSUE FEE APPLIED IN THIS APPLICATION. THE PTOL-85B (OR AN EQUIVALENT) MUST BE RETURNED WITHIN THIS PERIOD EVEN IF NO FEE IS DUE OR THE APPLICATION WILL BE REGARDED AS ABANDONED.

HOW TO REPLY TO THIS NOTICE:

I. Review the SMALL ENTITY status shown above.

If the SMALL ENTITY is shown as YES, verify your current SMALL ENTITY status:

A. If the status is the same, pay the TOTAL FEE(S) DUE shown above.

B. If the status is changed, pay the PUBLICATION FEE (if required) and twice the amount of the ISSUE FEE shown above and notify the United States Patent and Trademark Office of the change in status, or

If the SMALL ENTITY is shown as NO:

A. Pay TOTAL FEE(S) DUE shown above, or

B. If applicant claimed SMALL ENTITY status before, or is now claiming SMALL ENTITY status, check the box below and enclose the PUBLICATION FEE and 1/2 the ISSUE FEE shown above.

☐ Applicant claims SMALL ENTITY status. See 37 CFR 1.27.

II. PART B - FEE(S) TRANSMITTAL should be completed and returned to the United States Patent and Trademark Office (USPTO) with your ISSUE FEE and PUBLICATION FEE (if required). Even if the fee(s) have already been paid, Part B - Fee(s) Transmittal should be completed and returned. If you are charging the fee(s) to your deposit account, section "4b" of Part B - Fee(s) Transmittal should be completed and an extra copy of the form should be submitted.

III. All communications regarding this application must give the application number. Please direct all communications prior to issuance to Box ISSUE FEE unless advised to the contrary.

IMPORTANT REMINDER: Utility patents issuing on applications filed on or after Dec. 12, 1980 may require payment of maintenance fees. It is patentee's responsibility to ensure timely payment of maintenance fees when due.

PTOL-85 (REV. 04-02) Approved for use through 01/31/2004.

PETITIONER'S EXHIBIT 1002
US PATENT NO. 6,561,166

PART B - FEE(S) TRANSMITTAL

Complete and send this form, together with applicable fee(s), to: Mail Box ISSUE FEE
Commissioner for Patents
Washington, D.C. 20231
Fax (703)746-4000

INSTRUCTIONS: This form should be used for transmitting the ISSUE FEE and PUBLICATION FEE (if required). Blocks 1 through 4 should be completed where appropriate. All further correspondence including the Patent, advance orders and notification of maintenance fees will be mailed to the current correspondence address as indicated unless corrected below or directed otherwise in Block 1, by (a) specifying a new correspondence address; and/or (b) indicating a separate "FEE ADDRESS" for maintenance fee notifications.

CURRENT CORRESPONDENCE ADDRESS (Note: Legibly mark-up with any corrections or use Block 1)

7590 02/13/2003

Steven L. Oberholtzer
BRINKS HOFER GILSON & LIONE
P.O. Box 10395
Chicago, IL 60610

Note: A certificate of mailing can only be used for domestic mailings of the Fee(s) Transmittal. This certificate cannot be used for any other accompanying papers. Each additional paper, such as an assignment or formal drawing, must have its own certificate of mailing or transmission.

Certificate of Mailing or Transmission

I hereby certify that this Fee(s) Transmittal is being deposited with the United States Postal Service with sufficient postage for first class mail in an envelope addressed to the Box Issue Fee address above, or being facsimile transmitted to the USPTO, on the date indicated below.

(Depositor's name)

(Signature)

(Date)

APPLICATION NO.	FILING DATE	FIRST NAMED INVENTOR	ATTORNEY DOCKET NO.	CONFIRMATION NO.
09/861,983	05/16/2001	Ian Halleron	10541/388-1	6796

TITLE OF INVENTION: PURGE FUEL CANISTER MEASUREMENT METHOD AND SYSTEM

APPLN. TYPE	SMALL ENTITY	ISSUE FEE	PUBLICATION FEE	TOTAL FEE(S) DUE	DATE DUE
nonprovisional	NO	$1300	$300	$1600	05/13/2003

EXAMINER	ART UNIT	CLASS-SUBCLASS
HUYNH, HAI H	3747	123-519000

1. Change of correspondence address or indication of "Fee Address" (37 CFR 1.363).

❑ Change of correspondence address (or Change of Correspondence Address form PTO/SB/122) attached.

❑ "Fee Address" indication (or "Fee Address" Indication form PTO/SB/47; Rev 03-02 or more recent) attached. **Use of a Customer Number is required.**

2. For printing on the patent front page, list (1) the names of up to 3 registered patent attorneys or agents OR, alternatively, (2) the name of a single firm (having as a member a registered attorney or agent) and the names of up to 2 registered patent attorneys or agents. If no name is listed, no name will be printed.

1 _____

2 _____

3 _____

3. ASSIGNEE NAME AND RESIDENCE DATA TO BE PRINTED ON THE PATENT (print or type)

PLEASE NOTE: Unless an assignee is identified below, no assignee data will appear on the patent. Inclusion of assignee data is only appropriate when an assignment has been previously submitted to the USPTO or is being submitted under separate cover. Completion of this form is NOT a substitute for filing an assignment.

(A) NAME OF ASSIGNEE (B) RESIDENCE: (CITY and STATE OR COUNTRY)

Please check the appropriate assignee category or categories (will not be printed on the patent) ❑ individual ❑ corporation or other private group entity ❑ government

4a. The following fee(s) are enclosed:

❑ Issue Fee

❑ Publication Fee

❑ Advance Order - # of Copies _____

4b. Payment of Fee(s):

❑ A check in the amount of the fee(s) is enclosed.

❑ Payment by credit card. Form PTO-2038 is attached.

❑ The Commissioner is hereby authorized by charge the required fee(s), or credit any overpayment, to Deposit Account Number _____ (enclose an extra copy of this form).

Commissioner for Patents is requested to apply the Issue Fee and Publication Fee (if any) or to re-apply any previously paid issue fee to the application identified above.

(Authorized Signature) (Date)

NOTE; The Issue Fee and Publication Fee (if required) will not be accepted from anyone other than the applicant; a registered attorney or agent; or the assignee or other party in interest as shown by the records of the United States Patent and Trademark Office.

This collection of information is required by 37 CFR 1.311. The information is required to obtain or retain a benefit by the public which is to file (and by the USPTO to process) an application. Confidentiality is governed by 35 U.S.C. 122 and 37 CFR 1.14. This collection is estimated to take 12 minutes to complete, including gathering, preparing, and submitting the completed application form to the USPTO. Time will vary depending upon the individual case. Any comments on the amount of time you require to complete this form and/or suggestions for reducing this burden, should be sent to the Chief Information Officer, U.S. Patent and Trademark Office, U.S. Department of Commerce, Washington, D.C. 20231. DO NOT SEND FEES OR COMPLETED FORMS TO THIS ADDRESS. SEND TO: Commissioner for Patents, Washington, DC 20231.

Under the Paperwork Reduction Act of 1995, no persons are required to respond to a collection of information unless it displays a valid OMB control number.

TRANSMIT THIS FORM WITH FEE(S)

PETITIONER'S EXHIBIT 1002
US PATENT NO. 6,561,166

UNITED STATES PATENT AND TRADEMARK OFFICE

UNITED STATES DEPARTMENT OF COMMERCE
United States Patent and Trademark Office
Address: COMMISSIONER OF PATENTS AND TRADEMARKS
Washington, D.C. 20231
www.uspto.gov

APPLICATION NO.	FILING DATE	FIRST NAMED INVENTOR	ATTORNEY DOCKET NO.	CONFIRMATION NO.
09/861,983	05/16/2001	Ian Halleron	10541/388-1	6796

7590 02/13/2003

Steven L. Oberholtzer
BRINKS HOFER GILSON & LIONE
P.O. Box 10395
Chicago, IL 60610

EXAMINER	
HUYNH, HAI H	
ART UNIT	**PAPER NUMBER**
3747	

DATE MAILED: 02/13/2003

Determination of Patent Term Adjustment under 35 U.S.C. 154 (b)
(application filed on or after May 29, 2000)

The patent term adjustment to date is 0 days. If the issue fee is paid on the date that is three months after the mailing date of this notice and the patent issues on the Tuesday before the date that is 28 weeks (six and a half months) after the mailing date of this notice, the term adjustment will be 0 days.

If a continued prosecution application (CPA) was filed in the above-identified application, the filing date that determines patent term adjustment is the filing date of the most recent CPA.

Applicant will be able to obtain more detailed information by accessing the Patent Application Information Retrieval (PAIR) system. (http://pair.uspto.gov)

Any questions regarding the patent term extension or adjustment determination should be directed to the Office of Patent Legal Administration at (703)305-1383.

PTOL-85 (REV. 04-02) Approved for use through 01/31/2004.

PETITIONER'S EXHIBIT 1002
US PATENT NO. 6,561,166

UNITED STATES PATENT AND TRADEMARK OFFICE

UNITED STATES DEPARTMENT OF COMMERCE
United States Patent and Trademark Office
Address: COMMISSIONER OF PATENTS AND TRADEMARKS
Washington, D.C. 20231
www.uspto.gov

APPLICATION NO.	FILING DATE	FIRST NAMED INVENTOR	ATTORNEY DOCKET NO.	CONFIRMATION NO.
09/861,983	05/16/2001	Ian Halleron	10541/388-1	6796

7590 02/13/2003

Steven L. Oberholtzer
BRINKS HOFER GILSON & LIONE
P.O. Box 10395
Chicago, IL 60610
UNITED STATES

EXAMINER	
HUYNH, HAI H	
ART UNIT	**PAPER NUMBER**
3747	

DATE MAILED: 02/13/2003

Notice of Fee Increase on January 1, 2003

If a reply to a "Notice of Allowance and Fee(s) Due" is filed in the Office on or after January 1, 2003, then the amount due will be higher than that set forth in the "Notice of Allowance and Fee(s) Due" since there will be an increase in fees effective on January 1, 2003. See Revision of Patent and Trademark Fees for Fiscal Year 2003; Final Rule, 67 Fed. Reg. 70847, 70849 (November 27, 2002).

The current fee schedule is accessible from: http://www.uspto.gov/main/howtofees.htm.

If the issue fee paid is the amount shown on the "Notice of Allowance and Fee(s) Due," but not the correct amount in view of the fee increase, a "Notice to Pay Balance of Issue Fee" will be mailed to applicant. In order to avoid processing delays associated with mailing of a "Notice to Pay Balance of Issue Fee," if the response to the Notice of Allowance and Fee(s) due form is to be filed on or after January 1, 2003 (or mailed with a certificate of mailing on or after January 1, 2003), the issue fee paid should be the fee that is required at the time the fee is paid. If the issue fee was previously paid, and the response to the "Notice of Allowance and Fee(s) Due" includes a request to apply a previously-paid issue fee to the issue fee now due, then the difference between the issue fee amount at the time the response is filed and the previously paid issue fee should be paid. See Manual of Patent Examining Procedure, Section 1308.01 (Eighth Edition, August 2001).

Questions relating to issue and publication fee payments should be directed to the Customer Service Center of the Office of Patent Publication at (703) 305-8283.

PTOL-85 (REV. 04-02) Approved for use through 01/31/2004.

PETITIONER'S EXHIBIT 1002
US PATENT NO. 6,561,166

BEST COPY

OIPE

MAR 19 2003

PATENT & TRADEMARK

HM

B$

PART B - FEE(S) TRANSMITTAL

Complete and send this form, together with applicable fee(s), to: Mail Box ISSUE FEE
Commissioner for Patents
Washington, D.C. 20231
Fax (703)746-4000

INSTRUCTIONS: This form should be used for transmitting the ISSUE FEE and PUBLICATION FEE (if required). Blocks 1 through 4 should be completed where appropriate. All further correspondence including the Patent, advance orders and notification of maintenance fees will be mailed to the current correspondence address as indicated unless corrected below or directed otherwise in Block 1, by (a) specifying a new correspondence address; and/or (b) indicating a separate "FEE ADDRESS" for maintenance fee notifications.

CURRENT CORRESPONDENCE ADDRESS (Note: Legibly mark-up with any corrections or use Block 1)

7590 02/13/2003

Steven L. Oberholtzer
BRINKS HOFER GILSON & LIONE
P.O. Box 10395
Chicago, IL 60610

03/24/2003 HMARZI2 00000089 061500 09861983

01 FC:1501 1300.00 CH
02 FC:1504 300.00 CH

Note: A certificate of mailing can only be used for domestic mailings of the Fee(s) Transmittal. This certificate cannot be used for any other accompanying papers. Each additional paper, such as an assignment or formal drawing, must have its own certificate of mailing or transmission.

Certificate of Mailing or Transmission
I hereby certify that this Fee(s) Transmittal is being deposited with the United States Postal Service with sufficient postage for first class mail in an envelope addressed to the Box Issue Fee address above, or being facsimile transmitted to the USPTO, on the date indicated below.

Richard K. Clark, Reg. No. 40,560 (Depositor's name)
Richard K. Clark (Signature)
03/14/03 (Date)

APPLICATION NO.	FILING DATE	FIRST NAMED INVENTOR	ATTORNEY DOCKET NO.	CONFIRMATION NO.
09/861,983	05/16/2001	Ian Halleron	10541/388-1	6796

TITLE OF INVENTION: PURGE FUEL CANISTER MEASUREMENT METHOD AND SYSTEM

APPLN. TYPE	SMALL ENTITY	ISSUE FEE	PUBLICATION FEE	TOTAL FEE(S) DUE	DATE DUE
nonprovisional	NO	$1300	$300	$1600	05/13/2003

EXAMINER	ART UNIT	CLASS-SUBCLASS
HUYNH, HAI H	3747	123-519000

1. Change of correspondence address or indication of "Fee Address" (37 CFR 1.363).

☐ Change of correspondence address (or Change of Correspondence Address form PTO/SB/122) attached.

☐ "Fee Address" indication (or "Fee Address" Indication form PTO/SB/47; Rev 03-02 or more recent) attached. Use of a Customer Number is required.

2. For printing on the patent front page, list (1) the names of up to 3 registered patent attorneys or agents OR, alternatively, (2) the name of a single firm (having as a member a registered attorney or agent) and the names of up to 2 registered patent attorneys or agents. If no name is listed, no name will be printed.

1 Brinks Hofer Gilson & Lione
2
3

3. ASSIGNEE NAME AND RESIDENCE DATA TO BE PRINTED ON THE PATENT (print or type)

PLEASE NOTE: Unless an assignee is identified below, no assignee data will appear on the patent. Inclusion of assignee data is only appropriate when an assignment has been previously submitted to the USPTO or is being submitted under separate cover. Completion of this form is NOT a substitute for filing an assignment.

(A) NAME OF ASSIGNEE: Visteon Global Technologies, Inc.

(B) RESIDENCE: (CITY and STATE OR COUNTRY): Dearborn, Michigan

Please check the appropriate assignee category or categories (will not be printed on the patent) ☐ individual ☒ corporation or other private group entity ☐ government

4a. The following fee(s) are enclosed:

☒ Issue Fee
☒ Publication Fee
☐ Advance Order - # of Copies _____

4b. Payment of Fee(s):

☐ A check in the amount of the fee(s) is enclosed.
☐ Payment by credit card. Form PTO-2038 is attached.
☒ The Commissioner is hereby authorized by charge the required fee(s), or credit any overpayment, to Deposit Account Number 06-1500 (enclose an extra copy of this form).

Commissioner for Patents is requested to apply the Issue Fee and Publication Fee (if any) or to re-apply any previously paid issue fee to the application identified above.

(Authorized Signature) Richard K. Clark (Date) 03/14/03

NOTE: The Issue Fee and Publication Fee (if required) will not be accepted from anyone other than the applicant; a registered attorney or agent; or the assignee or other party in interest as shown by the records of the United States Patent and Trademark Office.

This collection of information is required by 37 CFR 1.311. The information is required to obtain or retain a benefit by the public which is to file (and by the USPTO to process) an application. Confidentiality is governed by 35 U.S.C. 122 and 37 CFR 1.14. This collection is estimated to take 12 minutes to complete, including gathering, preparing, and submitting the completed application form to the USPTO. Time will vary depending upon the individual case. Any comments on the amount of time you require to complete this form and/or suggestions for reducing this burden, should be sent to the Chief Information Officer, U.S. Patent and Trademark Office, U.S. Department of Commerce, Washington, D.C. 20231. DO NOT SEND FEES OR COMPLETED FORMS TO THIS ADDRESS. SEND TO: Commissioner for Patents, Washington, DC 20231.

Under the Paperwork Reduction Act of 1995, no persons are required to respond to a collection of information unless it displays a valid OMB control number.

TRANSMIT THIS FORM WITH FEE(S)

PETITIONER'S EXHIBIT 1002
US PATENT NO. 6,561,166

File History Content Report

The following content is missing from the original file history record obtained from the United States Patent and Trademark Office. No additional information is available.

Document Date - 2003-05-13

Document Title - USPTO Grant

This page is not part of the official USPTO record. It has been determined that content identified on this document is missing from the original file history record.

504528526 08/31/2017

PATENT ASSIGNMENT COVER SHEET

Electronic Version v1.1
Stylesheet Version v1.2

EPAS ID: PAT4575232

SUBMISSION TYPE:	NEW ASSIGNMENT
NATURE OF CONVEYANCE:	ASSIGNMENT

CONVEYING PARTY DATA

Name	Execution Date
GODO KAISHA IP BRIDGE	09/02/2016

RECEIVING PARTY DATA

Name:	MOBILE AUTOMOTIVE TECHNOLOGIES, LLC
Street Address:	951 GOVERNMENT STREET, SUITE B
City:	MOBILE
State/Country:	ALABAMA
Postal Code:	36604

PROPERTY NUMBERS Total: 42

Property Type	Number
Patent Number:	6345604
Patent Number:	6347680
Patent Number:	6379281
Patent Number:	6443128
Patent Number:	6510839
Patent Number:	6557540
Patent Number:	6561166
Patent Number:	6571157
Patent Number:	6581565
Patent Number:	6581574
Patent Number:	6588260
Patent Number:	6598581
Patent Number:	6607302
Patent Number:	6609497
Patent Number:	6612287
Patent Number:	6619106
Patent Number:	6644115
Patent Number:	6736122
Patent Number:	6741441
Patent Number:	6752741

Property Type	Number
Patent Number:	6757149
Patent Number:	6758885
Patent Number:	6763804
Patent Number:	6766788
Patent Number:	6817592
Patent Number:	6847882
Patent Number:	6856209
Patent Number:	6874362
Patent Number:	6976477
Patent Number:	6988031
Patent Number:	7089894
Patent Number:	7116081
Patent Number:	7124963
Patent Number:	7137577
Patent Number:	7143501
Patent Number:	7168637
Patent Number:	7191755
Patent Number:	7198207
Patent Number:	7293554
Patent Number:	7487761
Patent Number:	7712451
Patent Number:	7982358

CORRESPONDENCE DATA

Fax Number: (302)449-9010

Correspondence will be sent to the e-mail address first; if that is unsuccessful, it will be sent using a fax number, if provided; if that is unsuccessful, it will be sent via US Mail.

Phone: 3024499010
Email: mmcclain@devlinlawfirm.com
Correspondent Name: TIMOTHY DEVLIN
Address Line 1: 1306 N. BROOM STREET
Address Line 2: 1ST FLOOR
Address Line 4: WILMINGTON, DELAWARE 19806

NAME OF SUBMITTER:	TIMOTHY DEVLIN
SIGNATURE:	/TIMOTHY DEVLIN/
DATE SIGNED:	08/31/2017
	This document serves as an Oath/Declaration (37 CFR 1.63).

Total Attachments: 3
source=MobileAutoSignedPAA#page1.tif

source=MobileAutoSignedPAA#page2.tif
source=MobileAutoSignedPAA#page3.tif

EXHIBIT B

U.S. PATENT ASSIGNMENT

WHEREAS, Godo Kaisha IP Bridge 1 ("Assignor"), is the owner of (i) United States Patent and Patent Applications listed in Schedule A and the following (ii) through (iv) to the extent Assignor owns, controls or has the right to license or enforce them at any time: (ii) any patents or patent applications that claim priority directly or indirectly from any of the foregoing patent(s) in subsection (i), or from which priority is directly or indirectly claimed by any such patent(s) in subsection (i), or that have common priority with any such patent(s) in subsection (i); (iii) any foreign counterparts, foreign related patents, continuations, divisionals, continuations-in-part, extensions, substitutions, reissues, renewals and all results of oppositions, reexaminations, supplemental examinations, requests for continued examination and other review procedures of any of the foregoing in subsections (i) and (ii); and (iv) all patents issuing on patent applications covered by any of the foregoing subsections (i) through (iii) (together the "Assigned Patents").

WHEREAS, Mobile Automotive Technologies, LLC, an Alabama limited liability company ("Assignee") is desirous of acquiring title in and to the Assigned Patents.

WHEREAS, Assignor is the owner of any and all right, title, and interest in and to the Assigned Patents.

WHEREAS, Assignor desires to sell, assign, and transfer all its right, title, and interest in the Assigned Patents to Assignee, and Assignee desires to obtain all such right, title, and interest in the Assigned Patents from Assignor.

NOW, THEREFORE, in consideration of good and valuable consideration, the receipt and adequacy of which is hereby acknowledged, Assignor hereby sells, assigns, transfers and conveys unto Assignee, its permitted successors and assigns, all of Assignor's right, title, and interest in and to the Assigned Patents, together with all claims, demands, or causes of action that Assignor has or might have by reason of any infringement of the Assigned Patents prior to the effective date of this assignment, including the right to sue and collect damages for all past, present and future infringement and all lost profits resulting therefrom.

IN WITNESS WHEREOF, this Agreement has been executed by duly authorized representatives of the Parties on the dates below.

Signature

Hideyuki Ogata
Name

Date: Sept. 2, 2016

Signature

KEVIN C. BRADY
Name

Date: AUG 27, 2016

PETITIONER'S EXHIBIT 1002
US PATENT NO. 6,561,166

SCHEDULE A

Patents:

US6345604
US6347680
US6379281
US6443128
US6510839
US6557540
US6561166
US6571157
US6581565
US6581574
US6588260
US6598581
US6607302
US6609497
US6612287
US6619106
US6644115
US6736122
US6741441
US6752741
US6757149
US6758885
US6763804
US6766788
US6817592
US6847882
US6856209
US6874362
US6976477
US6988031
US7089894
US7116081
US7124963
US7137577
US7143501
US7168637
US7191755
US7198207

PETITIONER'S EXHIBIT 1002
US PATENT NO. 6,561,166

US7293554
US7487761
US7712451
US7982358

DE103 44 494.7-34
GB2385013
GB2422688
JP4235485

PETITIONER'S EXHIBIT 1002
US PATENT NO. 6,561,166

504528590 08/31/2017

PATENT ASSIGNMENT COVER SHEET

Electronic Version v1.1
Stylesheet Version v1.2

EPAS ID: PAT4575296

SUBMISSION TYPE:	NEW ASSIGNMENT
NATURE OF CONVEYANCE:	ASSIGNMENT

CONVEYING PARTY DATA

Name	Execution Date
GODO KAISHA IP BRIDGE	11/02/2016

RECEIVING PARTY DATA

Name:	MOBILE AUTOMOTIVE TECHNOLOGIES, LLC
Street Address:	951 GOVERNMENT STREET, SUITE B
City:	MOBILE
State/Country:	ALABAMA
Postal Code:	36604

PROPERTY NUMBERS Total: 42

Property Type	Number
Patent Number:	6345604
Patent Number:	6347680
Patent Number:	6379281
Patent Number:	6443128
Patent Number:	6510839
Patent Number:	6557540
Patent Number:	6561166
Patent Number:	6571157
Patent Number:	6581565
Patent Number:	6581574
Patent Number:	6588260
Patent Number:	6598581
Patent Number:	6607302
Patent Number:	6609497
Patent Number:	6612287
Patent Number:	6619106
Patent Number:	6644115
Patent Number:	6736122
Patent Number:	6741441
Patent Number:	6752741

Property Type	Number
Patent Number:	6757149
Patent Number:	6758885
Patent Number:	6763804
Patent Number:	6766788
Patent Number:	6817592
Patent Number:	6847882
Patent Number:	6856209
Patent Number:	6874362
Patent Number:	6976477
Patent Number:	6988031
Patent Number:	7089894
Patent Number:	7116081
Patent Number:	7124963
Patent Number:	7137577
Patent Number:	7143501
Patent Number:	7168637
Patent Number:	7191755
Patent Number:	7198207
Patent Number:	7293554
Patent Number:	7487761
Patent Number:	7712451
Patent Number:	7982358

CORRESPONDENCE DATA

Fax Number: (302)449-9010

Correspondence will be sent to the e-mail address first; if that is unsuccessful, it will be sent using a fax number, if provided; if that is unsuccessful, it will be sent via US Mail.

Phone: 3024499010
Email: mmcclain@devlinlawfirm.com
Correspondent Name: TIMOTHY DEVLIN
Address Line 1: 1306 N. BROOM STREET
Address Line 2: 1ST FLOOR
Address Line 4: WILMINGTON, DELAWARE 19806

NAME OF SUBMITTER:	TIMOTHY DEVLIN
SIGNATURE:	/TIMOTHY DEVLIN/
DATE SIGNED:	08/31/2017
	This document serves as an Oath/Declaration (37 CFR 1.63).

Total Attachments: 3
source=MobileAutoAmend-2#page1.tif

source=MobileAutoAmend-2#page2.tif
source=MobileAutoAmend-2#page3.tif

504528678 08/31/2017

PATENT ASSIGNMENT COVER SHEET

Electronic Version v1.1
Stylesheet Version v1.2

EPAS ID: PAT4575384

SUBMISSION TYPE:	NEW ASSIGNMENT
NATURE OF CONVEYANCE:	ASSIGNMENT

CONVEYING PARTY DATA

Name	Execution Date
MOBILE AUTOMOTIVE TECHNOLOGIES, LLC	08/28/2017

RECEIVING PARTY DATA

Name:	MICHIGAN MOTOR TECHNOLOGIES LLC
Street Address:	2360 ORCHARD LAKE ROAD SUITE 100
City:	SYLVAN LAKE
State/Country:	MICHIGAN
Postal Code:	48320

PROPERTY NUMBERS Total: 42

Property Type	Number
Patent Number:	6345604
Patent Number:	6347680
Patent Number:	6379281
Patent Number:	6443128
Patent Number:	6510839
Patent Number:	6557540
Patent Number:	6561166
Patent Number:	6571157
Patent Number:	6581565
Patent Number:	6581574
Patent Number:	6588260
Patent Number:	6598581
Patent Number:	6607302
Patent Number:	6609497
Patent Number:	6612287
Patent Number:	6619106
Patent Number:	6644115
Patent Number:	6736122
Patent Number:	6741441
Patent Number:	6752741

Property Type	Number
Patent Number:	6757149
Patent Number:	6758885
Patent Number:	6763804
Patent Number:	6766788
Patent Number:	6817592
Patent Number:	6847882
Patent Number:	6856209
Patent Number:	6874362
Patent Number:	6976477
Patent Number:	6988031
Patent Number:	7089894
Patent Number:	7116081
Patent Number:	7124963
Patent Number:	7137577
Patent Number:	7143501
Patent Number:	7168637
Patent Number:	7191755
Patent Number:	7198207
Patent Number:	7293554
Patent Number:	7487761
Patent Number:	7712451
Patent Number:	7982358

CORRESPONDENCE DATA

Fax Number: (302)449-9010

Correspondence will be sent to the e-mail address first; if that is unsuccessful, it will be sent using a fax number, if provided; if that is unsuccessful, it will be sent via US Mail.

Phone: 3024499010
Email: mmcclain@devlinlawfirm.com
Correspondent Name: TIMOTHY DEVLIN
Address Line 1: 1306 N. BROOM STREET
Address Line 2: 1ST FLOOR
Address Line 4: WILMINGTON, DELAWARE 19806

NAME OF SUBMITTER:	TIMOTHY DEVLIN
SIGNATURE:	/TIMOTHY DEVLIN/
DATE SIGNED:	08/31/2017
	This document serves as an Oath/Declaration (37 CFR 1.63).

Total Attachments: 2
source=michmotorassn#page1.tif

source=michmotorassn#page2.tif

EXHIBIT B

U.S. PATENT ASSIGNMENT

WHEREAS, Mobile Automotive Technologies, LLC, an Alabama limited liability company ("Assignor"), is the owner of (i) United States Patent and Patent Applications listed in Schedule A and the following (ii) through (iv) to the extent Assignor owns, controls or has the right to license or enforce them at any time: (ii) any patents or patent applications that claim priority directly or indirectly from any of the foregoing patent(s) in subsection (i), or from which priority is directly or indirectly claimed by any such patent(s) in subsection (i), or that have common priority with any such patent(s) in subsection (i); (iii) any foreign counterparts, foreign related patents, continuations, divisionals, continuations-in-part, extensions, substitutions, reissues, renewals and all results of oppositions, reexaminations, supplemental examinations, requests for continued examination and other review procedures of any of the foregoing in subsections (i) and (ii); and (iv) all patents issuing on patent applications covered by any of the foregoing subsections (i) through (iii) (together the "Assigned Patents").

WHEREAS, Michigan Motor Technologies LLC ("Assignee") is desirous of acquiring title in and to the Assigned Patents.

WHEREAS, Assignor is the owner of any and all right, title, and interest in and to the Assigned Patents.

WHEREAS, Assignor desires to sell, assign, and transfer all its right, title, and interest in the Assigned Patents to Assignee, and Assignee desires to obtain all such right, title, and interest in the Assigned Patents from Assignor.

NOW, THEREFORE, in consideration of good and valuable consideration, the receipt and adequacy of which is hereby acknowledged, Assignor hereby sells, assigns, transfers and conveys unto Assignee, its permitted successors and assigns, all of Assignor's right, title, and interest in and to the Assigned Patents, together with all claims, demands, or causes of action that Assignor has or might have by reason of any infringement of the Assigned Patents prior to the effective date of this assignment, including the right to sue and collect damages for all past, present and future infringement and all lost profits resulting therefrom.

IN WITNESS WHEREOF, this Agreement has been executed by duly authorized representatives of the Parties on the dates below.

Signature

Name John Mobile Automotive Technology LLC

Date: 8/25/17

Signature

Name KEVIN C BRADY MICHIGAN MOTOR TECHNOLOGY LLC

Date: 8/28/17

SCHEDULE A

Patents:

US6345604
US6347680
US6379281
US6443128
US6510839
US6557540
US6561166
US6571157
US6581565
US6581574
US6588260
US6598581
US6607302
US6609497
US6612287
US6619106
US6644115
US6736122
US6741441
US6752741
US6757149
US6758885
US6763804
US6766788
US6817592
US6847882
US6856209
US6874362
US6976477
US6988031
US7089894
US7116081
US7124963
US7137577
US7143501
US7168637
US7191755
US7198207
US7293554
US7487761
US7712451
US7982358
DE103 44 494.7-34
GB2385013
GB2422688
JP4235485
DE103 22 529.3

PETITIONER'S EXHIBIT 1002
US PATENT NO. 6,561,166

504584165 10/06/2017

PATENT ASSIGNMENT COVER SHEET

Electronic Version v1.1
Stylesheet Version v1.2

EPAS ID: PAT4630877

SUBMISSION TYPE:	RESUBMISSION
NATURE OF CONVEYANCE:	ASSIGNMENT
RESUBMIT DOCUMENT ID:	504528590

CONVEYING PARTY DATA

Name	Execution Date
GODO KAISHA IP BRIDGE	11/02/2016

RECEIVING PARTY DATA

Name:	MOBILE AUTOMOTIVE TECHNOLOGIES, LLC
Street Address:	951 GOVERNMENT STREET, SUITE B
City:	MOBILE
State/Country:	ALABAMA
Postal Code:	36604

PROPERTY NUMBERS Total: 42

Property Type	Number
Patent Number:	6345604
Patent Number:	6347680
Patent Number:	6379281
Patent Number:	6443128
Patent Number:	6510839
Patent Number:	6557540
Patent Number:	6561166
Patent Number:	6571157
Patent Number:	6581565
Patent Number:	6581574
Patent Number:	6588260
Patent Number:	6598581
Patent Number:	6607302
Patent Number:	6609497
Patent Number:	6612287
Patent Number:	6619106
Patent Number:	6644115
Patent Number:	6736122
Patent Number:	6741441

Property Type	Number
Patent Number:	6752741
Patent Number:	6757149
Patent Number:	6758885
Patent Number:	6763804
Patent Number:	6766788
Patent Number:	6817592
Patent Number:	6847882
Patent Number:	6856209
Patent Number:	6874362
Patent Number:	6976477
Patent Number:	6988031
Patent Number:	7089894
Patent Number:	7116081
Patent Number:	7124963
Patent Number:	7137577
Patent Number:	7143501
Patent Number:	7168637
Patent Number:	7191755
Patent Number:	7198207
Patent Number:	7293554
Patent Number:	7487761
Patent Number:	7712451
Patent Number:	7982358

CORRESPONDENCE DATA

Fax Number: (302)449-9010

Correspondence will be sent to the e-mail address first; if that is unsuccessful, it will be sent using a fax number, if provided; if that is unsuccessful, it will be sent via US Mail.

Phone: 3024499010
Email: mmcclain@devlinlawfirm.com
Correspondent Name: TIMOTHY DEVLIN
Address Line 1: 1306 N. BROOM STREET
Address Line 2: 1ST FLOOR
Address Line 4: WILMINGTON, DELAWARE 19806

NAME OF SUBMITTER:	TIMOTHY DEVLIN
SIGNATURE:	/Timothy Devlin/
DATE SIGNED:	10/06/2017
	This document serves as an Oath/Declaration (37 CFR 1.63).

Total Attachments: 6

source=Full page photo 1#page1.tif
source=Full page photo 2#page1.tif
source=Full page photo 3#page1.tif
source=MobileAutoSignedPAA#page1.tif
source=MobileAutoSignedPAA#page2.tif
source=MobileAutoSignedPAA#page3.tif

AMENDMENT NO. 1 TO THE PATENT ASSIGNMENT AGREEMENT

This Amendment No. 1 (the "**Amendment**"), dated as of the latest execution date below, is entered into by Mobile Automotive Technologies, LLC, an Alabama limited liability company and Godo Kaisha IP Bridge 1, with its principal offices at c/o Sakura Sogo Jimusho, 1-11 Kanda Jimbocho, Chiyoda-ku, Tokyo 102-0083, Japan, and amends the Patent Assignment Agreement entered into by the parties, executed on September 2, 2016 (the "**PTA**"). Capitalized terms not defined herein are defined in the PTA.

The parties agree to retroactively amend the PTA as follows:

1. Exhibit A to the PTA is hereby retroactively amended and restated in its entirety in the form of Exhibit A attached hereto.

2. The parties intend and agree that this Amendment shall be effective as of the Effective Date of the PTA with the same force and effect as if executed on that date. Except as expressly amended by this Amendment, all other terms, conditions and provisions of the PTA shall apply.

IN WITNESS WHEREOF, the parties have executed this Amendment through their duly authorized representatives.

Mobile Automotive Technologies, LLC

By: _____

Name: Kevin C. Brady

Title: Managing Member

Date: 10-21-2016

Godo Kaisha IP Bridge 1

By: _____

Name: Hideyuki Ogata

Title: Executive Manager

Date: 11-2-2016

PETITIONER'S EXHIBIT 1002
US PATENT NO. 6,561,166

EXHIBIT A

Patents:

1 US6345604
2 US6347680
3 US6379281
4 US6443128
5 US6510839
6 US6557540
7 US6561166
8 US6571157
9 US6581565
10 US6581574
11 US6588260
12 US6598581
13 US6607302
14 US6609497
15 US6612287
16 US6619106
17 US6644115
18 US6736122
19 US6741441
20 US6752741
21 US6757149
22 US6758885
23 US6763804
24 US6766788
25 US6817592
26 US6847882
27 US6856209
28 US6874362
29 US6976477
30 US6988031
31 US7089894
32 US7116081
33 US7124963
34 US7137577
35 US7143501
36 US7168637

PETITIONER'S EXHIBIT 1002
US PATENT NO. 6,561,166

37 US7191755
38 US7198207
39 US7293554
40 US7487761
41 US7712451
42 US7982358
43 DE103 44 494.7-34
44 GB2385013
45 GB2422688
46 JP4235485
47 DE103 22 529.3

PETITIONER'S EXHIBIT 1002
US PATENT NO. 6,561,166

EXHIBIT B

U.S. PATENT ASSIGNMENT

WHEREAS, Godo Kaisha IP Bridge 1 ("Assignor"), is the owner of (i) United States Patent and Patent Applications listed in Schedule A and the following (ii) through (iv) to the extent Assignor owns, controls or has the right to license or enforce them at any time: (ii) any patents or patent applications that claim priority directly or indirectly from any of the foregoing patent(s) in subsection (i), or from which priority is directly or indirectly claimed by any such patent(s) in subsection (i), or that have common priority with any such patent(s) in subsection (i); (iii) any foreign counterparts, foreign related patents, continuations, divisionals, continuations-in-part, extensions, substitutions, reissues, renewals and all results of oppositions, reexaminations, supplemental examinations, requests for continued examination and other review procedures of any of the foregoing in subsections (i) and (ii); and (iv) all patents issuing on patent applications covered by any of the foregoing subsections (i) through (iii) (together the "Assigned Patents").

WHEREAS, Mobile Automotive Technologies, LLC, an Alabama limited liability company ("Assignee") is desirous of acquiring title in and to the Assigned Patents.

WHEREAS, Assignor is the owner of any and all right, title, and interest in and to the Assigned Patents.

WHEREAS, Assignor desires to sell, assign, and transfer all its right, title, and interest in the Assigned Patents to Assignee, and Assignee desires to obtain all such right, title, and interest in the Assigned Patents from Assignor.

NOW, THEREFORE, in consideration of good and valuable consideration, the receipt and adequacy of which is hereby acknowledged, Assignor hereby sells, assigns, transfers and conveys unto Assignee, its permitted successors and assigns, all of Assignor's right, title, and interest in and to the Assigned Patents, together with all claims, demands, or causes of action that Assignor has or might have by reason of any infringement of the Assigned Patents prior to the effective date of this assignment, including the right to sue and collect damages for all past, present and future infringement and all lost profits resulting therefrom.

IN WITNESS WHEREOF, this Agreement has been executed by duly authorized representatives of the Parties on the dates below.

Signature

Hideyuki Ogata
Name

Date: Sept. 2, 2016

Signature

KEVIN C. BRADY
Name

Date: AUG 27, 2016

PETITIONER'S EXHIBIT 1002
US PATENT NO. 6,561,166

SCHEDULE A

Patents:

US6345604
US6347680
US6379281
US6443128
US6510839
US6557540
US6561166
US6571157
US6581565
US6581574
US6588260
US6598581
US6607302
US6609497
US6612287
US6619106
US6644115
US6736122
US6741441
US6752741
US6757149
US6758885
US6763804
US6766788
US6817592
US6847882
US6856209
US6874362
US6976477
US6988031
US7089894
US7116081
US7124963
US7137577
US7143501
US7168637
US7191755
US7198207

PETITIONER'S EXHIBIT 1002
US PATENT NO. 6,561,166

US7293554
US7487761
US7712451
US7982358

DE103 44 494.7-34
GB2385013
GB2422688
JP4235485

PETITIONER'S EXHIBIT 1002
US PATENT NO. 6,561,166

File History Content Report

The following content is missing from the original file history record obtained from the United States Patent and Trademark Office. No additional information is available.

Document Date - 2018-05-14

Document Title - USPTO Communication Re: Petition Requesting Trial

This page is not part of the official USPTO record. It has been determined that content identified on this document is missing from the original file history record.

Trials@uspto.gov
Tel: 571.272.7822

Paper 7
Entered: October 2, 2018

UNITED STATES PATENT AND TRADEMARK OFFICE

BEFORE THE PATENT TRIAL AND APPEAL BOARD

HYUNDAI MOTOR COMPANY,
Petitioner,

v.

MICHIGAN MOTOR TECHNOLOGIES LLC,
Patent Owner.

Case IPR2018-01061
Patent 6,557,540 B1[1]

Before NEIL T. POWELL, BARBARA A. PARVIS, MICHAEL L. WOODS, and SCOTT B. HOWARD, *Administrative Patent Judges*.[2]

PARVIS, *Administrative Patent Judge*.

---

[1] This Order addresses the same issue in the *inter partes* reviews listed in the Appendix. We exercise our discretion to issue one Order to be docketed in each case. The parties, however, are not authorized to use this style of filing in subsequent papers, without prior authorization.

[2] This is not an order from an expanded panel of the Board. Judges Parvis, Woods, and Howard are paneled on IPR2018-01061, -01064, -01073, -01075, and -01077. Judges Powell, Parvis, and Woods are paneled on IPR2018-01074 and -01078. Judges Powell, Woods, and Howard are paneled on IPR2018-01063, -01065, and -01072.

ORDER
Granting Joint Motions and Dismissing Proceedings
37 C.F.R. §§ 42.71(a), 42.72, 42.74

Hyundai Motor Company ("Petitioner") filed Petitions to institute *inter partes* reviews of certain claims of each of the challenged patents listed in the Appendix. Pursuant to 35 U.S.C. § 317, Petitioner and Michigan Motor Technologies LLC ("Patent Owner") filed a joint motion to terminate in each of the instant proceedings. *See, e.g.*, IPR2018-01061, Paper 5.[3] Along with each joint motion, the parties filed a Settlement Agreement. *See, e.g.*, IPR2018-01061, Ex. 1035. The parties also filed in each case a joint request that the settlement agreement be treated as business confidential information pursuant to 35 U.S.C. § 317(b) and 37 C.F.R. § 42.74(c). *See, e.g.*, IPR2018-01061, Paper 6. We authorized the above filings on September 24, 2018.

The parties represent that they have settled their disputes with respect to each of the challenged patents and memorialized their settlement in the written agreement submitted in each case. *See, e.g.*, IPR2018-01061, Paper 5. The parties state that they have agreed to settle and dismiss their related, co-pending district court lawsuit and have filed a joint stipulation requesting dismissal, with prejudice. *Id.* On this record, no motion by any third party for joinder with these proceedings is pending.

The instant proceedings are still at a preliminary stage. The Board has not yet instituted any trial. Upon consideration of the facts before us, we determine that it is appropriate to dismiss the petitions and the proceedings

[3] We cite to IPR2018-01061 herein, except as noted. The paper numbers and exhibit numbers for the other proceedings are listed in the Appendix.

PETITIONER'S EXHIBIT 1002
US PATENT NO. 6,561,166

with respect to both parties. *See* 37 C.F.R. § 42.71(a). Therefore, the joint motions are granted. This paper does not constitute a final written decision pursuant to 35 U.S.C. § 318(a).

ORDER

For the foregoing reasons, it is:

ORDERED that the parties' joint request in each proceeding that the settlement agreement (IPR2018-01061, Ex. 1035; IPR2018-01063, Ex. 1015; IPR2018-01064, Ex. 1024; IPR2018-01065, Ex. 1036; IPR2018-01072, Ex. 1019; IPR2018-01073, Ex. 1021; IPR2018-01074, Ex. 1016; IPR2018-01075, Ex. 1021; IPR2018-01077, Ex. 1010; IPR2018-01078, Ex. 1026) be treated as business confidential information and be kept separate from the patent file is *granted*; and

FURTHER ORDERED that the joint motions in the IPR2018-01061, Paper 5; IPR2018-01063, Paper 5; IPR2015-01064, Paper 6; IPR2018-01065, Paper 5; IPR2018-01072, Paper 5; IPR2018-01073, Paper 5; IPR2018-01074, Paper 5; IPR2018-01075, Paper 5; IPR2018-01077, Paper 5; IPR2018-01078, Paper 5 proceedings are *granted* and each of the proceedings is *dismissed.*

PETITIONER'S EXHIBIT 1002
US PATENT NO. 6,561,166

IPR2018-01061
Patent 6,557,540 B1

PETITIONER:

Brian C. McCormack
Matt Dushek
BAKER & MCKENZIE LLP
brian.mccormack@bakermckenzie.com
matt.dushek@bakermckenzie.com

PATENT OWNER:

Timothy Devlin
DEVLIN LAW FIRM LLC
tdevlin@devlinlawfirm.com

PETITIONER'S EXHIBIT 1002
US PATENT NO. 6,561,166

APPENDIX

Inter Partes Review	U.S. Patent No.	Joint Motion	Joint Request	Agreement
IPR2018-01061	6,557,540 B1	Paper No. 5	Paper No. 6	Ex. 1035
IPR2018-01063	7,487,761 B1	Paper No. 5	Paper No. 6	Ex. 1015
IPR2018-01064	6,581,574 B1	Paper No. 6	Paper No. 7	Ex. 1024
IPR2018-01065	6,757,149 B2	Paper No. 5	Paper No. 6	Ex. 1036
IPR2018-01072	6,988,031 B2	Paper No. 5	Paper No. 6	Ex. 1019
IPR2018-01073	6,571,157 B1	Paper No. 5	Paper No. 6	Ex. 1021
IPR2018-01074	6,644,155 B2	Paper No. 5	Paper No. 6	Ex. 1016
IPR2018-01075	6,561,166 B2	Paper No. 5	Paper No. 6	Ex. 1021
IPR2018-01077	7,143,501 B2	Paper No. 5	Paper No. 6	Ex. 1010
IPR2018-01078	7,116,081 B2	Paper No. 5	Paper No. 6	Ex. 1026

PETITIONER'S EXHIBIT 1002
US PATENT NO. 6,561,166

AO 120 (Rev. 08/10)

TO:	**Mail Stop 8** **Director of the U.S. Patent and Trademark Office** **P.O. Box 1450** **Alexandria, VA 22313-1450**	**REPORT ON THE FILING OR DETERMINATION OF AN ACTION REGARDING A PATENT OR TRADEMARK**

In Compliance with 35 U.S.C. § 290 and/or 15 U.S.C. § 1116 you are hereby advised that a court action has been filed in the U.S. District Court Eastern District of Michigan on the following

☐ Trademarks or ☑ Patents. (☐ the patent action involves 35 U.S.C. § 292.):

DOCKET NO.	DATE FILED	U.S. DISTRICT COURT
	2/15/2019	Eastern District of Michigan

PLAINTIFF	DEFENDANT
MICHIGAN MOTOR TECHNOLOGIES LLC	VOLKSWAGEN AKTIENGESELLSCHAFT

	PATENT OR TRADEMARK NO.	DATE OF PATENT OR TRADEMARK	HOLDER OF PATENT OR TRADEMARK
1	US 6,588,260 B1	7/8/2003	MICHIGAN MOTOR TECHNOLOGIES LLC
2	US 6,443,128 B1	9/3/2002	MICHIGAN MOTOR TECHNOLOGIES LLC
3	US 6,581,565 B2	6/24/2003	MICHIGAN MOTOR TECHNOLOGIES LLC
4	US 6,379,281 B1	4/30/2002	MICHIGAN MOTOR TECHNOLOGIES LLC
5	US 6,763,804 B2	7/20/2004	MICHIGAN MOTOR TECHNOLOGIES LLC

In the above—entitled case, the following patent(s)/ trademark(s) have been included:

DATE INCLUDED	INCLUDED BY ☐ Amendment ☐ Answer ☐ Cross Bill ☐ Other Pleading	
PATENT OR TRADEMARK NO.	DATE OF PATENT OR TRADEMARK	HOLDER OF PATENT OR TRADEMARK
1		
2		
3		
4		
5		

In the above—entitled case, the following decision has been rendered or judgement issued:

DECISION/JUDGEMENT

CLERK	(BY) DEPUTY CLERK	DATE

Copy 1—Upon initiation of action, mail this copy to Director **Copy 3—Upon termination of action, mail this copy to Director**
Copy 2—Upon filing document adding patent(s), mail this copy to Director **Copy 4—Case file copy**

REPORT ON THE FILING OR DETERMINATION OF AN ACTION REGARDING A PATENT OR TRADEMARK (CON'D)

PATENT OR TRADEMARK NO.	DATE OF PATENT OR TRADEMARK	HOLDER OF PATENT OR TRADEMARK
6. US 6,347,680 B1	2/19/2002	MICHIGAN MOTOR TECHNOLOGIES LLC
7. US 6,561,166 B2	5/13/2003	MICHIGAN MOTOR TECHNOLOGIES LLC
8. US 6,988,031 B2	1/17/2006	MICHIGAN MOTOR TECHNOLOGIES LLC
9. US 6,612,287 B2	9/2/2003	MICHIGAN MOTOR TECHNOLOGIES LLC
10. US 7,487,761 B1	2/10/2009	MICHIGAN MOTOR TECHNOLOGIES LLC
11. US 6,644,115 B2	11/11/2003	MICHIGAN MOTOR TECHNOLOGIES LLC
12. US 6,581,574 B1	6/24/2003	MICHIGAN MOTOR TECHNOLOGIES LLC
13. US 6,609,497 B2	8/26/2003	MICHIGAN MOTOR TECHNOLOGIES LLC
14. US 6,571,157 B1	5/27/2003	MICHIGAN MOTOR TECHNOLOGIES LLC
15. US 6,736,122 B2	5/18/2004	MICHIGAN MOTOR TECHNOLOGIES LLC
16. US 6,757,149 B2	6/29/2004	MICHIGAN MOTOR TECHNOLOGIES LLC
17. US 7,116,081 B2	10/3/2006	MICHIGAN MOTOR TECHNOLOGIES LLC
18. US 8,909,482 B2	12/9/2014	MICHIGAN MOTOR TECHNOLOGIES LLC
19. US 6,557,540 B1	5/6/2003	MICHIGAN MOTOR TECHNOLOGIES LLC
20. US 6,345,604	2/12/2002	MICHIGAN MOTOR TECHNOLOGIES LLC

File History Content Report

The following content is missing from the original file history record obtained from the United States Patent and Trademark Office. No additional information is available.

Document Date - 2020-02-14

Document Title - USPTO Communication Re: Petition Requesting Trial

This page is not part of the official USPTO record. It has been determined that content identified on this document is missing from the original file history record.

Electronic Acknowledgement Receipt	
EFS ID:	38910639
Application Number:	09861983
International Application Number:	
Confirmation Number:	6796
Title of Invention:	PURGE FUEL CANISTER MEASUREMENT METHOD AND SYSTEM
First Named Inventor/Applicant Name:	Ian Halleron
Correspondence Address:	Steven L. Oberholtzer BRINKS HOFER GILSON & LIONE P.O. Box 10395 - Chicago IL 60610 US 7349946285 -
Filer:	Timothy Devlin/Pat Mathews
Filer Authorized By:	Timothy Devlin
Attorney Docket Number:	10541/388-1
Receipt Date:	19-MAR-2020
Filing Date:	16-MAY-2001
Time Stamp:	11:48:44
Application Type:	Utility under 35 USC 111(a)

Payment information:

Submitted with Payment	no

File Listing:

Document Number	Document Description	File Name	File Size(Bytes)/ Message Digest	Multi Part /.zip	Pages (if appl.)
1		2020-03-19-USPN6561166-MMT-Trans-POA-as-filed.pdf	290202 50bc54e883238c231f1c4010bb9eaf7d50b4df2e	yes	2
	Multipart Description/PDF files in .zip description				
	Document Description		**Start**	**End**	
	Transmittal Letter		1	1	
	Power of Attorney		2	2	
Warnings:					
Information:					
2	Assignee showing of ownership per 37 CFR 3.73	2020-03-19-USPN6561166-MMT-373c-Stmt-as-filed.pdf	124046 4f522647efc993083ab9540cbaa1a2af6013d8bb	no	3
Warnings:					
Information:					
		Total Files Size (in bytes):	414248		

This Acknowledgement Receipt evidences receipt on the noted date by the USPTO of the indicated documents, characterized by the applicant, and including page counts, where applicable. It serves as evidence of receipt similar to a Post Card, as described in MPEP 503.

New Applications Under 35 U.S.C. 111

If a new application is being filed and the application includes the necessary components for a filing date (see 37 CFR 1.53(b)-(d) and MPEP 506), a Filing Receipt (37 CFR 1.54) will be issued in due course and the date shown on this Acknowledgement Receipt will establish the filing date of the application.

National Stage of an International Application under 35 U.S.C. 371

If a timely submission to enter the national stage of an international application is compliant with the conditions of 35 U.S.C. 371 and other applicable requirements a Form PCT/DO/EO/903 indicating acceptance of the application as a national stage submission under 35 U.S.C. 371 will be issued in addition to the Filing Receipt, in due course.

New International Application Filed with the USPTO as a Receiving Office

If a new international application is being filed and the international application includes the necessary components for an international filing date (see PCT Article 11 and MPEP 1810), a Notification of the International Application Number and of the International Filing Date (Form PCT/RO/105) will be issued in due course, subject to prescriptions concerning national security, and the date shown on this Acknowledgement Receipt will establish the international filing date of the application.

Doc Code: PA..
Document Description: Power of Attorney

PTO/AIA/82A (07-13)
Approved for use through 01/31/2018. OMB 0651-0035
U.S. Patent and Trademark Office; U.S. DEPARTMENT OF COMMERCE
Under the Paperwork Reduction Act of 1995, no persons are required to respond to a collection of information unless it displays a valid OMB control number.

TRANSMITTAL FOR POWER OF ATTORNEY TO ONE OR MORE REGISTERED PRACTITIONERS

NOTE: This form is to be submitted with the Power of Attorney by Applicant form (PTO/AIA/82B) to identify the application to which the Power of Attorney is directed, in accordance with 37 CFR 1.5, unless the application number and filing date are identified in the Power of Attorney by Applicant form. If neither form PTO/AIA/82A nor form PTO/AIA82B identifies the application to which the Power of Attorney is directed, the Power of Attorney will not be recognized in the application.

Application Number	09/861,983
Filing Date	May 16, 2001
First Named Inventor	Ian Halleron
Title	PURGE FUEL CANISTER MEASUREMENT METHOD AND SYSTEM
Art Unit	4747
Examiner Name	Hai H. Hyunh
Attorney Docket Number	

SIGNATURE of Applicant or Patent Practitioner

Signature	/Timothy Devlin/	Date (Optional)	
Name	Timothy Devlin	Registration Number	41706
Title (if Applicant is a juristic entity)	Attorney for Applicant		
Applicant Name (if Applicant is a juristic entity)	Michigan Motor Technologies LLC		

NOTE: This form must be signed in accordance with 37 CFR 1.33. See 37 CFR 1.4(d) for signature requirements and certifications. If more than one applicant, use multiple forms.

☑ *Total of 1 forms are submitted.

This collection of information is required by 37 CFR 1.131, 1.32, and 1.33. The information is required to obtain or retain a benefit by the public which is to file (and by the USPTO to process) an application. Confidentiality is governed by 35 U.S.C. 122 and 37 CFR 1.11 and 1.14. This collection is estimated to take 3 minutes to complete, including gathering, preparing, and submitting the completed application form to the USPTO. Time will vary depending upon the individual case. Any comments on the amount of time you require to complete this form and/or suggestions for reducing this burden, should be sent to the Chief Information Officer, U.S. Patent and Trademark Office, U.S. Department of Commerce, P.O. Box 1450, Alexandria, VA 22313-1450. DO NOT SEND FEES OR COMPLETED FORMS TO THIS ADDRESS. **SEND TO: Commissioner for Patents, P.O. Box 1450, Alexandria, VA 22313-1450.**

If you need assistance in completing the form, call 1-800-PTO-9199 and select option 2.

PTO/AIA/80 (07-17)
Approved for use through 01/31/2018. OMB 0651-0035
U.S. Patent and Trademark Office; U.S. DEPARTMENT OF COMMERCE
Under the Paperwork Reduction Act of 1995, no person is required to respond to a collection of information unless it displays a valid OMB control number

POWER OF ATTORNEY TO PROSECUTE APPLICATIONS BEFORE THE USPTO

I hereby revoke all previous powers of attorney given in the application identified in the attached statement under 37 CFR 3.73(c).

I hereby appoint:

☑ Practitioners associated with Customer Number: 163393

OR

☐ Practitioner(s) named below (if more than ten patent practitioners are to be named, then a customer number must be used):

Name	Registration Number	Name	Registration Number

As attorney(s) or agent(s) to represent the undersigned before the United States Patent and Trademark Office (USPTO) in connection with any and all patent applications assigned only to the undersigned according to the USPTO assignment records or assignment documents attached to this form in accordance with 37 CFR 3.73(c).

Please change the correspondence address for the application identified in the attached statement under 37 CFR 3.73(c) to:

☑ The address associated with Customer Number: 163393

OR

☐

Firm or individual name		
Address		
City	State	Zip
Country		
Telephone	Email	

Assignee name and address: MICHIGAN MOTOR TECHNOLOGIES LLC
2360 ORCHARD LAKE ROAD, SUITE 100
SYLVAN LAKE, MICHIGAN 48320

A copy of this form, together with a statement under 37 CFR 3.73(c) (Form PTO/AIA/96 or equivalent) is required to be filed in each application in which this form is used. The statement under 37 CFR 3.73(c) may be completed by one of the practitioners appointed in this form, and must identify the application in which this Power of Attorney is to be filed.

SIGNATURE of Assignee of Record

The individual whose signature and title is supplied below is authorized to act on behalf of the assignee.

Signature KCBrady	Date 8/5/2019
Name Kevin Brady	Telephone 215 298 3164
Title Managing Member	

This collection of information is required by 37 CFR 1.31, 1.32, and 1.33. The information is required to obtain or retain a benefit by the public, which is to update (and by the USPTO to process) the file of a patent or reexamination proceeding. Confidentiality is governed by 35 U.S.C. 122 and 37 CFR 1.11 and 1.14. This collection is estimated to take 18 minutes to complete, including gathering, preparing, and submitting the completed application form to the USPTO. Time will vary depending upon the individual case. Any comments on the amount of time you require to complete this form and/or suggestions for reducing this burden, should be sent to the Chief Information Officer, U.S. Patent and Trademark Office, U.S. Department of Commerce, P.O. Box 1450, Alexandria, VA 22313-1450. DO NOT SEND FEES OR COMPLETED FORMS TO THIS ADDRESS. **SEND TO: Commissioner for Patents, P.O. Box 1450, Alexandria, VA 22313-1450.**

If you need assistance in completing the form, call 1-800-PTO-9199 and select option 2.

PTO/AIA/96 (08-12)
Approved for use through 01/31/2013. OMB 0651-0031
U.S. Patent and Trademark Office; U.S. DEPARTMENT OF COMMERCE
Under the Paperwork Reduction Act of 1995, no persons are required to respond to a collection of information unless it displays a valid OMB control number.

STATEMENT UNDER 37 CFR 3.73(c)

Applicant/Patent Owner: Michigan Motor Technologies LLC

Application No./Patent No.: Patent No.: 6,561,166 Filed/Issue Date: Issued: May 13, 2003

Titled: PURGE FUEL CANISTER MEASUREMENT METHOD AND SYSTEM

Michigan Motor Technologies LLC, a limited liability company

(Name of Assignee) (Type of Assignee, e.g., corporation, partnership, university, government agency, etc.)

states that, for the patent application/patent identified above, it is (choose **one** of options 1, 2, 3 or 4 below):

1. ☑ The assignee of the entire right, title, and interest.

2. ☐ An assignee of less than the entire right, title, and interest (check applicable box):

   ☐ The extent (by percentage) of its ownership interest is _____%. Additional Statement(s) by the owners holding the balance of the interest must be submitted to account for 100% of the ownership interest.

   ☐ There are unspecified percentages of ownership. The other parties, including inventors, who together own the entire right, title and interest are:

   Additional Statement(s) by the owner(s) holding the balance of the interest must be submitted to account for the entire right, title, and interest.

3. ☐ The assignee of an undivided interest in the entirety (a complete assignment from one of the joint inventors was made). The other parties, including inventors, who together own the entire right, title, and interest are:

   Additional Statement(s) by the owner(s) holding the balance of the interest must be submitted to account for the entire right, title, and interest.

4. ☐ The recipient, via a court proceeding or the like (*e.g.*, bankruptcy, probate), of an undivided interest in the entirety (a complete transfer of ownership interest was made). The certified document(s) showing the transfer is attached.

The interest identified in option 1, 2 or 3 above (not option 4) is evidenced by either (choose **one** of options A or B below):

A. ☐ An assignment from the inventor(s) of the patent application/patent identified above. The assignment was recorded in the United States Patent and Trademark Office at Reel _____, Frame _____, or for which a copy thereof is attached.

B. ☑ A chain of title from the inventor(s), of the patent application/patent identified above, to the current assignee as follows:

1. From: Ian Halleron, Jon Dixon To: Visteon Global Technologies, Inc.

   The document was recorded in the United States Patent and Trademark Office at

   Reel 011838, Frame 0682, or for which a copy thereof is attached.

2. From: Visteon Global Technologies, Inc. To: Godo Kaisha IP Bridge 1

   The document was recorded in the United States Patent and Trademark Office at

   Reel 035421, Frame 0739, or for which a copy thereof is attached.

This collection of information is required by 37 CFR 3.73(b). The information is required to obtain or retain a benefit by the public which is to file (and by the USPTO to process) an application. Confidentiality is governed by 35 U.S.C. 122 and 37 CFR 1.11 and 1.14. This collection is estimated to take 12 minutes to complete, including gathering, preparing, and submitting the completed application form to the USPTO. Time will vary depending upon the individual case. Any comments on the amount of time you require to complete this form and/or suggestions for reducing this burden, should be sent to the Chief Information Officer, U.S. Patent and Trademark Office, U.S. Department of Commerce, P.O. Box 1450, Alexandria, VA 22313-1450. DO NOT SEND FEES OR COMPLETED FORMS TO THIS ADDRESS. **SEND TO: Commissioner for Patents, P.O. Box 1450, Alexandria, VA 22313-1450**.

If you need assistance in completing the form, call 1-800-PTO-9199 and select option 2.

PTO/AIA/96 (08-12)
Approved for use through 01/31/2013. OMB 0651-0031
U.S. Patent and Trademark Office; U.S. DEPARTMENT OF COMMERCE
Under the Paperwork Reduction Act of 1995, no persons are required to respond to a collection of information unless it displays a valid OMB control number.

STATEMENT UNDER 37 CFR 3.73(c)

3. From: Godo Kaisha IP Bridge 1 To: Mobile Automotive Technologies, LLC

The document was recorded in the United States Patent and Trademark Office at
Reel 043463, Frame 0223, or for which a copy thereof is attached.

4. From: Godo Kaisha IP Bridge 1 To: Mobile Automotive Technologies, LLC

The document was recorded in the United States Patent and Trademark Office at
Reel 043843, Frame 0821, or for which a copy thereof is attached.

5. From: Mobile Automotive Technologies, LLC To: Michigan Motor Technologies LLC

The document was recorded in the United States Patent and Trademark Office at
Reel 043463, Frame 0881, or for which a copy thereof is attached.

6. From: _____ To: _____

The document was recorded in the United States Patent and Trademark Office at
Reel _____, Frame _____, or for which a copy thereof is attached.

☐ Additional documents in the chain of title are listed on a supplemental sheet(s).

☑ As required by 37 CFR 3.73(c)(1)(i), the documentary evidence of the chain of title from the original owner to the assignee was, or concurrently is being, submitted for recordation pursuant to 37 CFR 3.11.

[NOTE: A separate copy (i.e., a true copy of the original assignment document(s)) must be submitted to Assignment Division in accordance with 37 CFR Part 3, to record the assignment in the records of the USPTO. See MPEP 302.08]

The undersigned (whose title is supplied below) is authorized to act on behalf of the assignee.

/Timothy Devlin/	March 19, 2020
Signature	Date
Timothy Devlin	Reg. No. 41706
Printed or Typed Name	Title or Registration Number

Privacy Act Statement

The **Privacy Act of 1974 (P.L. 93-579)** requires that you be given certain information in connection with your submission of the attached form related to a patent application or patent. Accordingly, pursuant to the requirements of the Act, please be advised that: (1) the general authority for the collection of this information is 35 U.S.C. 2(b)(2); (2) furnishing of the information solicited is voluntary; and (3) the principal purpose for which the information is used by the U.S. Patent and Trademark Office is to process and/or examine your submission related to a patent application or patent. If you do not furnish the requested information, the U.S. Patent and Trademark Office may not be able to process and/or examine your submission, which may result in termination of proceedings or abandonment of the application or expiration of the patent.

The information provided by you in this form will be subject to the following routine uses:

1. The information on this form will be treated confidentially to the extent allowed under the Freedom of Information Act (5 U.S.C. 552) and the Privacy Act (5 U.S.C 552a). Records from this system of records may be disclosed to the Department of Justice to determine whether disclosure of these records is required by the Freedom of Information Act.
2. A record from this system of records may be disclosed, as a routine use, in the course of presenting evidence to a court, magistrate, or administrative tribunal, including disclosures to opposing counsel in the course of settlement negotiations.
3. A record in this system of records may be disclosed, as a routine use, to a Member of Congress submitting a request involving an individual, to whom the record pertains, when the individual has requested assistance from the Member with respect to the subject matter of the record.
4. A record in this system of records may be disclosed, as a routine use, to a contractor of the Agency having need for the information in order to perform a contract. Recipients of information shall be required to comply with the requirements of the Privacy Act of 1974, as amended, pursuant to 5 U.S.C. 552a(m).
5. A record related to an International Application filed under the Patent Cooperation Treaty in this system of records may be disclosed, as a routine use, to the International Bureau of the World Intellectual Property Organization, pursuant to the Patent Cooperation Treaty.
6. A record in this system of records may be disclosed, as a routine use, to another federal agency for purposes of National Security review (35 U.S.C. 181) and for review pursuant to the Atomic Energy Act (42 U.S.C. 218(c)).
7. A record from this system of records may be disclosed, as a routine use, to the Administrator, General Services, or his/her designee, during an inspection of records conducted by GSA as part of that agency's responsibility to recommend improvements in records management practices and programs, under authority of 44 U.S.C. 2904 and 2906. Such disclosure shall be made in accordance with the GSA regulations governing inspection of records for this purpose, and any other relevant (*i.e.*, GSA or Commerce) directive. Such disclosure shall not be used to make determinations about individuals.
8. A record from this system of records may be disclosed, as a routine use, to the public after either publication of the application pursuant to 35 U.S.C. 122(b) or issuance of a patent pursuant to 35 U.S.C. 151. Further, a record may be disclosed, subject to the limitations of 37 CFR 1.14, as a routine use, to the public if the record was filed in an application which became abandoned or in which the proceedings were terminated and which application is referenced by either a published application, an application open to public inspection or an issued patent.
9. A record from this system of records may be disclosed, as a routine use, to a Federal, State, or local law enforcement agency, if the USPTO becomes aware of a violation or potential violation of law or regulation.

File History Content Report

The following content is missing from the original file history record obtained from the United States Patent and Trademark Office. No additional information is available.

Document Date - 2020-03-24

Document Title - USPTO Communication Re: Change of Address

This page is not part of the official USPTO record. It has been determined that content identified on this document is missing from the original file history record.

UNITED STATES PATENT AND TRADEMARK OFFICE

UNITED STATES DEPARTMENT OF COMMERCE
United States Patent and Trademark Office
Address: COMMISSIONER FOR PATENTS
P.O. Box 1450
Alexandria, Virginia 22313-1450
www.uspto.gov

APPLICATION NUMBER	FILING OR 371(C) DATE	FIRST NAMED APPLICANT	ATTY. DOCKET NO./TITLE
09/861,983	05/16/2001	Ian Halleron	

CONFIRMATION NO. 6796

163393
Michigan Motor Tech
c/o Devlin Law Firm LLC
1526 Gilpin Ave.
Wilmington, DE 19806

POA ACCEPTANCE LETTER

OC000000115663510

Date Mailed: 03/31/2020

NOTICE OF ACCEPTANCE OF POWER OF ATTORNEY

This is in response to the Power of Attorney filed 03/19/2020.

The Power of Attorney in this application is accepted. Correspondence in this application will be mailed to the above address as provided by 37 CFR 1.33.

Questions about the contents of this notice and the requirements it sets forth should be directed to the Office of Data Management, Application Assistance Unit, at **(571) 272-4000** or **(571) 272-4200** or **1-888-786-0101**.

/trwoodson/

PETITIONER'S EXHIBIT 1002
US PATENT NO. 6,561,166

UNITED STATES PATENT AND TRADEMARK OFFICE

UNITED STATES DEPARTMENT OF COMMERCE
United States Patent and Trademark Office
Address: COMMISSIONER FOR PATENTS
P.O. Box 1450
Alexandria, Virginia 22313-1450
www.uspto.gov

APPLICATION NUMBER	FILING OR 371(C) DATE	FIRST NAMED APPLICANT	ATTY. DOCKET NO./TITLE
09/861,983	05/16/2001	Ian Halleron	10541/388-1

CONFIRMATION NO. 6796

POWER OF ATTORNEY NOTICE

Steven L. Oberholtzer
BRINKS HOFER GILSON & LIONE
P.O. Box 10395
Chicago, IL 60610

OC000000115663344

Date Mailed: 03/31/2020

NOTICE REGARDING CHANGE OF POWER OF ATTORNEY

This is in response to the Power of Attorney filed 03/19/2020.

- The Power of Attorney to you in this application has been revoked by the assignee who has intervened as provided by 37 CFR 3.71. Future correspondence will be mailed to the new address of record(37 CFR 1.33).

Questions about the contents of this notice and the requirements it sets forth should be directed to the Office of Data Management, Application Assistance Unit, at **(571) 272-4000** or **(571) 272-4200** or **1-888-786-0101**.

/trwoodson/

PETITIONER'S EXHIBIT 1002
US PATENT NO. 6,561,166

Trials@uspto.gov
571-272-7822

Paper 12
Date: September 9, 2020

UNITED STATES PATENT AND TRADEMARK OFFICE

BEFORE THE PATENT TRIAL AND APPEAL BOARD

VOLKSWAGEN GROUP OF AMERICA, INC.,
Petitioner,

v.

MICHIGAN MOTOR TECHNOLOGIES LLC,
Patent Owner.

IPR2020-00452
Patent 6,561,166 B2

Before NEIL T. POWELL, SCOTT B. HOWARD, and SEAN P. O'HANLON, *Administrative Patent Judges*.

O'HANLON, *Administrative Patent Judge*.

DECISION
Granting Institution of *Inter Partes* Review
35 U.S.C. § 314

PETITIONER'S EXHIBIT 1002
US PATENT NO. 6,561,166

I. INTRODUCTION

A. Background

Volkswagen Group of America, Inc. ("Petitioner") filed a Petition for *inter partes* review of claims 1–5 ("the challenged claims") of U.S. Patent No. 6,561,166 B2 (Ex. 1001, "the '166 patent"). Paper 2 ("Pet."), 1. Michigan Motor Technologies LLC ("Patent Owner") filed a Preliminary Response. Paper 7 ("Prelim. Resp.").

Institution of an *inter partes* review is authorized by statute only when "the information presented in the petition . . . and any response . . . shows that there is a reasonable likelihood that the petitioner would prevail with respect to at least 1 of the claims challenged in the petition." 35 U.S.C. § 314(a) (2018). Further, a decision to institute may not institute on fewer than all claims challenged in the petition. *SAS Inst., Inc. v. Iancu*, 138 S. Ct. 1348, 1354, 1359–60 (2018). Moreover, if the PTAB institutes a trial, the PTAB will institute on all challenges raised in the petition. *See* Patent Trial and Appeal Board Consolidated Trial Practice Guide ("CTPG") 64 (Nov. 2019) ("The Board will not institute on fewer than all claims or all challenges in a petition.").[1]

We have authority, acting on the designation of the Director, to determine whether to institute an *inter partes* review under 35 U.S.C. § 314 and 37 C.F.R. § 42.4(a). For the reasons set forth below, upon considering the Petition, Preliminary Response, and evidence of record, we conclude that the information presented shows that there is a reasonable likelihood that Petitioner would prevail in establishing the unpatentability of at least one of

[1] *Available at* https://www.uspto.gov/TrialPracticeGuideConsolidated.

PETITIONER'S EXHIBIT 1002
US PATENT NO. 6,561,166

the challenged claims. Thus, we institute *inter partes* review of all challenged claims based on all asserted grounds.

B. Real Parties in Interest

Petitioner identifies itself and its parent company, Volkswagen Aktiengesellschaft, as the real parties in interest. Pet. 2.

Patent Owner identifies itself as the sole real party in interest. Paper 5, 2 (Patent Owner's Mandatory Notices).

C. Related Matters

The parties indicate that the '166 patent was the subject of the following district court proceeding:

> *Michigan Motor Technologies LLC v. Volkswagen Aktiengesellschaft*, No. 2:19-cv-10485 (E.D. Mich. filed Feb. 18, 2019).

Pet. 2; Paper 5, 2. Although this proceeding is still ongoing, the parties affirm that the '166 patent is no longer asserted in the litigation. Pet. 2; Paper 5, 2. We note that the '166 patent was also the subject of the following district court proceeding:

> *Michigan Motor Technologies LLC v. Hyundai Motor Company*, No. 2-17-cv-12901 (E.D. Mich. filed Sept. 1, 2017).

We further note that the '166 patent was also subject of the following *inter partes* review:

> *Hyundai Motor Company v. Michigan Motor Technologies LLC*, IPR2018-01075 (PTAB filed May 14, 2018).

This proceeding was terminated prior to the issuance of a decision on institution. *See* IPR2018-01075, Paper 7 (PTAB Oct. 2, 2018).

PETITIONER'S EXHIBIT 1002
US PATENT NO. 6,561,166

D. The Challenged Patent

The '166 patent discloses an engine controller for a direct injection spark ignited ("DISI") internal combustion engine, which injects fuel at a high pressure directly into the combustion chamber. Ex. 1001, 1:15–16, 1:21–22, 2:36–40. This type of engine is capable of operating in a stratified mode or a homogenous mode. *Id.* at 1:28–29. In the stratified mode, fuel is injected near the spark plug during the compression stroke such that the combustion chamber contains stratified layers with different air-fuel mixtures. *Id.* at 1:29–34, 1:39–41. In the homogeneous mode, fuel is injected during an intake stroke of the engine and forms a homogenous mixture of fuel and air in the combustion chamber. *Id.* at 1:34–38, 1:47–49.

Gasoline engines typically collect evaporated fuel vapors from the gasoline tank and deliver the vapors to the combustion chambers where the vapors are burned. Ex. 1001, 1:60–66. This, however, makes the air-fuel ratio in the combustion chamber unknown. *Id.* at 1:66–2:1. Thus, known engine control systems measure the air-fuel ratio of the vapors and control the ratio of the air-fuel mixture that is injected into the combustion chamber. *Id.* at 2:1–4. Traditionally, an oxygen sensor, such as a universal exhaust gas oxygen sensor, is used. *Id.* at 2:4–7. The '166 patent recognizes that, as gasoline engines become more efficient and operate with leaner air-fuel mixtures, these sensors become less accurate or stop working. *Id.* at 2:7–12. This is particularly true for a DISI engine operating in the stratified mode, which uses a much leaner mixture than the homogeneous mode. *Id.* at 2:12–14. Known engine control systems typically shut off the flow of evaporated fuel vapors in the stratified mode, which limits the time the engine can operate in the stratified mode and, therefore, limits the efficiency

PETITIONER'S EXHIBIT 1002
US PATENT NO. 6,561,166

of the engine. *Id.* at 2:14–22. Additionally, when evaporated fuel vapors are fed into the combustion chamber during stratified operation, the unknown air-fuel ratio of the vapors can result in large quantities of unburned fuel in the exhaust gas or an undesirable increase in produced engine torque. *Id.* at 2:23–32.

The '166 patent purports to improve upon known systems by indirectly measuring the fuel level in the evaporated fuel vapors using existing sensors. Ex. 1001, 2:47–50. DISI engine 100 includes, *inter alia*, carbon canister 118, catalytic converter 142, NOx trap/catalyst 144, and catalyst temperature sensor 146. *Id.* at 3:48–65, Fig. 1. In operation, a first temperature measurement is obtained from the catalyst temperature sensor to determine whether the NOx trap is operating within calibration limits. *Id.* at 4:51–53; *see also id.* at 4:13–16 (explaining that catalyst temperature sensor 146 "is located near the lean NOx trap/catalyst 144 and measures the temperature of the lean NOx trap/catalyst 144"). If so, the engine is switched to the stratified mode (if not already in this mode), and evaporated fuel vapors are allowed to flow from the carbon canister into the engine intake manifold. *Id.* at 4:64–5:5. A second temperature measurement is obtained from the catalyst temperature sensor while the vapors are being introduced into the combustion chamber. *Id.* at 5:6–9. If the second measured temperature is within an acceptable range, the engine can remain in the stratified mode, in which case the fuel level of the evaporated fuel vapors can be determined as a function of the temperature change between the first and second temperature measurements. *Id.* at 5:17–23. If the second measured temperature is too high, there is too much fuel in the vapors and the vapor flow rate is reduced until the NOx trap is at an

PETITIONER'S EXHIBIT 1002
US PATENT NO. 6,561,166

acceptable temperature. *Id.* at 5:24–31. If the second measured temperature is too low, the engine is switched to the homogenous mode, the fuel level of the vapors is measured using an exhaust gas oxygen sensor, and the vapor flow rate is adjusted accordingly. *Id.* at 5:36–63.

E. The Challenged Claims

Petitioner challenges claims 1–5 of the '166 patent. Pet. 1. Claim 1 is the sole independent claim and is reproduced below:

> 1. A method of controlling a direct injection spark ignited internal combustion engine that is capable of operating in a stratified mode where fuel is injected during a compression stroke of the engine and a homogeneous mode where fuels is injected during an intake stroke of the engine, the internal combustion engine having a catalytic converter and an NO_x trap, comprising:
>
> measuring a first temperature of an NO_x trap that is in contact with an exhaust gas exhausted from a combustion chamber while the engine is operating in the stratified mode;
>
> enabling evaporated fuel vapors to enter the combustion chamber at a flow rate while the engine is operating in the stratified mode;
>
> measuring a second temperature of the NO_x trap while the engine is operating in the stratified mode; and
>
> adjusting the flow rate of the evaporated fuel vapors as a function of the second temperature when the second temperature is within a lower temperature threshold and an upper temperature threshold.

Ex. 1001, 6:9–28.

PETITIONER'S EXHIBIT 1002
US PATENT NO. 6,561,166

F. Asserted Grounds of Unpatentability

The Petition relies on the following prior art references:

Name	Reference	Exhibit
Hepburn	US 5,910,096, issued June 8, 1999	1005
Price	US 5,806,304, issued Sept. 15, 1998	1006
Kainz	US 6,227,033 B1, issued May 8, 2001	1007
Kerns	US 6,192,672 B1, issued Feb. 27, 2001	1008

Petitioner asserts the following grounds of unpatentability:

Claim(s) Challenged	35 U.S.C. §	Reference(s)
1–4	103(a)[2]	Hepburn, Price
5	103(a)	Hepburn, Price, Kainz
1–5	102(e)	Kerns

Pet. 5. Petitioner submits a declaration of Glenn R. Bower, Ph.D. (Ex. 1003, "Bower Declaration") in support of its contentions. Patent Owner submits a declaration of Russell A. Leonard, Jr., Ph.D. (Ex. 2001) in support of its preliminary responses.

II. ANALYSIS

A. Principles of Law

Petitioner bears the burden of persuasion to prove unpatentability, by a preponderance of the evidence, of the claims challenged in the Petition.

[2] The application resulting in the '166 patent was filed prior to the date when the Leahy-Smith America Invents Act ("AIA"), Pub. L. No. 112–29, 125 Stat. 284 (2011), took effect. Thus, we refer to the pre-AIA version of sections 102 and 103.

35 U.S.C. § 316(e). This burden never shifts to Patent Owner. *Dynamic Drinkware, LLC v. Nat'l Graphics, Inc.*, 800 F.3d 1375, 1378 (Fed. Cir. 2015). The Board may authorize an *inter partes* review if we determine that the information presented in the Petition and Patent Owner's Preliminary Response shows that there is a reasonable likelihood that Petitioner will prevail with respect to at least one of the claims challenged in the petition. 35 U.S.C. § 314(a).

"Under 35 U.S.C. § 102 a claim is anticipated 'if each and every limitation is found either expressly or inherently in a single prior art reference.'" *King Pharm., Inc. v. Eon Labs, Inc.*, 616 F.3d 1267, 1274 (Fed. Cir. 2010) (quoting *Celeritas Techs. Ltd. v. Rockwell Int'l Corp.*, 150 F.3d 1354, 1360 (Fed. Cir. 1998)). "Anticipation requires the presence in a single prior art disclosure of all elements of a claimed invention arranged as in the claim." *Therasense, Inc. v. Becton, Dickinson & Co.*, 593 F.3d 1325, 1332 (Fed. Cir. 2010) (quoting *Connell v. Sears, Roebuck & Co.*, 722 F.2d 1542, 1548 (Fed. Cir. 1983)).

A patent claim is unpatentable under 35 U.S.C. § 103(a) if the differences between the claimed subject matter and the prior art are such that the subject matter, as a whole, would have been obvious at the time the invention was made to a person having ordinary skill in the art to which the subject matter pertains. *KSR Int'l Co. v. Teleflex Inc.*, 550 U.S. 398, 406 (2007). The question of obviousness is resolved on the basis of underlying factual determinations including: (1) the scope and content of the prior art; (2) any differences between the claimed subject matter and the prior art; (3) the level of skill in the art; and (4) any objective evidence of non-obviousness. *Graham v. John Deere Co.*, 383 U.S. 1, 17–18 (1966).

PETITIONER'S EXHIBIT 1002
US PATENT NO. 6,561,166

B. Level of Ordinary Skill in the Art

Petitioner contends that a person having ordinary skill in the art at the time of the invention ("POSA") "would have had a B.S. degree in Electrical Engineering or Mechanical Engineering (or equivalent), as well as at least 2-4 years of academic or industry experience in the relevant field of engine control and exhaust systems." Pet. 18 (citing Ex. 1003 ¶¶ 29–32).

Patent Owner contends that a person having ordinary skill in the art at the time of the invention "is a person with (1) a B.S. in mechanical engineering or a closely related field with three or more years' experience in either engine systems or engine control systems or (2) at least a M.S. in mechanical engineering." Prelim. Resp. 7–8 (citing Ex. 2001 ¶ 14).

The parties do not identify, and we do not discern, any material difference between the parties' proposed definitions. We note that both parties' definitions require a bachelor's degree in engineering, such as mechanical engineering, or the equivalent with either a few years of industry or academic (such as that required to obtain a master's degree in mechanical engineering) experience. For purposes of this decision and based on the record currently before us, we adopt Petitioner's proposed definition of the level of ordinary skill, which is includes engine exhaust systems. We note that the '166 patent and the prior art of record are generally directed to engine control systems having emission control devices. *See, e.g.*, Ex. 1001, 2:36–45; Ex. 1005, 1:7–9; Ex. 1008, 1:61–62; *see also In re GPAC Inc.*, 57 F.3d 1573, 1579 (Fed. Cir. 1995) (approving the determination of the level of ordinary skill in the art by appeal to the references of record). Also, we note that we would reach the same conclusions under either proposed standard.

PETITIONER'S EXHIBIT 1002
US PATENT NO. 6,561,166

C. Claim Construction

In an *inter partes* review, claims are construed using the same claim construction standard that would be used to construe the claims in a civil action under 35 U.S.C. § 282(b), including construing the claims in accordance with the ordinary and customary meaning of such claims as understood by one of ordinary skill in the art and the prosecution history pertaining to the patent. 37 C.F.R. § 42.100(b) (2019). Thus, we apply the claim construction standard as set forth in *Phillips v. AWH Corp.*, 415 F.3d 1303 (Fed. Cir. 2005) (en banc).

Claim terms are generally given their ordinary and customary meaning as would be understood by one with ordinary skill in the art in the context of the specification, the prosecution history, other claims, and even extrinsic evidence including expert and inventor testimony, dictionaries, and learned treatises, although extrinsic evidence is less significant than the intrinsic record. *Phillips*, 415 F.3d at 1312–17. Usually, the specification is dispositive, and it is the single best guide to the meaning of a disputed term. *Id.* at 1315.

Petitioner contends that "[n]one of the claim terms require specific construction and should receive their plain and ordinary meaning." Pet. 18 (citing Ex. 1003 ¶ 74).

"Patent owner proposes the claim terms be given their plain and ordinary meaning." Prelim. Resp. 8.

For purposes of this Decision, and based on the record before us, we determine that no construction of any term is necessary. We note that this determination does not preclude the parties from arguing their proposed constructions of the claims during trial. Indeed, the parties are hereby given

PETITIONER'S EXHIBIT 1002
US PATENT NO. 6,561,166

notice that claim construction, in general, is an issue to be addressed at trial. A final determination as to claim construction will be made at the close of the proceeding, after any hearing, based on all the evidence of record. The parties are expected to assert all of their claim construction arguments and evidence in the Petition, Patent Owner's Response, Petitioner's Reply, or otherwise during trial, as permitted by our rules.

D. Overview of the Asserted Prior Art

1. Hepburn

Hepburn discloses a system and method for controlling the temperature of emission control devices used in a direct injection spark ignition engine. Ex. 1005, 1:7–9, 1:45–48. Hepburn recognizes that operation of known DISI engines in the stratified mode may cause the catalytic converter and NOx trap to operate inefficiently. *Id.* at 1:28–30. Hepburn purports to improve upon known systems by injecting a quantity of fuel during the exhaust stroke to heat the emission control devices when it is determined that their temperature is too low. *Id.* at 1:59–64.

During operation in the stratified mode, the temperature (Ttrp) of the NOx trap is measured and compared to the critical temperature (Tcrit), which is the lowest temperature for efficient trapping effectiveness of the NOx trap and hydrocarbon oxidation of the catalytic converter. Ex. 1005, 4:27–51. If the trap temperature is greater than the critical temperature, the engine operation continues in the stratified mode. *Id.* at 4:46–51. If the trap temperature is less that the critical temperature, the difference (ΔT) between these temperatures is calculated and an additional amount of fuel corresponding to the temperature difference is determined. *Id.* at 4:52–56.

PETITIONER'S EXHIBIT 1002
US PATENT NO. 6,561,166

This additional amount of fuel is injected during the exhaust stroke to introduce unburned hydrocarbon into the exhaust stream to create an exotherm that will heat the catalytic converter and the NOx trap above the critical temperature. *Id.* at 4:56–62.

2. Price

Price discloses a system for managing catalytic treatment of exhaust gas from an internal combustion engine. Ex. 1006, 1:4–6. Price recognizes that when internal combustion engines are operated in the stratified mode, the catalyst used in the exhaust system to reduce emissions is not maintained at the required operating temperature necessary for effective treatment of the exhaust gas. *Id.* at 2:32–55. Price purports to improve upon known systems by introducing vaporized fuel into the exhaust system upstream from the catalytic treatment means. *Id.* at 3:6–22. Price adds conduit 40 between the carbon canister separator 10, which collects evaporated fuel vapors from the gasoline tank, and engine exhaust system 43 upstream of exhaust catalyst device 44. *Id.* at 9:5–9, Fig. 2. "When the valve 42 is open, the pump 41 draws air through the separator 10 via the conduit 28 to entrain fuel vapor held therein and deliver it to the engine exhaust system 43 upstream of the exhaust catalyst device 44." *Id.* at 9:9–13. This fuel vapor is more volatile than liquid fuel and, thus, is more readily ignitable than liquid fuel and requires less heat energy input to achieve combustion. *Id.* at 4:11–16. Price also discloses delivering fuel vapors to the combustion chambers early in the air induction stroke in stratified operation so that they will not be combusted and, instead, delivered to the catalytic converter. *Id.* at 4:63–5:3.

3. Kainz

Kainz discloses an automobile engine fuel control system. Ex. 1007, 1:6–10. Kainz recognizes that it is customary to use an oxygen sensor in an automobile exhaust pipe for emission control feedback, and that, generally, two types of sensors are used. *Id.* at 1:14–21. A switching sensor has a bi-stable output voltage that switches between first and second states corresponding to lean and rich conditions of the sensed exhaust gas relative to a stoichiometric air/fuel ratio. *Id.* at 1:21–27. A universal exhaust gas oxygen sensor, which is also called a wide-range oxygen sensor, has an analog output that varies in amplitude in relation to the deviation of the sensed exhaust gas from the stoichiometric air/fuel ratio. *Id.* at 1:27–31. "[T]he switching sensor is less expensive but provides limited information, whereas the wide-range sensor enables improved fuel control performance" but requires calibration. *Id.* at 1:31–40. Additionally, the sensor characteristics of the wide-range sensor may tend to drift with age and/or other factors, leading to fuel control errors since the one-time calibration cannot account for the drift. *Id.* at 1:40–43.

Kainz purports to provide "an improved fuel control in which the transfer function of a wide-range exhaust gas oxygen sensor is automatically and periodically learned or calibrated in the course of vehicle operation." Ex. 1007, 1:47–50. The system includes a universal gas oxygen sensor in the exhaust pipe upstream from a catalytic converter and a switching sensor in the exhaust pipe downstream from the catalytic converter. *Id.* at 3:2–10, Fig. 1. The universal gas oxygen sensor provides feedback to the engine controller to adjust the amount of fuel that is delivered to each cylinder

PETITIONER'S EXHIBIT 1002
US PATENT NO. 6,561,166

during operation of the vehicle. *Id.* at 3:28–35. The switching sensor is used to calibrate the universal gas oxygen sensor. *Id.* at 3:10–11.

4. Kerns

Kerns discloses a system and method for controlling the temperature of emission control devices used in a direct injection spark ignition engine. Ex. 1008, 1:6–7, 1:61–62. Kerns recognizes that known DISI engines include catalytic converters and NOx traps to reduce emissions and are coupled to fuel vapor recovery systems to allow purging of fuel vapors into the combustion chambers, but can do so while operating in the stratified mode only when the catalyst temperature is high enough to convert the unburned hydrocarbons. *Id.* at 1:23–43. Because less heat is generated in the stratified mode of operation, it takes a long time after a cold start before purging is allowed and the catalyst may not maintain the required temperature, preventing vapor purge and thereby limiting stratified operation. *Id.* at 1:46–58.

Kerns purports to improve upon known systems by generating heat in the emission control device by providing unburned fuel vapor from the fuel system along with excess oxygen from lean combustion in the stratified mode of operation. Ex. 1008, 1:61–62, 4:37–40. Fuel vapors are introduced during the induction stroke, thereby forming a homogeneous fuel vapor mixture at a lean air/fuel ratio that will not support burning of the fuel vapor. *Id.* at 4:40–43. The fuel vapors pass through the cylinder unburned because the overall air/fuel ratio is still lean of stoichiometry. *Id.* at 4:44–46. The unburned vapors react exothermically with the excess oxygen in the emission control devices. *Id.*

PETITIONER'S EXHIBIT 1002
US PATENT NO. 6,561,166

In one embodiment, the system controls the flow of purge vapors to maintain the temperature of both the NOx trap and the catalytic converter at acceptable levels. Ex. 1008, 10:47–50, Fig. 7. The system determines whether the temperature of the catalytic converter is between an upper threshold above which it operates at peak efficiency and a lower threshold below which it cannot support an exothermic reaction of unburned fuel. *Id.* at 10:57–64. Similarly, the system determines whether the temperature of the NOx trap is between an upper threshold above which it operates at peak efficiency and a lower threshold below which it cannot support an exothermic reaction of unburned fuel. *Id.* at 11:1–8, 11:30–32. A total error value is calculated as the sum of the difference between the desired temperature for maximum efficiency and the actual temperature for both the catalytic converter and the NOx trap. *Id.* at 10:64–67, 11:8–15; *see also id.* at 2:17–23 (explaining that the desired temperature for the emission control devices is that at which they operate at maximum system efficiency). If the temperature of the catalytic converter is not within its thresholds, the total error value is based solely on the NOx trap. *Id.* at 11:30–37.

An initial control value is calculated as a function of the total error. Ex. 1008, 11:15–19. This initial value is clipped based on a calculated fuel vapor concentration in the combustion chamber to ensure fuel vapors pass therethrough unburned. *Id.* at 9:19–23, 11:19–23. The clipped value is further limited to ensure that the temperature of the catalytic converter will not be increased to an unacceptable level. *Id.* at 10:32–46, 11:26–29. The system controls the flow of purge vapors into the engine and emission control devices based on this final control signal value. *Id.* at 4:25–29.

PETITIONER'S EXHIBIT 1002
US PATENT NO. 6,561,166

E. Challenge Based on Hepburn and Price

Petitioner argues that claims 1–4 would have been obvious over Hepburn and Price. Pet. 27–57. In support of its showing, Petitioner relies upon the Bower Declaration. *Id.* (citing Ex. 1003). We have reviewed Petitioner's assertions and supporting evidence. For the reasons discussed below, and based on the record before us, we determine that Petitioner demonstrates a reasonable likelihood of prevailing in showing that claims 1–4 would have been obvious over the combination of Hepburn and Price.

1. Claim 1

Petitioner relies on Hepburn to disclose a method of controlling a DISI engine substantially as recited in claim 1 and relies on Price to teach enabling evaporated fuel vapors to enter the combustion chamber and adjusting flow rate of the evaporated fuel vapors as a function of a second measured temperature. Pet. 35–51.

a. Preamble

Claim 1 recites,

> A method of controlling a direct injection spark ignited internal combustion engine that is capable of operating in a stratified mode where fuel is injected during a compression stroke of the engine and a homogeneous mode where fuels is injected during an intake stroke of the engine, the internal combustion engine having a catalytic converter and an NO_x trap, comprising:

Ex. 1001, 6:9–15. Petitioner argues that Hepburn discloses a DISI engine operable in a stratified mode or a homogenous mode, the engine having a catalytic converter and an NOx trap. Pet. 35–36 (citing Ex. 1003

PETITIONER'S EXHIBIT 1002
US PATENT NO. 6,561,166

¶¶ 101–104; Ex. 1005, 1:65–2:2, 2:16–14, 2:55–57, 3:21–22, 3:35–48, 3:61–67, Fig. 1).

Patent Owner does not contest this aspect of the Petition. *See generally* Prelim. Resp.

Hepburn discloses that "[d]irect injection spark ignited internal combustion engine 10, comprising a plurality of combustion chambers, is controlled by electronic engine controller 12." Ex. 1005, 2:55–57, Fig. 1. "Controller 12 causes combustion chamber 30 to operate in either a homogeneous air/fuel mode or a stratified air/fuel mode by controlling injection timing." *Id.* at 3:35–37. Catalytic converter 70 and NOx trap 72 are provided in the engine exhaust manifold 48. *Id.* at 3:21–22, 3:61–62. Thus, to the extent the preamble is limiting, Hepburn supports Petitioner's contentions.

b. Measuring a First Temperature

Claim 1 recites "measuring a first temperature of an NO_x trap that is in contact with an exhaust gas exhausted from a combustion chamber while the engine is operating in the stratified mode." Ex. 1001, 6:16–19. Petitioner argues that, "[i]f the engine 10 is operating in the stratified mode, Hepburn's control method determines, at step 210, the temperature of the NOx trap 72" and "Hepburn's NOx trap 72 is coupled to exhaust manifold 48, which receives gas exhausted from the combustion chambers and conveys the exhaust gas to NOx trap 72." Pet. 37–38 (citing Ex. 1003 ¶ 107; Ex. 1005, 2:62–66, Fig. 1).

Patent Owner does not contest this aspect of the Petition. *See generally* Prelim. Resp.

Hepburn discloses that, "[w]hen engine 10 is operating in the stratified mode (step 202), temperature of NOx trap 72 (Ttrp) is determined from the Temperature estimator. . . . Alternatively, the temperature of NOx trap 72 may be provided by temperature sensor 126." Ex. 1005, 4:39–45. The NOx trap is in the exhaust manifold positioned downstream from the catalytic converter. *Id.* at 3:61–62, Fig. 1. Thus, Hepburn supports Petitioner's contentions.

c. Enabling

Claim 1 recites "enabling evaporated fuel vapors to enter the combustion chamber at a flow rate while the engine is operating in the stratified mode." Ex. 1001, 6:20–22. Petitioner argues that "Hepburn discloses introducing additional fuel into the combustion chamber 30 while engine 10 is operating in the stratified mode to raise the temperature of the NOx trap 72." Pet. 39 (citing Ex. 1003 ¶ 110; Ex. 1005, code (57), 4:54–58). Petitioner argues that Hepburn "suggests that evaporated fuel vapor purged from the fuel tank can be an additional fuel source" and a person having ordinary skill in the art "would have understood that Hepburn suggests enabling evaporated fuel vapors to enter the combustion chamber while the engine is operating in the stratified mode as claimed." *Id.* at 39–40 (citing Ex. 1003 ¶ 111; Ex. 1005, 4:34–37).

Hepburn discloses that, under certain circumstances, an "[a]dditional quantity of fuel Fadd is injected during the exhaust stroke of each combustion chamber to introduce unburned HC into the exhaust stream." Ex. 1005, 4:56–58. Thus, Hepburn discloses injecting liquid fuel via fuel injector 66. Hepburn's only mention of fuel vapor is in determining whether the engine is operated in the stratified or homogenous mode: "Selection of

homogeneous lean or stoichiometric mode is determined by other operating parameters such as desired power, fuel vapor purge, and NOx trap 72 purge." *Id.* at 4:34–37. On this record, Petitioner does not appear to explain adequately how Hepburn "suggests" adding evaporated fuel vapor to the combustion chamber during an exhaust stroke in stratified operation rather than, for example, adding these vapors to the combustion chamber during an intake stroke in homogenous operation. We note that the testimony of Petitioner's declarant is essentially the same as the arguments presented in the Petitioner, and, thus, likewise fails to provide adequate explanation. *See* Ex. 1003 ¶ 111. Whether Hepburn's disclosure alone renders obvious the step of enabling evaporated fuel vapors to enter the combustion chamber in stratified operation is an issue to be decided at trial.

Petitioner also relies on Price to teach delivering evaporated fuel vapor to the combustion chambers through the manifold during stratified operation. Pet. 40–42 (citing Ex. 1003 ¶¶ 112–113; Ex. 1006, 3:35–46, 4:49–5:3, 7:21–26, 9:16–20, 11:64–12:9, Fig. 2). Petitioner argues that it would have been obvious to a person having ordinary skill in the art "to replace or supplement Hepburn's additional liquid fuel injection routine with Price's known technique for selectively, adjustably introducing fuel vapors through [the] combustion chamber into the exhaust system while the engine is operating in stratified mode" because this modification "would maintain Hepburn's NOx trap 72 at an effective operation temperature while using less fuel." *Id.* at 42 (citing Ex. 1003 ¶¶ 95, 114; Ex. 1006, 3:6–9, 4:49–55); *see also id.* at 31–33. Petitioner argues that "modifying the software instructions executed by Hepburn's controller 12 so that fuel vapor is selectively purged into the combustion chamber . . . would have simply been

applying a known technique to a known device to yield the predictable result of maintaining the NOx trap temperature with less fuel usage," and that a person having ordinary skill in the art would have a reasonable expectation of success in making this modification. *Id.* at 42 (citing Ex. 1003 ¶¶ 96, 115; *KSR*, 550 U.S. at 419–21).

Hepburn discloses injecting a quantity of fuel during the exhaust stroke to heat the emission control devices when it is determined that their temperature is too low. Ex. 1005, 1:59–64; 4:52–62. Price discloses that,

> Experiments have shown that the introduction of liquid fuel directly into the exhaust system of an engine upstream of the catalyst, with the intention that combustion of that fuel will provide sufficient heat input to the catalyst to maintain it at the required operational temperature, has not been completely successful.

Ex. 1006, 2:56–61. Price further discloses that,

> It has been found that the fuel provided by separation of the vapour from the engine[']s normal liquid fuel is typically more volatile than the liquid fuel from which it is derived, and is therefore more readily ignitable than the liquid fuel as a whole, thus requiring less heat energy input to achieve combustion.

Id. at 4:11–16. Accordingly, Price provides conduit 9 connecting vapor separator 10 with air induction passage 15 through which fuel vapor is communicated to the combustion chambers of the engine. *Id.* at 8:3–8, 9:16–19, Fig. 2. Price delivers these fuel vapors to the combustion chambers early in the air induction stroke in stratified operation so that they will not be combusted and, instead, will be passed on to the exhaust system unburned. *Id.* at 4:63–5:3.

Thus, Hepburn and Price support Petitioner's contentions. We further determine that Petitioner has set forth reasoning with rational underpinning for modifying Hepburn to supply evaporated fuel vapors to the emission control devices. As noted above, Price discloses that the use of fuel vapors is more efficient to heat emission control devices (Ex. 1006, 4:11–16), supporting Petitioner's contention that the modification "would maintain Hepburn's NOx trap 72 at an effective operation temperature while using less fuel." Pet. 42 (citing Ex. 1003 ¶¶ 95, 114).

Patent Owner argues that a person having ordinary skill in the art "attempting to seek solutions to the temperature control of emission control devices coupled to DISI engines would be discouraged from looking to Price, since Price is directed to the management of catalytic treatment of the exhaust gas from such engines." Prelim. Resp. 18–19 (emphasis omitted).

This argument does not persuade us to deny institution. Patent Owner merely makes conclusory statements without presenting supporting evidence or persuasive technical reasoning. However, "[a]ttorney's argument in a brief cannot take the place of evidence." *In re Pearson*, 494 F.2d 1399, 1405 (CCPA 1974). Moreover, Patent Owner does not explain adequately how "temperature control of emission control devices" is "quite different" than "management of catalytic treatment of the exhaust gas," which, we note, is performed by an emission control device. To the contrary, it appears that both Hepburn and Price are directed to the operation of emission control devices.

Additionally, Patent Owner notes that Petitioner relies on Price's discussion of its catalytic converter and argues that, if a person having ordinary skill in the art were to apply Price's teaching to Hepburn, the

skilled artisan would apply the teachings to Hepburn's catalytic converter rather than to its NOx trap. Prelim. Resp. 20–23.

This argument does not persuade us to deny institution. Petitioner relies on Price's disclosure of delivering fuel vapor to the combustion chamber during stratified operation. Pet. 41 (citing Ex. 1003 ¶ 113; Ex. 1006, 4:49–5:3, 11:64–12:9). Price discloses delivering fuel vapors to the combustion chambers early in the air induction stroke during stratified operation so that the vapors will not be combusted and, instead, will be delivered to the catalytic converter. Ex. 1005, 4:63–5:3. Price further discloses that fuel vapor is more volatile than liquid fuel and, thus, is more readily ignitable than liquid fuel and requires less heat energy input to achieve combustion. *Id.* at 4:11–16. Applying this teaching to Hepburn, which teaches injecting unburned fuel into the exhaust system to heat both the catalytic converter and the NOx trap (*see, e.g.*, Ex. 1005, 4:52–62), it appears that the fuel vapors would raise the temperature of the NOx trap as asserted by Petitioner.

d. Measuring a Second Temperature

Claim 1 recites "measuring a second temperature of the NO_x trap while the engine is operating in the stratified mode." Ex. 1001, 6:23–24. Petitioner argues that "Hepburn's control method is a continuous loop that is repeatedly executed during engine operation to maintain the temperature of NOx trap 72 at a desired temperature." Pet. 43 (citing Ex. 1003 ¶ 119). Petitioner maps the measurement of the NOx trap temperature during the second iteration of Hepburn's method to the recited measuring a second temperature of the NOx trap during stratified operation. *Id.* at 43–44 (citing Ex. 1003 ¶ 119). Petitioner further argues that, to the extent not explicitly

disclosed by Hepburn, it would have been obvious to repeatedly execute Hepburn's control method. *Id.* at 44–45 (citing Ex. 1003 ¶120).

Patent Owner does not contest this aspect of the Petition. *See generally* Prelim. Resp.

Hepburn discloses that its control method *maintains* the temperature of its emission control devices at desired temperatures for effective operation. *See, e.g.*, Ex. 1005, 1:65–2:5, 2:37–40, 4:27–30, Fig. 2 ("return" step). Thus, we agree that Hepburn repeatedly executes its control method such that the second iteration of measuring the temperature of the NOx trap (*see id.* at 4:39–45) constitutes the recited measuring a second temperature of the NOx trap. Accordingly, Hepburn supports Petitioner's contentions.

e. Adjusting

Claim 1 recites "adjusting the flow rate of the evaporated fuel vapors as a function of the second temperature when the second temperature is within a lower temperature threshold and an upper temperature threshold." Ex. 1001, 6:25–28. Petitioner maps Hepburn's critical temperature Tcrit to the recited upper threshold, arguing that Hepburn's control method does not inject fuel during the exhaust stroke if the measured temperature of the NOx trap is above the critical temperature. Pet. 45–46 (citing Ex. 1003 ¶ 123; Ex. 1005, 4:45–51, Fig. 2).

Regarding the recited lower temperature threshold, Petitioner notes that, if the measured NOx trap temperature is below the critical temperature, Hepburn adds a quantity of fuel Fadd to the exhaust stroke, the quantity being proportional to the difference between the two temperatures. Pet. 46–47 (citing Ex. 1003 ¶ 124; Ex. 1005, 4:52–62). Petitioner further notes that, if the calculated amount of fuel to add is greater than a maximum

PETITIONER'S EXHIBIT 1002
US PATENT NO. 6,561,166

amount, Hepburn switches to the homogenous mode and, Petitioner argues, no additional fuel is added. *Id.* at 47 (citing Ex. 1003 ¶ 125; Ex. 1005, 4:63–5:5). Petitioner argues that a person having ordinary skill in the art would have understood that switching to the homogenous mode "occurs when the NOx trap is at a certain temperature because the additional fuel amount (Fadd) is proportional to the difference (ΔT) between the measured NOx trap temperature and the critical temperature." *Id.* (citing Ex. 1003 ¶ 125; Ex. 1005, 4:52–62).

Patent Owner does not contest this aspect of the Petition. *See generally* Prelim. Resp.

Hepburn discloses that, "[w]hen NOx trap temperature Ttrp is greater than critical temperature (Tcrit) . . ., engine operation continues with fuel injection and ignition timing scheduled for stratified charge mode (steps 214 and 220)." Ex. 1005, 4:46–51; *see also id.* at 3:55–58 (explaining that when fuel is injected during the exhaust stroke during stratified operation, this is referred to as the "split mode of operation"). Thus, when the NOx trap temperature is greater than the critical temperature, no fuel is added to the exhaust system.

Hepburn further discloses that, if the temperature of the NOx trap is less than the critical temperature, the difference (ΔT) between these temperatures is calculated and an additional amount of fuel corresponding to this temperature difference is determined and added to the combustion chamber during the exhaust stroke. *Id.* at 4:52–56. At some value for the NOx trap temperature, the amount of added fuel corresponding to the temperature difference with respect to the critical temperature is too great, and the system switches to the homogenous mode of operation. *Id.*

PETITIONER'S EXHIBIT 1002
US PATENT NO. 6,561,166

at 4:63–5:3. When the engine is switched to the homogeneous mode of operation, the addition of fuel to the exhaust system is discontinued. *Id.* at 2:22–26, 2:30–36. Thus, when the NOx trap is between the critical temperature and the temperature at which the engine is switched to the homogenous operation mode, the amount of fuel that is added during the exhaust stroke is adjusted. Thus, Hepburn supports Petitioner's contentions.

Alternatively, Petitioner relies on Price to teach "adjusting [the] flow rate of the evaporated fuel vapors as a function of the second measured temperature when set within upper and lower temperature thresholds." Pet. 49 (citing Ex. 1003 ¶ 128; Ex. 1006, 3:23–34). Petitioner argues that it would have been obvious to adjust Hepburn's introduction of fuel during the exhaust stroke as a function of the second measured temperature of the NOx trap when the second measured temperature is between threshold limits to maintain the NOx trap at an effective operation temperature in a fuel efficient manner. *Id.* at 50 (citing Ex. 1003 ¶¶ 99, 129).

Patent Owner does not contest this aspect of the Petition separate from its arguments against combining Hepburn and Price discussed above. *See generally* Prelim. Resp.

Price discloses that,

> Fuel can also be introduced when the temperature of the catalytic treatment means is above said first selected temperature and below a second selected temperature of the catalytic treatment means, said second selected temperature being higher than said first selected temperature. This can maintain the catalytic treatment means within a temperature range which allows effective operation thereof.
>
> The introduction of fuel may be discontinued when the temperature of the catalytic treatment means exceeds the second

PETITIONER'S EXHIBIT 1002
US PATENT NO. 6,561,166

> selected temperature. This helps to prevent the catalytic treatment means from being damaged due to overheating.

Ex. 1006, 3:23–34. Thus, Price supports Petitioner's contentions. For the reasons set forth in section II.E.1.c above, we determine that Petitioner has set forth reasoning with rational underpinning for modifying Hepburn to supply evaporated fuel vapors to the emission control devices.

f. Conclusion

Accordingly, for the foregoing reasons and based on this preliminary record, we determine that Petitioner has established a reasonable likelihood of prevailing on its assertion that claim 1 would have been obvious over the combination of Hepburn and Price.

2. Dependent Claims 2–4

Claims 2–4 depend, directly or indirectly, from claim 1. Ex. 1001, 6:29–38. The Petition maps these challenged dependent claims to Hepburn and Price. Pet. 51–57. Patent Owner does not challenge separately the arguments and evidence presented for the dependent claims. *See generally* Prelim. Resp. Based on our review of the current record before us, we determine that the information presented in the Petition establishes that there is a reasonable likelihood that Petitioner would prevail in challenging claims 2–4 as being obvious over the combination of Hepburn and Price.

F. Challenge Based on Hepburn, Price, and Kainz

Petitioner argues that claim 5 would have been obvious over Hepburn, Price, and Kainz. Pet. 57–63. In support of its showing, Petitioner relies upon the Bower Declaration. *Id.* (citing Ex. 1003). We have reviewed Petitioner's assertions and supporting evidence. For the reasons discussed

PETITIONER'S EXHIBIT 1002
US PATENT NO. 6,561,166

below, and based on the record before us, we determine that Petitioner demonstrates a reasonable likelihood of prevailing in showing that claim 5 would have been obvious over the combination of Hepburn, Price, and Kainz.

Claim 5 depends indirectly from claim 1. Ex. 1001, 6:39–41. Petitioner relies on Hepburn and Price as set forth in section II.E above and relies on Kainz to teach use of a universal exhaust gas oxygen sensor. Pet. 61. Petitioner argues that it would have been obvious to use Kainz's universal exhaust gas oxygen sensor 64 in place of Hepburn's exhaust gas sensor 76 to determine the concentration of the fuel vapor more accurately. *Id.* at 58–60, 62–63.

Patent Owner does not address separately the arguments and evidence presented for the dependent claims. *See generally* Prelim. Resp.

Based on our review of the current record before us, we determine that the information presented in the Petition establishes that there is a reasonable likelihood that Petitioner would prevail in its challenge to claim 5 as being obvious over the combination of Hepburn, Price, and Kainz.

G. Challenge Based on Kerns

Petitioner contends that Kerns anticipates claims 1–5 because Kerns discloses all of the limitations of these claims. Pet. 63–85. Petitioner's contentions are based primarily on the embodiment shown in Figure 7. *Id.*

1. Discretion Under 35 U.S.C. § 325(d)

Patent Owner argues that we should not consider Kerns because it was of record during examination of the patent application resulting in the '166

PETITIONER'S EXHIBIT 1002
US PATENT NO. 6,561,166

patent. Prelim. Resp. 2–3, 13–15. Petitioner argues that we should not exercise our discretion to deny institution. Pet. 63–68.

a. Legal Framework

Section 325(d) provides that the Director may elect not to institute[3] a proceeding when "the same or substantially the same prior art or arguments previously were presented to the Office." In evaluating whether to exercise our discretion under § 325(d), we weigh the following non-exclusive factors:

> (a) the similarities and material differences between the asserted art and the prior art involved during examination;
>
> (b) the cumulative nature of the asserted art and the prior art evaluated during examination;
>
> (c) the extent to which the asserted art was evaluated during examination, including whether the prior art was the basis for rejection;
>
> (d) the extent of the overlap between the arguments made during examination and the manner in which Petitioner relies on the prior art or Patent Owner distinguishes the prior art;
>
> (e) whether Petitioner has pointed out sufficiently how the Examiner erred in its evaluation of the asserted prior art; and
>
> (f) the extent to which additional evidence and facts presented in the Petition warrant reconsideration of the prior art or arguments.

Becton, Dickinson & Co. v. B. Braun Melsungen AG, IPR2017-01586, Paper 8 at 17–18 (PTAB Dec. 15, 2017) (designated precedential in relevant part). Although *Becton, Dickinson* involved prior art or arguments that were presented during examination of the patent application, the enumerated factors "should be read broadly . . . to apply to any situation in which a

[3] The Board institutes trial on behalf of the Director. 37 C.F.R. § 42.4(a).

PETITIONER'S EXHIBIT 1002
US PATENT NO. 6,561,166

petition relies on the same or substantially the same art or arguments previously presented to the Office during a proceeding pertaining to the challenged patent." *Advanced Bionics, LLC v. Med-El Electromedizinishe Geräte GMBH,* IPR2019-01469, Paper 6 at 10 (Feb. 13, 2020) (designated precedential). Factors (a), (b), and (d) relate to whether the art and arguments presented in the petition are the same or substantially the same as those previously presented to the Office. *Id.* Factors (c), (e), and (f) "relate to whether the petitioner has demonstrated a material error by the Office" in its prior consideration of that art or arguments. *Id.*

> Thus, under § 325(d), the Board uses the following two-part framework: (1) whether the same or substantially the same art previously was presented to the Office or whether the same or substantially the same arguments previously were presented to the Office; and (2) if either condition of [the] first part of the framework is satisfied, whether the petitioner has demonstrated that the Office erred in a manner material to the patentability of [the] challenged claims.

Id. at 8.

b. Background

The application resulting in the '166 patent was filed with 24 claims. Ex. 1002, 21–25. Claims 1 (directed to a "method of controlling a direct injection spark ignited internal combustion engine"), 12 (directed to an "engine controller for a direct injection spark ignited engine"), and 24 (directed to a "canister purge valve controller for a direct injection spark ignited internal combustion engine") were independent. *Id.* Claim 1 as originally filed is reproduced below:

> 1. A method of controlling a direct injection spark ignited internal combustion engine that is capable of operating in a stratified mode where fuel is injected during a compression

PETITIONER'S EXHIBIT 1002
US PATENT NO. 6,561,166

> stroke of the engine and a homogeneous mode where fuels is injected during an intake stroke of the engine, comprising:
>
> measuring a first temperature of a catalyst that is in contact with an exhaust gas exhausted from a combustion chamber while the engine is operating in the stratified mode;
>
> enabling evaporated fuel vapors to enter the combustion chamber at a flow rate while the engine is operating in the stratified mode;
>
> measuring a second temperature of the catalyst while the engine is operating in the stratified mode; and
>
> adjusting the flow rate of the evaporated fuel vapors as a function of the second temperature when the second temperature is within a lower temperature threshold and an upper temperature threshold.

Id. at 21.

During prosecution, the Patent Examiner rejected all of the claims as being anticipated by Kerns. Ex. 1002, 47–48. According to the Examiner, "Kerns teaches a method of controlling a direct injection spark ignited internal combustion engine comprising a step of adjusting a flow rate of evaporated fuel vapors as a function of a temperature of a catalyst (see figures 8-10, also col. 11 line 42 through col. 13 line 10)." *Id.* at 48.

The Applicant responded by, *inter alia*, amending the preamble of claim 1 to recite that the internal combustion engine has a catalytic converter and an NO_X trap and amending the measuring steps to measure first and second temperatures of the NO_X trap. Ex. 1002, 53, 57. The Applicant argued that, "[i]n Kerns, fuel vapors are purged when the *downstream* emission control device temperature is below a predetermined threshold and the *upstream* emission control device temperature is above a predetermined temperature (See Col. 2, lines 6-10, and lines 27-32; and Col. 7, lines 49-55)." *Id.* at 55. The Applicant argued that the amended claims were

allowable because, "[i]n contrast, the present invention adjusts fuel vapors in an internal combustion engine when the temperature of a NO_x trap is within upper and lower temperature thresholds." *Id.*

The Examiner agreed that the amendment to claim 1 made it and its dependent claims allowable over Kerns, but rejected the other claims as being anticipated by Kerns. Ex. 1002, 61. In response, the Applicant canceled the rejected claims. *Id.* at 67. The Examiner then issued a Notice of Allowance for claims 1–11 without providing a statement of the reasons for allowance. *Id.* at 68–72.

c. Analysis

Petitioner acknowledges that "Kerns was applied during prosecution," but argues that "*Becton*[, *Dickinson*] Factors (d)-(f) weigh substantially in favor of the Board *not* exercising its discretion to deny institution." Pet. 63–64. Petitioner argues that "the Examiner erred during examination by overlooking a highly pertinent additional embodiment of Kerns, namely, the Figure 7 embodiment." *Id.* at 64. Petitioner argues that the Kerns Figure 7 embodiment anticipates claims 1–5 and that *Becton, Dickinson* factors (d)–(f) weigh in favor of institution. *Id.* at 65–68. Petitioner's 325(d) arguments admittedly focus on the second part of the *Advanced Bionics* framework. Ex. 1031, 10–11 (seeking authorization to file a Reply to Patent Owner's Preliminary Response "to make sure it's very clear on the record how [the *Becton, Dickinson*] factors [mentioned in the Petition] fall under the second step of the *Advanced Bionics* framework").

Patent Owner argues that, "[b]ecause *Kerns* was specifically considered and distinguished over during prosecution, it should not be considered under the provisions of 35 U.S.C. § 325(d)." Prelim. Resp. 13.

Patent Owner argues that, during prosecution, the "Applicant distinguished over *Kerns* by amending the claims to make clear that it is the first and second temperatures of the NO_x trap, and not that of the separate catalytic converter in *Kerns*, that are measured in practicing the claimed invention." *Id.* at 13–14 (citing Ex. 1002, 67). Regarding the Figure 7 embodiment, Patent Owner argues that "Petitioner presumes that because a specific embodiment in *Kerns* was not specifically discussed, it must have been overlooked." *Id.* at 15.

As discussed above, it is evident from the record, and the parties agree, that Kerns was considered and relied upon by the Examiner during prosecution of the application resulting in the '166 patent. Thus, we determine that the first part of the *Advanced Bionics* framework is satisfied. Our analysis therefore focuses on the second part of the framework.

Although the Examiner did not indicate the reasons for allowing claim 1–11 (*see* Ex. 1002, 61, 68–72), it is evident that the Examiner did not maintain the previous rejection of these claims as being anticipated by Kerns based on the Applicant's amendment of claim 1 to require that the second temperature measurement is made of the NOx trap, rather than "the catalyst," such that the flow rate is adjusted when this second temperature measurement of the NOx trap is within lower and upper thresholds. *See id.* at 53, 55 ("the present invention adjusts fuel vapors in an internal combustion engine when the temperature of a NO_x trap is within upper and lower temperature thresholds"), 57. However, as discussed in more detail below, Kerns discloses an embodiment, illustrated in Figure 7, in which the flow rate is adjusted as a function of a second temperature measurement of NOx trap 72 when that measurement is between lower threshold value T1′

PETITIONER'S EXHIBIT 1002
US PATENT NO. 6,561,166

and upper threshold value T2′. *See, e.g.*, Ex. 1008, 11:1–3 ("Continuing with FIG. 7, in step 716 a determination is made as to whether temperature Ttrp of NOx trap 72 is between threshold values T1′ and T2′."); Fig. 7. Notably, neither the Examiner nor the Applicant addressed this embodiment during prosecution. *See* Ex. 1002, 48 (citing Ex. 1008, 11:42–13:10, Figs. 8–10), 55 (citing Ex. 1008, 2:2–10, 2:24–32, 3:59–60, 4:18–20, 7:29–55, Fig. 1), 61 (citing Ex. 1008, Fig. 5).

We find that Petitioner has sufficiently shown how the Examiner erred in a material manner during prosecution of the application resulting in the '166 patent by failing to fully consider the embodiment illustrated in Kerns's Figure 7 and the corresponding disclosure of this embodiment in columns 10 and 11. *See Advanced Bionics*, Paper 6 at 8 n.9 ("An example of a material error may include misapprehending or overlooking specific teachings of the relevant prior art where those teachings impact patentability of the challenged claims."). Accordingly, we decline to exercise our discretion to deny institution based on the Office's prior consideration of Kerns.

2. Claim 1

Petitioner relies on Kerns to anticipate claim 1. Pet. 69–81.

a. Preamble

Claim 1 recites,

> A method of controlling a direct injection spark ignited internal combustion engine that is capable of operating in a stratified mode where fuel is injected during a compression stroke of the engine and a homogeneous mode where fuels is injected during an intake stroke of the engine, the internal combustion engine having a catalytic converter and an NOx trap, comprising:

PETITIONER'S EXHIBIT 1002
US PATENT NO. 6,561,166

Ex. 1001, 6:9–15. Petitioner argues that Kerns discloses a DISI engine operable in a stratified mode or a homogenous mode, the engine having a catalytic converter and an NOx trap. Pet. 69 (citing Ex. 1003 ¶ 164; Ex. 1008, 2:59–3:3, 3:32–45, 3:59–62, Fig. 1).

Patent Owner does not contest this aspect of the Petition. *See generally* Prelim. Resp.

Kerns discloses that "[d]irect injection spark ignited internal combustion engine 10, comprising a plurality of combustion chambers, is controlled by electronic engine controller 12." Ex. 1008, 2:59–61, Fig. 1. "Controller 12 causes combustion chamber 30 to operate in either a homogeneous air/fuel mode or a stratified air/fuel mode by controlling injection timing." *Id.* at 3:32–34. Catalytic converter 70 and NOx trap 72 are provided in the engine exhaust manifold 48. *Id.* at 3:22–23, 3:59–60. Thus, to the extent the preamble is limiting, Kerns supports Petitioner's contentions.

b. Measuring a First Temperature

Claim 1 recites "measuring a first temperature of an NO_x trap that is in contact with an exhaust gas exhausted from a combustion chamber while the engine is operating in the stratified mode." Ex. 1001, 6:16–19. Petitioner argues that, "[i]f the engine 10 is operating in the stratified mode, Kerns's control method proceeds, at step 716, to determine whether the NOx trap temperature T_{trp} is between a lower temperature threshold T'_1 and an upper temperature threshold T'_2" and "Kerns's NOx trap 72 is coupled to exhaust manifold 48," which "receives exhaust gas exhausted from a combustion

chamber and conveys the exhaust gas to NOx trap 72." Pet. 72–73 (citing Ex. 1003 ¶ 168; Ex. 1008, 3:58–64, 11:1–3, Fig. 1).[4]

Patent Owner does not contest this aspect of the Petition. *See generally* Prelim. Resp.

Kerns discloses that, after it has been determined that engine 10 is operating in the stratified mode, Kerns determines the temperature (Ttrp) of NOx trap 72. Ex. 1008, 11:1–3. This determination is either inferred from engine operation or provided by temperature sensor 126. *Id.* at 4:18–24. The NOx trap is in the exhaust manifold positioned downstream from the catalytic converter. *Id.* at 3:59–61, Fig. 1. Thus, Kerns supports Petitioner's contentions.

c. Enabling

Claim 1 recites "enabling evaporated fuel vapors to enter the combustion chamber at a flow rate while the engine is operating in the stratified mode." Ex. 1001, 6:20–22. Petitioner argues that Kerns's fuel system 130 is "configured to generate fuel vapors that pass through tube 132 into the intake manifold 44" and that Kerns discloses "introducing fuel vapors while the engine 10 is operating in stratified mode so the 'fuel vapors pass through the cylinder unburned and react exothermically with the excess oxygen' in the exhaust manifold 48.'" Pet. 74–75 (citing Ex. 1008, 4:25–29, 4:31–46, Fig. 1).

---

[4] We understand Petitioner's citation to Ex. 1008, "4:37–43" (Pet. 72) to be a typographical error, because, as indicated above, the quoted language appears at column 11, lines 1–3. Similarly, we understand Petitioner's citation to "Ex. 1005, 3:58-54; FIG. 1" (*id.* at 73) to be a typographical error with the intended citation being to Exhibit 1008, as indicated above.

PETITIONER'S EXHIBIT 1002
US PATENT NO. 6,561,166

Patent Owner does not contest this aspect of the Petition. *See generally* Prelim. Resp.

Kerns discloses,

> Heat is generated in the [emission control] device by providing unburned fuel vapor (HC) from fuel system 130 along with excess oxygen from lean combustion . . . by operating the engine in a stratified mode and introducing fuel vapors during the induction stroke, thereby forming a homogeneous fuel vapor mixture at a lean air/fuel ratio that will not support burning of the fuel vapor. Therefore, the fuel vapors pass through the cylinder unburned and react exothermically with the excess oxygen since the overall air/fuel ratio is still lean of stoichiometry.

Ex. 1008, 4:37–46. Thus, Kerns supports Petitioner's contentions.

d. Measuring a Second Temperature

Claim 1 recites "measuring a second temperature of the NO_x trap while the engine is operating in the stratified mode." Ex. 1001, 6:23–24. Petitioner argues that "Kerns discloses the NOx trap temperature T_{trp} is monitored continuously during engine operation to control the fuel vapor flow rate $\dot{m}_p$ accordingly." Pet. 77 (citing Ex. 1008, 7:4–14; Ex. 1003 ¶ 178) "Because the NOx trap temperature is continuously monitored during engine operation and the fuel vapor flow rate is controlled as an iterative process, Kerns's controller 12 measures the NOx trap temperature numerous times, including a second temperature measurement as claimed." *Id.* (citing Ex. 1003 ¶ 178).

Patent Owner does not contest this aspect of the Petition. *See generally* Prelim. Resp.

Kerns discloses that fuel vapors purged during stratified operation will pass through the combustion chamber unburned and react exothermically in

PETITIONER'S EXHIBIT 1002
US PATENT NO. 6,561,166

the emission control device and that, "[b]y monitoring and controlling the amount of fuel vapor ingested into the cylinders, this exothermic reaction can be used to maintain the catalyst temperature under conditions where the temperature would otherwise be lower than desired for maximum system efficiency." Ex. 1008, 2:11–23. Regarding the embodiment relied upon by Petitioner, Kerns discloses that "both emission control device temperatures are *maintained* above a value representing peak catalyst efficiency using unburned fuel vapor purge." *Id.* at 11:39–41 (emphasis added). Thus, we agree that Kerns repeatedly executes its control method such that the second iteration of measuring the temperature of the NOx trap (*see id.* at 11:1–3, 11:30–32) constitutes the recited measuring a second temperature of the NOx trap. Accordingly, Kerns supports Petitioner's contentions.

e. Adjusting

Claim 1 recites "adjusting the flow rate of the evaporated fuel vapors as a function of the second temperature when the second temperature is within a lower temperature threshold and an upper temperature threshold." Ex. 1001, 6:25–28. Petitioner argues that "[t]o adjust the fuel vapors flow rate $\dot{m}_p$, Kerns's controller 12 transmits a control signal PRG to the purge valve 134" and "[t]he control signal PRG represents the 'maximum allowable total purge flow that gives an unburnable fuel vapor concentration in the cylinder' so that fuel vapors will not combust in the cylinder and generate unwanted torque." Pet. 79 (citing Ex. 1008, 4:26–29, 9:37–48). "The control signal PRG is derived from a trap temperature error e' based on the measured NOx trap temperature T_{trp} (i.e., either steps 718, 720, 722, 724 collectively or steps 742, 744,746, 722, 724 collectively)." *Id.* (citing Ex. 1003 ¶ 182; Ex. 1008, 11:8–19, 11:30–38).

PETITIONER'S EXHIBIT 1002
US PATENT NO. 6,561,166

> Patent Owner argues that,
>
> in the Figure 7 embodiment of *Kerns* . . ., *Kerns* adjusts the flow rate of the evaporated fuel vapors into the combustion chamber not based upon a second temperature of the NOx trap as set forth, for example, in independent claim 1 of the '166 patent, but rather, . . . based on a total error (e_{tot}) based on the trap temperature error (e') and a catalyst temperature error (e).

Prelim. Resp. 16 (emphases omitted). Patent Owner argues that the prosecution history precludes including the temperature of the catalytic converter as a basis upon which the flow rate is adjusted. *Id.* at 17.

Kerns discloses that the flow rate of evaporated fuel vapors from fuel system 130 is controlled by control signal PRG. Ex. 1008, 4:25–28. As acknowledged by Patent Owner, Kerns adjusts this flow rate based on the total error etot (*see* Prelim. Resp. 16–17), which "is calculated from both trap temperature error (e′) and catalyst temperature error (e)." Ex. 1008, 11:12–15. The catalyst error is calculated as the difference between the desired catalyst temperature and the actual catalyst temperature (*id.* at 10:64–67, Fig. 7 (step 714)), and the trap error is calculated as the difference between the desired trap temperature and the actual trap temperature (*id.* at 11:8–11, 11:32–36, Fig. 7 (steps 718, 742)). Because the fuel vapor control signal is determined, at least in part, based on the NOx trap temperature, Kerns supports Petitioner's contentions. Patent Owner's arguments to the contrary do not persuade us to deny institution.

Nor do we agree with Patent Owner's contention that the prosecution history precludes the temperature of the catalytic converter from being used in any manner. Rather, the Applicant argued that "the present invention adjusts fuel vapors in an internal combustion engine when the temperature of

PETITIONER'S EXHIBIT 1002
US PATENT NO. 6,561,166

a NO_X trap is within upper and lower temperature thresholds" and "Applicants have amended independent claims 1, 12, and 24 for further clarification." Ex. 1002, 55. Applicant's arguments merely reiterate what claim 1 was amended to recite – the measuring of both the first and second temperatures is of the NOx trap rather than two separate emission devices, and the evaporated fuel flow rate is adjusted when the NOx trap temperature is within threshold limits. This, however, does not preclude the catalyst temperature from also being used. Furthermore, we do not discern any language in claim 1, and Patent Owner does not identify any such language, that would preclude the flow rate from being adjusted as a function of other factors in addition to the second temperature of the NOx trap.

Moreover, even if we agreed with Patent Owner's assertions that claim 1 requires the flow rate to be adjusted as a function of *only* the second temperature of the NOx trap when the second temperature is within lower and upper temperature thresholds, Kerns discloses this. If the temperature of Kern's catalytic converter is not within its thresholds, catalyst error e is set to zero and the total error value is based solely on the NOx trap. Ex. 1008, 11:30–37, Fig. 7 (steps 742 and 744).

f. Conclusion

Accordingly, for the foregoing reasons and based on this preliminary record, we determine that Petitioner has established a reasonable likelihood of prevailing on its assertion that claim 1 would have been anticipated by Kerns.

PETITIONER'S EXHIBIT 1002
US PATENT NO. 6,561,166

3. Dependent Claims 2–5

Claims 2–5 depend, directly or indirectly, from claim 1. Ex. 1001, 6:29–41. The Petition maps these challenged dependent claims to Kerns. Pet. 81–85. Patent Owner does not challenge separately the arguments and evidence presented for the dependent claims. *See generally* Prelim. Resp. Based on our review of the current record before us, we determine that the information presented in the Petition establishes that there is a reasonable likelihood that Petitioner would prevail in challenging claims 2–5 as being anticipated by Kerns.

III. CONCLUSION

For the foregoing reasons, we determine that the information presented establishes a reasonable likelihood that Petitioner would prevail in showing that at least one of claims 1–5 of the '166 patent is unpatentable.

Our determination in this Decision is not a final determination on either the patentability of any challenged claim or the construction of any claim term and, thus, leaves undecided any remaining fact issues necessary to determine whether sufficient evidence supports Petitioner's contentions by a preponderance of the evidence in the final written decision. *See Trivascular, Inc. v. Samuels*, 812 F.3d 1056, 1068 (Fed. Cir. 2016) (noting that "there is a significant difference between a petitioner's burden to establish a 'reasonable likelihood of success' at institution, and actually proving invalidity by a preponderance of the evidence at trial").

PETITIONER'S EXHIBIT 1002
US PATENT NO. 6,561,166

IV. ORDER

Accordingly, it is:

ORDERED that pursuant to 35 U.S.C. § 314(a), an *inter partes* review of claims 1–5 of the '166 patent is instituted with respect to all grounds set forth in the Petition; and

FURTHER ORDERED that, pursuant to 35 U.S.C. § 314(c) and 37 C.F.R. § 42.4, notice is hereby given of the institution of a trial, which commences on the entry date of this decision.

PETITIONER'S EXHIBIT 1002
US PATENT NO. 6,561,166

IPR2020-00452
Patent 6,561,166 B2

For PETITIONER:

Michael D. Specht
Jason A. Fitzsimmons
Danny E. Yonan
Kyle E. Conklin
John Higgins
STERNE, KESSLER, GOLDSTEIN & FOX P.L.L.C.
mspecht-PTAB@sternekessler.com
jfitzsimmons-PTAB@sternekessler.com
dyonan-PTAB@sternekessler.com
kconklin-PTAB@sternekessler.com
jhiggins-PTAB@sternekessler.com

For PATENT OWNER:

Timothy Devlin
DEVLIN LAW FIRM LLC
TD-PTAB@devlinlawfirm.com

PETITIONER'S EXHIBIT 1002
US PATENT NO. 6,561,166

CODE SHEET FOR CONTINUING DATA

Line	Code	Serial No.	Filing Date	Status	Document No.	Issue Date
104	18	60/211,085	6/13/00			
105						
106						
107						
108						
109						
110						
111						
112						
113						
114						
115						
116						
117						

Condition and Status Codes for Continuing Data

CONDITION CODE:

71	Continuation of application No.
81	which is a continuation of application No.
91	and a continuation of application No.
72	Continuation-in-part of application No.
82	which is a continuation-in-part of application No.
75	and a continuation-in-part of application No.
74	Division of application No.
84	which is a division of application No.
76	and a division of application No.
86	, said application No.
89	Application No.
90	and application No.
92	each
65	filed as application No.
66	Substitute for application No.
68	Provisional application No.

STATUS CODE

01	Patent No.
03	abandoned
04	SIR No.

NOTE I: When the codes 86 and 92 are used, they must be followed by 81, 82 or 84 – conditions beginning with "which is"

NOTE II: Codes 71, 72 and 74 may be used only on the first line; one of them must be used on the first line in regular continuing data. 66 or 68 may be used on the first line in Substitute or Provisional cases. Remember, however, that if there is a Provisional and other continuing data, the Provisional is always listed last.

PETITIONER'S EXHIBIT 1002
US PATENT NO. 6,561,166

PATENT APPLICATION FEE DETERMINATION RECORD
Effective October 1, 2000

Application or Docket Number: 10541/388-1

CLAIMS AS FILED - PART I

	(Column 1)	(Column 2)
TOTAL CLAIMS	24	
FOR	NUMBER FILED	NUMBER EXTRA
TOTAL CHARGEABLE CLAIMS	24 minus 20=	* 4
INDEPENDENT CLAIMS	3 minus 3 =	* 0
MULTIPLE DEPENDENT CLAIM PRESENT		☐

* If the difference in column 1 is less than zero, enter "0" in column 2

SMALL ENTITY TYPE ☐		OR	OTHER THAN SMALL ENTITY	
RATE	FEE		RATE	FEE
BASIC FEE	355.00	OR	BASIC FEE	710.00
X$ 9=		OR	X$18=	72.00
X40=		OR	X80=	
+135=		OR	+270=	
TOTAL		OR	TOTAL	782.00

CLAIMS AS AMENDED - PART II

AMENDMENT A

	(Column 1) CLAIMS REMAINING AFTER AMENDMENT		(Column 2) HIGHEST NUMBER PREVIOUSLY PAID FOR	(Column 3) PRESENT EXTRA
Total	* 22	Minus	** 24	=
Independent	* 3	Minus	*** 3	=
FIRST PRESENTATION OF MULTIPLE DEPENDENT CLAIM				☒

SMALL ENTITY		OR	OTHER THAN SMALL ENTITY	
RATE	ADDITIONAL FEE		RATE	ADDITIONAL FEE
X$ 9=		OR	X$18=	
X40=		OR	X80=	
+135=		OR	+270=	
TOTAL ADDIT. FEE		OR	TOTAL ADDIT. FEE	

AMENDMENT B

	(Column 1) CLAIMS REMAINING AFTER AMENDMENT		(Column 2) HIGHEST NUMBER PREVIOUSLY PAID FOR	(Column 3) PRESENT EXTRA
Total	* 11	Minus	** 22	=
Independent	* 1	Minus	*** 3	=
FIRST PRESENTATION OF MULTIPLE DEPENDENT CLAIM				☐

RATE	ADDITIONAL FEE		RATE	ADDITIONAL FEE
X$ 9=		OR	X$18=	
X40=		OR	X80=	
+135=		OR	+270=	
TOTAL ADDIT. FEE		OR	TOTAL ADDIT. FEE	

AMENDMENT C

	(Column 1) CLAIMS REMAINING AFTER AMENDMENT		(Column 2) HIGHEST NUMBER PREVIOUSLY PAID FOR	(Column 3) PRESENT EXTRA
Total	*	Minus	**	=
Independent	*	Minus	***	=
FIRST PRESENTATION OF MULTIPLE DEPENDENT CLAIM				☐

RATE	ADDITIONAL FEE		RATE	ADDITIONAL FEE
X$ 9=		OR	X$18=	
X40=		OR	X80=	
+135=		OR	+270=	
TOTAL ADDIT. FEE		OR	TOTAL ADDIT. FEE	

* If the entry in column 1 is less than the entry in column 2, write "0" in column 3.
** If the "Highest Number Previously Paid For" IN THIS SPACE is less than 20, enter "20."
***If the "Highest Number Previously Paid For" IN THIS SPACE is less than 3, enter "3."
The "Highest Number Previously Paid For" (Total or Independent) is the highest number found in the appropriate box in column 1.

PETITIONER'S EXHIBIT 1002
US PATENT NO. 6,561,166

CLAIMS ONLY

SERIAL NO. 09861983 | FILING DATE 5/16/01

APPLICANT(S)

CLAIMS

	AS FILED		AFTER 1st AMENDMENT		AFTER 2nd AMENDMENT	
	IND.	DEP.	IND.	DEP.	IND.	DEP.
1	/					
2		/				
3		/				
4		/				
5		/				
6		/				
7		/				
8		/				
9		/				
10		/				
11		/				
12	/					
13		/				
14		/				
15		/				
16		/				
17		/				
18		/				
19		/				
20		/				
21		/				
22		/				
23		/				
24	/					
25						
26						
27						
28						
29						
30						
31						
32						
33						
34						
35						
36						
37						
38						
39						
40						
41						
42						
43						
44						
45						
46						
47						
48						
49						
50						
TOTAL IND.	3	←		←		←
TOTAL DEP.	21					
TOTAL CLAIMS	24					

	*		*		*	
	IND.	DEP.	IND.	DEP.	IND.	DEP.
51						
52						
53						
54						
55						
56						
57						
58						
59						
60						
61						
62						
63						
64						
65						
66						
67						
68						
69						
70						
71						
72						
73						
74						
75						
76						
77						
78						
79						
80						
81						
82						
83						
84						
85						
86						
87						
88						
89						
90						
91						
92						
93						
94						
95						
96						
97						
98						
99						
100						
TOTAL IND.		←		←		←
TOTAL DEP.						
TOTAL CLAIMS						

* *MAY BE USED FOR ADDITIONAL CLAIMS OR ADMENDMENTS*

FORM PTO-2022 (1-98)

U.S.DEPARTMENT OF COMMERCE
Patent and Trademark Office

*U.S. GPO: 1998-443-593/89152

Derwent Innovation

Derwent Innovation Patent Export, 2022-09-19 13:50:17 +0000

Search results for: PNS=(US6561166);
Collections searched: DWPI; ARIPO grant; Argentina UM; Argentina app; Armenia grant; Australia UM; Australia app; Australia grant; Austria UM; Austria app; Austria grant; Belarus UM; Belarus grant; Belgium app; Belgium grant; Brazil UM; Brazil app; Brazil grant; Bulgaria UM; Bulgaria app; Bulgaria grant; Canada app; Canada grant; China, Mainland UM; China, Mainland app; China, Mainland grant; Colombia app; Costa Rica UM; Costa Rica app; Croatia UM; Croatia app; Croatia grant; Cuba app; Cuba grant; Czech Republic UM; Czech Republic app; Czech Republic grant; Czechoslovakia grant; Denmark UM; Denmark app; Denmark grant; Estonia UM; Estonia app; Estonia grant; Eurasian (EAPO) grant; Europe (EP) app; Europe (EP) grant; Finland app; Finland grant; France app; France grant; Georgia grant; German Democratic Republic app; German Democratic Republic grant; Germany UM; Germany app; Germany grant; Greece app; Greece grant; Gulf Cooperation Council grant; Hong Kong UM; Hong Kong app; Hong Kong grant; Hungary grant; Iceland grant; India app; India grant; Indonesia UM; Indonesia app; Ireland UM; Ireland app; Ireland grant; Israel grant; Italy grant; Italy grant; Italy grant; Italy grant; Japan UM; Japan app; Japan grant; Korea UM; Korea app; Korea grant; Latvia grant; Lithuania grant; Luxembourgh app; Luxembourgh grant; Malaysia app; Malaysia grant; Mexico app; Mexico grant; Moldova UM; Moldova grant; Monaco grant; Mongolia UM; Mongolia grant; Morocco app; Morocco grant; Netherlands app; Netherlands grant; New Zealand grant; Norway app; Norway grant; OAPI grant; PCT (WO) app; Philippines UM; Philippines app; Philippines grant; Poland UM; Poland grant; Portugal UM; Portugal app; Portugal grant; Romania UM; Romania app; Romania granted; Russia UM; Russia app; Russia grant; Serbia UM; Serbia app; Serbia grant; Singapore app; Singapore grant; Slovakia UM; Slovakia app; Slovakia grant; Slovenia UM; Slovenia grant; South Africa app; Spain UM; Spain app; Spain grant; Sweden app; Sweden grant; Switzerland app; Switzerland grant; Taiwan UM; Taiwan appl; Taiwan grant; Thailand UM; Thailand app; Thailand grant; Tunisia app; Turkey UM; Turkey app; Turkey grant; UK app; UK grant; USSR grant; Ukraine UM; Ukraine grant; United States app; United States grant; Uruguay app; Vietnam UM; Vietnam app; Vietnam grant; Other

Table of Contents

1. US6561166B2 Purge fuel canister measurement method and system

PETITIONER'S EXHIBIT 1002
US PATENT NO. 6,561,166

Family 1/1

1 record(s) per family

Record 1/1 US6561166B2 Purge fuel canister measurement method and system

Title: Purge fuel canister measurement method and system

Title - DWPI: Controlling direct injection engine involves measuring temperature of catalyst before and after fuel vapor combustion, and adjusting fuel vapor flow rate when it is within given temperature range

Priority Number: US2000211085P

Priority Date: 2000-06-13

Application Number: US2001861983A

Application Date: 2001-05-16

Publication Date: 2003-05-13

IPC Class Table:

IPC	Section	Class	Subclass	Class Group	Subgroup
F02B001700	F	F02	F02B	F02B0017	F02B001700
F02B003108	F	F02	F02B	F02B0031	F02B003108
F02D000904	F	F02	F02D	F02D0009	F02D000904
F02D004100	F	F02	F02D	F02D0041	F02D004100
F02D004102	F	F02	F02D	F02D0041	F02D004102
F02D004104	F	F02	F02D	F02D0041	F02D004104
F02D004130	F	F02	F02D	F02D0041	F02D004130
F02D004134	F	F02	F02D	F02D0041	F02D004134
F02D004300	F	F02	F02D	F02D0043	F02D004300
F02M002507	F	F02	F02M	F02M0025	F02M002507
F02M002508	F	F02	F02M	F02M0025	F02M002508
F02B003100	F	F02	F02B	F02B0031	F02B003100
F02B007512	F	F02	F02B	F02B0075	F02B007512

IPC Class Table - DWPI:

PETITIONER'S EXHIBIT 1002
US PATENT NO. 6,561,166

IPC - DWPI	Section - DWPI	Class - DWPI	Subclass - DWPI	Class Group - DWPI	Subgroup - DWPI
F02D003500 (IPC 1-7)	F	F02	F02D	F02D0035	F02D003500 (IPC 1-7)
F02D004104 (IPC 1-7)	F	F02	F02D	F02D0041	F02D004104 (IPC 1-7)
F02D004138 (IPC 1-7)	F	F02	F02D	F02D0041	F02D004138 (IPC 1-7)
F02M003302 (IPC 1-7)	F	F02	F02M	F02M0033	F02M003302 (IPC 1-7)
F02M003304 (IPC 1-7)	F	F02	F02M	F02M0033	F02M003304 (IPC 1-7)
F02D004134 (IPC 1-7)	F	F02	F02D	F02D0041	F02D004134 (IPC 1-7)
F02D004300 (IPC 1-7)	F	F02	F02D	F02D0043	F02D004300 (IPC 1-7)
F02M002508 (IPC 1-7)	F	F02	F02M	F02M0025	F02M002508 (IPC 1-7)
F02B001700	F	F02	F02B	F02B0017	F02B001700
F02B003108	F	F02	F02B	F02B0031	F02B003108
F02D004100	F	F02	F02D	F02D0041	F02D004100
F02D004102	F	F02	F02D	F02D0041	F02D004102
F02D004104	F	F02	F02D	F02D0041	F02D004104
F02D004130	F	F02	F02D	F02D0041	F02D004130
F02D004134	F	F02	F02D	F02D0041	F02D004134
F02D004300	F	F02	F02D	F02D0043	F02D004300
F02D000904	F	F02	F02D	F02D0009	F02D000904
F02M002507	F	F02	F02M	F02M0025	F02M002507
F02M002508	F	F02	F02M	F02M0025	F02M002508
F02B003100	F	F02	F02B	F02B0031	F02B003100
F02B007512	F	F02	F02B	F02B0075	F02B007512

Assignee/Applicant: Visteon Global Technologies Inc.,Dearborn,MI

JP F Terms:

JP FI Codes:

PETITIONER'S EXHIBIT 1002
US PATENT NO. 6,561,166

Assignee - Original: Visteon Global Technologies Inc.

Any CPC Table:

Type	Invention	Additional	Version	Office
Current	**F02M 25/08**	F02B 2031/006	20130101	EP; US
Current	F02B 17/005	F02B 2075/125	20130101	EP; US
Current	F02B 31/085	F02D 41/0047	20130101	EP; US
Current	F02D 9/04	F02D 41/1454	20130101	EP; US
Current	F02D 41/0032	F02D 2041/0015	20130101	EP; US
Current	F02D 41/0035	F02D 2041/389	20130101	EP; US
Current	F02D 41/0235	F02D 2200/0802	20130101	EP; US
Current	F02D 41/3029	Y02T 10/12	20130101	EP; US
Current	F02D 41/3076		20130101	EP; US
Current	F02M 26/01	F02M 26/15	20160201	EP; US
Original	**F02M 25/08**	F02B 2031/006	20130101	US
Original	F02B 17/005	F02B 2075/125	20130101	US
Original	F02B 31/085	F02D 41/0047	20130101	US
Original	F02D 9/04	F02D 41/1454	20130101	US
Original	F02D 41/0032	F02D 2041/0015	20130101	US
Original	F02D 41/0035	F02D 2041/389	20130101	US
Original	F02D 41/0235	F02D 2200/0802	20130101	US
Original	F02D 41/3029	Y02T 10/12	20130101	US
Original	F02D 41/3076		20130101	US
Original	F02M 26/01	F02M 26/15	20160201	US

ECLA: F02M002508 | F02B001700D | F02B003108E | F02D000904 | F02D004100F4B | F02D004100F4B2 | F02D004102C4 | F02D004130C2B2 | F02D004130C6 | F02M002507R | R02B003100C | R02B007512D | R02D004100D8 | R02D004138D | R02D02000802 | R02D004100F6 | R02D004114D3H | R02M002507P2C

Abstract:

An engine controller system for a direct injection spark ignited internal combustion engine that is capable of operating a stratified mode where fuel is injected during a compression stroke of the engine and a homogeneous mode where fuels is injected during an intake stroke of the engine. The engine controller monitors adjusts the flow rate of the evaporated fuel vapors as a function of the catalyst temperature and the fuel level in the evaporated fuel vapors. The engine controller determines the fuel level in the evaporated fuel vapors as a function of the exhaust gas oxygen senor output.

Language of Publication: EN

INPADOC Legal Status Table:

PETITIONER'S EXHIBIT 1002
US PATENT NO. 6,561,166

Gazette Date	Code	INPADOC Legal Status Impact
2020-04-07	IPR	-
Description: AIA TRIAL PROCEEDING FILED BEFORE THE PATENT AND APPEAL BOARD: INTER PARTES REVIEW TRIAL NO: IPR2020-00452 2020-02-14		
2018-06-19	IPR	-
Description: AIA TRIAL PROCEEDING FILED BEFORE THE PATENT AND APPEAL BOARD: INTER PARTES REVIEW TRIAL NO: IPR2018-01075 2018-05-14		
2017-08-31	AS	-
Description: ASSIGNMENT MICHIGAN MOTOR TECHNOLOGIES LLC, MICHIGAN ASSIGNMENT OF ASSIGNORS INTEREST; ASSIGNOR:MOBILE AUTOMOTIVE TECHNOLOGIES, LLC; REEL/FRAME:043463/0881 2017-08-28		
2017-08-31	AS	-
Description: ASSIGNMENT MOBILE AUTOMOTIVE TECHNOLOGIES, LLC, ALABAMA ASSIGNMENT OF ASSIGNORS INTEREST; ASSIGNOR:GODO KAISHA IP BRIDGE; REEL/FRAME:043843/0821 2016-11-02		
2017-08-31	AS	-
Description: ASSIGNMENT MOBILE AUTOMOTIVE TECHNOLOGIES, LLC, ALABAMA ASSIGNMENT OF ASSIGNORS INTEREST; ASSIGNOR:GODO KAISHA IP BRIDGE; REEL/FRAME:043463/0223 2016-09-02		
2015-04-16	AS	-
Description: ASSIGNMENT GODO KAISHA IP BRIDGE 1, JAPAN ASSIGNMENT OF ASSIGNORS INTEREST; ASSIGNOR:VISTEON GLOBAL TECHNOLOGIES INC.; REEL/FRAME:035421/0739 2015-02-13		
2015-02-02	AS	-
Description: ASSIGNMENT VISTEON CORPORATION, MICHIGAN RELEASE OF SECURITY INTEREST IN SPECIFIED PATENTS; ASSIGNOR:CITIBANK, N.A.; REEL/FRAME:034874/0025 2015-02-02		
2015-02-02	AS	-
Description: ASSIGNMENT VISTEON GLOBAL TECHNOLOGIES, MICHIGAN RELEASE OF SECURITY INTEREST IN SPECIFIED PATENTS; ASSIGNOR:CITIBANK, N.A.; REEL/FRAME:034874/0025 2015-02-02		
2014-11-05	FPAY	+
Description: FEE PAYMENT FEE PAYMENT YEAR 12		
2014-06-09	AS	-
Description: ASSIGNMENT VC AVIATION SERVICES, LLC, MICHIGAN RELEASE OF SECURITY INTEREST IN INTELLECTUAL PROPERTY; ASSIGNOR:MORGAN STANLEY SENIOR FUNDING, INC.; REEL/FRAME:033107/0717		

PETITIONER'S EXHIBIT 1002
US PATENT NO. 6,561,166

2014-04-09		
2014-06-09	AS	-
Description: ASSIGNMENT VISTEON CORPORATION, MICHIGAN RELEASE OF SECURITY INTEREST IN INTELLECTUAL PROPERTY; ASSIGNOR:MORGAN STANLEY SENIOR FUNDING, INC.; REEL/FRAME:033107/0717 2014-04-09		
2014-06-09	AS	-
Description: ASSIGNMENT VISTEON ELECTRONICS CORPORATION, MICHIGAN RELEASE OF SECURITY INTEREST IN INTELLECTUAL PROPERTY; ASSIGNOR:MORGAN STANLEY SENIOR FUNDING, INC.; REEL/FRAME:033107/0717 2014-04-09		
2014-06-09	AS	-
Description: ASSIGNMENT VISTEON EUROPEAN HOLDINGS, INC., MICHIGAN RELEASE OF SECURITY INTEREST IN INTELLECTUAL PROPERTY; ASSIGNOR:MORGAN STANLEY SENIOR FUNDING, INC.; REEL/FRAME:033107/0717 2014-04-09		
2014-06-09	AS	-
Description: ASSIGNMENT VISTEON GLOBAL TECHNOLOGIES, INC., MICHIGAN RELEASE OF SECURITY INTEREST IN INTELLECTUAL PROPERTY; ASSIGNOR:MORGAN STANLEY SENIOR FUNDING, INC.; REEL/FRAME:033107/0717 2014-04-09		
2014-06-09	AS	-
Description: ASSIGNMENT VISTEON GLOBAL TREASURY, INC., MICHIGAN RELEASE OF SECURITY INTEREST IN INTELLECTUAL PROPERTY; ASSIGNOR:MORGAN STANLEY SENIOR FUNDING, INC.; REEL/FRAME:033107/0717 2014-04-09		
2014-06-09	AS	-
Description: ASSIGNMENT VISTEON INTERNATIONAL BUSINESS DEVELOPMENT, INC., RELEASE OF SECURITY INTEREST IN INTELLECTUAL PROPERTY; ASSIGNOR:MORGAN STANLEY SENIOR FUNDING, INC.; REEL/FRAME:033107/0717 2014-04-09		
2014-06-09	AS	-
Description: ASSIGNMENT VISTEON INTERNATIONAL HOLDINGS, INC., MICHIGAN RELEASE OF SECURITY INTEREST IN INTELLECTUAL PROPERTY; ASSIGNOR:MORGAN STANLEY SENIOR FUNDING, INC.; REEL/FRAME:033107/0717 2014-04-09		
2014-06-09	AS	-
Description: ASSIGNMENT VISTEON SYSTEMS, LLC, MICHIGAN RELEASE OF SECURITY INTEREST IN INTELLECTUAL PROPERTY; ASSIGNOR:MORGAN STANLEY SENIOR FUNDING, INC.; REEL/FRAME:033107/0717 2014-04-09		

PETITIONER'S EXHIBIT 1002
US PATENT NO. 6,561,166

2014-04-18	AS	-
Description: ASSIGNMENT CITIBANK., N.A., AS ADMINISTRATIVE AGENT, NEW YORK SECURITY INTEREST; ASSIGNORS:VISTEON CORPORATION, AS GRANTOR; VISTEON GLOBAL TECHNOLOGIES, INC., AS GRANTOR; REEL/FRAME:032713/0065 2014-04-09		
2011-04-26	AS	-
Description: ASSIGNMENT VC AVIATION SERVICES, LLC, MICHIGAN RELEASE BY SECURED PARTY AGAINST SECURITY INTEREST IN PATENTS ON REEL 025241 FRAME 0317; ASSIGNOR:MORGAN STANLEY SENIOR FUNDING, INC.; REEL/FRAME:026178/0412 2011-04-06		
2011-04-26	AS	-
Description: ASSIGNMENT VISTEON CORPORATION, MICHIGAN RELEASE BY SECURED PARTY AGAINST SECURITY INTEREST IN PATENTS ON REEL 025241 FRAME 0317; ASSIGNOR:MORGAN STANLEY SENIOR FUNDING, INC.; REEL/FRAME:026178/0412 2011-04-06		
2011-04-26	AS	-
Description: ASSIGNMENT VISTEON ELECTRONICS CORPORATION, MICHIGAN RELEASE BY SECURED PARTY AGAINST SECURITY INTEREST IN PATENTS ON REEL 025241 FRAME 0317; ASSIGNOR:MORGAN STANLEY SENIOR FUNDING, INC.; REEL/FRAME:026178/0412 2011-04-06		
2011-04-26	AS	-
Description: ASSIGNMENT VISTEON EUROPEAN HOLDING, INC., MICHIGAN RELEASE BY SECURED PARTY AGAINST SECURITY INTEREST IN PATENTS ON REEL 025241 FRAME 0317; ASSIGNOR:MORGAN STANLEY SENIOR FUNDING, INC.; REEL/FRAME:026178/0412 2011-04-06		
2011-04-26	AS	-
Description: ASSIGNMENT VISTEON GLOBAL TECHNOLOGIES, INC., MICHIGAN RELEASE BY SECURED PARTY AGAINST SECURITY INTEREST IN PATENTS ON REEL 025241 FRAME 0317; ASSIGNOR:MORGAN STANLEY SENIOR FUNDING, INC.; REEL/FRAME:026178/0412 2011-04-06		
2011-04-26	AS	-
Description: ASSIGNMENT VISTEON GLOBAL TREASURY, INC., MICHIGAN RELEASE BY SECURED PARTY AGAINST SECURITY INTEREST IN PATENTS ON REEL 025241 FRAME 0317; ASSIGNOR:MORGAN STANLEY SENIOR FUNDING, INC.; REEL/FRAME:026178/0412 2011-04-06		
2011-04-26	AS	-
Description: ASSIGNMENT VISTEON INTERNATIONAL BUSINESS DEVELOPMENT, INC., RELEASE BY SECURED PARTY AGAINST SECURITY INTEREST IN PATENTS ON REEL 025241 FRAME 0317; ASSIGNOR:MORGAN STANLEY SENIOR FUNDING, INC.; REEL/FRAME:026178/0412 2011-04-06		
2011-04-26	AS	-
Description: ASSIGNMENT VISTEON INTERNATIONAL HOLDINGS, INC., MICHIGAN RELEASE BY SECURED PARTY		

PETITIONER'S EXHIBIT 1002
US PATENT NO. 6,561,166

AGAINST SECURITY INTEREST IN PATENTS ON REEL 025241 FRAME 0317; ASSIGNOR:MORGAN STANLEY SENIOR FUNDING, INC.; REEL/FRAME:026178/0412 2011-04-06		
2011-04-26	AS	-
Description: ASSIGNMENT VISTEON SYSTEMS, LLC, MICHIGAN RELEASE BY SECURED PARTY AGAINST SECURITY INTEREST IN PATENTS ON REEL 025241 FRAME 0317; ASSIGNOR:MORGAN STANLEY SENIOR FUNDING, INC.; REEL/FRAME:026178/0412 2011-04-06		
2010-10-21	FPAY	+
Description: FEE PAYMENT FEE PAYMENT YEAR 8		
2010-10-19	AS	-
Description: ASSIGNMENT MORGAN STANLEY SENIOR FUNDING, INC., AS AGENT, NEW SECURITY AGREEMENT; ASSIGNORS:VISTEON CORPORATION; VC AVIATION SERVICES, LLC; VISTEON ELECTRONICS CORPORATION; AND OTHERS; REEL/FRAME:025241/0317 2010-10-07		
2010-10-19	AS	-
Description: ASSIGNMENT MORGAN STANLEY SENIOR FUNDING, INC., AS AGENT, NEW SECURITY AGREEMENT (REVOLVER); ASSIGNORS:VISTEON CORPORATION; VC AVIATION SERVICES, LLC; VISTEON ELECTRONICS CORPORATION; AND OTHERS; REEL/FRAME:025238/0298 2010-10-01		
2010-10-07	AS	-
Description: ASSIGNMENT VISTEON GLOBAL TECHNOLOGIES, INC., MICHIGAN RELEASE BY SECURED PARTY AGAINST SECURITY INTEREST IN PATENTS RECORDED AT REEL 022575 FRAME 0186; ASSIGNOR:WILMINGTON TRUST FSB, AS ADMINISTRATIVE AGENT; REEL/FRAME:025105/0201 2010-10-01		
2010-10-06	AS	-
Description: ASSIGNMENT VISTEON GLOBAL TECHNOLOGIES, INC., MICHIGAN RELEASE BY SECURED PARTY AGAINST SECURITY INTEREST IN PATENTS RECORDED AT REEL 022974 FRAME 0057; ASSIGNOR:THE BANK OF NEW YORK MELLON; REEL/FRAME:025095/0711 2010-10-01		
2009-07-17	AS	-
Description: ASSIGNMENT THE BANK OF NEW YORK MELLON, AS ADMINISTRATIVE AGE ASSIGNMENT OF PATENT SECURITY INTEREST; ASSIGNOR:JPMORGAN CHASE BANK, N.A., A NATIONAL BANKING ASSOCIATION; REEL/FRAME:022974/0057 2009-07-15		
2009-04-21	AS	-
Description: ASSIGNMENT WILMINGTON TRUST FSB, AS ADMINISTRATIVE AGENT, MIN ASSIGNMENT OF SECURITY INTEREST IN PATENTS; ASSIGNOR:JPMORGAN CHASE BANK, N.A., AS ADMINISTRATIVE AGENT; REEL/FRAME:022575/0186 2009-04-15		
2009-04-21	AS	-

PETITIONER'S EXHIBIT 1002
US PATENT NO. 6,561,166

Description: ASSIGNMENT WILMINGTON TRUST FSB, AS ADMINISTRATIVE AGENT,MINN ASSIGNMENT OF SECURITY INTEREST IN PATENTS; ASSIGNOR:JPMORGAN CHASE BANK, N.A., AS ADMINISTRATIVE AGENT; REEL/FRAME:022575/0186 2009-04-15		
2009-02-27	AS	-
Description: ASSIGNMENT JPMORGAN CHASE BANK, TEXAS SECURITY INTEREST; ASSIGNOR:VISTEON GLOBAL TECHNOLOGIES, INC.; REEL/FRAME:022368/0001 2006-08-14		
2009-02-27	AS	-
Description: ASSIGNMENT JPMORGAN CHASE BANK,TEXAS SECURITY INTEREST; ASSIGNOR:VISTEON GLOBAL TECHNOLOGIES, INC.; REEL/FRAME:022368/0001 2006-08-14		
2008-02-07	AS	-
Description: ASSIGNMENT JPMORGAN CHASE BANK, N.A., AS ADMINISTRATIVE AGENT SECURITY AGREEMENT; ASSIGNOR:VISTEON GLOBAL TECHNOLOGIES, INC.; REEL/FRAME:020497/0733 2006-06-13		
2006-11-01	FPAY	+
Description: FEE PAYMENT FEE PAYMENT YEAR 4		
2003-04-24	STCF	-
Description: INFORMATION ON STATUS: PATENT GRANT PATENTED CASE		
2001-05-16	AS	-
Description: ASSIGNMENT VISTEON GLOBAL TECHNOLOGIES, INC., MICHIGAN ASSIGNMENT OF ASSIGNORS INTEREST; ASSIGNORS:HALLERON, IAN; DIXON, JON; REEL/FRAME:011838/0682 2001-05-11		

Post-Issuance (US):

Reassignment (US) Table:

Assignee	Assignor	Date Signed	Reel/Frame	Date
MICHIGAN MOTOR TECHNOLOGIES LLC,SYLVAN LAKE,MI,US	MOBILE AUTOMOTIVE TECHNOLOGIES, LLC	2017-08-28	043463/0881	2017-08-31
Conveyance: ASSIGNMENT OF ASSIGNORS INTEREST (SEE DOCUMENT FOR DETAILS).				
Corresponent: TIMOTHY DEVLIN 1306 N. BROOM STREET 1ST FLOOR WILMINGTON, DE 19806				
MOBILE AUTOMOTIVE TECHNOLOGIES	GODO KAISHA IP BRIDGE	2016-11-02	043843/0821	2017-08-31

PETITIONER'S EXHIBIT 1002
US PATENT NO. 6,561,166

LLC,MOBILE,AL,US				
Conveyance: ASSIGNMENT OF ASSIGNORS INTEREST (SEE DOCUMENT FOR DETAILS).				
Corresponent: TIMOTHY DEVLIN 1306 N. BROOM STREET 1ST FLOOR WILMINGTON, DE 19806				
MOBILE AUTOMOTIVE TECHNOLOGIES LLC,MOBILE,AL,US	GODO KAISHA IP BRIDGE	2016-09-02	043463/0223	2017-08-31
Conveyance: ASSIGNMENT OF ASSIGNORS INTEREST (SEE DOCUMENT FOR DETAILS).				
Corresponent: TIMOTHY DEVLIN 1306 N. BROOM STREET 1ST FLOOR WILMINGTON, DE 19806				
GODO KAISHA IP BRIDGE 1,TOKYO,JP	VISTEON GLOBAL TECHNOLOGIES INC.	2015-02-13	035421/0739	2015-04-16
Conveyance: ASSIGNMENT OF ASSIGNORS INTEREST (SEE DOCUMENT FOR DETAILS).				
Corresponent: CPA GLOBAL LIBERATION HOUSE ST HELIER, JE1 1BL JERSEY				
VISTEON CORPORATION,VAN BUREN TOWNSHIP,MI,US	CITIBANK, N.A.	2015-02-02	034874/0025	2015-02-02
VISTEON GLOBAL TECHNOLOGIES,VAN BUREN TOWNSHIP,MI,US	-	-	-	-
Conveyance: RELEASE OF SECURITY INTEREST IN SPECIFIED PATENTS | RELEASE OF SECURITY INTEREST IN SPECIFIED PATENTS				
Corresponent: SKADDEN, ARPS, SLATE, MEAGHER & FLOM LLP FOUR TIMES SQUARE JUSTIN SELLE, LEGAL ASSISTANT NEW YORK, NY 10036 | SKADDEN, ARPS, SLATE, MEAGHER & FLOM LLP FOUR TIMES SQUARE JUSTIN SELLE, LEGAL ASSISTANT NEW YORK, NY 10036				
VISTEON CORPORATION,VAN BUREN TOWNSHIP,MI,US	MORGAN STANLEY SENIOR FUNDING, INC.	2014-04-09	033107/0717	2014-06-09
VC AVIATION SERVICES LLC,VAN BUREN TOWNSHIP,MI,US				
VISTEON ELECTRONICS CORPORATION,VAN BUREN TOWNSHIP,MI,US				
VISTEON GLOBAL TECHNOLOGIES INC.,VAN BUREN TOWNSHIP,MI,US				
VISTEON INTERNATIONAL HOLDINGS INC.,VAN				

PETITIONER'S EXHIBIT 1002
US PATENT NO. 6,561,166

BUREN TOWNSHIP,MI,US				
VISTEON GLOBAL TREASURY INC.,VAN BUREN TOWNSHIP,MI,US				
VISTEON EUROPEAN HOLDINGS INC.,VAN BUREN TOWNSHIP,MI,US				
VISTEON SYSTEMS LLC,VAN BUREN TOWNSHIP,MI,US				
VISTEON INTERNATIONAL BUSINESS DEVELOPMENT INC.,VAN BUREN TOWNSHIP,MI,US				
Conveyance: RELEASE OF SECURITY INTEREST IN INTELLECTUAL PROPERTY | RELEASE OF SECURITY INTEREST IN INTELLECTUAL PROPERTY | RELEASE OF SECURITY INTEREST IN INTELLECTUAL PROPERTY | RELEASE OF SECURITY INTEREST IN INTELLECTUAL PROPERTY | RELEASE OF SECURITY INTEREST IN INTELLECTUAL PROPERTY | RELEASE OF SECURITY INTEREST IN INTELLECTUAL PROPERTY | RELEASE OF SECURITY INTEREST IN INTELLECTUAL PROPERTY | RELEASE OF SECURITY INTEREST IN INTELLECTUAL PROPERTY | RELEASE OF SECURITY INTEREST IN INTELLECTUAL PROPERTY				
Corresponent: SKADDEN ARPS SLATE MEAGHER & FLOM LLP FOUR TIMES SQUARE ATTN: REBECCA RODAL, ESQ. NEW YORK, NY 10036 | SKADDEN ARPS SLATE MEAGHER & FLOM LLP FOUR TIMES SQUARE ATTN: REBECCA RODAL, ESQ. NEW YORK, NY 10036 | SKADDEN ARPS SLATE MEAGHER & FLOM LLP FOUR TIMES SQUARE ATTN: REBECCA RODAL, ESQ. NEW YORK, NY 10036 | SKADDEN ARPS SLATE MEAGHER & FLOM LLP FOUR TIMES SQUARE ATTN: REBECCA RODAL, ESQ. NEW YORK, NY 10036 | SKADDEN ARPS SLATE MEAGHER & FLOM LLP FOUR TIMES SQUARE ATTN: REBECCA RODAL, ESQ. NEW YORK, NY 10036 | SKADDEN ARPS SLATE MEAGHER & FLOM LLP FOUR TIMES SQUARE ATTN: REBECCA RODAL, ESQ. NEW YORK, NY 10036 | SKADDEN ARPS SLATE MEAGHER & FLOM LLP FOUR TIMES SQUARE ATTN: REBECCA RODAL, ESQ. NEW YORK, NY 10036 | SKADDEN ARPS SLATE MEAGHER & FLOM LLP FOUR TIMES SQUARE ATTN: REBECCA RODAL, ESQ. NEW YORK, NY 10036				
CITIBANK. N.A. AS ADMINISTRATIVE AGENT,GETZVILLE,NY,US	VISTEON CORPORATION, AS GRANTOR	2014-04-09	032713/0065	2014-04-18
	VISTEON GLOBAL TECHNOLOGIES, INC., AS GRANTOR	2014-04-09	-	-
Conveyance: SECURITY INTEREST (SEE DOCUMENT FOR DETAILS).				
Corresponent: KEN TAN, LEGAL ASSISTANT 80 PINE STREET C/O CAHILL GORDON & REINDEL LLP NEW YORK, NY 10005				
VISTEON CORPORATION,VAN BUREN TOWNSHIP,MI,US	MORGAN STANLEY SENIOR FUNDING, INC.	2011-04-06	026178/0412	2011-04-26
VC AVIATION SERVICES				

PETITIONER'S EXHIBIT 1002
US PATENT NO. 6,561,166

LLC,VAN BUREN TOWNSHIP,MI,US	
VISTEON ELECTRONICS CORPORATION,VAN BUREN TOWNSHIP,MI,US	
VISTEON GLOBAL TECHNOLOGIES INC.,VAN BUREN TOWNSHIP,MI,US	
VISTEON INTERNATIONAL HOLDINGS INC.,VAN BUREN TOWNSHIP,MI,US	
VISTEON GLOBAL TREASURY INC.,VAN BUREN TOWNSHIP,MI,US	
VISTEON EUROPEAN HOLDING INC.,VAN BUREN TOWNSHIP,MI,US	
VISTEON SYSTEMS LLC,VAN BUREN TOWNSHIP,MI,US	
VISTEON INTERNATIONAL BUSINESS DEVELOPMENT INC.,VAN BUREN TOWNSHIP,MI,US	

Conveyance: RELEASE BY SECURED PARTY AGAINST SECURITY INTEREST IN PATENTS ON REEL 025241 FRAME 0317 | RELEASE BY SECURED PARTY AGAINST SECURITY INTEREST IN PATENTS ON REEL 025241 FRAME 0317 | RELEASE BY SECURED PARTY AGAINST SECURITY INTEREST IN PATENTS ON REEL 025241 FRAME 0317 | RELEASE BY SECURED PARTY AGAINST SECURITY INTEREST IN PATENTS ON REEL 025241 FRAME 0317 | RELEASE BY SECURED PARTY AGAINST SECURITY INTEREST IN PATENTS ON REEL 025241 FRAME 0317 | RELEASE BY SECURED PARTY AGAINST SECURITY INTEREST IN PATENTS ON REEL 025241 FRAME 0317 | RELEASE BY SECURED PARTY AGAINST SECURITY INTEREST IN PATENTS ON REEL 025241 FRAME 0317 | RELEASE BY SECURED PARTY AGAINST SECURITY INTEREST IN PATENTS ON REEL 025241 FRAME 0317

Corresponent: KIRKLAND & ELLIS LLP 300 NORTH LASALLE STREET C/O DONNA GASIOROWSKI, SR. LEGAL ASST. CHICAGO, IL 60654 | KIRKLAND & ELLIS LLP 300 NORTH LASALLE STREET C/O DONNA GASIOROWSKI, SR. LEGAL ASST. CHICAGO, IL 60654 | KIRKLAND & ELLIS LLP 300 NORTH LASALLE STREET C/O DONNA GASIOROWSKI, SR. LEGAL ASST. CHICAGO, IL 60654 | KIRKLAND & ELLIS LLP 300 NORTH LASALLE STREET C/O DONNA GASIOROWSKI, SR. LEGAL ASST. CHICAGO, IL 60654 | KIRKLAND & ELLIS LLP 300 NORTH LASALLE STREET C/O DONNA GASIOROWSKI, SR. LEGAL ASST. CHICAGO, IL 60654 | KIRKLAND & ELLIS LLP 300 NORTH LASALLE STREET C/O DONNA GASIOROWSKI, SR. LEGAL ASST. CHICAGO, IL 60654 | KIRKLAND & ELLIS LLP 300 NORTH LASALLE STREET C/O DONNA GASIOROWSKI, SR. LEGAL ASST. CHICAGO, IL 60654 | KIRKLAND & ELLIS LLP 300 NORTH LASALLE STREET C/O DONNA GASIOROWSKI, SR. LEGAL ASST. CHICAGO, IL 60654

MORGAN STANLEY SENIOR FUNDING INC. AS AGENT,BROOKLYN,NY,US	VISTEON CORPORATION	2010-10-07	025241/0317	2010-10-19
	VC AVIATION SERVICES,	2010-10-07		

PETITIONER'S EXHIBIT 1002
US PATENT NO. 6,561,166

	LLC			
	VISTEON ELECTRONICS CORPORATION	2010-10-07		
	VISTEON GLOBAL TECHNOLOGIES, INC.	2010-10-07		
	VISTEON INTERNATIONAL HOLDINGS, INC.	2010-10-07		
	VISTEON GLOBAL TREASURY, INC.	2010-10-07		
	VISTEON EUROPEAN HOLDING, INC.	2010-10-07		
	VISTEON SYSTEMS, LLC	2010-10-07		
	VISTEON INTERNATIONAL BUSINESS DEVELOPMENT, INC.	2010-10-07		
Conveyance: SECURITY AGREEMENT				
Corresponent: CAROL FRASER PAUL, HASTINGS, JANOFSKY & WALKER LLP 600 PEACHTREE STREET, NE SUITE 2400 ATLANTA, GA 30308				
MORGAN STANLEY SENIOR FUNDING INC. AS AGENT,BROOKLYN,NY,US	VISTEON CORPORATION	2010-10-01	025238/0298	2010-10-19
	VC AVIATION SERVICES, LLC	2010-10-01		
	VISTEON ELECTRONICS CORPORATION	2010-10-01		
	VISTEON GLOBAL TECHNOLOGIES, INC.	2010-10-01		
	VISTEON INTERNATIONAL HOLDINGS, INC.	2010-10-01		
	VISTEON GLOBAL TREASURY, INC.	2010-10-01		
	VISTEON EUROPEAN HOLDINGS, INC.	2010-10-01		
	VISTEON SYSTEMS, LLC	2010-10-01		
	VISTEON INTERNATIONAL BUSINESS DEVELOPMENT, INC.	2010-10-01		
Conveyance: SECURITY AGREEMENT (REVOLVER)				
Corresponent: CAROL FRASER PAUL, HASTINGS, JANOFSKY & WALKER LLP 600 PEACHTREE STREET, NE, SUITE				

PETITIONER'S EXHIBIT 1002
US PATENT NO. 6,561,166

2400 ATLANTA, GEORGIA 30308				
VISTEON GLOBAL TECHNOLOGIES INC.,VAN BUREN TOWNSHIP,MI,US	WILMINGTON TRUST FSB, AS ADMINISTRATIVE AGENT	2010-10-01	025105/0201	2010-10-07
Conveyance: RELEASE BY SECURED PARTY AGAINST SECURITY INTEREST IN PATENTS RECORDED AT REEL 022575 FRAME 0186				
Corresponent: KIRKLAND & ELLIS LLP 300 NORTH LASALLE STREET C/O DONNA GASIOROWSKI, SR. LEGAL ASST. CHICAGO, IL 60654				
VISTEON GLOBAL TECHNOLOGIES INC.,VAN BUREN TOWNSHIP,MI,US	THE BANK OF NEW YORK MELLON	2010-10-01	025095/0711	2010-10-06
Conveyance: RELEASE BY SECURED PARTY AGAINST SECURITY INTEREST IN PATENTS RECORDED AT REEL 022974 FRAME 0057				
Corresponent: KIRKLAND & ELLIS LLP 300 NORTH LASALLE STREET C/O DONNA GASIOROWSKI, SR. LEGAL ASST. CHICAGO, IL 60654				
THE BANK OF NEW YORK MELLON AS ADMINISTRATIVE AGENT,IRVING,TX,US	JPMORGAN CHASE BANK, N.A., A NATIONAL BANKING ASSOCIATION	2009-07-15	022974/0057	2009-07-17
Conveyance: ASSIGNMENT OF PATENT SECURITY INTEREST				
Corresponent: STEPHEN S. LAPLANTE 150 WEST JEFFERSON SUITE 2500 DETROIT, MI 48226				
WILMINGTON TRUST FSB AS ADMINISTRATIVE AGENT,MINNEAPOLIS,MN, US	JPMORGAN CHASE BANK, N.A., AS ADMINISTRATIVE AGENT	2009-04-15	022575/0186	2009-04-21
Conveyance: ASSIGNMENT OF SECURITY INTEREST IN PATENTS				
Corresponent: ASHLEY B. SCIBELLI ONE FEDERAL STREET BINGHAM MCCUTCHEN LLP BOSTON, MA 02110				
JPMORGAN CHASE BANK,HOUSTON,TX,US	VISTEON GLOBAL TECHNOLOGIES, INC.	2006-08-14	022368/0001	2009-02-27
Conveyance: SECURITY INTEREST (SEE DOCUMENT FOR DETAILS).				
Corresponent: JENNIFER WARD, ESQ. SKADDEN, ARPS, SLATE, MEAGHER & FLOM LLP FOUR TIMES SQUARE NEW YORK, NY 10036				
JPMORGAN CHASE BANK N.A. AS ADMINISTRATIVE AGENT,HOUSTON,TX,US	VISTEON GLOBAL TECHNOLOGIES, INC.	2006-06-13	020497/0733	2008-02-07

PETITIONER'S EXHIBIT 1002
US PATENT NO. 6,561,166

Conveyance: SECURITY AGREEMENT				
Corresponent: MINDY M. LOK, ESQ. SIMPSON THACHER & BARTLETT LLP 425 LEXINGTON AVENUE NEW YORK, NY 10017				
VISTEON GLOBAL TECHNOLOGIES INC.,DETROIT,MI,US	HALLERON, IAN	2001-05-11	011838/0682	2001-05-16
	DIXON, JON	2001-05-11	-	-
Conveyance: ASSIGNMENT OF ASSIGNORS INTEREST (SEE DOCUMENT FOR DETAILS).				
Corresponent: BRINKS HOFER GILSON & LIONE P.O. BOX 10395 CHICAGO, IL 60610				

Maintenance Status (US):

Litigation (US): 2022-07-29 2022 Michigan Motor Technologies LLC Mercedes-Benz USA, LLC N.D. Illinois 1:22cv03957 | 2019-02-18 2019 Michigan Motor Technologies LLC Volkswagen Aktiengesellschaft E.D. Michigan 2:19cv10485 | 2017-09-01 2017 Michigan Motor Technologies LLC Hyundai Motor Company Hyundai Motor Group Hyundai America Technical Center, Inc. E.D. Michigan 2:17cv12901

Opposition (EP):

License (EP):

EPO Procedural Status:

Front Page Drawing:

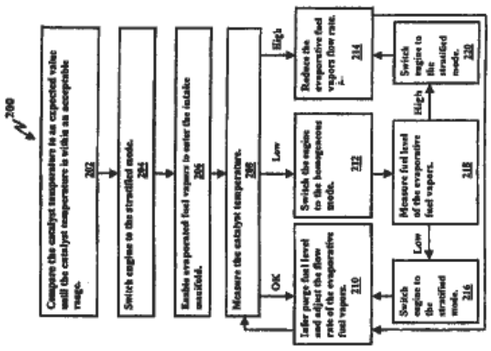

Priority Number - DWPI: US2000211085P | US2001861983A
Priority Date - DWPI: 2000-06-13 | 2001-05-16
Assignee - Current US: MICHIGAN MOTOR TECHNOLOGIES LLC

Clarivate™

Copyright 2007-2022 CLARIVATE

PETITIONER'S EXHIBIT 1002
US PATENT NO. 6,561,166

United States Patent and Trademark Office

Office of the Commissioner for Patents

PURGE FUEL CANISTER MEASUREMENT METHOD AND SYSTEM

PATENT #	APPLICATION #	FILING DATE	ISSUE DATE
6561166	09861983	05/16/2001	05/13/2003

Payment Window Status

No maintenance fees are due.

WINDOW	STATUS	FEES
11.5 Year	Closed	Paid

Window	First Day to Pay	Surcharge Starts	Last Day to Pay	Status	Fees
3.5 Year	05/13/2006	11/14/2006	05/14/2007	Closed	Paid
7.5 Year	05/13/2010	11/16/2010	05/13/2011	Closed	Paid
11.5 Year	05/13/2014	11/14/2014	05/13/2015	Closed	Paid

Patent Holder Information

Customer # 163393

Entity Status UNDISCOUNTED

Phone Number 3024499010

Address Michigan Motor Tech
c/o Devlin Law Firm LLC
1526 Gilpin Ave.
Wilmington, DE 19806
UNITED STATES

PETITIONER'S EXHIBIT 1002
US PATENT NO. 6,561,166