UNITED STATES PATENT AND TRADEMARK OFFICE

BEFORE THE PATENT TRIAL AND APPEAL BOARD

Mercedes-Benz USA, LLC

Petitioner,

v.

Michigan Motor Technologies, LLC

Patent Owner.

IPR2023-01113

DECLARATION OF GLENN R. BOWER, PH.D., IN SUPPORT OF PETITION FOR *INTER PARTES* REVIEW OF U.S. PATENT NO. 6,561,166

Mail Stop PATENT BOARD
Patent Trial and Appeal Board
United States Patent and Trademark Office
PO Box 1450
Alexandria, Virginia 22313-1450

Submitted Electronically via the Patent Trial and Appeal Board End to End System

TABLE OF CONTENTS

TABLE OF CONTENTS i

I. INTRODUCTION 5

II. SUMMARY OF GROUNDS 6

III. SUMMARY OF OPINIONS 6

IV. MATERIALS CONSIDERED 7

V. QUALIFICATIONS 8

VI. SCOPE OF ASSIGNMENT 11

VII. LEGAL UNDERSTANDING 13

A. Person of Ordinary Skill in the Art 14

B. Claim Construction 14

C. Obviousness 16

VIII. THE ’166 PATENT 17

A. Technology Background 17

1. Overview of Reciprocating Internal Combustion Engines 17

2. DISI Engines Having Two Combustion Modes 18

3. Purging Fuel Vapor 20

B. Level of Ordinary Skill in the Art 21

C. Claims 22

D. Specification 23

E. Prosecution History 30

PETITIONER'S EXHIBIT 1003
US PATENT NO. 6,561,166

IX. CHALLENGED CLAIMS 32

X. CLAIM CONSTRUCTION 33

XI. SUMMARY OF PRIOR ART 34

A. Hepburn 34

B. Kerns 37

C. Kainz 41

D. Takahashi 42

XII. GROUND 1: THE COMBINATION OF HEPBURN AND KERNS RENDERS OBVIOUS CLAIMS 1-3 43

A. Motivation to Combine Hepburn with Kerns 43

B. Claim 1: 46

1. 1[pre] "A method of controlling a direct injection spark ignited internal combustion engine that is capable of operating in a stratified mode where fuel is injected during a compression stroke of the engine and a homogeneous mode where fuels is injected during an intake stroke of the engine, the internal combustion engine having a catalytic converter and an NOx trap, comprising:" 46

2. 1[a] "measuring a first temperature of an NOx trap that is in contact with an exhaust gas exhausted from a combustion chamber while the engine is operating in the stratified mode;" 48

3. 1[b]: "enabling evaporated fuel vapors to enter the combustion chamber at a flow rate while the engine is operating in the stratified mode;" 50

4. 1[c]: "measuring a second temperature of the NOx trap while the engine is operating in the stratified mode; and" 53

5. 1[d]: "adjusting the flow rate of the evaporated fuel vapors as a function of the second temperature when the second temperature

PETITIONER'S EXHIBIT 1003
US PATENT NO. 6,561,166

is within a lower temperature threshold and an upper temperature threshold." 55

C. Claim 2: "The method of claim 1, further comprising: switching the engine to the homogeneous mode when the second temperature is below the lower temperature threshold." 60

D. Claim 3: The method of claim 2, further comprising: measuring a fuel level of the evaporated fuel vapors after the switching the engine to the homogeneous mode. 61

XIII. GROUND 2: THE COMBINATION OF HEPBURN, KERNS, AND KAINZ RENDERS OBVIOUS CLAIMS 4 and 5. 64

A. Motivation to Combine Hepburn, Kerns, and Kainz 64

B. Claim 4: "The method of claim 3, wherein the measuring the fuel level comprises measuring the fuel level via an exhaust gas oxygen sensor." 67

C. Claim 5: "The method of claim 4, wherein the measuring the fuel level comprises measuring the fuel level with an universal exhaust gas oxygen sensor." 69

XIV. GROUND 3: THE COMBINATION OF KERNS AND TAKAHASHI RENDERS OBVIOUS CLAIMS 1-5.....70

A. Motivation to Combine Kerns with Takahashi 70

B. Claim 1 72

1. 1[pre] "A method of controlling a direct injection spark ignited internal combustion engine that is capable of operating in a stratified mode where fuel is injected during a compression stroke of the engine and a homogeneous mode where fuels is injected during an intake stroke of the engine, the internal combustion engine having a catalytic converter and an NOx trap, comprising:" 72

2. 1[a] "measuring a first temperature of an NOx trap that is in contact with an exhaust gas exhausted from a combustion chamber while the engine is operating in the stratified mode;" 73

PETITIONER'S EXHIBIT 1003
US PATENT NO. 6,561,166

3. 1[b]: "enabling evaporated fuel vapors to enter the combustion chamber at a flow rate while the engine is operating in the stratified mode;" 77

4. 1[c]: "measuring a second temperature of the NOx trap while the engine is operating in the stratified mode; and" 78

5. 1[d]: "adjusting the flow rate of the evaporated fuel vapors as a function of the second temperature when the second temperature is within a lower temperature threshold and an upper temperature threshold." 81

C. Claim 2: "The method of claim 1, further comprising: switching the engine to the homogeneous mode when the second temperature is below the lower temperature threshold." 86

D. Claim 3: "The method of claim 2, further comprising: measuring a fuel level of the evaporated fuel vapors after the switching the engine to the homogeneous mode." 87

E. Claim 4: "The method of claim 3, wherein the measuring the fuel level comprises measuring the fuel level via an exhaust gas oxygen sensor." 88

F. Claim 5: "The method of claim 4, wherein the measuring the fuel level comprises measuring the fuel level with an universal exhaust gas oxygen sensor." 89

XV. SECONDARY CONSIDERATIONS 90

XVI. CONCLUSION 90

I. INTRODUCTION

1. I, Glenn R. Bower, Ph.D., declare as follows:

2. I have been retained on behalf of Mercedes-Benz USA, LLC ("MBUSA") for the above-captioned inter partes review proceeding to provide my expert opinions and expert knowledge. I understand that this proceeding involves U.S. Patent No. 6,561,166 to Halleron et al. ("the '166 patent"), titled "Purge fuel canister measurement method and system," and that the '166 patent is currently assigned to Michigan Motor Technologies LLC ("MMT"). I understand that the Petition submitted by MBUSA challenges claims 1-5 of the '166 patent.

3. The '166 patent describes methods for adjusting an engine's fuel delivery (fuel injection and evaporative fuel vapor flow) to manage the temperature of engine components. I am familiar with the technology described in the '166 patent as of its earliest possible priority date, June 13, 2000.

4. I have been asked to provide my independent technical review, analysis, insights, and opinions regarding the '166 patent and the references that form the basis for the grounds of unpatentability set forth in the Petition for inter partes review of the '166 patent filed by MBUSA.

5. In preparing this Declaration, I have reviewed and am familiar with all the documents cited herein. I have reviewed and am familiar with the '166 patent and its file history. I confirm that to the best of my knowledge the accompanying

exhibits are true and accurate copies of what they purport to be, and that an expert in the field would reasonably rely on them to formulate opinions such as those set forth in this Declaration.

6. I am being compensated at my customary rate of $575 per hour for my work on this case. My compensation is not dependent upon my opinions, my testimony, or the outcome of this case.

II. SUMMARY OF GROUNDS

Ground	’166 Patent Claims	References	Basis
1	1-3	Hepburn, Kerns	§103
2	4-5	Hepburn, Kerns, Kainz	§103
3	1-5	Kerns, Takahashi	§103

III. SUMMARY OF OPINIONS

7. In my opinion, the challenged claims of the ’166 patent would have been obvious in view of the combinations of references that MBUSA asserts, as well as the state of the art in automotive engine control on or before the year 2001, known to a person of ordinary skill in the art.

8. Independent claim 1 of the ’166 patent recites a method for controlling an engine’s fuel delivery to manage the temperature of engine components. The claim recites using engine components that were well known in the art at the time of the ’166 patent, including a direct injection spark ignition engine having a catalytic converter, an NOx trap, an exhaust gas oxygen sensor, and an engine controller.

The ’166 patent claims that its novel improvement is adjusting the flow rate of evaporated fuel vapors based on the temperature of the engine’s NOx trap.

9. As discussed in this Declaration, all these recited elements were well-known components found in generic engine control systems as June 13, 2000, the earliest possible priority date of the ’166 patent. And, as discussed in this Declaration, the claimed solution for adjusting fuel flow based on NOx trap temperature had been solved by the prior art in exactly the same way as recited in claims 1-5 of the ’166 patent. Moreover, as further discussed in this Declaration, well before the ’166 patent’s June 13, 2000 earliest possible priority date, a person of ordinary skill in the art would have had a good reason to combine the asserted prior art references, and in so doing, they would have had a reasonable expectation of success.

10. Therefore, it is my opinion that the challenged claims would have been obvious in view of the disclosures in the asserted prior art references, as described in detail below

IV. MATERIALS CONSIDERED

11. In forming the opinions expressed in this Declaration, I have considered and relied upon my education, background, and experience. In addition, I have reviewed and relied upon additional materials in preparation of this Declaration, as described below.

V. QUALIFICATIONS

12. I am currently a Scientist III at the University of Wisconsin-Madison Engine Research Center and Teaching Faculty III in the University of Wisconsin-Madison Mechanical Engineering Department. A copy of my curriculum vitae and past 5 years of professional witness history is attached herewith as Exhibit 1004.

13. I have over 25 years of experience working with internal combustion engine technologies and vehicle integration. As detailed below, I have worked on many projects that are highly relevant to the subject matter of the ’166 patent.

14. I earned the degree of Bachelor of Science in Mechanical Engineering from the University of Wisconsin-Platteville, and a Master of Science and a Doctor of Philosophy degree from the University of Wisconsin-Madison, both in the Department of Mechanical Engineering. My graduate advisor was Professor David E. Foster, who specialized in engines, combustion, and chemical kinetics.

15. I have extensive hands-on experience in the fields of internal combustion engine design and testing, vehicle powertrain design, modeling and testing, and vehicle design and testing.

16. In my roles of Scientist III at the University of Wisconsin-Madison Engine Research Center and Teaching Faculty III in the University of Wisconsin-Madison Mechanical Engineering Department, I teach various courses including engineering economics, freshman design, thermodynamics, fluid mechanics,

internal combustion engines, and senior design. I also oversee the college's automotive shop and conduct research at the Engine Research Center. I have been on the faculty at the University of Wisconsin-Madison since 1997.

17. In addition to my teaching activities, I am the automotive advisor to several undergraduate and graduate level student automotive teams from the University of Wisconsin, College of Engineering that are entered in international engineering design competitions. These competitions include the SAE Clean Snowmobile Challenge, the Baja SAE, the Formula SAE, and the SAE Autodrive Challenge II programs. As the automotive advisor, I interact with approximately 50 students each semester that are enrolled in independent study. Each student selects his/her design project, some of which concentrate on calibrating an engine. To prepare each team for its international competition, I guide the students in designing, building, and testing all aspects of the vehicles. I teach students at all levels not only the technical aspects of building a vehicle, but the intricacies of each of the engine's components and how it affects the overall engine/vehicle performance. Several of the automotive teams program and calibrate their respective engine/vehicle controllers.

18. I have been an active member of SAE International since 1988.

19. In addition to being the faculty advisor for the Formula SAE, the Formula SAE Electric, Baja SAE, SAE Clean Snowmobile and the Wisconsin

Autonomous teams, I am the University of Wisconsin-SAE Student Section Faculty advisor. I have served as the SAE Milwaukee Section Nominating Committee Representative and routinely organize and chair technical sections for the SAE Small Engine Technology Conference. During my tenure, I have peer reviewed numerous technical papers.

20. I have been actively consulting since receiving my Ph. D. in 1992. I have developed and certified engine combustion analysis systems, been retained as a professional witness in personal injury cases and State of Wisconsin vehicular accident with injury cases, patent litigation, international arbitration and hybrid vehicle development.

21. I have extensive practical experience in automotive powertrains, including hybrids and electrics, alternative fuels, engine emissions, engine aftertreatment systems, vehicle testing, high speed photography and in-cylinder engine combustion in addition to engine and hybrid controls. I am an experienced machinist and welder.

22. Starting in the 1997, I advised a student team conducting fuel economy and tailpipe emissions testing on a chassis dynamometer. The team tested their prototype on multiple occasions at Ford's most advanced testing facility and also at the Ann Arbor EPA vehicle testing facility.

23. In the fall of 1999, at the request of Ford Motor Company, the student's diesel-power, hybrid sedan was made available for a series of special tests by Ford Motor Company for inclusion in a special EPA vehicle study I personally accompanied the vehicle to the testing facility and ensured the vehicle was operating properly while also collecting and submitting our vehicle's logged engine and motor parameters.

24. I am a Board Certified Registered Professional Engineer in the State of Wisconsin: license # 29717

25. I also have experience with the U. S. Patent system. I am a named inventor of U.S. Patent No. 6,231,135, entitled "Hybrid Braking System."

VI. SCOPE OF ASSIGNMENT

26. In forming my opinions regarding the validity of the '166 patent, I have considered the '166 patent's specification, including the Abstract and the figures. I have also considered the language of the patent's claims, as those terms would have been understood by a person having ordinary skill in the relevant field at least at the time of the '166 patent's earliest possible priority date. I have also reviewed the prosecution (the "file history") of the '166 patent.

27. In forming my opinions, I have also considered the Petition Exhibits listed below and any additional materials and information cited in this Declaration.

I have also searched for and reviewed technical literature relevant to the field of the ’166 patent.

Exhibit	Description
1001	U.S. Patent No. 6,561,166 to Halleron et al. (“’166 Patent”)
1002	Prosecution File History of U.S. Patent No. 6,561,166 (“’166 File History”)
1003	Expert Declaration of Glenn R. Bower, Ph.D.
1004	Curriculum Vitae of Glenn R. Bower, Ph.D.
1005	U.S. Patent No. 5,910,096 to Hepburn et al. (“Hepburn”)
1006	U.S. Patent No. 6,192,672 to Kerns (“Kerns”)
1007	U.S. Patent No. 6,227,033 to Kainz (“Kainz”)
1008	U.S. Patent No. 6,341,487 to Takahashi et al.(“Takahashi”)

28. I have relied on my personal knowledge, education, training, and professional experience in order to form my opinions concerning the ’166 patent, including my experience in researching, designing, prototyping and testing automobiles and automotive systems—including fuel system components and control.

29. This Declaration explains, based on facts and information currently available to me, the subject matter and opinions related to this Proceeding. As such, I am prepared to provide expert testimony regarding opinions formed resulting from my analysis of the issues and materials considered in this declaration, if asked to do so by the Board or by the parties’ attorneys.

30. Additionally, I may discuss my own work, teachings, and knowledge of the state of the art in the relevant time period. I may rely on handbooks,

textbooks, technical literature, and the like to demonstrate the state of the art in the relevant period and the evolution of relevant technologies.

31. Throughout this Declaration, I refer to specific pages of the '166 patent and other documents. These citations are intended to be exemplary and are not intended to convey that the citations are the only source of evidence to support the propositions for which they are cited. I reserve my right to amend or alter my analysis and opinions in response to positions Patent Owner may take or upon the discovery of new information.

32. I am being compensated at my customary consulting rate of $575 per hour for the time I spend on this matter. My compensation is in no way contingent on the nature of my opinions or the outcome of this or any other proceeding. I have no other interest in this proceeding. All of the opinions expressed in this Declaration are my own.

VII. LEGAL UNDERSTANDING

33. In this section I describe my understanding of certain legal standards that I have relied upon in forming my opinions set forth in this Declaration. I have been informed of these legal standards by MBUSA's attorneys. I am not an attorney and I have not thoroughly researched the relevant patent law. I am relying only on instructions from MBUSA's attorneys for these legal standards.

A. Person of Ordinary Skill in the Art

34. I am informed that patent validity is determined from the perspective of a person of ordinary skill in the pertinent art at the time of the invention ("POSITA"). I understand that a POSITA is a hypothetical person who is presumed to be aware of all pertinent art, thinks along conventional wisdom in the art, and is a person of ordinary creativity—not an automaton.

35. In forming my opinions, I have relied on my personal knowledge and professional experience in researching, designing, prototyping and testing automobiles and automotive systems—including fuel system components and control, and on the documents and information referenced in this Declaration.

36. In deciding the level of ordinary skill in the art, I am informed that the following factors may be considered:

- the levels of education and experience of persons working in the field;
- the types of problems encountered in the field; and
- the sophistication of the technology.

B. Claim Construction

37. I am informed that a patent may include two types of claims, independent claims and dependent claims. An independent claim stands alone and includes only the limitations it recites. A dependent claim can depend from an independent claim or another dependent claim. I am informed that a dependent

claim includes all the limitations that it recites, in addition to the limitations recited in the claim from which it depends.

38. I understand that patent claim terms can be interpreted, or "construed." I understand that, in construing a claim, the words of patent claims are given their plain meaning, as a POSITA would understand them at the time of the invention, view of the patent and file history, unless their meaning is defined or disclaimed. I am informed that dictionaries, treatises, and other "extrinsic" sources of evidence may assist in determining the plain meaning of a term, but they cannot override a meaning that is otherwise unambiguous based on the intrinsic evidence.

39. I understand that in construing claims in an IPR proceeding, words in a claim are given their plain meaning, which is the meaning understood by a person of ordinary skill in the art in view of the patent and file history, unless specifically defined in the patent or prosecution history. I also understand that dictionaries or other extrinsic sources may assist in determining the plain and ordinary meaning but cannot override a meaning that is unambiguous from the intrinsic evidence.

40. I have been informed by MBUSA's counsel that claim construction is a matter of law for the arbiter of law to decide. I am informed that, in an *inter partes* review, the Patent Trial and Appeal Board ("PTAB") interprets claims in the same way as a district court would. Likewise, I understand that a POSITA interprets claims in the same way in both types of proceedings.

41. I reserve my right to amend or alter my analysis and opinions in view of any claim constructions adopted by the arbiter of law.

C. Obviousness

42. I am informed that a patent claim is unpatentable and invalid if the subject matter of the claim as a whole would have been obvious to a person of ordinary skill in the art of the claimed subject matter as of the time of the inventions at issue. I am informed that the following factors must be evaluated to determine whether the claimed subject matter is obvious: (1) the scope and content of the prior art; (2) the difference or differences, if any, between each claim of the patent and the prior art; and (3) the level of ordinary skill in the art at the time the patent was filed. Unlike anticipation, which allows consideration of only one item of prior art, I am informed that obviousness may be shown by considering more than one item of prior art. Moreover, I understand that objective indicia of non-obviousness, also known as "secondary considerations," like the following also may be considered when assessing obviousness: (1) commercial success; (2) long-felt but unresolved needs; (3) copying of the invention by others in the field; (4) initial expressions of disbelief by experts in the field; (5) failure of others to solve the problem that the inventor solved; and (6) unexpected results. I also understand that evidence of objective indicia of non-obviousness must have a nexus with the claimed subject matter.

VIII. THE ’166 PATENT

A. Technology Background

1. Overview of Reciprocating Internal Combustion Engines

43. Almost all internal combustion engines use reciprocating engine geometry where pistons move up and down inside the cylinders and, through each piston and a connecting rod, transfer power to the crankshaft and then to whatever the engine is driving. The pistons therefore move from the bottom of the cylinder to the top of the cylinder and then back down again. The bottom position of the piston is called “bottom dead center” (“BDC”), or sometimes “bottom center” (“BC”). The top position of the piston is called top dead center (“TDC”) or “top center” (“TC”). Each upward or downward motion of the piston is called a “stroke.”

44. The most common type of internal combustion engine uses the four-stroke cycle (see Figure 1-2 from Heywood below). These four strokes—a series of downward and upward motions of the piston—are called the intake stroke, compression stroke, expansion stroke and exhaust stroke. Normally, combustion occurs just before the end of the compression stroke through the start of the expansion stroke.

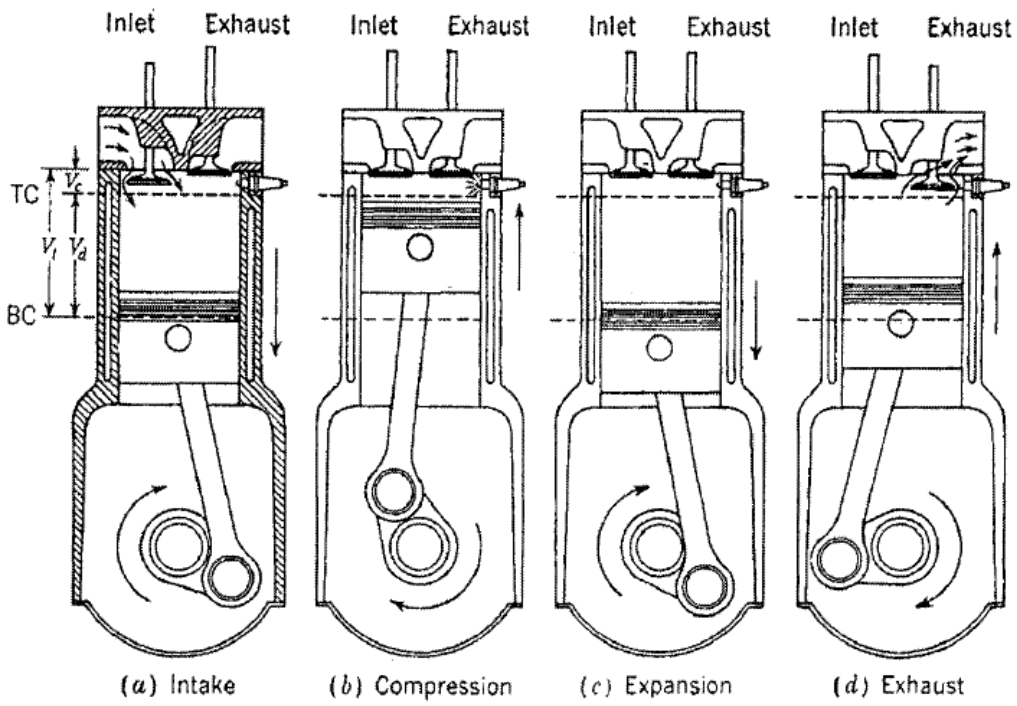

FIGURE 1-2
The four-stroke operating cycle.[10]

John Heywood, *Internal Combustion Engine Fundamentals*, (1st ed. 1998) at Figure 1-2.

45. Internal combustion engines are used to produce power by burning hydrocarbon fuels mixed with air. When the fuel is combusted, its raises the temperature and pressure of the gases in the combustion chamber. The high pressure gases push the piston down—this power is transmitted out of the engine-in the case of automobiles, powering the vehicle down the road.

2. DISI Engines Having Two Combustion Modes

46. Direct injection spark ignition (DISI) engines were well-known for decades before the ’166 patent. For example, automobile manufacturers, such as Robert Bosch GmbH and Mercedes-Benz, began experimenting with timed, high-

pressure, direct gasoline injection in the mid-1930s. F. Aid, *Bosch Fuel Injection Systems*, (2001), 19-21, 26, 30-32. By the 1990s, DISI engines were implemented in large-scale passenger car production. Ex. 1005, 1:18-28. Thus, the auto industry had been using DISI engines well before the ’166 patent.

47. Operating DISI engines in either a stratified mode or a homogeneous mode was well-known before the ’166 patent. *E.g.*, Ex. 1005, 3:35-37; Ex. 1006, 1:26-2:20, 3:41-42, 9:52-55. Each DISI engine cylinder includes a fuel injector for injecting fuel directly into the combustion chamber and a spark plug for igniting the cylinder’s air/fuel mixture. In the homogeneous mode, fuel is injected during the intake stroke to allow maximum time for air and fuel to combine evenly throughout the entire combustion chamber. Ex. 1005, 3:44-47; Ex. 1006, 1:26-2:20, 3:41-42, 9:52-55. In the stratified mode, fuel is injected during the compression stroke to provide a stoichiometric mixture near the spark plug, while the overall mixture in the combustion chamber is lean. Ex. 1005, 3:37-40; Ex. 1006, 1:26-2:20, 3:41-42, 9:52-55. Direct cylinder fuel injection makes possible the formation of the heterogeneous or stratified fuel-air mixture in the cylinder simply by altering the injection timing and fuel delivery, functions easily performed by an engine’s electronic control system.

48. Direct cylinder injection allows for a known amount of fuel to be delivered to each cylinder which results in improved engine efficiency and lower

tailpipe emissions; this is mainly due to the elimination of precipitating or condensing injected fuel on the walls of the intake manifold. Wall wetting could only be 'estimated' and was a common problem for engines using manifolds, port fuel injectors, or carburetors.

3. Purging Fuel Vapor

49. Long before the '166 patent, purging fuel vapor into the engine's combustion chamber was common practice to meet stringent EPA emission standards. Hydrocarbons in the atmosphere, react with oxides of nitrogen in the presence of sunlight to form smog.

50. Gasoline is a mixture of short and long chain hydrocarbons. The shorter chain hydrocarbons tend to evaporate at a lower temperature than the longer chain hydrocarbons. The smaller hydrocarbons are necessary for starting the engine in cold conditions—only vaporized fuel can combust. Once the smaller molecules combust, they provide thermal energy which vaporizes the longer chain hydrocarbons—starting the engine.

51. The fuel in a vehicle's tank will vaporize the smaller hydrocarbons when a vehicle is parked in a hot environment—the mall, airport, or other large asphalt surface on a hot day. As the smaller hydrocarbons vaporize, the pressure in the fuel tank increases—these hydrocarbons will rarely recondense into the liquid fuel.

52. To limit smog, evaporated fuel from the fuel tank cannot be vented to the atmosphere, it must be contained (usually in the fuel tank and also in a carbon canister) and then routed into the engine's intake system while the engine is operated next; such that the evaporated fuel vapors will be combusted into water and carbon dioxide.

53. The '166 patent acknowledged, gasoline-powered engines "typically collect evaporated fuel vapors from the gasoline tank in a carbon canister," where the "evaporated fuel vapors are purged . . . into the intake manifold." Ex. 1001 at 1:60-66. Once introduced into the intake manifold, the evaporated fuel vapors, along with the air supply, pass into a combustion chamber. Ex. 1001 at 1:60-66.

B. <u>Level of Ordinary Skill in the Art</u>

54. In my opinion, a POSITA at the time of the alleged invention would have had a B.S. degree in Electrical Engineering or Mechanical Engineering (or equivalent), as well as at least 2-3 years of industry experience or, alternatively, at least an M.S. degree in Electrical Engineering or Mechanical Engineering and 1-2 years of industrial experience.

55. I am well qualified to determine the level of ordinary skill in the art. First, I am very familiar with the technology of the '166 patent as of the June 13, 2000 timeframe. My academic and teaching background in both Electrical and Mechanical Engineering also provides significant insight into the expectations of a

person of a given academic level or graduate certification. As mentioned above, by 2001, I had acquired extensive experience relating to engine control systems in vehicles, including developing microprocessor-based engine control systems for regulating air intake, fuel injection, and ignition.

C. Claims

56. The ’166 patent contains 11 claims, 1 independent claim and 10 dependent claims. Claim 1 is representative and reproduced below:

> A method of controlling a direct injection spark ignited internal combustion engine that is capable of operating in a stratified mode where fuel is injected during a compression stroke of the engine and a homogeneous mode where fuels is injected during an intake stroke of the engine, the internal combustion engine having a catalytic converter and an NOx trap, comprising:
>
> measuring a first temperature of an NOx trap that is in contact with an exhaust gas exhausted from a combustion chamber while the engine is operating in the stratified mode;
>
> enabling evaporated fuel vapors to enter the combustion chamber at a flow rate while the engine is operating in the stratified mode;
>
> measuring a second temperature of the NOx trap while the engine is operating in the stratified mode; and
>
> adjusting the flow rate of the evaporated fuel vapors as a function of the second temperature when the second temperature is within a lower temperature threshold and an upper temperature threshold.

D. <u>Specification</u>

57. The ’166 patent was issued May 13, 2003, from U.S. Application No. 09/861,983 (“the ’983 application”), which was filed on May 16, 2001. See Ex. 1001, field (22). The ’166 patent claims priority to Provisional Application No. 60/211,085, filed June 13, 2000.

58. The ’166 patent claims methods for controlling fuel injection for a direct injection spark ignition (“DISI”) engine that is capable of operating in a stratified and homogeneous combustion mode. Ex. 1001 at Abstract. When an engine is operating in the in stratified combustion mode, fuel is injected into the engine’s combustion chambers such that the chamber contains fuel in stratified layers with different air/fuel concentrations. *Id.* The stratified layers have progressively decreasing air/fuel ratios, with layers closest to the spark plug having a richer ratio, or a higher concentration of fuel, and each subsequent layer having a leaner ratio, or lower concentration of fuel, than the previous layer. *Id.* at 1:30-33. The figure below shows an example of stratified fuel injection, where λ represents the air/fuel ratio of the layers of fuel. A λ of 1 represents a 1:1 ratio of air to fuel. A λ greater than 1 represents a leaner ratio where there is a higher concentration of air than fuel. A λ of infinity indicates an area where the concentration of fuel is zero.

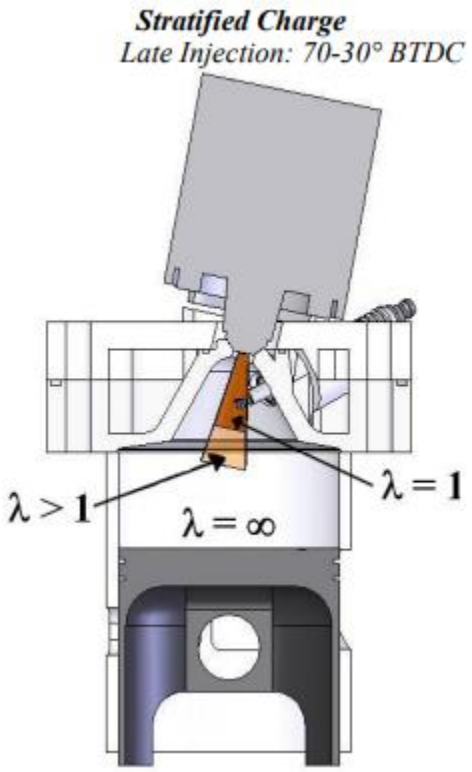

Justin W. Johnson, *Comparison of Stratified and Homogeneous Combustion in a Direct-Injected Two-Stroke Engine for Snowmobile Applications*, M.S. Thesis, Dept. Mech. Eng., University of Idaho, Moscow, ID, 2007 at FIG. 17.

59. When the engine operates in the homogeneous combustion mode, a homogeneous mixture of air and fuel, or a mixture where the air to fuel ratio is consistent throughout the mixture, is injected into the combustion chamber. Ex. 1001 at 1:33-35. The homogeneous mixture is controlled such that the air/fuel ratio or λ is as close to 1, or a 1:1 ratio of air to fuel, as possible, though it may be slightly leaner or richer. *Id.* at 1:35-36. The figure below shows an example of a

combustion chamber operating in a homogeneous combustion mode where the air/fuel mixture throughout the chamber has a λ of 1.

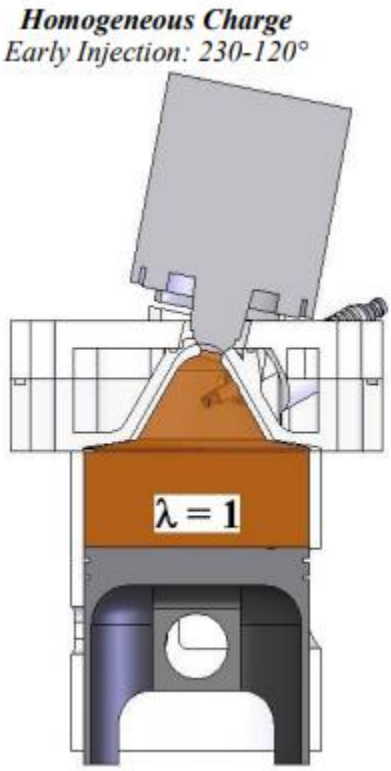

Justin W. Johnson, *Comparison of Stratified and Homogeneous Combustion in a Direct-Injected Two-Stroke Engine for Snowmobile Applications*, M.S. Thesis, Dept. Mech. Eng., University of Idaho, Moscow, ID, 2007 at FIG. 17.

60. Depending on the combustion mode, fuel is injected into the engine at different points in engine operation. In the stratified combustion mode, the engine injects fuel during the engine's compression stroke. *Id.* at 2:35-40. The compression stroke is the stroke during which a piston compresses the combustion chamber, thereby increasing the chamber's temperature and pressure. *Id.* In the

homogeneous combustion mode, the engine injects fuel during the engine's intake stroke. The intake stroke is the stroke during which the piston moves downward, expanding the combustion chamber and drawing the air/fuel mixture into the combustion chamber. *Id.* The figure below shows an engine's four stroke process, including the intake and compression strokes:

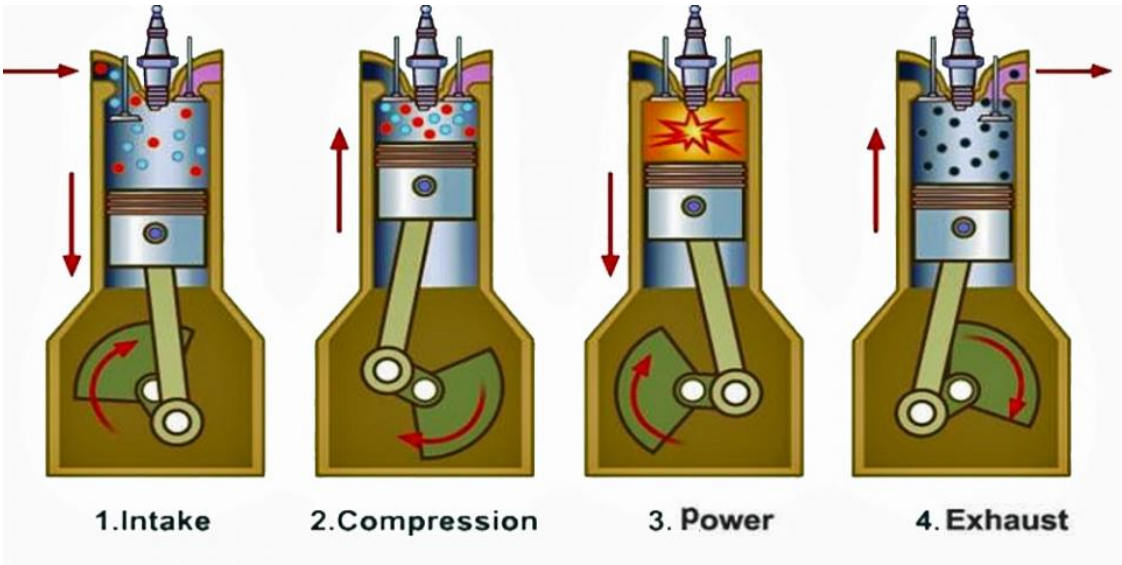

Haynes, *Beginner's guide: what is a four stroke engine and how does it work* (Dec. 24, 2020), https://haynes.com/en-us/tips-tutorials/beginners-guide-what-four-stroke-engine.

61. Which combustion mode the engine is operating affects the engine's emissions. For example, engines that can operate in a stratified combustion mode generate nitrous oxide or NOx that can't be reduced by the engine's 3-way catalyst, such that a NOx trap is included to capture the NOx. In order for the NOx trap to efficiently capture NOx emissions, the NOx trap should operate in a temperature

range that is defined by a lower and upper temperature threshold. Quantity of fuel injected into the combustion chamber and when that fuel is injected affects the NOx trap's temperature, and accordingly impacts the NOx traps ability to capture emissions. When the NOx trap has been fully saturated with NOx, the combustion mode must be switched back to homogeneous operation to release the trapped NOx.

62. The '166 patent claims nothing more than testing the NOx trap temperature and adjusting the flow rate of fuel vapors based on the NOx temperature. The '166 patent teaches determining the NOx trap or catalyst temperature via a temperature sensor. *Id.* at 4:51-53. If the engine is operating in the homogeneous combustion mode and the NOx trap temperature is within an allowable range, the engine is switched to the stratified combustion mode to lower fuel consumption. *Id.* at 4:55-67. While in the stratified combustion mode, the engine purges its carbon cannister to allow fuel vapors to enter the intake manifold. *Id.* at 5:1-5. Once fuel vapors have been introduced to the engine's combustion chamber, the NOx trap temperature is measured again. *Id.* at 5:6-9.

63. If the change in NOx trap temperature after fuel vapors have entered the combustion chamber is within an allowable range, the system determines the engine is producing enough heat to keep the NOx trap at an operational temperature, and the system does not need to increase the flow rate of the evaporative fuel vapors to increase engine temperature. *Id.* at 5:16-21. Because the engine does not

require additional fuel to raise the NOx trap temperature, the engine remains in stratified mode and conserves fuel consumption. *Id.* at 5:16-21.

64. If the change in the NOx trap temperature of the engine in stratified combustion mode is above the allowable range, the evaporated fuel vapors that entered the engine's combustion chamber are too rich (*i.e.*, have to low of an air/fuel ratio). *Id.* at 5:24-31. In response, the system will then reduce the fuel vapor flow rate until the NOx trap temperature change is within the allowable range or the engine can be switched to homogenous combustion. *Id*.

65. If the change in NOx trap temperature is below the allowable range, the evaporated fuel vapors are either very rich or too lean. *Id.* at 5:36-43. In response, the engine will switch the combustion mode to homogeneous to determine whether the fuel vapors are very rich or too lean. *Id.* Once in the homogeneous combustion mode, the system measures the fuel level in the fuel vapors via a universal exhaust gas oxygen sensor (UEGO). *Id.* at 5:44-50. If the fuel levels in the fuel vapors are lean, the system switches the engine back to the stratified combustion mode and increases the flow of evaporated fuel vapors. *Id* at 5:44-56. If the fuel levels in the fuel vapors are very rich, the system switches the engine back to the stratified combustion mode and reduces the fuel vapor flow rate until the NOx trap temperature change is within the allowable range. *Id.* at 5:56-63.

66. Figure 2 below demonstrates this claimed process:

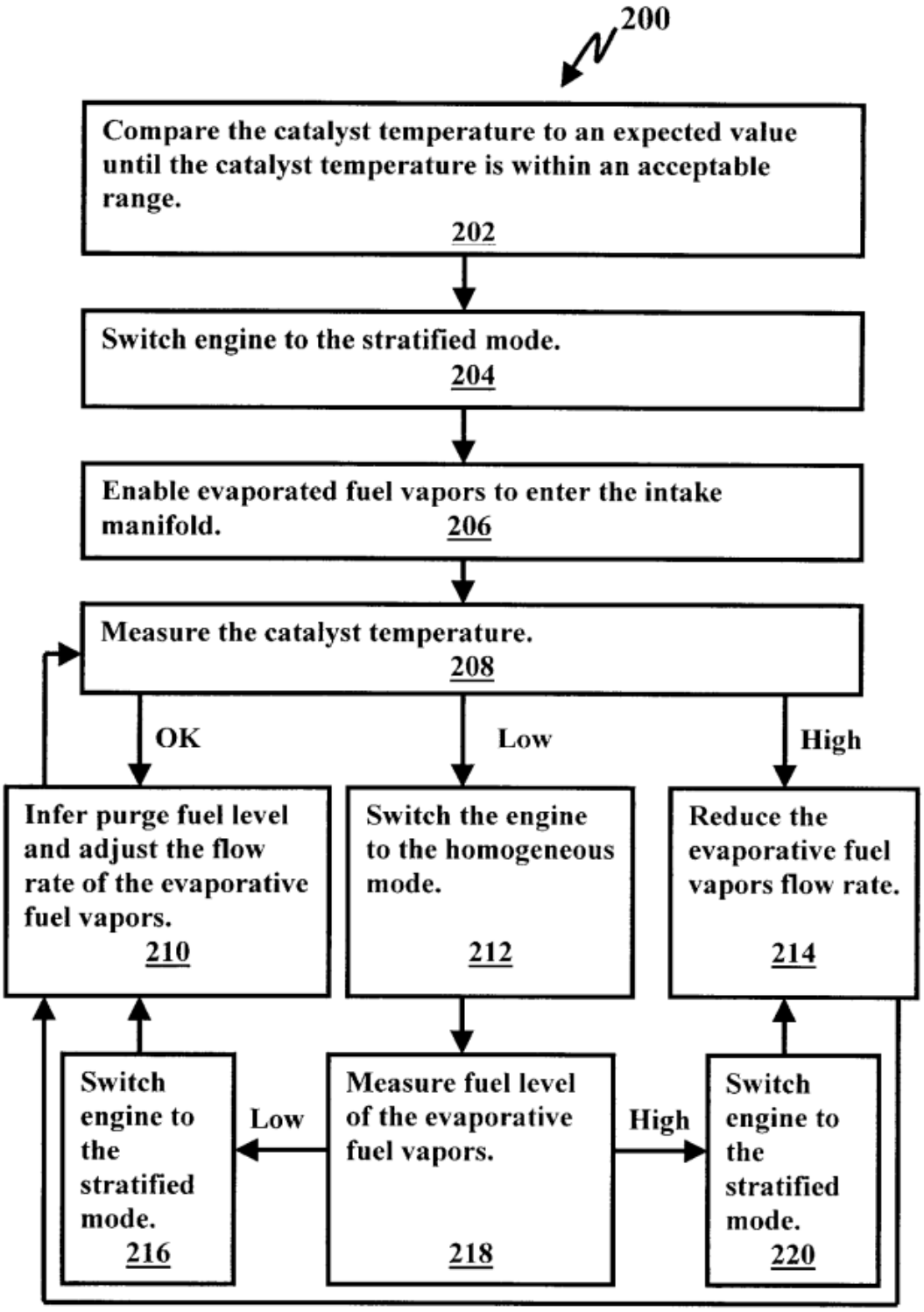
200
Compare the catalyst temperature to an expected value until the catalyst temperature is within an acceptable range.
202
Switch engine to the stratified mode.
204
Enable evaporated fuel vapors to enter the intake manifold.
206
Measure the catalyst temperature.
208
OK
Low
High
Infer purge fuel level and adjust the flow rate of the evaporative fuel vapors.
210
Switch the engine to the homogeneous mode.
212
Reduce the evaporative fuel vapors flow rate.
214
Switch engine to the stratified mode.
216
Low
Measure fuel level of the evaporative fuel vapors.
218
High
Switch engine to the stratified mode.
220

67. Regardless of the control path taken in Figure 2, the last control block before repeating the process is block 210; the ’166 patent claims only increasing or decreasing the flow rate evaporative fuel vapors based on whether the NOx trap temperature is too high or too low.

E. <u>Prosecution History</u>

68. I have reviewed the prosecution history of the ’166 patent (Ex. 1001). The Examiner did not render any rejections based on any substantive consideration of prior art.

69. Based on my review of the first page of the ’166 patent prosecution history, I see the patent issued from U.S. Application No. 09/861,983 (“the ’983 application”), which was filed on May 16, 2001. See Ex. 1001, field (22). I understand the ’166 patent claims priority to Provisional Application No. 60/211,085, filed June 13, 2000.

70. Based on my review of the prosecution history, I understand that prior art references Hepburn, Kainz, and Takahashi were not considered by the Examiner during prosecution. Ex. 1002. I also understand that certain sections of the Kerns reference were considered by the examiner, but that the Figure 7 embodiment relied on by MBUSA in its Petition was never considered by the Examiner. *Id.*

71. Based on my review, I understand the original ’983 application contained method claims 1-11 and device claims 12-24. Ex. 1002 at 39-43. The

Examiner issued a Non-Final Rejection of on July 10, 2002 rejecting all twenty-four claims based on Kerns. *Id.* at 55-58. In particular, the Examiner determined the embodiments of Kerns described in Figures 8-10 anticipated the claims, as shown in the Examiner's statement below:

> "Kerns teaches a method of controlling a direct injection spark ignited internal combustion engine comprising a step of adjusting a flow rate of evaporated fuel vapors as a function of a temperature of a catalyst (see ***figures 8-10, col. 11 line 42 through col. 13 line 10***)."
>
> *Id.* at 58 (emphasis added).

72. In an attempt to overcome the rejection, the Applicant cancelled claims 14-15, and amended claim 1 to require an engine having an "NOx trap" a "catalytic converter" and measuring the temperature of the NOx trap to determine whether the temperature is between a lower and upper threshold. *Id.* at 76. The Applicant argued requiring measuring an NOx trap temperature to determine if it is between a lower and upper threshold distinguished the claims from the Kerns' Figure 5 embodiment. *Id.* After these amendments, the Examiner allowed the method claims (claims 1-11) but again rejected the device claims based on the Figure 5 embodiment of Kerns. *Id.* at 80. The Applicant did not attempt to overcome the rejection, and cancelled the device claims. *Id.* at 87-91.

73. Based on my review, the Examiner never discussed, cited, or considered the Figure 7 embodiment of Kerns or its corresponding specification. As discussed in detail in Grounds I-III, the Figure 7 embodiment of Kerns discloses

the limitations of claims 1-5 of the ’166 patent. In particular, Kerns’ Figure 7 embodiment discloses an NOx trap having an upper and lower temperature threshold. Ex. 1006 at 11:1-8. This is the exact requirement the Applicant argued differentiated the ’166 patent claims from Kerns’ Figure 5 embodiment. *Id.* at 76.

IX. CHALLENGED CLAIMS

74. I have analyzed claims 1-5 of the ’166 patent in connection with MBUSA’s petition for *inter partes* review that accompanies this Declaration. I understand MBUSA is challenging the validity of the first 5 claims (“Challenged Claims”). The Challenged Claims are reproduced below for reference.

Claim 1	
1[pre]	A method of controlling a direct injection spark ignited internal combustion engine that is capable of operating in a stratified mode where fuel is injected during a compression stroke of the engine and a homogeneous mode where fuels is injected during an intake stroke of the engine, the internal combustion engine having a catalytic converter and an NOx trap, comprising:
1[a]	measuring a first temperature of an NOx trap that is in contact with an exhaust gas exhausted from a combustion chamber while the engine is operating in the stratified mode;
1[b]	enabling evaporated fuel vapors to enter the combustion chamber at a flow rate while the engine is operating in the stratified mode;
1[c]	measuring a second temperature of the NOx trap while the engine is operating in the stratified mode; and
1[d]	adjusting the flow rate of the evaporated fuel vapors as a function of the second temperature when the second temperature is

	within a lower temperature threshold and an upper temperature threshold.

Claim 2	
2	The method of claim 1, further comprising: switching the engine to the homogeneous mode when the second temperature is below the lower temperature threshold.

Claim 3	
3	The method of claim 2, further comprising: measuring a fuel level of the evaporated fuel vapors after the switching the engine to the homogeneous mode.

Claim 4	
4	The method of claim 3, wherein the measuring the fuel level comprises measuring the fuel level via an exhaust gas oxygen sensor.

Claim 5	
5	The method of claim 4, wherein the measuring the fuel level comprises measuring the fuel level with an universal exhaust gas oxygen sensor.

X. CLAIM CONSTRUCTION

75. It is my understanding that the challenged claims of the ’166 patent are to be given their ordinary and customary meaning as understood by one of ordinary skill in the art at the time of the alleged invention in light of the specification and the

prosecution history pertaining to the patent. Therefore, for the purposes of this Declaration, all claim terms are given their plain and ordinary meaning.

XI. SUMMARY OF PRIOR ART

A. <u>Hepburn</u>

76. Like the '166 patent, Hepburn discloses a method for adjusting the fuel injection of a "[d]irect injection spark ignited [("DISI")] internal combustion engine 10" capable of operating in a stratified and homogeneous combustion mode" to regulate the temperature of the engine's NOx trap. Ex. 1005 at Abstract.

77. Hepburn discloses a DISI engine having common, well known components including "a plurality of combustion chambers" connected to an "exhaust manifold 48" and "controlled by electronic engine controller 12." Ex. 1005 at Abstract; 2:55-67. Hepburn teaches that its DISI engine also includes two well-known emissions control devices: a "catalytic converter 70" and "Nitrogen oxide (NOx) absorbent or trap 72." *Id.* at 3:21-22, 3:61-67. Annotated Figure 1 from Hepburn below shows its DISI engine and its various components:

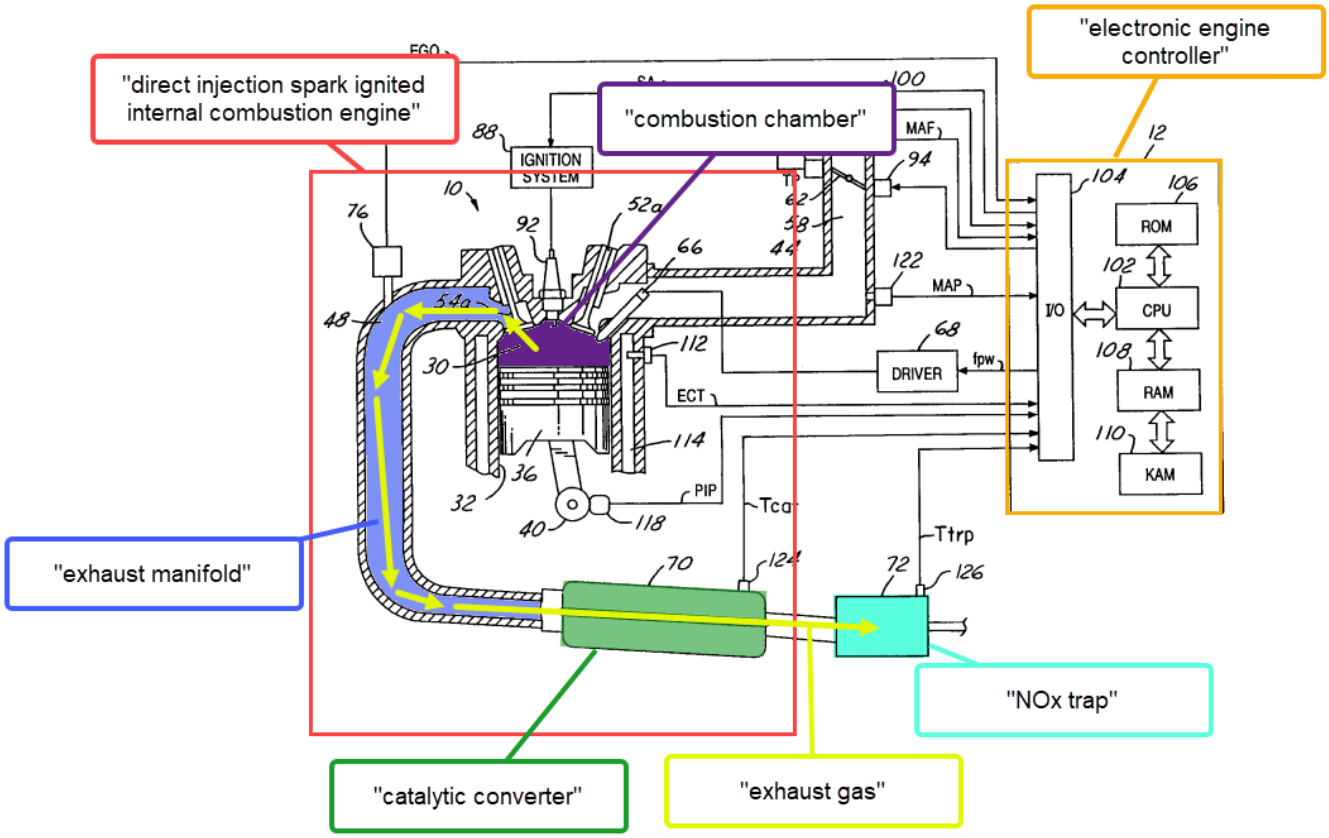

Id. at FIG. 1 (annotations added).

78. Hepburn teaches same engine control method as the ’166 patent for controlling its DISI engine’s fuel injection based on the NOx trap temperature. Annotated Figure 2 from Hepburn below demonstrates Hepburn’s method of fuel injection control. First, as indicated in step 202, Hepburn teaches determining whether the engine is operating in the stratified combustion mode. *Id*. at 4:27-38.

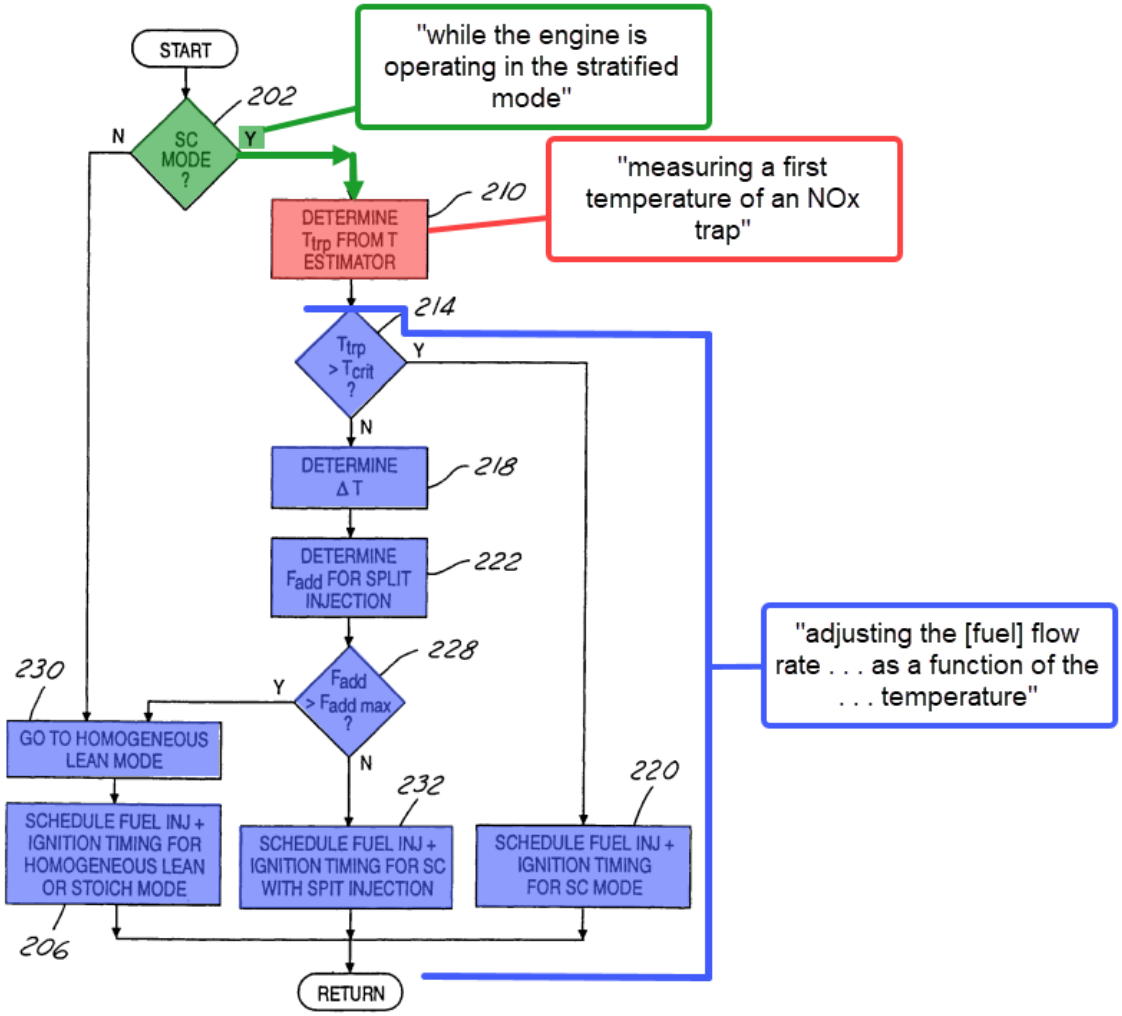

Id. at FIG. 2 (annotations added).

79. If "engine 10 is operating in the stratified mode" Hepburn teaches determining the "temperature of NOx trap 72 (Ttrp)." *Id.* at 4:38-40. If the NOx trap temperature is below a lower threshold "critical temperature Tcrit," Hepburn teaches determining the amount of fuel Fadd required to raise the NOx trap temperature and injecting that fuel quantity during each combustion chamber's exhaust stroke. *Id*. at 4:52-63. If the NOx trap temperature is an amount less than Tcrit such that Fadd is greater than the amount of fuel saved by operating in the

stratified combustion mode, Hepburn teaches changing its combustion mode to homogeneous. *Id.* at 4:63-67. If NOx trap temperature is within the temperature range in which the NOx can operate effectively, the engine remains in the stratified combustion mode. *Id.* at 4:46-51.

B. <u>Kerns</u>

80. Like the ’166 patent, Kerns discloses a method for adjusting the fuel delivery of a DISI engine to regulate the temperature of the engine’s NOx trap. Kerns teaches a DISI engine comprising well-known and common components, including a plurality of combustion chambers connected to an exhaust manifold, and an electronic engine controller for controlling engine operation. Ex. 1006 at Abstract, 1:26-20. Kerns’ DISI engine also includes two devices commonly used in the prior art for controlling emissions: a “catalytic converter 70” and an “NOx trap 72,” and a “UEGO,” or universal “[e]xhaust gas oxygen sensor 76.” Id. at 3:21-65. Annotated Figure 1 below demonstrates Kerns’ DISI engine and its various components:

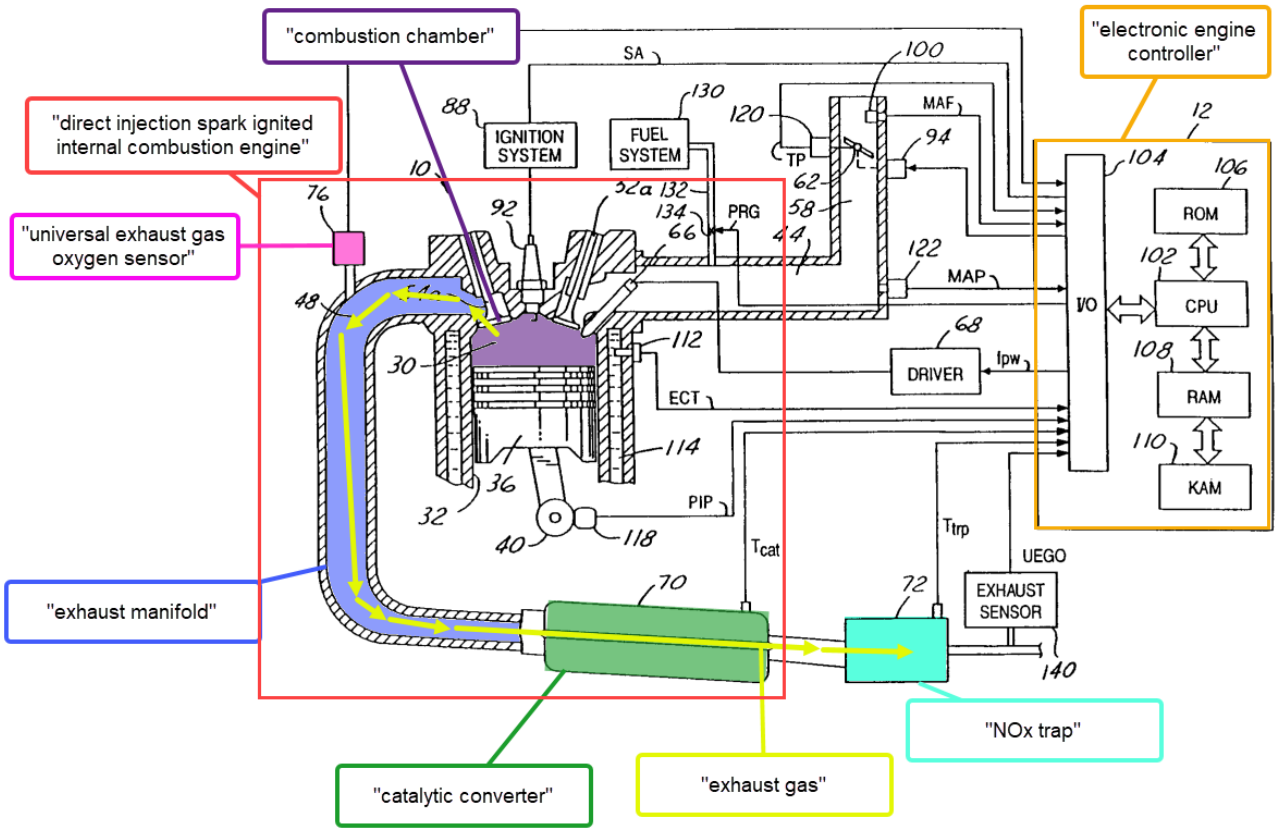

Id. at FIG. 1 (annotations added).

81. Kerns further teaches a method for controlling the DISI engine's fuel injection to manage NOx trap temperature. Kerns' engine control method is demonstrated in annotated Figure 2 below:

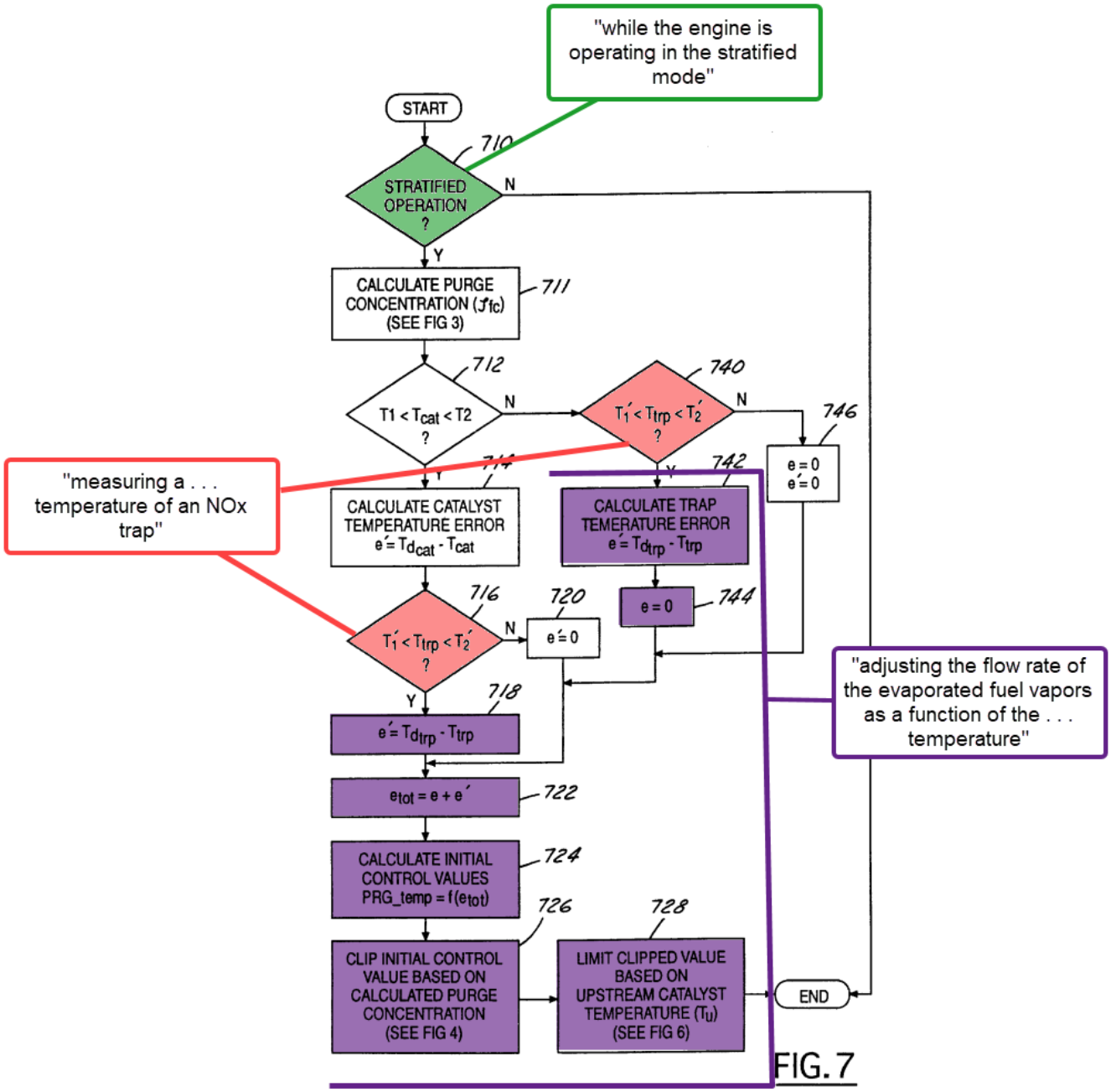

Id. at FIG. 2 (annotations added).[1]

---

[1] Figure 7 of Kerns incorrectly labels the output temperature error of step 714 as "e'." The output of step 714 is a catalyst temperature error "e." Ex. 1006 at 10:64-67.

82. Kerns teaches that "[f]irst . . . a determination is made as to whether engine 10 is operating in a stratified mode." *Id.* at 10:51-53. If the engine is operating in the stratified combustion mode, Kerns determines the NOx trap temperature and whether the temperature is between a lower threshold temperature T1' and an upper temperature threshold T2'. *Id.* at 11:1-3. If the temperature of the NOx trap is low enough that the amount of fuel that would need to be injected into the combustion chamber to sufficiently raise the temperature is greater than the amount of fuel saved by operating in the stratified combustion mode, Kerns teaches changing the engine's combustion mode to homogeneous. *Id.* at 7:62-8:5.

83. If the temperature of the NOx trap is within the lower and upper threshold, Kerns calculates the difference between the temperature of the NOx trap and the desired temperature of the NOx trap. *Id.* at 11:8-11. Kerns refers to its calculated temperature difference as "trap temperature error" or "e'." *Id.* Based on a "total error" which is the sum of the "catalyst temperature error ("e")" and the "trap temperature error ("e'.")," Kerns calculates the flow rate of fuel vapors required to adjust the temperature of the NOx trap from its current temperature to the desired temperature. *Id.* at 9:10-15, 11:12-16. Kerns then enables the required amount of fuel vapors to enter the combustion chamber. *Id.*

C. Kainz

84. Like the '166 patent, Hepburn, and Kerns, Kainz teaches methods for monitoring engine exhaust and controlling engine fuel injection based on aspects of the exhaust. Ex. 1007 at Abstract. Kainz also discloses an engine with well-known components, including an engine controller, an exhaust manifold, a catalytic converter, and a universal exhaust gas oxygen sensor. Ex. 1007 at 2:36-3:13. Various components of Kainz's engine are shown in annotated Figure 1 below:

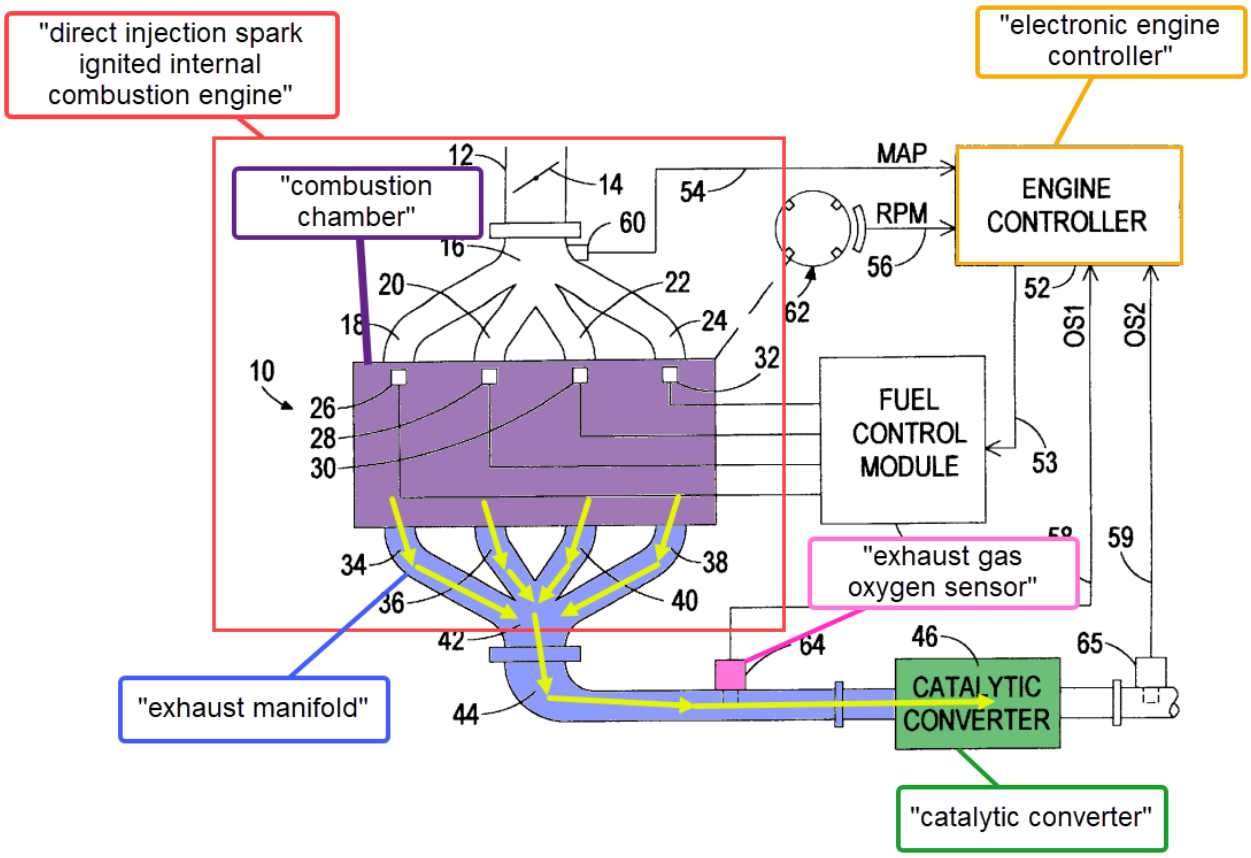

Ex. 1007 at FIG. 1 (annotations added).

85. Kainz explicitly discloses that its exhaust gas oxygen sensor may be "a universal, or wide-range oxygen sensor." Ex. 1007 at 1:27-31.

D. Takahashi

86. Like the '166 patent, Hepburn, Kerns, and Kainz, Takahashi teaches method for controlling the fuel injection of a DISI engine to manage the temperature of the engine's NOx trap. Ex. 1007 at Abstract, 2:54-64. Annotated Figure 6 below demonstrates Takahashi's method for controlling fuel injection. Takahashi teaches a controller routine operating at an interval of 10 ms which also measures the temperature of the engine's NOx trap, determines whether the temperature is above an upper temperature threshold and, if it is, increasing the amount of fuel injected into to the engine's combustion chamber to promote the release of sulfur oxides. *Id.* at 10:30-57.

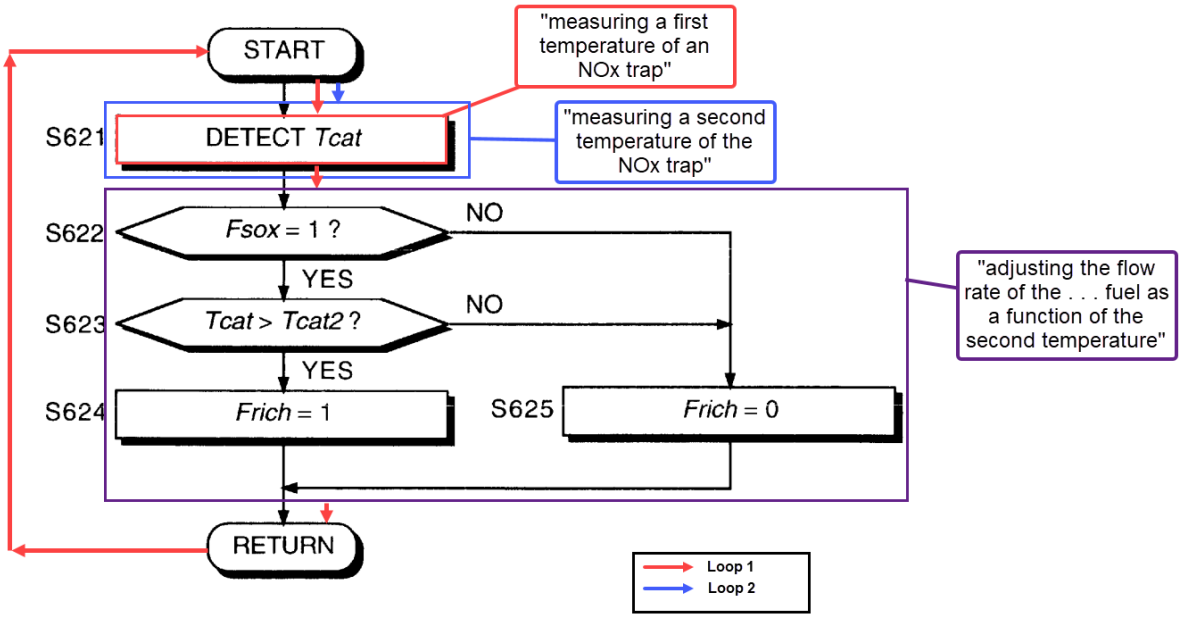

Id. at FIG. 6 (annotations added).

XII. GROUND 1: THE COMBINATION OF HEPBURN AND KERNS RENDERS OBVIOUS CLAIMS 1-3.

87. In my opinion, a POSITA at the time of the alleged invention would have found claims 1-3 obvious over Hepburn in view of Kerns.

A. Motivation to Combine Hepburn with Kerns

88. In my opinion, a POSITA in possession of Hepburn's fuel injection methods would have been motivated modify the method to enable fuel vapors to enter the combustion chamber and adjust the flow of evaporated fuel vapors when the temperature of the NOx trap is within a lower and upper temperature threshold based on the teachings of Kerns.

89. Kerns teaches that its fuel delivery technique increases the amount of time the engine can operate in the stratified combustion mode and "therefore increase[s] fuel economy." Ex. 1006 at 2:33-42. A POSITA also would have been motivated to seek out teachings like those in Kerns to increase the fuel economy of Hepburn's engine because Hepburn states that one of the goals of its invention is "to control temperature of emission control devices . . . with minimal effect on fuel economy," Ex. 1005 at 1:44-48.

90. Kerns also teaches that its methods for combusting fuel vapors and adjusting the fuel flow based on NOx trap temperature, "decreases emissions." Ex. 1006 at 2:33-42. In my opinion, a POSITA would have been motivated to modify

Hepburn's fuel system to adjust evaporative fuel vapor flow rates based on NOx trap temperature as taught by Kerns to reduce engine emissions.

91. Additionally, a POSITA would be motivated to modify Hepburn based on the teachings of Kerns because they are both in the same field of endeavor as the '166 patent: controlling fuel injection to maintain the temperature of an NOx trap and/or catalytic converter. Ex. 1001 at Abstract; Ex. 1005 at Abstract; Ex. 1006 at Abstract. Hepburn and Kerns both also use similar techniques to solve the same problem as the '166 patent. Hepburn discloses nearly all of the limitations of claim 1-3 of the '166 patent, and Kerns additionally discloses the use of fuel vapors and temperature thresholds claimed in claim 1.

92. In my opinion, a POSITA also would have had a reasonable expectation of success of modifying Hepburn's system based on Kern's teachings regarding the use of fuel vapors and temperature thresholds. Like Kerns, Hepburn discloses measuring NOx trap temperature and purging fuel vapors into an engine's combustion chambers. Ex. 1005 at 4:35-45. A POSITA would understand that the software of Hepburn's conventional-microcomputer engine controller could be modified to allow fuel vapors to enter the engine's combustion chamber when the NOx temperature is between an upper and lower threshold based on the teachings of Kerns. Additionally, Kerns and Hepburn disclose nearly identical engine systems and engine controllers. As shown in annotated Figure 1 from Kerns and below,

Kerns and Hepburn disclose engine systems with nearly identical components. Give the system's similarities, a POSITA would have understood that Hepburn's system could easily be modified to include a fuel vapor purging system coupled to the engine's intake manifold comprising a tube and purge valve connected to the engine's combustion chambers, as taught by Kerns.

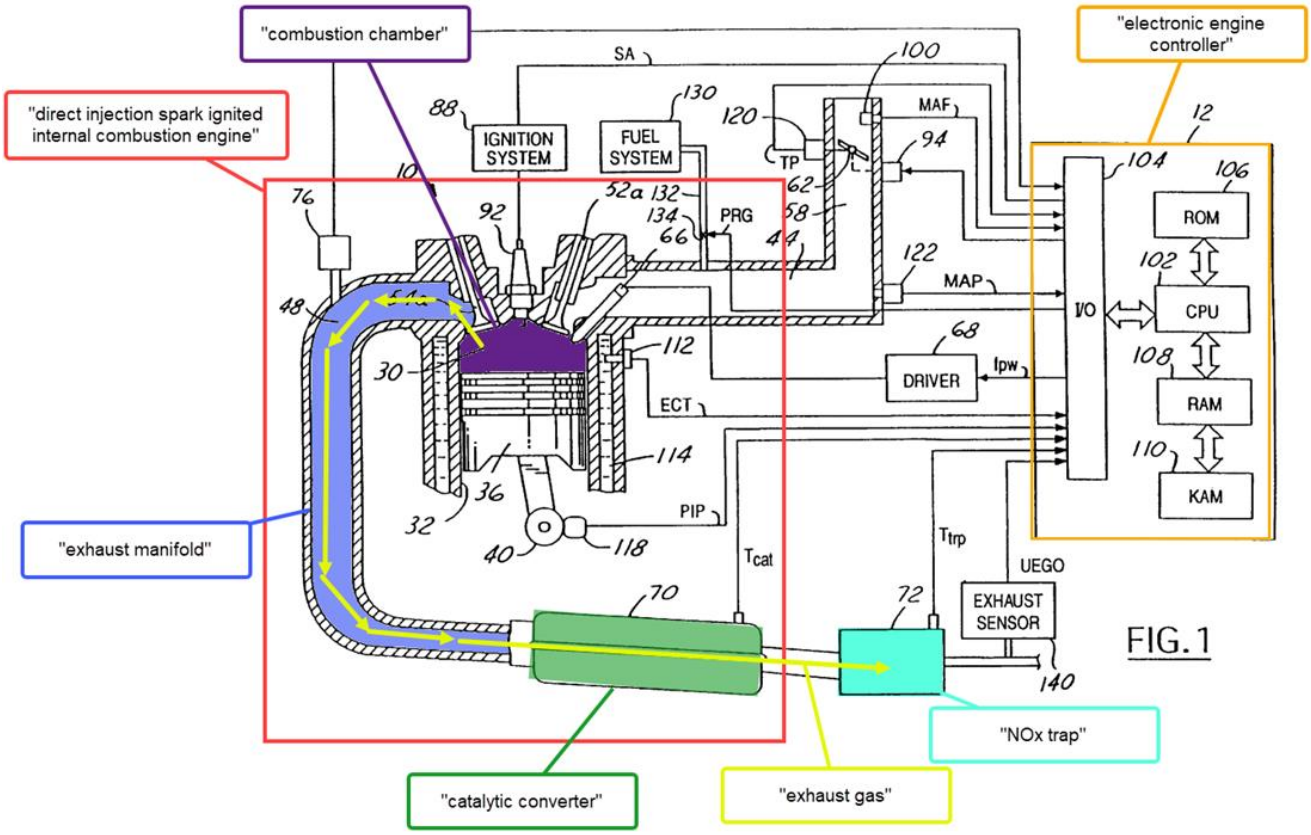

Ex. 1006 at FIG. 1 (annotations added).

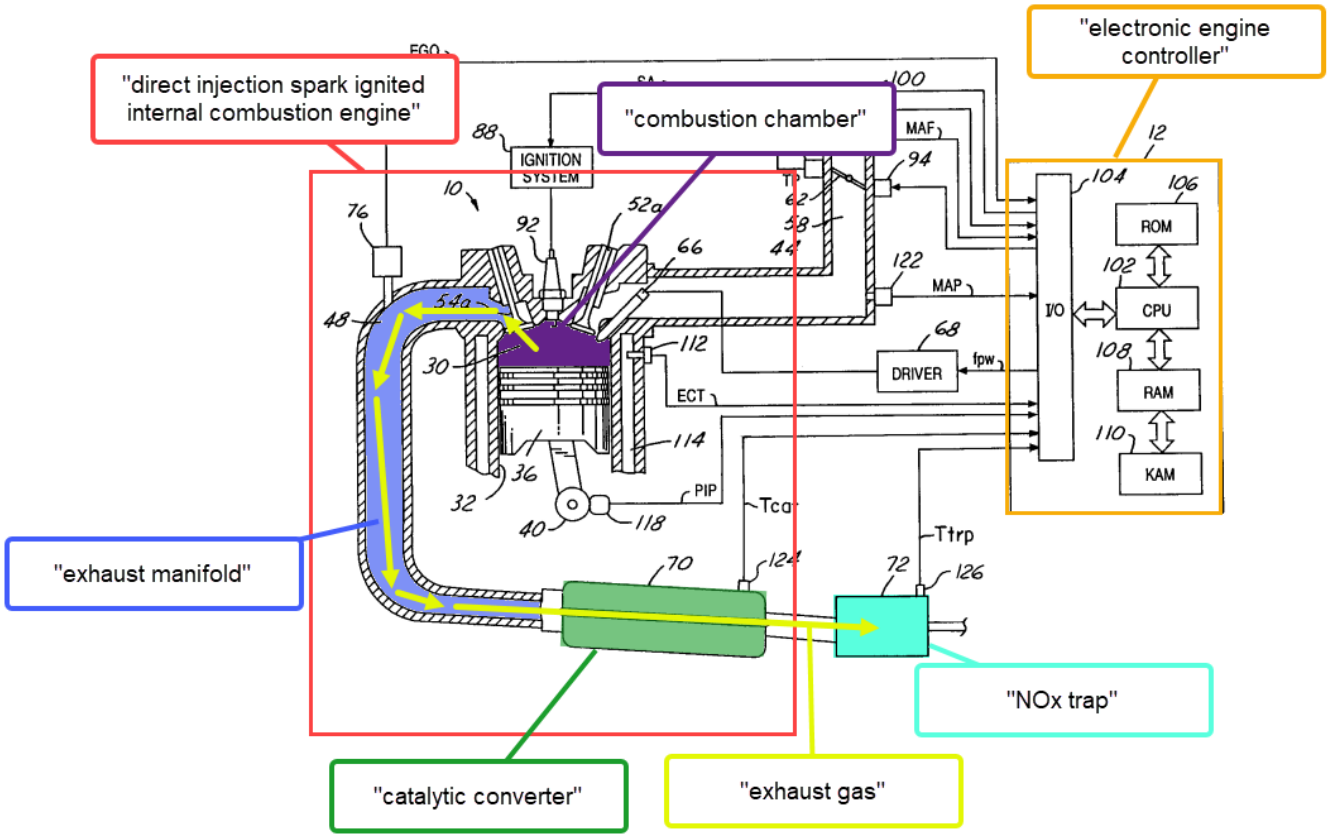

Ex. 1005 at FIG. 1 (annotations added).

B. <u>Claim 1:</u>

1. 1[pre] "A method of controlling a direct injection spark ignited internal combustion engine that is capable of operating in a stratified mode where fuel is injected during a compression stroke of the engine and a homogeneous mode where fuels is injected during an intake stroke of the engine, the internal combustion engine having a catalytic converter and an NOx trap, comprising:"

93. In my opinion, Hepburn discloses a method for controlling a direct injection spark ignited internal combustion engine that is capable of operating in a stratified mode where fuel is injected during a compression stroke of the engine and a homogeneous mode where fuel is injected during an intake stroke of the engine,

the internal combustion engine having a catalytic converter and an NOx trap. Hepburn discloses a "direct injection spark ignition engine" that may be "fueled during a compression stroke . . . for stratified mode operation" or may inject fuel "during [the] intake stroke" during "a homogeneous mode of operation." Ex. 1005 at Abstract, 1:9-27. Annotated in Figure 1 below teaches a direct injection spark ignition engine having both a "catalytic converter 70" and an "NOx trap 72."

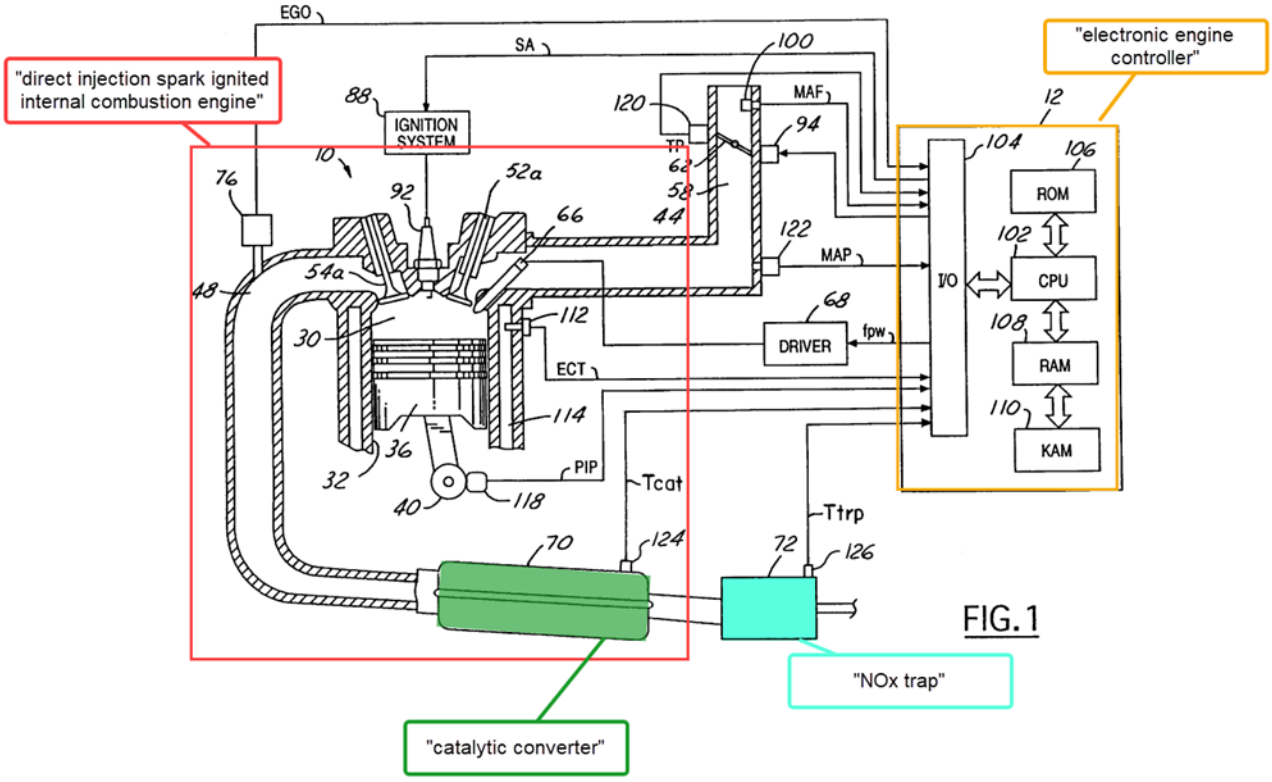

Id. at FIG. 1 (annotations added).

94. Hepburn also teaches "a control method . . . for a spark ignited" engine. *Id.* at 1:49-53.

95. Accordingly, Hepburn discloses the preamble of claim 1.

2. 1[a] "measuring a first temperature of an NOx trap that is in contact with an exhaust gas exhausted from a combustion chamber while the engine is operating in the stratified mode;"

96. I my opinion, Hepburn discloses measuring a first temperature of an NOx trap that is in contact with an exhaust gas exhausted from a combustion chamber while the engine is operating in the stratified mode. As demonstrated by annotated Figure 1 below, Hepburn's NOx trap 72 is downstream from the engine's "exhaust manifold 48" that is itself connected to the "[c]ombustion chamber 30." Ex. 1005 at 2:56-66. Exhaust gas from the combustion chamber is directed from the chamber through the exhaust manifold to the NOx trap. *Id.*

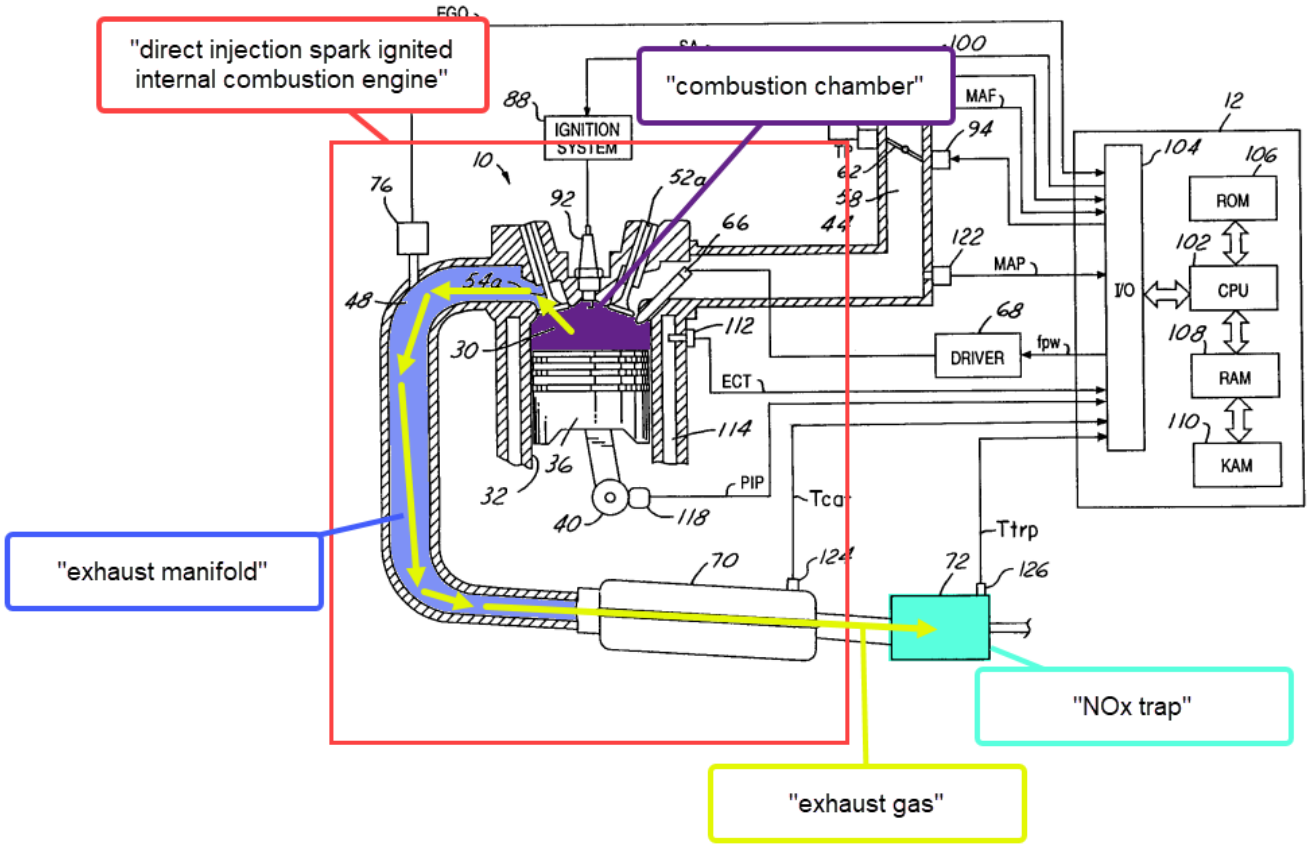

Ex. 1005 at FIG. 1 (annotations added).

97. Annotated Figure 2 below demonstrates Hepburn's engine control method. At step 202, Hepburn teaches that "[w]hen engine 10 is operating in the stratified mode . . . temperature of NOx trap (Ttrp)" "is determined from the Temperature estimator" or, "[a]lternatively the temperature of NOx trap 72 may be provided by [a] temperature sensor 126." Ex. 1005 at 4:38-44. Temperature Ttrp is a first temperature. *Id.*

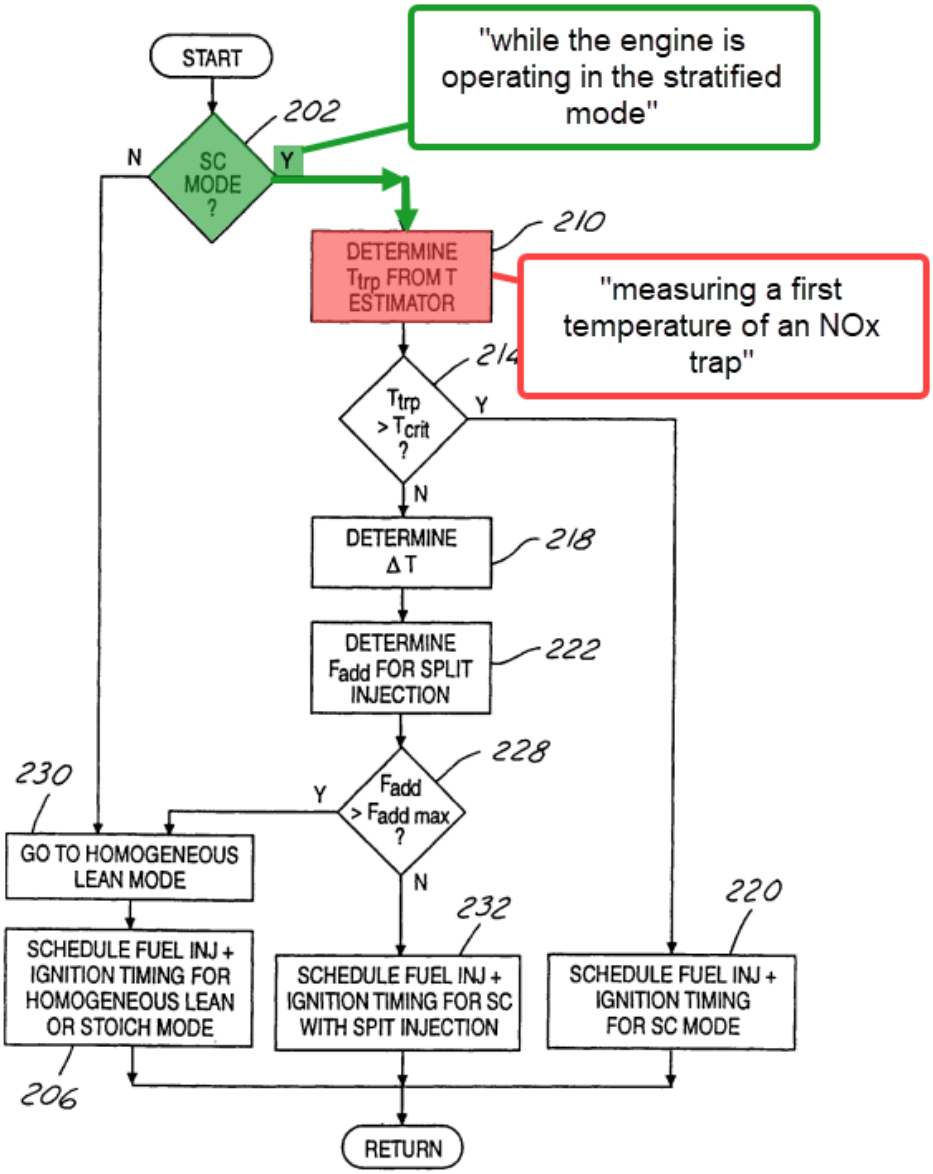

Id. at FIG. 2 (annotations added).

98. Accordingly, in my opinion Hepburn discloses the claim limitation 1[a].

3. 1[b]: "enabling evaporated fuel vapors to enter the combustion chamber at a flow rate while the engine is operating in the stratified mode;"

99. In my opinion, Hepburn in view of Kerns discloses enabling evaporated fuel vapors to enter the combustion chamber at a flow rate while the engine is

operating in the stratified mode. Hepburn teaches that if the engine is operating in the stratified combustion mode and "NOx trap temperature Ttrp is less than critical temperature Tcrit" Hepburn's engine injects . . ."[a]dditional quantity of fuel Fadd . . . during the exhaust stroke of each combustion chamber." *Id.* at 4:38-58. The flow rate of Hepburn's fuel is "proportion[al] to the pulse width of signal fpw." *Id.* at 2:66-3:8.

100. Kerns further teaches enabling evaporated fuel vapors to enter the combustion chamber at a flow rate while the engine is operating in the stratified mode. Kerns teaches "purging fuel vapors" into the engine's combustion chambers "during stratified operation," as shown in annotated Figure 1 below. Ex. 1006 at 2:6-23.

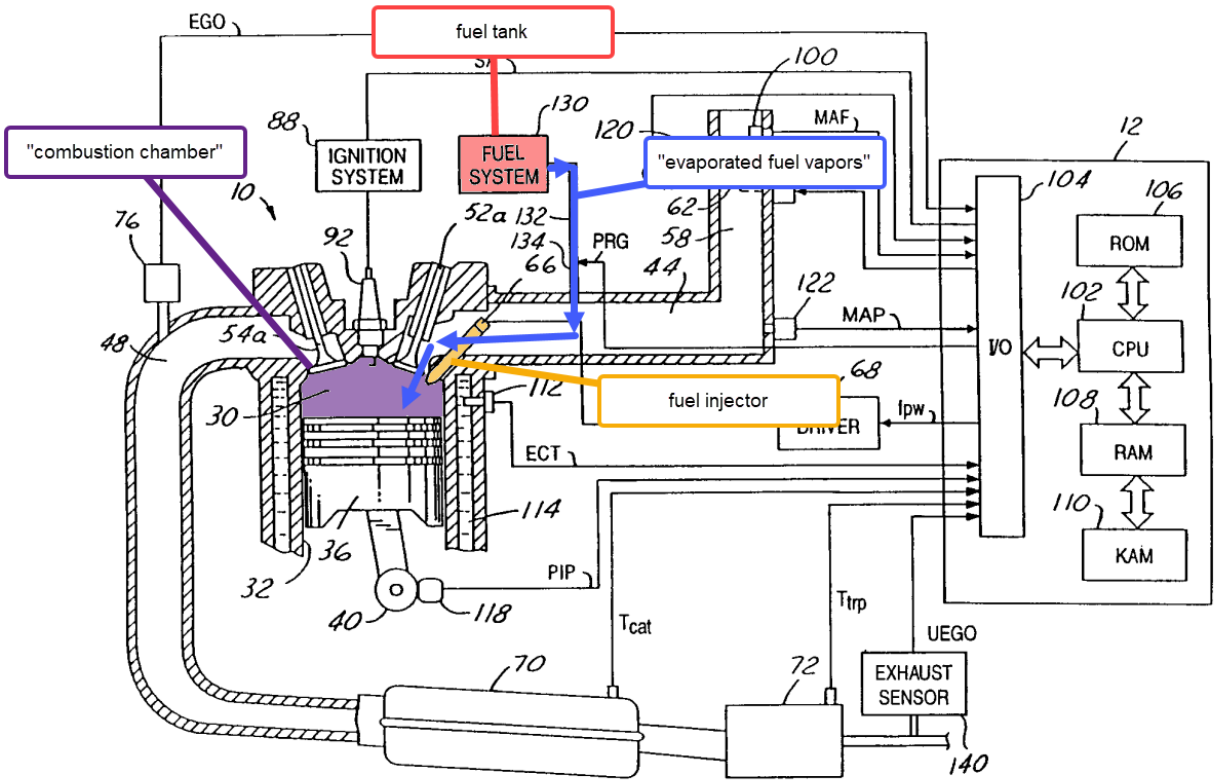

Id. at FIG. 1 (annotations added).

101. The flow rate of Kerns' evaporated fuel vapors is defined by "purge flow rate" $\dot{m}_p$. *Id.* at 9:10-48.

102. In my opinion, a POSITA also would have understood that modifying Hepburn's engine control method based on the teachings of Kerns to allow evaporated fuel vapors to enter the combustion chamber during stratified operation would increase fuel economy and decrease engine emissions. Ex. 1006 at 2:33-42.

103. A POSITA also would have been able to easily modify Hepburn's system based on the teachings of Kerns. A POSITA would understand that the software on in Hepburn's engine controller could be modified to enable fuel vapors

to enter the combustion chamber because Hepburn teaches that its controller is already capable of enabling fuel vapor purging. Ex. 1005 at 4:35-45. Kerns and Hepburn's engine systems are also nearly identical, which would make it easy to modify Hepburn's system based on the teachings of Kerns. Ex. 1005 at FIG. 1; Ex. 1006 at FIG. 1. Give the system's similarities, a POSITA would have understood that Hepburn's system could easily be modified to include a fuel vapor purging system coupled to the engine's intake manifold comprising a tube and purge valve connected to the engine's combustion chambers, as taught by Kerns.

104. Accordingly, in my opinion Hepburn in view of Kerns renders obvious claim limitation 1[b].

4. 1[c]: "measuring a second temperature of the NOx trap while the engine is operating in the stratified mode; and"

105. In my opinion, Hepburn discloses measuring a second temperature of the NOx trap while the engine is operating in the stratified mode. As below in annotated Figure 2 below, Hepburn's method discloses a continuous loop that includes steps where the system's engine controller determines if the engine is operating in the stratified combustion mode, the controller measures the temperature of the NOx trap. Ex. 1005 at 4:38-41. As explained with regard to claim limitation 1[a] above, Hepburn's method measures the first temperature of the NOx trap on the methods first loop. Ex. 1005 at 4:38-41. When the method reaches its

second loop, if the engine is still operating in the stratified mode Hepburn's system measures a second temperature of the NOx trap. Ex. 1005 at 4:38-41.

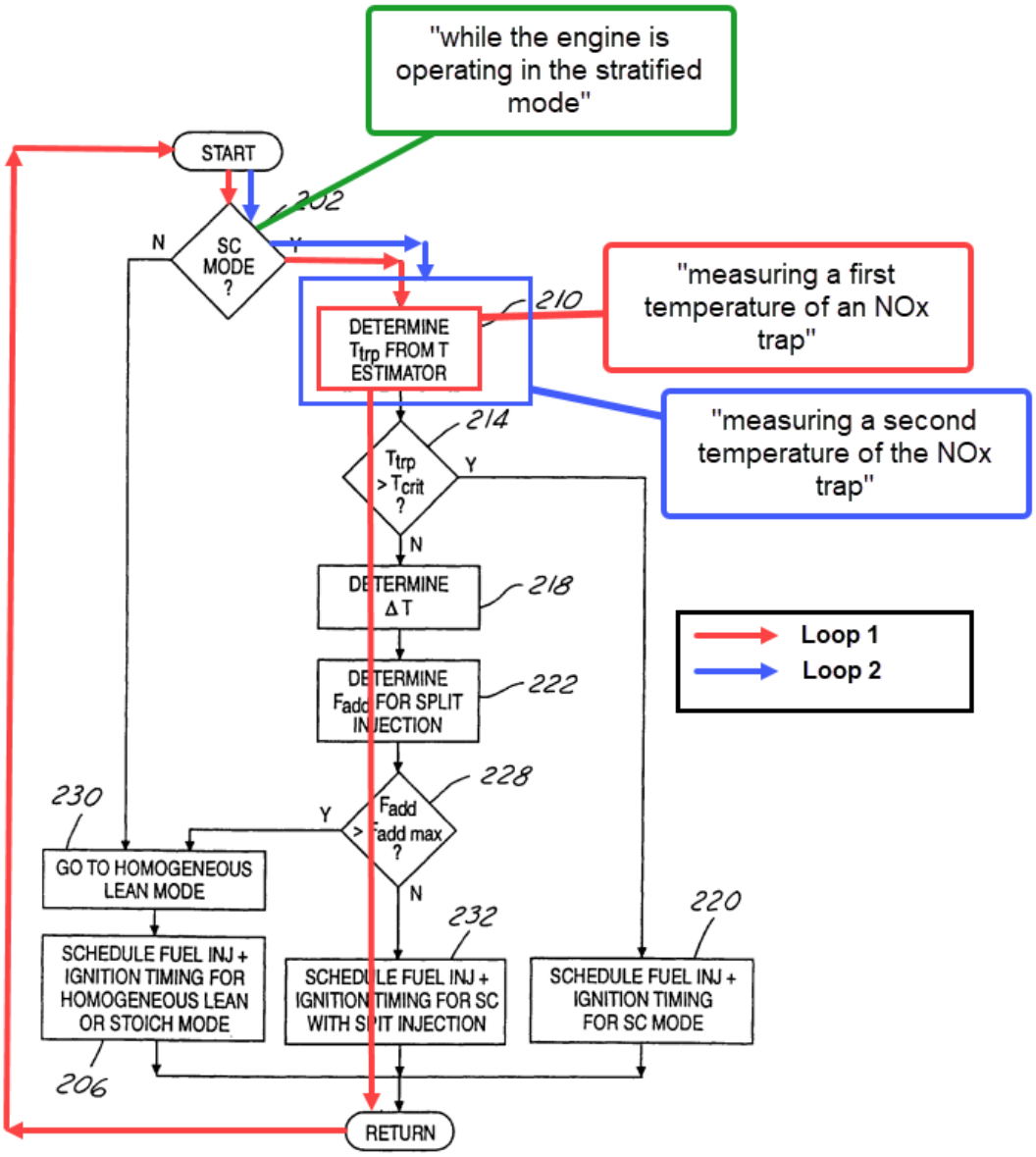

Ex. 1005 at FIG. 2 (annotations added).

106. Accordingly, in my opinion Hepburn discloses the claim limitation 1[c].

5. 1[d]: "adjusting the flow rate of the evaporated fuel vapors as a function of the second temperature when the second temperature is within a lower temperature threshold and an upper temperature threshold."

107. In my opinion, Hepburn in view of Kerns discloses adjusting the flow rate of the evaporated fuel vapors as a function of the second temperature when the second temperature is within a lower temperature threshold and an upper temperature threshold.

108. Hepburn teaches adjusting the engine's fuel flow based on the second NOx trap temperature. On the second loop of Hepburn's method, the system determines whether the engine is in the stratified combustion mode and measures the second temperature of NOx trap 72. Ex. 1005 at 4:39-62. "If [the second] NOx trap temperature . . . is less than critical temperature Tcrit" Hepburn teaches determining the difference between NOx trap temperature Ttrp and Tcrit, called "ΔT." Ex. 1005 at 4:39-62. After calculating ΔT, Hepburn teaches determining a "quantity of fuel Fadd" that is "proportional to ΔT" to be "injected during the exhaust stroke of each combustion chamber." *Id.* Accordingly, as shown in annotated Figure 2 below, Hepburn teaches adjusting the flow rate of fuel as a function of the second temperature.

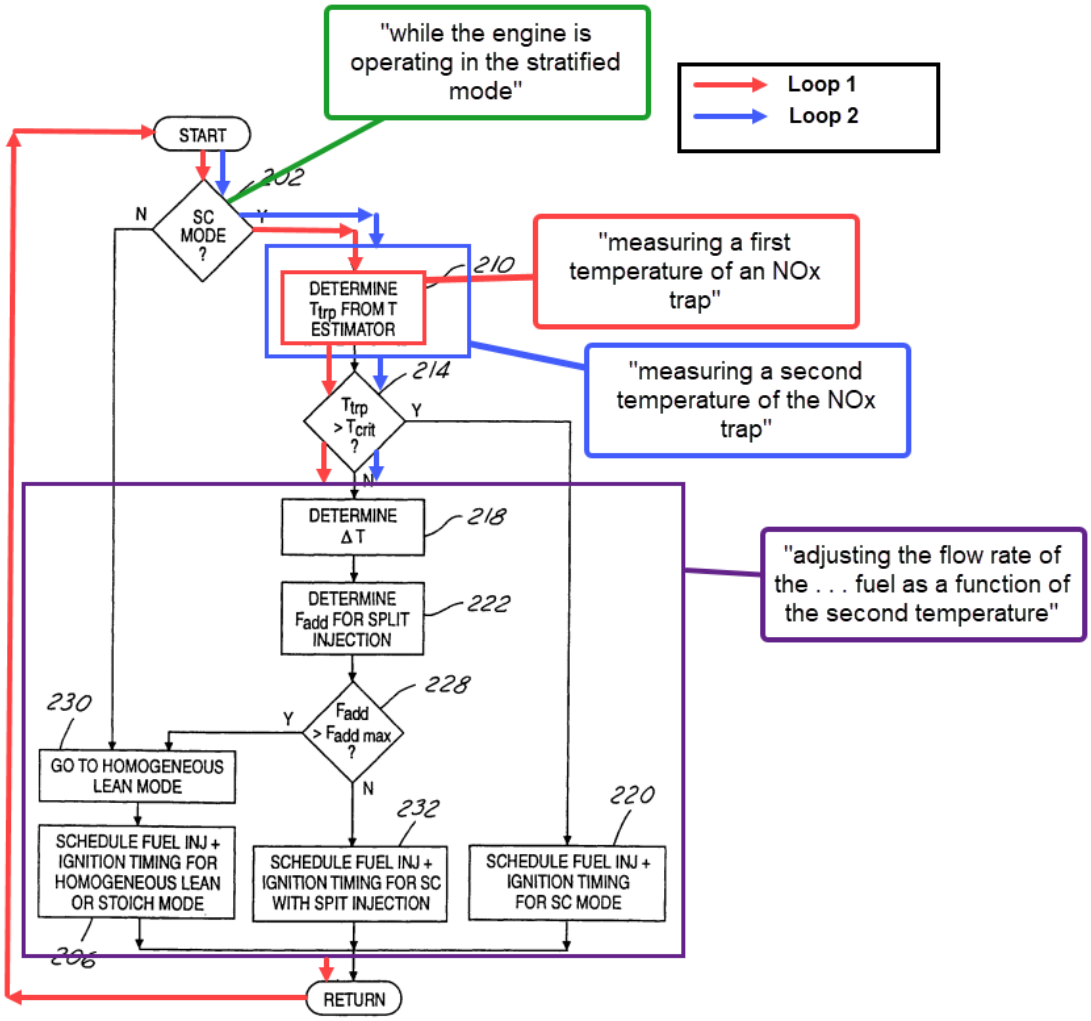

Id. at FIG. 2 (annotations added).

109. As discussed above with respect to claim limitation 1[b], Kerns discloses enabling evaporated fuel vapors to enter the combustion chamber, and a POSITA would have been motivated to modify Hepburn's method to introduce fuel vapors into its combustion chamber based on the teachings of Kerns.

110. Kerns also teaches that the flow rate of its fuel vapors, $\dot{m}_p$, is "controlled via purge valve 134," where the purge valve is controlled by "control signal PRG."

Ex. 1006 at 4:26-29. As shown in the function below, Kerns' flow rate $\dot{m}_p$ is a function of control signal PRG:

$$\dot{m}_p = g(PRG)$$

Id. at 9:10-15.

111. Kerns' also teaches that its control signal PRG, which determines the flow rate of fuel vapors, is calculated based on the NOx trap temperature error e'. *Id.* at 11:8-11. NOx trap temperature error e' is itself calculated as the difference between Tdtrp (the desired NOx trap temperature) and Ttrp (actual NOx trap temperature). Therefore, the flow rate of fuel vapor is a function of the NOx trap temperature.

112. As further shown in annotated Figure 7 below , temperature error e', control signal PRG, and evaporated fuel vapor flow rate $\dot{m}_p$ are each recalculated when Kerns' engine is operating in the stratified combustion mode and actual NOx trap temperature Ttrp is within lower threshold value T1' and upper threshold value T2'. *Id.* at 11:1-38. Because Kerns' method, like Hepburn, runs in a continuous loop, on the second loop of the method taught in Figure 7 Kerns teaches measuring a second temperature of the NOx trap.

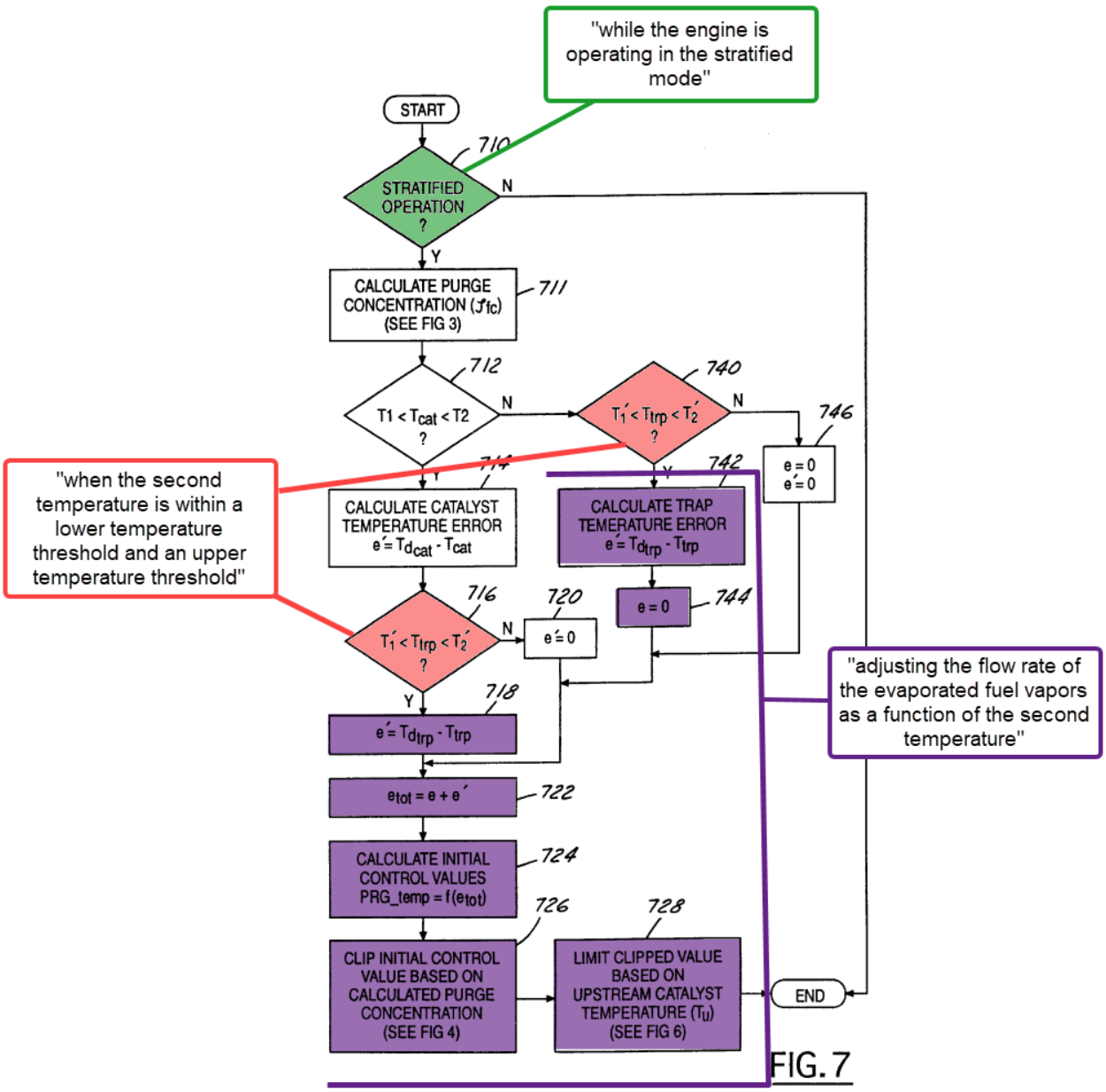

FIG. 7

Id. at FIG. 7 (annotations added).

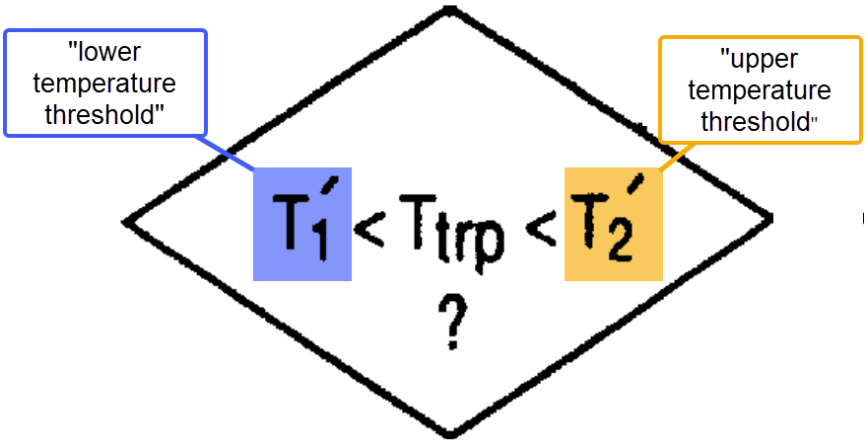

Id.

113. Accordingly, Kerns teaches adjusting the flow rate of the evaporated fuel vapors ($\dot{m}_p$) as a function of the second temperature (Ttrp) when the second temperature is within a lower temperature threshold (T_1') and an upper temperature threshold (T_2').

114. In my opinion, a POSITA also would have understood that modifying Hepburn's engine control method based on the teachings of Kerns to allow evaporated fuel vapors to enter the combustion chamber during stratified operation and adjust the flow of those fuel vapors based on whether an NOx trap temperature is within a lower and upper threshold would increase fuel economy and decrease engine emissions. Ex. 1006 at 2:33-42.

115. A POSITA also would have been able to easily modify Hepburn's system which operates in a continuous control loop (*i.e.* measuring the NOx trap temperature during each control loop) based on the teachings of Kerns. A POSITA

would understand that the software on in Hepburn's engine controller could be modified to enable fuel vapors to enter the combustion chamber because Hepburn teaches that its controller is already capable of enabling fuel vapor purging. Ex. 1005 at 4:35-45. Hepburn also teaches measuring NOx trap temperature, and accordingly the software of Hepburn's engine controller could be modified to enable fuel vapors to enter the combustion chamber when the NOx trap temperature is within a lower temperature threshold and an upper temperature threshold. Kerns and Hepburn's engine systems are also nearly identical, which would make it easy to modify Hepburn's system based on the teachings of Kerns. Ex. 1005 at FIG. 1; Ex. 1006 at FIG. 1. Give the system's similarities, a POSITA would have understood that Hepburn's system could easily be modified to include a fuel vapor purging system coupled to the engine's intake manifold comprising a tube and purge valve connected to the engine's combustion chambers, as taught by Kerns.

116. Accordingly, in my opinion Hepburn in view of Kerns renders obvious claim limitation 1[d].

C. Claim 2: "The method of claim 1, further comprising: switching the engine to the homogeneous mode when the second temperature is below the lower temperature threshold."

117. In my opinion, Hepburn in view of Kerns discloses the method of claim 1 further comprising switching the engine to the homogeneous mode when the second temperature is below the lower temperature threshold.

118. As explained in Section XI.B above, Hepburn in view of Kerns discloses the method of claim 1.

119. Hepburn further discloses that "[w]hen additional fuel Fadd needed to raise NOx trap 72 temperature to the desired temperature is greater than the fuel savings associated with stratified engine operations, engine 10 is switched from the stratified mode to the homogeneous mode." Ex. 1005 at 4:63-67. As described with respect to claim limitation 1[d], Fadd is calculated in proportion to temperature difference ΔT, where ΔT is the amount the NOx trap temperature is below critical temperature Tcrit. Ex. 1005 at 4:39-62. Therefore, when Fadd is larger than Faddmax, the engine is switched to homogenous operation because it is more fuel efficient; there is ***NO*** fuel savings from remaining in the stratified mode when ΔT is sufficiently large, *i.e.*, when NOx temperature Ttrp is below a lower threshold such that it is sufficiently lower than Tcrit. *Id.*

120. Accordingly, in my opinion Hepburn in view of Kerns renders claim 2 obvious.

D. Claim 3: The method of claim 2, further comprising: measuring a fuel level of the evaporated fuel vapors after the switching the engine to the homogeneous mode.

121. In my opinion, Hepburn in view of Kerns discloses the method of claim 2 further comprising measuring a fuel level of the evaporated fuel vapors after

switching the engine to the homogeneous mode. As explained in Section XI.C above, Hepburn in view of Kerns discloses the method of claim 2.

122. Kerns also teaches that "[a]s the engine switches to the homogeneous mode, the new fuel flow rate from the fuel injectors . . . is found as:

$$\dot{m}_{f_h} = \dot{m}_{f_{stoich}} - \rho_f \dot{m}_p$$

when fuel vapor purge is continued in the homogeneous mode." Ex. 1006 at 8:15-22.

123. As shown in the formula above, Kerns teaches calculating a new fuel flow rate $\dot{m}_{fh}$ based on an input ρ_f, which Kerns teaches is the "fuel vapor concentration." *Id.* at 5:5-8, 8:15-22. Fuel vapor concentration ρ_f is itself calculated based on the formula below:

$$\rho_f = \frac{\dot{m}_p + \dot{m}_a - \lambda S \dot{m}_f}{\dot{m}_p (1 + \lambda S)}$$

Id. at 5:10-14.

124. Kerns teaches that λ in the above formula, which is used to calculate fuel vapor concentration when the engine switches to homogeneous mode, "is measured relative air/fuel ratio in the exhaust," correlates to the measured fuel level of the evaporated fuel vapors. *Id.* at 5:14-24. Collectively, Kerns discloses that after the engine switches to the homogeneous combustion mode, the system

measures relative air/fuel ratio λ, which is used to determine the measured fuel level of the evaporated fuel vapors, and from this measured fuel level, how to calculate the new fuel vapor flow rate.

125. In my opinion, a POSITA also would have understood that modifying Hepburn's engine control method based on the teachings of Kerns to measure the level of evaporative fuel vapors available when operating the engine in a homogeneous mode would increase fuel economy and decrease engine emissions. Ex. 1006 at 2:33-42.

126. A POSITA also would have been able to easily modify Hepburn's system based on the teachings of Kerns. A POSITA would understand that the software on in Hepburn's engine controller could be modified to enable evaporative fuel vapors to enter the combustion chamber because Hepburn teaches that its controller is already capable of enabling fuel vapor purging. Ex. 1005 at 4:35-45. Hepburn also already discloses an exhaust gas oxygen sensor, and the code in Hepburn's engine controller could easily be modified to read data from the exhaust gas oxygen sensor when the engine is operating in the homogeneous combustion mode. *Id*. at 3:20-21 , 4:35-45. Kerns and Hepburn's engine systems are also nearly identical, which would make it easy to modify Hepburn's system based on the teachings of Kerns. Ex. 1005 at FIG. 1; Ex. 1006 at FIG. 1.

127. Accordingly, in my opinion Hepburn in view of Kerns renders obvious claim 3.

XIII. GROUND 2: THE COMBINATION OF HEPBURN, KERNS, AND KAINZ RENDERS OBVIOUS CLAIMS 4 AND 5.

A. Motivation to Combine Hepburn, Kerns, and Kainz

128. In my opinion, a POSITA would have been motivated to modify the system and methods combining Hepburn and Kerns described in IX.A above to include the method of the continuous calibration of a universal exhaust gas oxygen sensor based on the teachings of Kainz; that "enables improved fuel control performance." *Id.*

129. Kainz teaches "[a]n improved fuel control in which the transfer function of a wide-range exhaust gas oxygen sensor is automatically and periodically learned or re-learned in the course of vehicle operation." Ex. 1007, Abstract. Kainz explains that if the transfer function of the UEGO sensor is not continuously updates, "the sensor characteristics may tend to drift with age and/or other factors, leading to fuel control errors" not accounted for by "one-time calibration." Ex. 1007 at 1:40-3. Therefore, continuously updating the UEGO (wide-range exhaust gas) sensor of Kerns as applied to Hepburn's engine would increase the sensors accuracy and result in the engine operating in the stratified mode for the longest time—providing maximum fuel economy while producing minimal emissions.

130. Hepburn teaches utilizing an exhaust oxygen sensor while Kerns discloses a universal exhaust gas oxygen (UEGO) sensor; Kainz teaches using both in synergy to provide the best transfer function for the UEGO sensor. Kerns depends on this calibration for an accurate estimation of the fuel level in the evaporative fuel vapors. Modifying Hepburn in view of Kerns and Kainz would be a natural combination by a POSITA; Hepburn, Kerns and Kainz are all in the same field of endeavor—providing improved fuel control for optimizing fuel economy while controlling emissions.

131. In my opinion, a POSITA would be motivated to modify Hepburn's systems and methods to include a universal exhaust gas oxygen sensor based on the teachings of Kerns and then implementing the automatically learning/relearning of the universal exhaust gas transfer function taught by Kainz; because an accurate UEGO sensor would improve fuel control performance, which would also enable improved control of the NOx trap temperature and fuel economy.

132. Additionally, a POSITA would be motivated to modify the Hepburn-Kerns combination based on the teachings of Kainz because they are all in the same field of endeavor as the '166 patent: controlling fuel injection based on the temperature of an emission control device, such as a catalytic converter or an NOx trap. Ex. 1001 at Abstract; Ex. 1005 at Abstract; Ex. 1006 at Abstract; Ex. 1007 at Abstract. Hepburn, Kerns, and Kainz also use similar techniques to solve the same

problem as the ’166 patent. For example, Hepburn discloses nearly all of the limitations of claims 1-5 of the ’166 patent; Kerns discloses the use of fuel vapors and temperature thresholds claimed in claim 1, measuring fuel levels as claimed in claim 3, and the universal exhaust gas oxygen sensor of claim 5; and Kainz discloses a function for using a universal exhaust gas oxygen sensor to measure fuel levels, as claimed in claim 5.

133. A POSITA also would have had a reasonable expectation of success of modifying the Hepburn-Kerns combination based on the teachings of Kainz. Hepburn already teaches using an exhaust gas oxygen sensor coupled to its exhaust manifold upstream of its catalytic converter while Kerns teaches the use of a UEGO. Finally, Kainz teaches the use of both sensors at the same locations to automatically re-learn the UEGO transfer function. Ex. 1005 at 3:20-31, FIG. 1; Ex. 1007 at 2:64-3:5, FIG. 1. Therefore, a POSITA would easily be able to modify Hepburn’s system to include a universal exhaust gas oxygen sensor. A POSITA would also understand that the code in Hepburn’s electronic engine controller could easily be modified to read additional signals and data from the universal exhaust gas oxygen sensor and update the UEGO transfer function as based on the teachings of Kainz.

B. <u>Claim 4:</u> "The method of claim 3, wherein the measuring the fuel level comprises measuring the fuel level via an exhaust gas oxygen sensor."

134. In my opinion, Hepburn in view of Kerns and Kainz discloses the method of claim 4, wherein the measuring the fuel level comprises measuring the fuel level via an exhaust gas oxygen sensor.

135. As explained in Section XI.D above, Hepburn in view of Kerns renders obvious claim 3. Kerns also teaches an "[e]xhaust gas oxygen sensor 76" "coupled to exhaust manifold 48" that measures "a relative air fuel ratio λ." Ex. 1006 at 3:22-28. As explained in the previous section, the "relative air fuel ratio λ" acquired from the exhaust gas oxygen sensor can be used to determine the fuel level of the evaporative fuel vapors. *Id.*

136. Similarly, Kainz discloses "[a]n improved fuel control in which the transfer function of a wide-range exhaust gas oxygen sensor," also known as a universal exhaust gas oxygen sensor, "is automatically and periodically learned or re-learned in the course of vehicle operation" to measure fuel levels using the sensor. Ex. 1007, Abstract.

137. In my opinion, a POSITA also would have understood that modifying Hepburn's engine control method based on the teachings of Kerns and Kainz to measure the fuel level of the evaporative fuel vapors available via an exhaust gas oxygen sensor with a continuously updated transfer function would increase fuel

economy and decrease engine emissions. Ex. 1007 at 1:27-34; Ex. 1006 at 2:33-42.

138. A POSITA also would have been able to easily modify Hepburn's system based on the teachings of Kerns and Kainz. A POSITA would understand that the software on Hepburn's engine controller could be modified to enable fuel vapors to enter the combustion chamber because Hepburn teaches that its controller is already capable of enabling fuel vapor purging. Ex. 1005 at 4:35-45. Hepburn also already discloses an exhaust gas oxygen sensor, and the code in Hepburn's engine controller could easily be modified to read data from Kerns universal exhaust gas oxygen sensor when the engine is operating in the homogeneous combustion mode. Kerns and Hepburn's engine systems are also nearly identical and would contain all the physical components necessary for Kainz, which would make it easy to modify Hepburn's system based on the teachings of Kerns and Kainz. Ex. 1005 at FIG. 1; Ex. 1006 at FIG. 1.

139. Accordingly, in my opinion Hepburn in view of Kerns and Kainz renders obvious claim 4.

C. <u>Claim 5:</u> "The method of claim 4, wherein the measuring the fuel level comprises measuring the fuel level with an universal exhaust gas oxygen sensor."

140. In my opinion, Hepburn in view of Kerns and Kainz discloses the method of claim 5, wherein the measuring the fuel level comprises measuring the fuel level with an universal exhaust gas oxygen sensor.

141. As explained in Section XII.B above, Hepburn in view of Kerns and Kainz discloses the method of claim 4. Kerns discloses that its exhaust gas oxygen sensor 76 provides "signal UEGO," *i.e.*, it is a universal exhaust gas oxygen sensor. Ex. 1006 at 3:22-28; Ex. 1003 at ¶¶ 192-195. Kainz further discloses a fuel emissions system that includes a "universal exhaust gas oxygen sensor," and determining transfer functions for using the sensor to measure fuel levels. Ex. 1007 at Abstract, 1:27-31, 2:64-3:5.

142. In my opinion, a POSITA also would have been motivated to modify the Hepburn-Kerns combination based on the teachings of Kainz to automatically update the universal exhaust gas oxygen sensor transfer function to provide the most accurate measurement of the fuel levels of the evaporative fuel vapors because it would "enable[] improved fuel control performance." Ex. 1007 at 1:27-34.

143. A POSITA also would understand that Hepburn's system could easily be modified based on the teachings of Kerns and Kainz to include a universal exhaust gas oxygen sensor with a method to automatically learn or re-learn the UEGO

transfer function because Hepburn's system already discloses an exhaust gas oxygen sensor, and the software in Hepburn's engine controller could be modified to read signals and data from a universal exhaust gas oxygen sensor and apply a transfer-function determining method based on the teachings of Kainz.

144. Accordingly, in my opinion Hepburn in view of Kerns and Kainz renders obvious claim 5.

XIV. GROUND 3: THE COMBINATION OF KERNS AND TAKAHASHI RENDERS OBVIOUS CLAIMS 1-5

145. A POSITA at the time of the alleged invention would have found claims 1-5 obvious over Kerns in view of Takahashi.[2]

A. Motivation to Combine Kerns with Takahashi

146. In my opinion, a POSITA in possession of Kerns' fuel injection methods would have been motivated to modify Kerns' method to operate a continuous loop that measures a first and second temperature of an NOx trap based on the teachings of Takahashi.

147. Takahashi teaches that continuously monitoring the temperature of catalytic treatment devices, including a catalytic converters or NOx traps, and adjusting fuel injection based on the monitored temperature enables the catalyst to

[2] The PTAB previously found it was reasonably likely that Kerns alone invalidates claims 1-5. *Volkswagen Group of America, Inc. v. Michigan Motor Technologies LLC*, IPR2020-00452, Paper 12 at 33-40 (PTAB Sept. 9, 2020).

discharge captured oxides without impairing the catalyst's durability. Ex. 1008 at 1:49-54. Takahashi's routine that continuously measures the temperature of a catalytic treatment devices, determines if temperature of the device exceeds a threshold, and then, based on whether the temperature exceeds the threshold and the catalyst is in need of sulfur oxide cleaning, adjusts the fuel flow to be rich. *Id.* at 10:30-57. A POSITA would be motivated to modify Kerns' method to continuously monitor catalyst temperature based on the teachings of Takahashi to increase the durability of Kerns' catalyst by minimizing sulfur poisoning.

148. Additionally, a POSITA would be motivated to combine the teachings of Kerns and Takahashi because they are both in the same field of endeavor as the '166 patent: controlling fuel injection to maintain the temperature of an NOx trap and/or catalytic converter. Ex. 1001 at Abstract; Ex. 1006 at Abstract; Ex. 1008 at Abstract. Kerns and Takahashi both also use similar techniques to solve the same problem as the '166 patent. For example, Kerns discloses nearly all of the limitations of claims 1-5 of the '166 patent, and Takahashi discloses measuring a second temperature of an NOx trap and adjusting fuel flow as a function of that temperature as claimed in claim 1.

149. In my opinion, a POSITA also would have had a reasonable expectation of success of modifying Kerns' engine control system to continuously monitor catalyst temperature based on the teachings of Takahashi because Kerns already

teaches methods for adjusting fuel flow based on the temperature of an NOx trap. Ex. 1006 at FIG. 7.

150. A POSITA would also understand that the software in Kerns' conventional-microcomputer engine controller could be modified to repeatedly measure the NOx trap temperature and adjust fueling based on the temperature as taught by Takahashi by repeating the methods already disclosed by Kerns.

B. <u>Claim 1</u>

1. 1[pre] "A method of controlling a direct injection spark ignited internal combustion engine that is capable of operating in a stratified mode where fuel is injected during a compression stroke of the engine and a homogeneous mode where fuels is injected during an intake stroke of the engine, the internal combustion engine having a catalytic converter and an NOx trap, comprising:"

151. In my opinion, Kerns discloses a method of controlling a direct injection spark ignited internal combustion engine that is capable of operating in a stratified mode where fuel is injected during a compression stroke of the engine and a homogeneous mode where fuels is injected during an intake stroke of the engine, the internal combustion engine having a catalytic converter and an NOx trap.

152. Kerns teaches a "direct injection spark ignition engine" capable of "operating in a stratified mode where fuel is injected directly into cylinder 30 during a compression stroke" or in a "homogeneous mode" where the "fuel injector 66" is activated "during the intake stroke." Ex. 1006 at Abstract, 1:26-20. Annotated

Figure 1 of Kerns below demonstrates Kerns engine system, including a direct injection spark ignition engine having a an "NOx trap 72" and a "catalytic converter 70." 3:21-65.

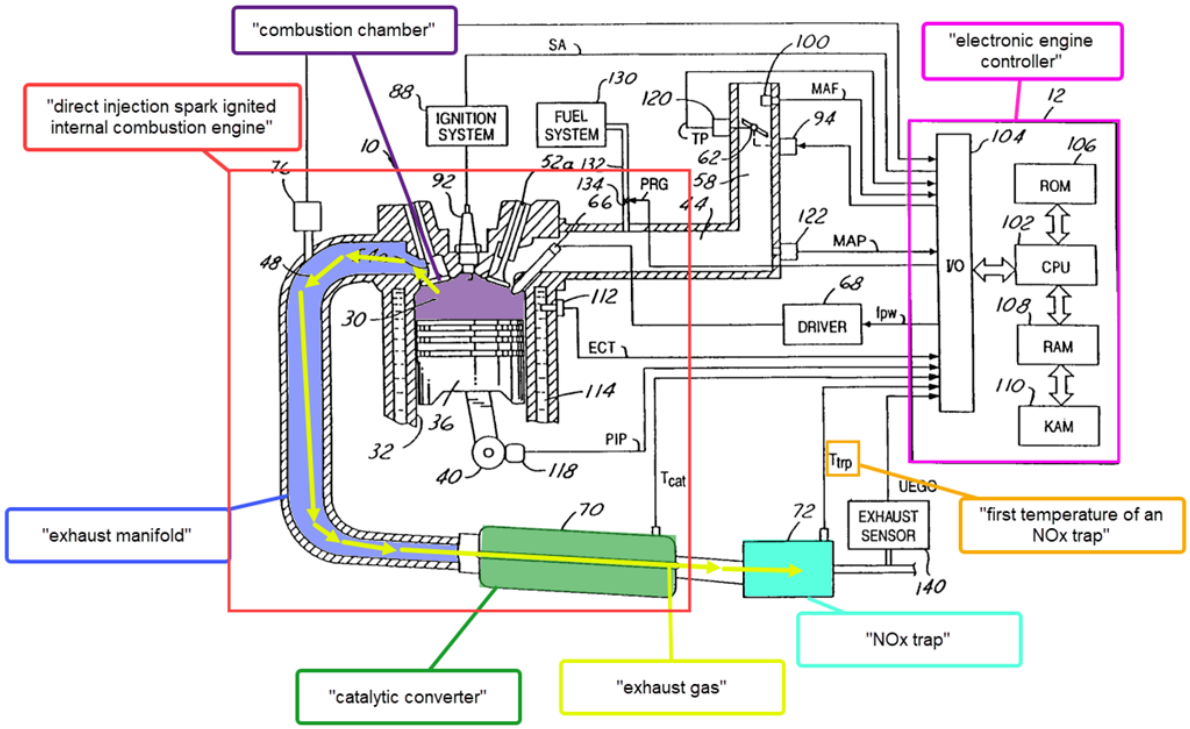

Id. at FIG. 1 (annotations added).

153. Kerns also teaches an "engine control method." *Id*. at 1:1-2.

154. Accordingly, in my opinion Kerns discloses the preamble of claim 1.

2. <u>1[a] "measuring a first temperature of an NOx trap that is in contact with an exhaust gas exhausted from a combustion chamber while the engine is operating in the stratified mode;"</u>

155. In my opinion, Kerns teaches measuring a first temperature of an NOx trap that is in contact with an exhaust gas exhausted from a combustion chamber while the engine is operating in the stratified mode.

156. As annotated Figure 1 of Kerns below, Kerns system include an NOx trap 72 that is downstream from an "exhaust manifold 48" that is connected to "[c]ombustion chamber 30." Ex. 1006 at 2:59-3:66. Exhaust gas flows from the engine's combustion chamber through the exhaust manifold and to the NOx trap. *Id.*

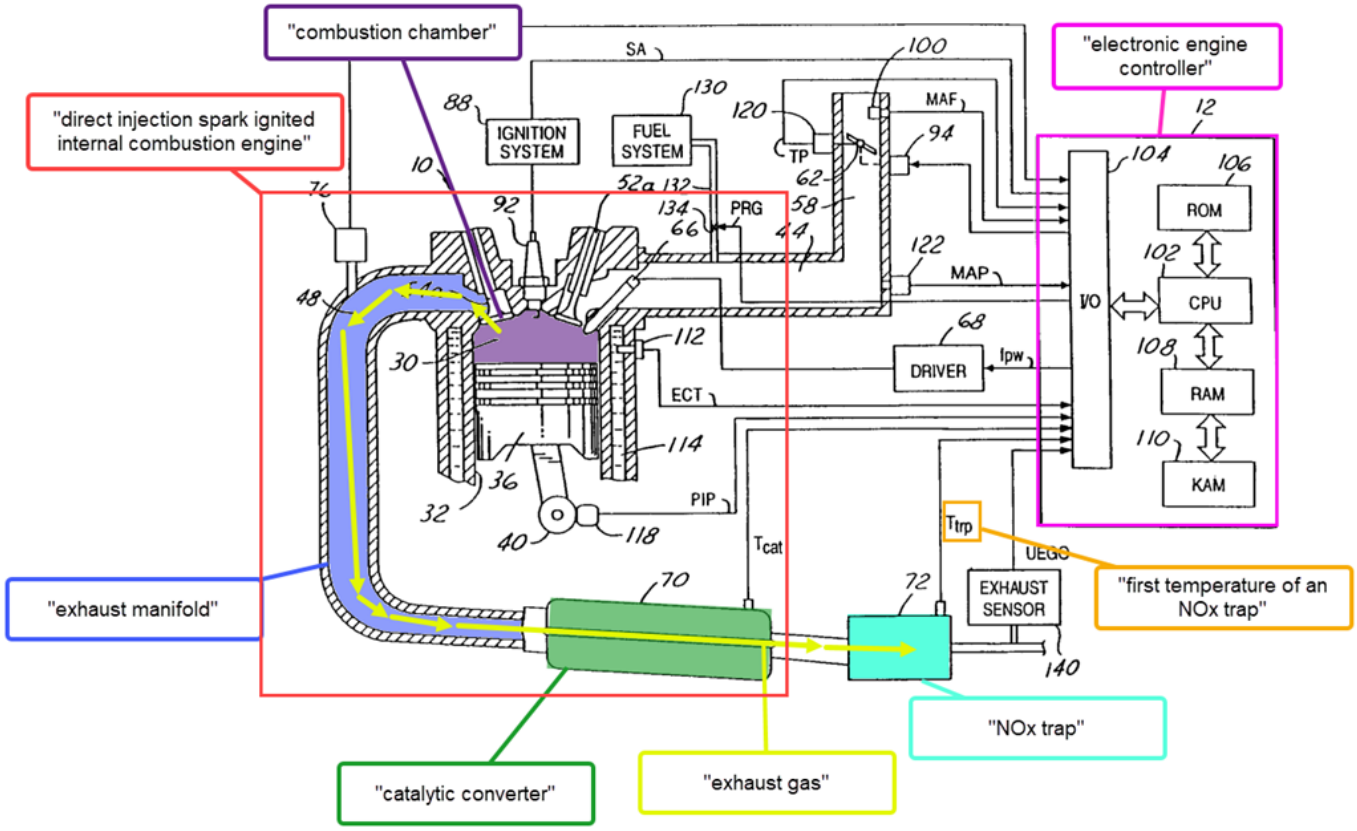

Ex. 1006 at FIG. 1 (annotations added).

157. Kerns also teaches a method for controlling fuel delivery based on NOx trap temperature, as shown in annotated Figure 7 below. In the methods first step 710, "a determination is made as to whether engine 10 is operating in a stratified mode where fuel is injected directly into cylinder 30 during a compression stroke."

Id. at 10:51-53. When the engine is operating in the stratified combustion mode, at step 716 the method "determin[es] . . . whether temperature Ttrp of NOx trap 72 is between threshold values T1' and T2'." *Id.* at 11:1-3. Accordingly, Kerns By disclosing measuring temperature Ttrp of NOx trap 72 to compare the temperature to values T1' and T2'. *Id.* Kerns discloses that NOx trap temperature Ttrp may be measured by a "temperature sensor." Ex. 1006 at 4:18-24. Measuring NOx trap temperature Ttrp at step 716 constitutes measuring a first temperature of an NOx trap.

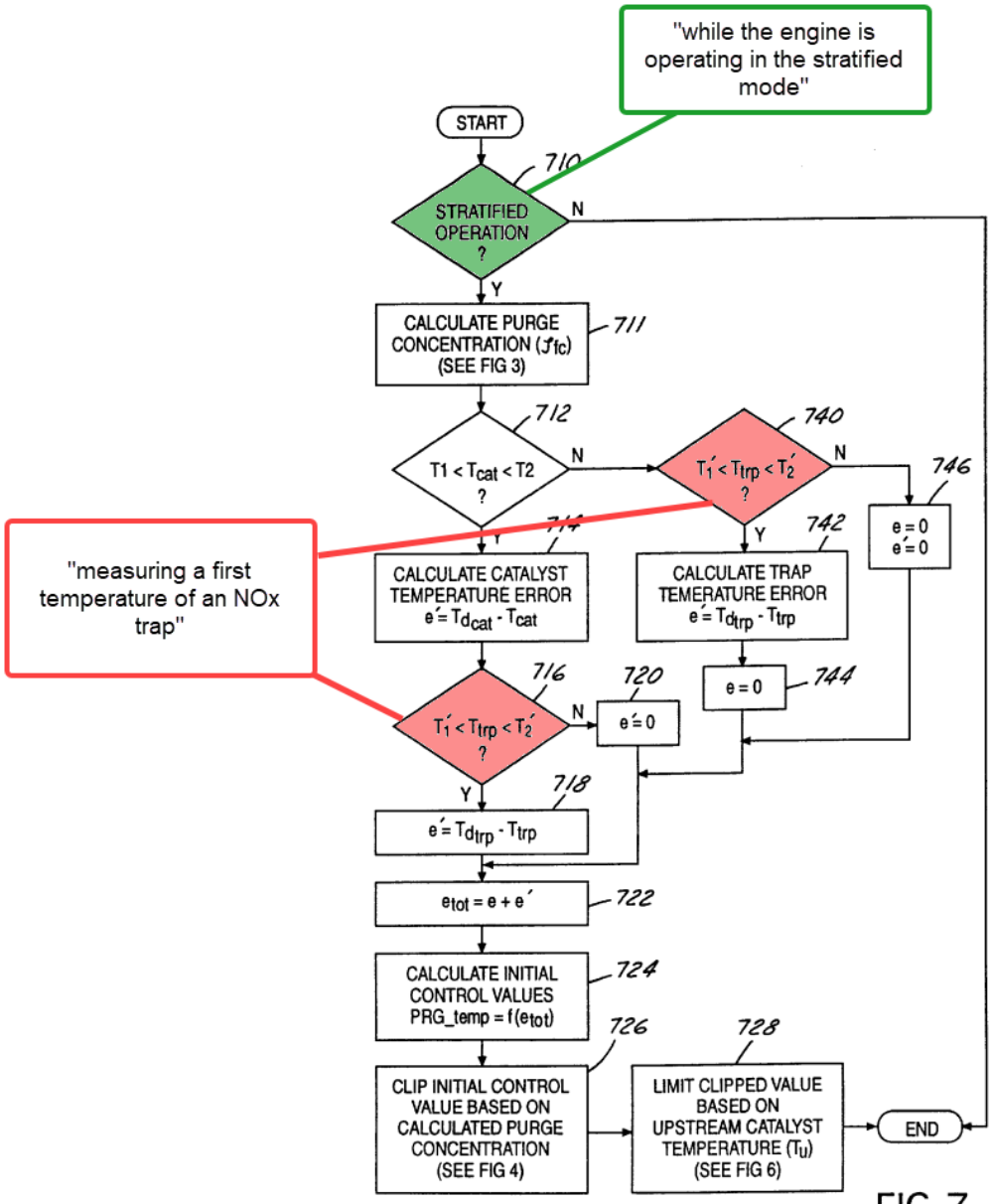

FIG. 7

Id. at FIG. 7 (annotations added);

158. Accordingly, in my opinion Kerns discloses the claim limitation 1[a].

3. 1[b]: "enabling evaporated fuel vapors to enter the combustion chamber at a flow rate while the engine is operating in the stratified mode;"

159. In my opinion, Kerns teaches enabling evaporated fuel vapors to enter the combustion chamber at a flow rate while the engine is operating in the stratified mode.

160. Kerns system "purg[es] fuel vapors into the combustion chamber" "during stratified operation." Ex. 1006 at 2:6-23.

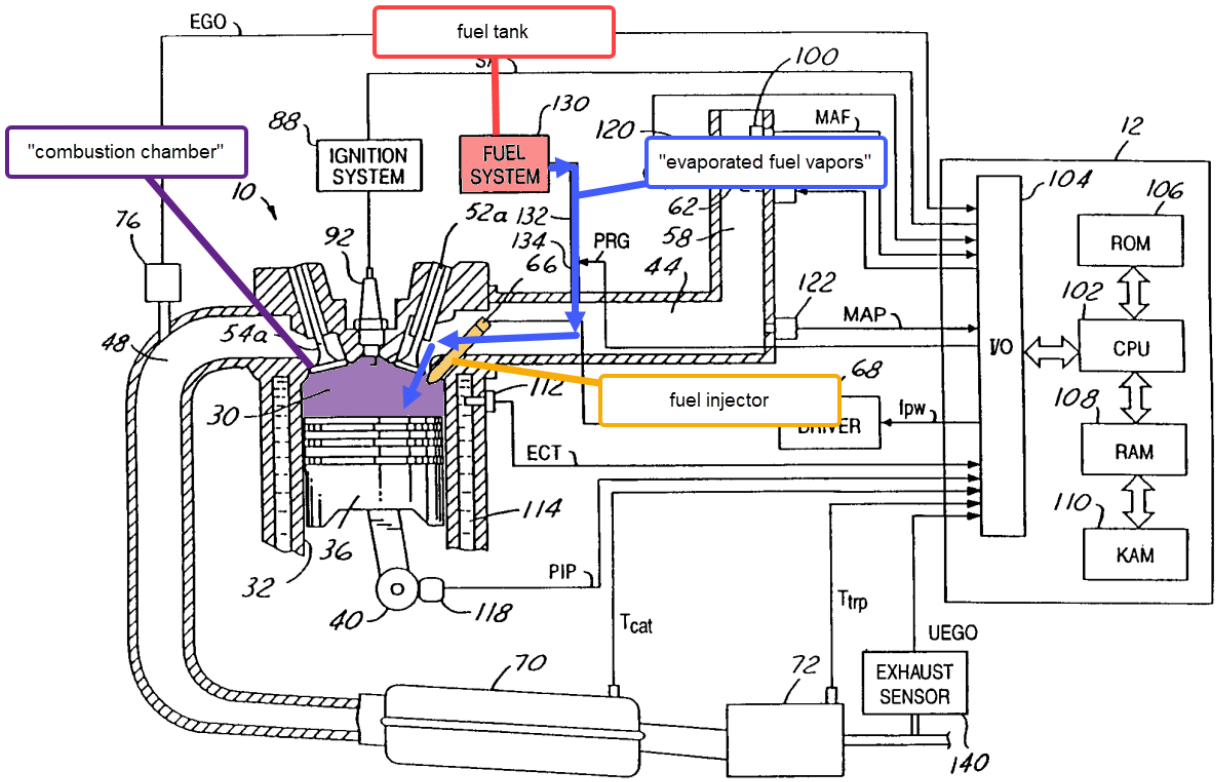

Id. at FIG. 1 (annotations added).

161. The "purge flow rate" of Kerns' fuel vapors is defined by variable $\dot{m}_p$. *Id*. at 9:10-48. Kerns' $\dot{m}_p$ constitutes a flow rate at which the evaporated fuel vapors enter the combustion chamber.

162. Accordingly, in my opinion Kerns discloses claim limitation 1[b].

4. 1[c]: "measuring a second temperature of the NOx trap while the engine is operating in the stratified mode; and"

163. In my opinion, Kerns in view of Takahashi discloses measuring a second temperature of the NOx trap while the engine is operating in the stratified mode.

164. As shown in annotated Figure 7 of Kerns below when "engine 10 is operating in a stratified mode where fuel is injected directly into cylinder 30 during a compression stroke," NOx trap temperature Ttrp is measured, and "a determination is made as to whether temperature Ttrp of NOx trap 72 is between threshold values T1' and T2'." *Id*. at 4:18-24, 10:51-53, 11:1-3.

165. Kerns also teaches that its methods, including the one taught in Kerns' Figure 7, run in a continuous loop. Kerns discloses that its methods "purg[e] fuel vapors into the combustion chamber when" NOx trap temperature "is below a predetermined threshold." Ex. 1006 at 2:6-8. Kerns' methods would need to continuously measure the NOx trap temperature to determine when the NOx trap temperature "is below a predetermined threshold." As shown below, on the second

loop of Kerns' method taught in Figure 7 Kerns discloses measuring a second temperature of the NOx trap.

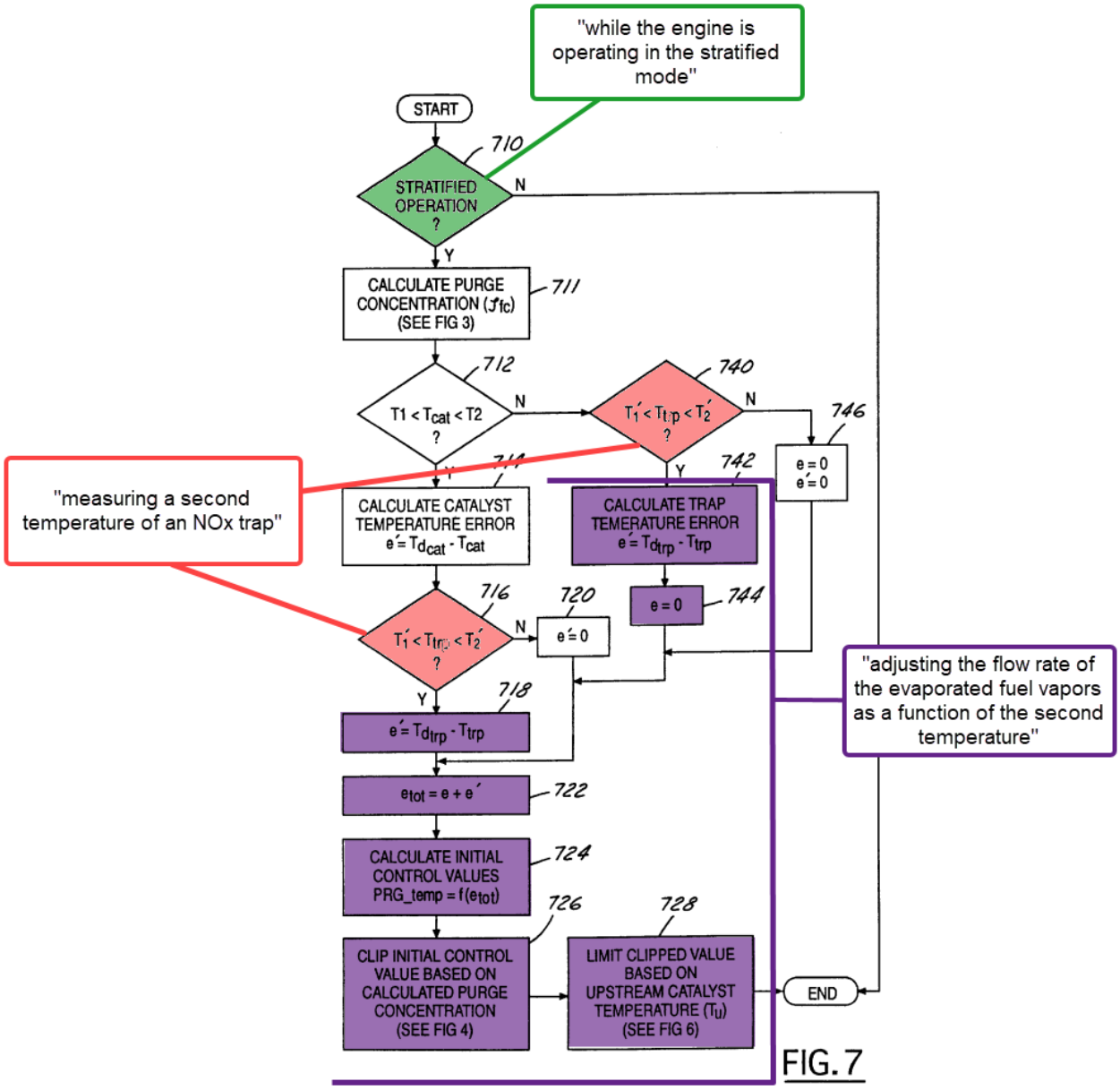

Id. at FIG. 7 (annotations added).

166. Like Kerns, Takahashi also discloses measuring a second temperature of an NOx trap. Takahashi teaches "a catalyst . . . disposed in an exhaust passage . . .

of an internal combustion engine . . . for trapping nitrogen oxides," which is an NOx trap. Ex. 1008 at Abstract, 2:54-64. Takahashi also teaches a method for controlling "catalyst temperature" for "an internal combustion engine." *Id.* Takahashi's method performs an "air-fuel ratio rich condition determining routine" "every 10 milliseconds." *Id.* at 10:30-32. One embodiment of Takahashi's control routine is shown in Takahashi's annotated Figure 6 below. Takahashi's routine measures catalyst temperature Tcat, determines whether Tcat exceeds the temperature threshold Tcat2. *Id.* at 10:30-57. If Tcat exceeds the threshold, the routine sets the flag Frich to 1 to indicate the air/fuel ratio will be enriched. *Id.*

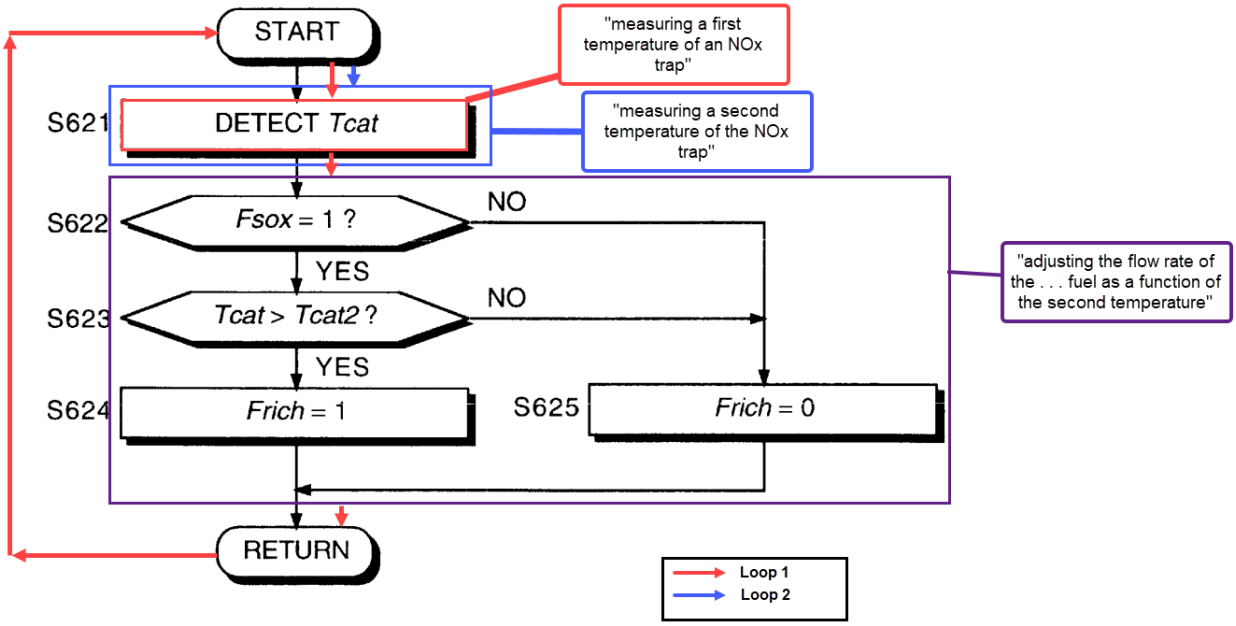

Id. at FIG. 6 (annotations added).

167. In my opinion, a POSITA would have been motivated to modify Kerns' fuel injection methods to operate in a continuous loop based on the teachings of Takahashi. Takahashi teaches that its continuous monitoring of the temperature of catalytic converter or NOx trap temperature and adjusting fuel injection based on the temperature enables efficient operation of the catalyst to discharge oxides without impairing the catalysts' durability. Ex. 1008 at 1:49-54.

168. In my opinion, a POSITA also would understand that the software in Kerns' conventional-microcomputer engine controller could be modified to continuously measure the NOx trap temperature and adjust fueling based on the temperature based on the teachings of Takahashi by repeating the methods already disclosed by Kerns. Moreover, as explained above, Kerns already teaches performing its methods in a continuous loop. Operating in a continuous loop would include "measuring a second temperature of the NOx trap while operating in the stratified mode."

169. Accordingly, in my opinion Kerns in view of Takahashi renders obvious claim limitation 1[c].

5. 1[d]: "adjusting the flow rate of the evaporated fuel vapors as a function of the second temperature when the second temperature is within a lower temperature threshold and an upper temperature threshold."

170. In my opinion, Kerns in view of Takahashi renders obvious adjusting the flow rate of the evaporated fuel vapors as a function of the second temperature

when the second temperature is within a lower temperature threshold and an upper temperature threshold.

171. Kerns also teaches that the flow rate of its fuel vapors, $\dot{m}_p$, is "controlled via purge valve 134," where the purge valve is controlled by "control signal PRG." Ex. 1006 at 4:26-29. As shown in the function below, Kerns' flow rate $\dot{m}_p$ is a function of control signal PRG:

$$\dot{m}_p = g(PRG)$$

Id. at 9:10-15.

172. Kerns' also teaches that its control signal PRG, which determines the flow rate of fuel vapors, is calculated based on the NOx trap temperature error e'. *Id.* at 11:8-11. NOx trap temperature error e' is itself calculated as the difference between Tdtrp (the desired NOx trap temperature) and Ttrp (actual NOx trap temperature). As taught by Kerns in Figure 7 (blocks 740 and 742 or 716 and 718), this error e' is only calculated when the second catalyst temperature is within a lower temperature threshold and an upper temperature threshold. Therefore, the flow rate of fuel vapor is a function of the NOx trap temperature.

173. As further shown in annotated Figure 7 below , temperature error e', control signal PRG, and evaporated fuel vapor flow rate $\dot{m}_p$ are each recalculated when Kerns' engine is operating in the stratified combustion mode and actual NOx

trap temperature Ttrp is between lower threshold value T1' and upper threshold value T2'. *Id.* at 11:1-38. Because Kerns' methods, like Takahashi, run in a continuous loop, on the second loop of the method taught in Figure 7 Kerns teaches measuring a second temperature of the NOx trap.

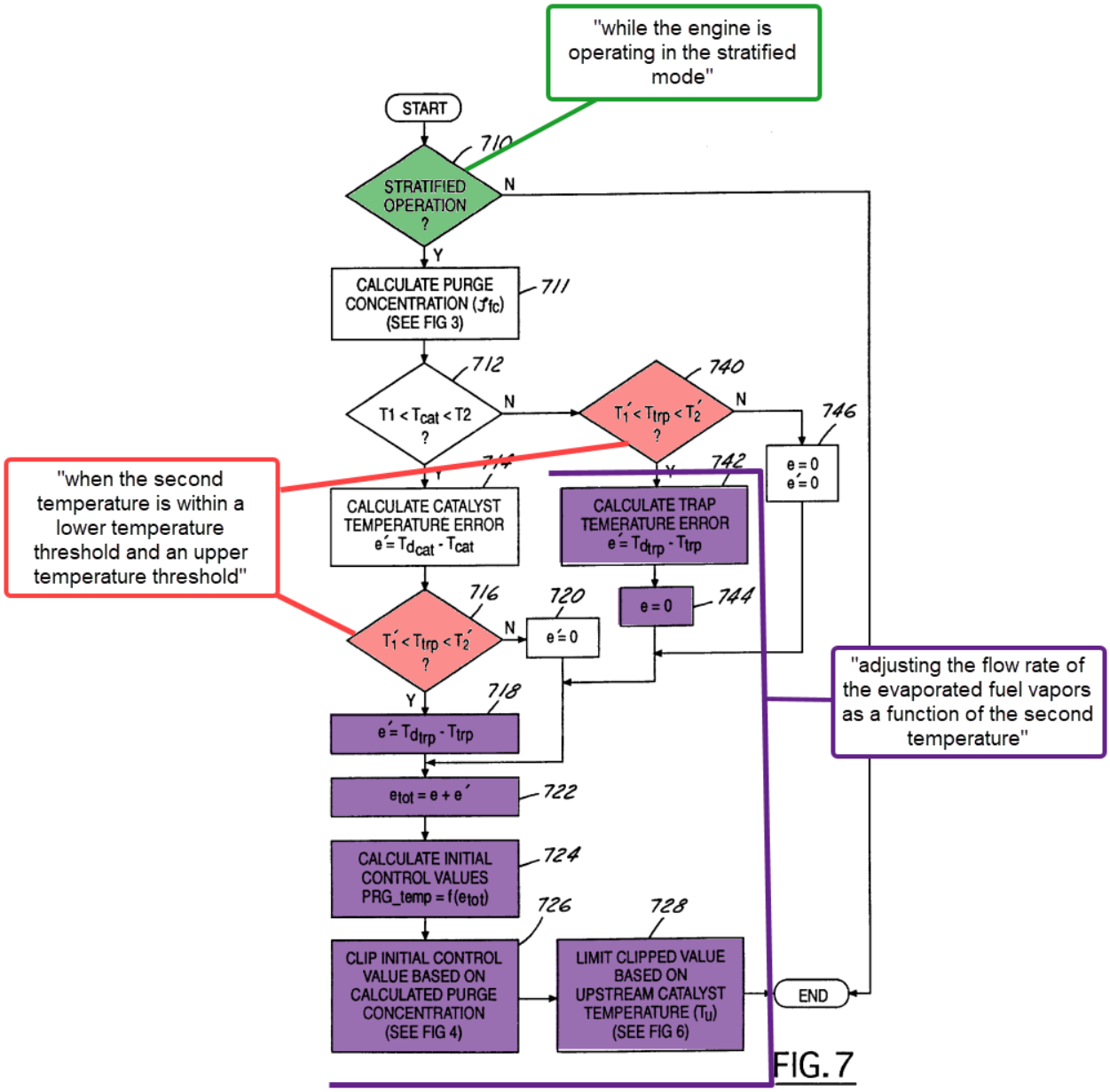

Id. at FIG. 7 (annotations added).

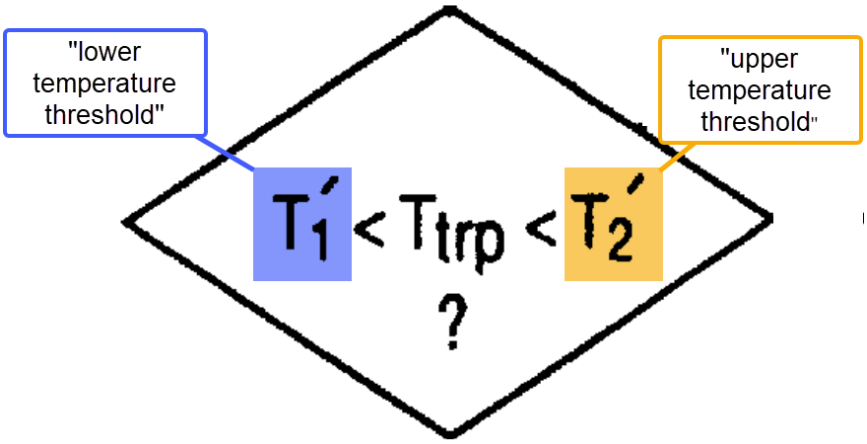

Id.

174. Accordingly, Kerns teaches adjusting the flow rate of the evaporated fuel vapors ($\dot{m}_p$) as a function of the second temperature (Ttrp) when the second temperature is within a lower temperature threshold (T_1') and an upper temperature threshold (T_2').

175. Likewise, Takahashi also teaches a method for controlling "catalyst temperature" for "an internal combustion engine." *Id.* Takahashi's method performs an "air-fuel ratio rich condition determining routine" "every 10 milliseconds." *Id.* at 10:30-32. One embodiment of Takahashi's control routine is shown in Takahashi's annotated Figure 6 below. Takahashi's routine measures catalyst temperature Tcat, determines whether Tcat exceeds the temperature threshold Tcat2. *Id.* at 10:30-57. If Tcat exceeds the threshold, the routine sets the flag Frich to 1 to indicate the air/fuel ratio will be enriched. *Id.*

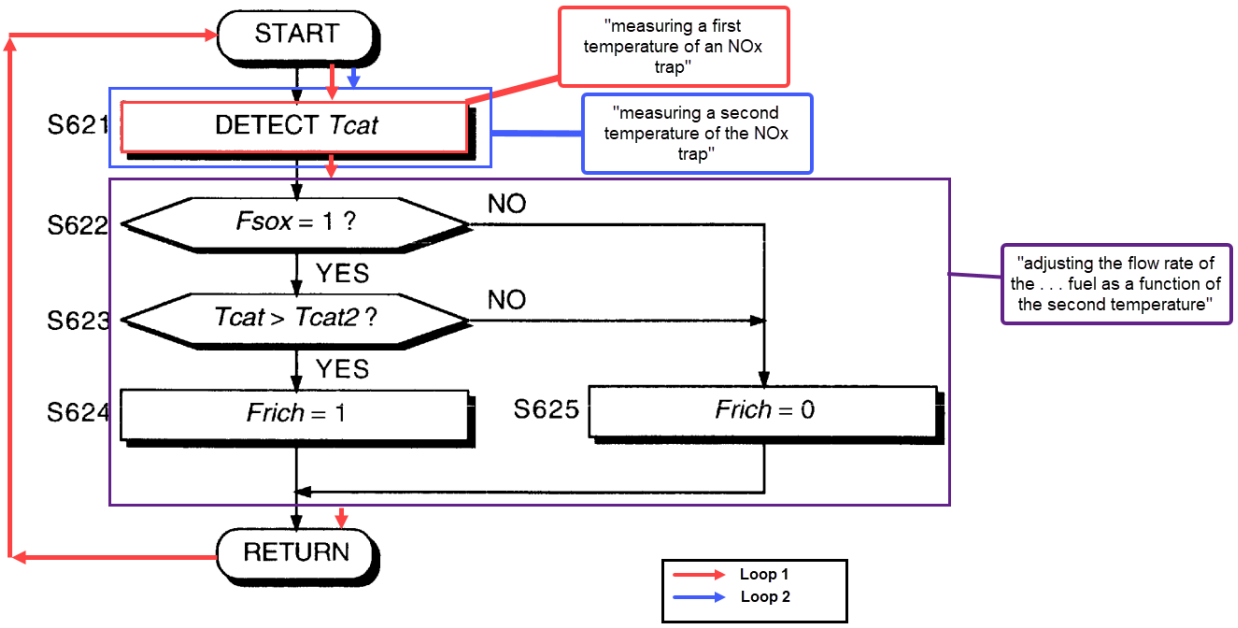

Id. at FIG. 6 (annotations added).

176. In my opinion, a POSITA would have been motivated to modify Kerns' fuel injection methods to operate in a continuous loop based on the teachings of Takahashi. Takahashi teaches that its continuous monitoring of the temperature of catalytic converter or NOx trap temperature and adjusting fuel injection based on the temperature enables efficient operation of the catalyst to discharge oxides without impairing the catalysts' durability. Ex. 1008 at 1:49-54.

177. In my opinion, a POSITA also would understand that the software in Kerns' conventional-microcomputer engine controller could be modified to continuously measure the NOx trap temperature and adjust fueling based on the temperature based on the teachings of Takahashi by repeating the methods already

disclosed by Kerns. Moreover, as explained above, Kerns already teaches performing its methods in a continuous loop.

178. Accordingly, in my opinion Kerns in view of Takahashi renders obvious claim limitation 1[d].

C. Claim 2: "The method of claim 1, further comprising: switching the engine to the homogeneous mode when the second temperature is below the lower temperature threshold."

179. In my opinion, Kerns in view of Takahashi discloses the method of claim 1, further comprising switching the engine to the homogeneous mode when the second temperature is below the lower threshold.

180. As explained above, Kerns in view of Takahashi discloses the method of claim 1.

181. Kerns also discloses that "when the stratified mode no longer provides a fuel savings" "the engine air/fuel operating mode is switched to the homogeneous mode." Ex. 1006 at 7:62-8:5. The stratified mode no longer provides fuel savings where the additional fuel vapor injection needed to maintain the temperature of the NOx trap temperature exceeds the fuel savings from operating in the stratified mode. *Id.* Kerns defines a temperature threshold "T1'" that "represents a lower level below which NOx trap 72 cannot support an exothermic reaction." *Id.* at 4:47-49; 11:3-8. Kerns method discloses switching the engine to homogeneous mode when "fuel vapor purge is burned in the cylinder and does not create an exothermic

reaction," which would occur when the temperature of the NOx trap is below the lower temperature threshold T1' representing the temperature required for exothermic reactions. *Id*. at 6:52-61.

182. Accordingly, in my opinion Kerns in view of Takahashi renders claim 2 obvious.

D. <u>Claim 3: "The method of claim 2, further comprising: measuring a fuel level of the evaporated fuel vapors after the switching the engine to the homogeneous mode."</u>

183. In my opinion, Kerns in view of Takahashi discloses the method of claim 2, further comprising measuring a fuel level of the evaporated fuel vapors after switching the engine to the homogeneous mode. As explained above, Kerns in view of Takahashi discloses the method of claim 2.

184. Kerns also teaches that "[a]s the engine switches to the homogeneous mode, the new fuel flow rate from the fuel injectors . . . is found as:

$$\dot{m}_{f_h} = \dot{m}_{f_{stoich}} - \rho_f \dot{m}_p$$

when fuel vapor purge is continued in the homogeneous mode." Ex. 1006 at 8:15-22.

185. As shown in the formula above, Kerns teaches calculating a new fuel flow rate $\dot{m}_{fh}$ based on an input ρ_f, which Kerns teaches is the "fuel vapor

concentration." *Id.* at 5:5-8, 8:15-22. Fuel vapor concentration ρ_f is itself calculated based on the formula below:

$$\rho_f = \frac{\dot{m}_p + \dot{m}_a - \lambda S \dot{m}_f}{\dot{m}_p(1 + \lambda S)}$$

Id. at 5:10-14.

186. Kerns teaches that λ in the above formula, which is used to calculate the fuel level of the evaporative fuel vapor when the engine switches to homogeneous mode, "is measured relative air/fuel ratio in the exhaust," correlates to the measured fuel level of the evaporated fuel vapors. *Id.* at 5:14-24. Collectively, Kerns discloses that after the engine switches to the homogeneous combustion mode, the system measures relative air/fuel ratio λ, which is used to determine the fuel level of the evaporative fuel vapors, and from that measured fuel level calculates the new fuel vapor flow rate.

187. Accordingly, in my opinion Kerns in view of Takahashi renders claim 3 obvious.

E. <u>Claim 4:</u> "The method of claim 3, wherein the measuring the fuel level comprises measuring the fuel level via an exhaust gas oxygen sensor."

188. In my opinion, Kerns in view of Takahashi discloses the method of claim 3, wherein the measuring the fuel level comprises measuring the fuel level via an exhaust gas oxygen sensor.

189. As explained above, Kerns in view of Takahashi discloses the method of claim 3.

190. Kerns also teaches an "[e]xhaust gas oxygen sensor 76" "coupled to exhaust manifold 48" that measures "a relative air fuel ratio λ." Ex. 1006 at 3:22-28. The "relative air fuel ratio λ" measured with the exhaust gas oxygen sensor can be used to determine the fuel level of the evaporative fuel vapors; in the exhaust gas; "measuring the fuel level comprises measuring the fuel level via an exhaust gas oxygen sensor." *Id.*

191. Accordingly, in my opinion Kerns in view of Takahashi renders claim 4 obvious.

F. Claim 5: "The method of claim 4, wherein the measuring the fuel level comprises measuring the fuel level with an universal exhaust gas oxygen sensor."

192. In my opinion, Kerns in view of Takahashi discloses the method of claim 4, wherein the measuring the fuel level comprises measuring the fuel level with a universal exhaust gas oxygen sensor

193. As explained above, Kerns in view of Takahashi discloses the method of claim 4.

194. Kerns also teaches that its exhaust gas oxygen sensor 76 provides "signal UEGO." Ex. 1006 at 3:22-28. "UEGO" stands for universal gas oxygen, and Kern's exhaust gas oxygen sensor therefore teaches a universal gas oxygen

sensor. Ex. 1001 at 3:31 (defining "UEGO" as "Universal Exhaust Gas Oxygen"). Kerns also teaches measuring a fuel level represented by relative air fuel ratio λ using the universal gas oxygen sensor. *Id.* at 3:22-28.

195. Accordingly, in my opinion Kerns in view of Takahashi renders claim 5 obvious.

XV. SECONDARY CONSIDERATIONS

196. I understand that "secondary considerations" may be legally relevant to an obviousness analysis. If MMT presents such evidence, I will consider it; however, I do not believe that any commercial success of the claimed invention or other objective evidence would be attributable to the merits of the claimed invention given my analysis of the lack of novelty and the obviousness of the '166 patent.

XVI. CONCLUSION

197. In signing this Declaration, I recognize that the Declaration will be filed as evidence in a contested case before the Patent Trial and Appeal Board of the United States Patent and Trademark Office. I also recognize that I may be subject to cross-examination in the case and that cross-examination will take place within the United States. If cross-examination is required of me, I will appear for cross-examination within the United States during the time allotted for cross-examination.

198. I hereby declare that all statements made herein of my own knowledge are true and that all statements made on the information and belief are believed to

be true; and further that these statements were made with the knowledge that willful false statements and the like so made are punishable by fine or imprisonment, or both, under Section 1001 of Title 18 of the United States Code.

June 20, 2023

Glenn R. Bower, Ph.D.