US006561166B2

(12) **United States Patent**
Halleron et al.

(10) **Patent No.: US 6,561,166 B2**
(45) **Date of Patent: May 13, 2003**

(54) **PURGE FUEL CANISTER MEASUREMENT METHOD AND SYSTEM**

(75) Inventors: **Ian Halleron**, Chelmsford (GB); **Jon Dixon**, Maldon (GB)

(73) Assignee: **Visteon Global Technologies, Inc.**, Dearborn, MI (US)

(*) Notice: Subject to any disclaimer, the term of this patent is extended or adjusted under 35 U.S.C. 154(b) by 0 days.

(21) Appl. No.: **09/861,983**

(22) Filed: **May 16, 2001**

(65) **Prior Publication Data**

US 2001/0052339 A1 Dec. 20, 2001

Related U.S. Application Data

(60) Provisional application No. 60/211,085, filed on Jun. 13, 2000.

(51) **Int. Cl.**[7] **F02M 33/04**

(52) **U.S. Cl.** **123/519**; 123/520; 123/676; 123/703; 123/443; 60/285

(58) **Field of Search** 123/519, 520, 123/295, 676, 703, 443, 698; 701/109, 103, 104; 60/285

(56) **References Cited**

U.S. PATENT DOCUMENTS

4,986,070 A * 1/1991 Abe 123/520
5,245,975 A * 9/1993 Ito 123/520
5,426,938 A 6/1995 Ogawa et al.
6,176,217 B1 * 1/2001 Ohkuma et al. 123/295
6,192,672 B1 * 2/2001 Kerns 123/520
6,209,526 B1 4/2001 Sun et al.

FOREIGN PATENT DOCUMENTS

EP	0488 254 A1		6/1992	
EP	1074706 A2		2/2001	
JP	6137223		5/1994	
JP	21606	*	1/2002	..... F02D/41/04
WO	WO 94/20738		9/1994	
WO	WO 99/14482		3/1999	
WO	WO 99/32766		7/1999	

* cited by examiner

Primary Examiner—Henry C. Yuen
Assistant Examiner—Hai H. Huynh
(74) *Attorney, Agent, or Firm*—Brinks Hofer Gilson & Lione

(57) **ABSTRACT**

An engine controller system for a direct injection spark ignited internal combustion engine that is capable of operating a stratified mode where fuel is injected during a compression stroke of the engine and a homogeneous mode where fuels is injected during an intake stroke of the engine. The engine controller monitors adjusts the flow rate of the evaporated fuel vapors as a function of the catalyst temperature and the fuel level in the evaporated fuel vapors. The engine controller determines the fuel level in the evaporated fuel vapors as a function of the exhaust gas oxygen senor output.

11 Claims, 2 Drawing Sheets

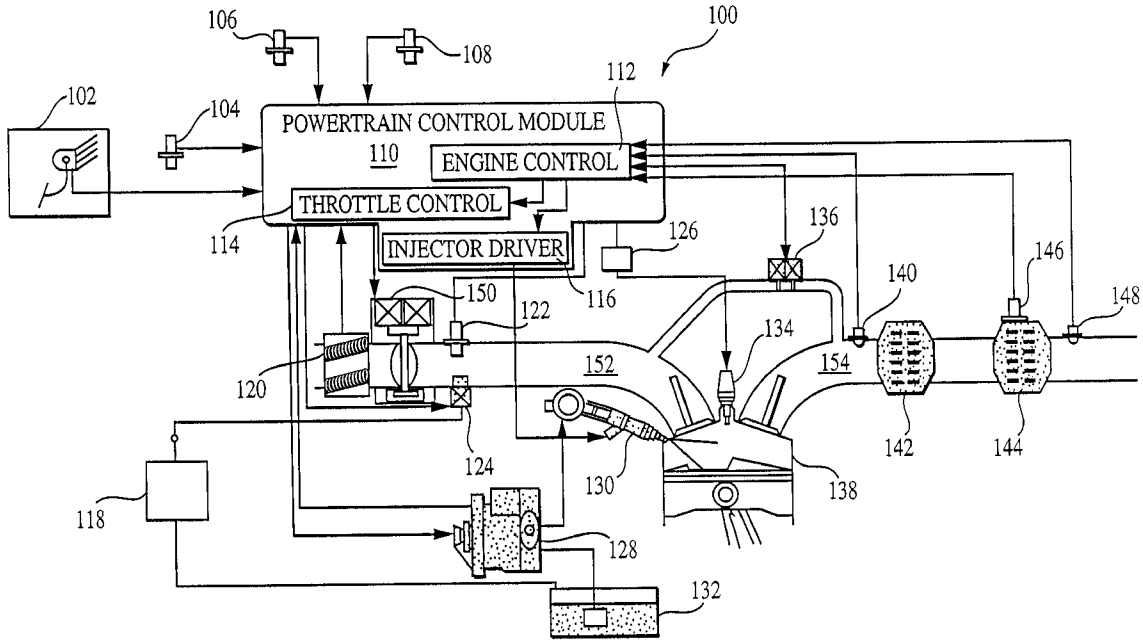

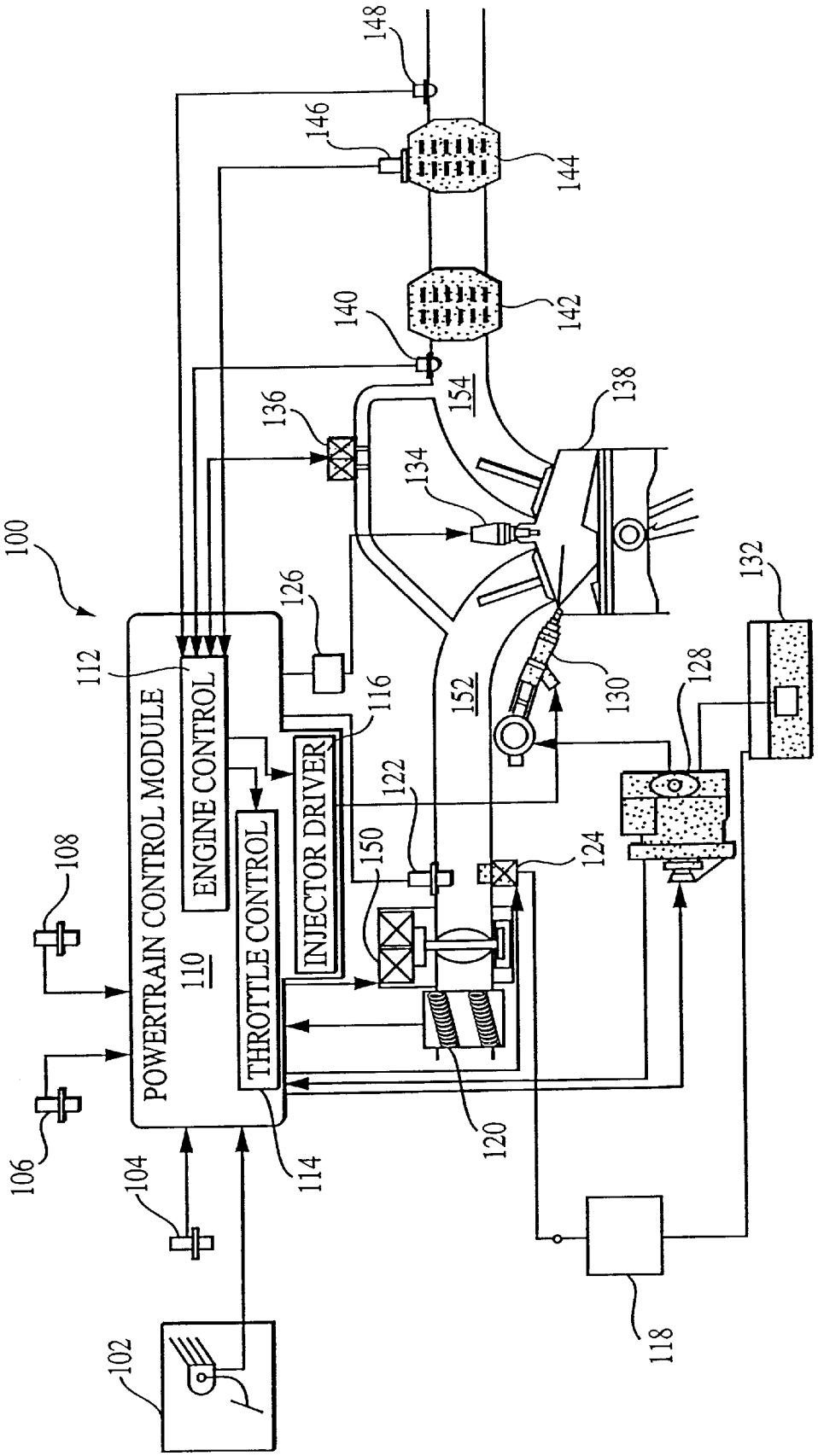
POWERTRAIN CONTROL MODULE
110
ENGINE CONTROL
THROTTLE CONTROL
INJECTOR DRIVER
100
102
104
106
108
112
114
116
118
120
122
124
126
128
130
132
134
136
138
140
142
144
146
148
150
152
154

Figure 1

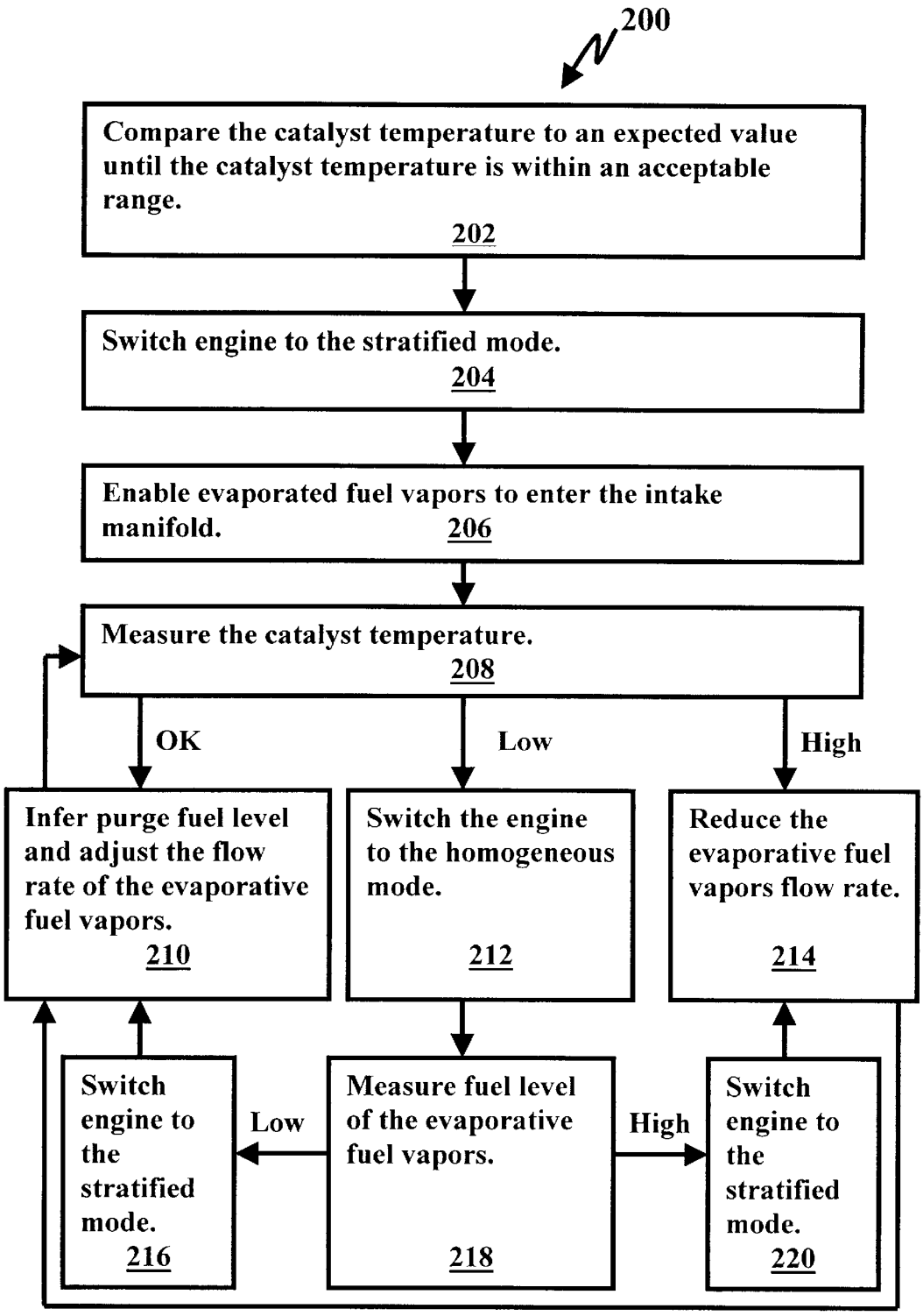
200
Compare the catalyst temperature to an expected value until the catalyst temperature is within an acceptable range.
202
Switch engine to the stratified mode.
204
Enable evaporated fuel vapors to enter the intake manifold.
206
Measure the catalyst temperature.
208
OK
Low
High
Infer purge fuel level and adjust the flow rate of the evaporative fuel vapors.
210
Switch the engine to the homogeneous mode.
212
Reduce the evaporative fuel vapors flow rate.
214
Switch engine to the stratified mode.
216
Low
Measure fuel level of the evaporative fuel vapors.
218
High
Switch engine to the stratified mode.
220

Figure 2

PURGE FUEL CANISTER MEASUREMENT METHOD AND SYSTEM

REFERENCE TO RELATED APPLICATION

This application claims the benefit of U.S. Provisional Application No. 60/211,085, filed Jun. 13, 2000, titled "Measurement of Canister Purge Fuel Content in a Stratified Direct Injection Gasoline Engine."

BACKGROUND

This invention relates generally to the field of gasoline-based internal combustion engines and more specifically to direct injection engines.

Direct injection engines, also called "in-cylinder injection engines," inject fuel directly into the cylinders. Diesel engines commonly use direct injection. Gasoline engines, also called spark ignition engines, normally are port fuel injection engines that inject fuel via a carburetor or a fuel injector into the intake manifold or over the intake values into the cylinders. Recently, direct injection spark ignited ("DISI") engines have been proposed. A DISI engine requires the fuel to be injected at relatively high pressure. Such a DISI engine also requires that the air-fuel ratio be leaner than convention gasoline engines and the air-fuel ratio must remain within tighter margins.

DISI engines operate in a stratified mode or a homogenous mode. When a DISI engine is in the stratified mode, the combustion chambers contain stratified layers with different air/fuel mixtures. The strata closest to the spark plug contains a stoichiometric mixture, that is a slightly richer mixture, and subsequent strata contain progressively leaner mixtures. When the engine is in the homogeneous mode, a homogeneous mixture of air and fuel is injected into the combustion chamber. Homogeneous operation may be either lean of stoichiometry, at stoichiometry, or rich of stoichiometry.

When a DISI engine operates in the stratified mode, the fuel is injected late in the compression cycle, usually during a compression stroke. Because of the late injection, a very short time is available for mixing of the air and fuel in the cylinder. Stable combustion is obtained because the rich zone air/fuel mixture near the spark plug is within the combustion limits while the overall air/fuel mixture in the cylinder is leaner than the air/fuel mixture normally used when the engine is in the homogeneous mode. When the engine is in the homogeneous mode, fuel is injected during an intake stroke of the engine. More mixing time is available in the homogenous mode. The stratified mode is more fuel efficient than the homogenous mode.

Direct injection engines are commonly coupled to three-way catalytic converters to reduce CO, HC, and NOx emissions. When operating at air/fuel mixtures lean of stoichiometry, an NOx trap or an NOx catalyst is typically coupled downstream of the three-way catalytic converter to further reduce NOx emissions. The stratified mode may be used for light to medium loads and the homogeneous mode may be used for medium to heavy loads.

Gasoline engines typically collect evaporated fuel vapors from the gasoline tank in a carbon canister, also called a charcoal canister or an evaporative canister. The evaporated fuel vapors are purged from the carbon canister into the intake manifold and burned in the combustion chambers, that is in the cylinders, along with the fuel that is injected via the fuel injectors. Since the air-fuel ratio of the evaporated fuel vapors is not known, the net air-fuel ratio in the cylinder or in a strata in the cylinder is not known. Thus, it is desirable to measure the air-fuel ratio of the evaporated fuel vapors and control the air-fuel ratio injected into the combustion chambers accordingly. Traditionally, the fuel level of the evaporated fuel vapors is measured with an exhaust gas oxygen sensor, such as a switching HEGO sensor or a linear UEGO sensor. When the engine is running lean, the exhaust gas oxygen sensor may not be able to accurately detect the fuel level of the evaporated fuel vapors.

As gasoline engines become more efficient, that is they are run leaner, the exhaust gas sensors become less accurate or stop working. For example, a DISI engine operating in the stratified mode uses a much leaner mixture than when it is operating in the homogenous mode. The evaporated fuel vapors, which need to be burned, contain a homogenous mixture of air and fuel. However, the fuel level in the evaporated fuel vapors varies over time. Thus, traditional engines often shut off the flow of evaporated fuel vapors when the engine is running lean, for example in the stratified mode. Shut off of the flow of the evaporated fuel vapors limits the efficiency of the engine by limiting the time the traditional engine can be operated in the stratified mode.

Further, when a traditional DISI engine running in the stratified mode purges evaporated fuel vapors into the combustion chamber, the strata outside the rich stratified zone may be too lean to support combustion. This may result in large quantities of unburned fuel in the exhaust gas, which may result in an undesirable large exothermic reaction in the catalyst as the catalyst oxidizes the unburned fuel. If the evaporated fuel vapors contain too much fuel, making the mixture too rich, the torque produced by the engine undesirably increases.

SUMMARY

An engine controller for a direct injection spark ignited internal combustion engine can operate in a stratified mode where fuel is injected during a compression stroke of the engine and a homogeneous mode where fuels is injected during an intake stroke of the engine. The engine controller adjusts the flow rate of evaporated fuel vapors as a function of the catalyst temperature and the fuel level in the evaporated fuel vapors. The engine controller determines the fuel level in the evaporated fuel vapors as a function of the exhaust gas oxygen senor output.

The improved system and method of controlling a direct injection spark ignition engine is described. The improved system and method may use sensors that are found on existing DISI engines to indirectly measure the fuel level in the evaporated fuel vapors. The improved system and method allows the evaporated fuel vapors to be purged into the intake manifold when the engine is run lean. Thus, the engine operates longer in the more efficient stratified mode resulting in a lower fuel consumption.

The foregoing discussion has been provided only by way of introduction. Nothing in this section should be taken as a limitation on the following claims, which define the scope of the invention.

BRIEF DESCRIPTION OF THE DRAWINGS

The components in the figures are not necessarily to scale, emphasis instead being placed upon illustrating the principles of the invention. Moreover, in the figures, like reference numerals designate corresponding parts throughout the different views.

FIG. 1 illustrates a direct injection engine with an improved evaporated fuel vapors control system; and

FIG. **2** illustrates a flow diagram of a method of controlling the direct injection engine of FIG. **1**.

DETAILED DESCRIPTION

A. Definitions

AFR—Air to Fuel Ratio. The air to fuel ratio may be the mass of Air divided by the mass of fuel.

CFD—Computational Fluid Dynamics

CTS—Catalyst Temperature Sensor

DI—Direct Injection

DISI—Direct Injection Spark Ignition

EFC—Electronic Flow Control

EG—Exhaust Gas

EGR—Exhaust Gas Re-circulation

EGO—Exhaust Gas Oxygen

EMVA—Electro-Mechanical Valve Actuation

ETC—Electronic Temperature Control

HEGO—Heated Exhaust Gas Oxygen

MAP—Manifold Absolute Pressure

OHC—Overhead Cam

PCV—Positive Crankcase Ventilation

PFI—Port Fuel Injection

SI—Spark Ignited

SIDI—Spark Ignition Direct-injection

SOHC—Single Overhead Cam

Stoichiometric combustion—An ideal combustion in which the fuel is completely burned. In a stoichiometric combustion, all the Carbon is converted to CO_2, all hydrogen is converted to H_2O, and all the sulfur is converted to SO_2.

TWC—Three-Way Catalyst or Three-Way Catalytic converter

UEGO—Universal Exhaust Gas Oxygen

B. Introduction

The improved system and method of controlling a direct injection spark ignition engine is described. The improved system and method may use sensors that are found on existing DISI engines to indirectly measure the fuel level in the evaporated fuel vapors. The improved system and method allows the evaporated fuel vapors to be purged into the intake manifold when the engine is run lean. Thus, the engine operates longer in the more efficient stratified mode resulting in a lower fuel consumption.

The following description of the preferred embodiments of the invention is not intended to limit the scope of the invention to these preferred embodiments, but rather to enable any person skilled in the art to make and use the invention.

C. Direct Injection System

FIG. **1** illustrates an embodiment of a direct injection spark ignition ("DISI") engine **100**. The DISI engine **100** may include such components as an accelerator pedal and sensor assembly **102**, a crank angle sensor **104**, a CAM position sensor **106**, an engine coolant sensor **108** or cylinder head temperature sensor **108**, a powertrain control module **110**, an engine control module **112**, a throttle control module **114**, an injector driver module **116**, a carbon canister **118**, a temperature/mass air flow meter **120**, a MAP sensor **122**, a vapor management valve **124**, an ignition control **126**, a fuel pump **128**, a fuel injector **130**, a fuel tank **132**, a spark plug **134**, an exhaust gas re-circulation ("EGR") valve **136**, a high compression engine **138**, a universal exhaust gas oxygen ("UEGO") sensor **140**, a three-way catalytic converter ("TWC") **142**, a NOx trap/catalyst **144**, a catalyst temperature sensor ("CTS") **146**, a heated exhaust gas oxygen ("HEGO") sensor **148**, a throttle **150**, an intake manifold **152**, and an exhaust manifold **154**.

The evaporative fuel vapor system captures evaporative fuel vapors from the gasoline tank **132**, stores the evaporative fuel vapor in the canister **118**, and releases the vapors into the intake manifold **152** via the vapor management valve **124**. The vapor management valve **124** may be controlled by the engine controller **112**. The evaporative fuel vapors tend to be a homogeneous mixture of fuel vapors and air. The fuel level in the evaporative fuel vapors varies over time. The vapor management valve **124** may release the evaporative fuel vapors into the intake manifold **152**. Then the evaporative fuel vapors enter the combustion chamber via an intake valve. The fuel injector **130** injects fuel directly into the combustion chamber. The injected fuel and the evaporative fuel vapors mix before combustion. The exhaust gases resulting from the combustion are exhausted via an exhaust valve into the exhaust manifold **154**. The CTS **146** is located near the lean NOx trap/catalyst **144** and measures the temperature of the lean NOx trap/catalyst **144** during the cleansing of the wash coat of SOx to control poisoning.

The engine **100** is controlled by various engine controllers including the power train control module **110**. The power train control module **110** may in include such controllers as an engine control **112**, a throttle control **114**, and an injector driver **116**. For example, the power train control module **110** may include a canister purge valve controller for a direct injection spark ignited internal combustion engine that includes a temperature sensor interface that receives a temperature of a catalyst in the engine's exhaust system, an engine mode controller that switches the engine between a stratified mode and a homogeneous mode, and a canister purge valve interface that controls a flow rate of evaporated fuel vapors into the engine's intake manifold via a canister purge valve. The canister purge valve controller may control the flow rate of evaporated fuel vapors as a function of the temperature received by the temperature sensor interface and the engine's mode.

The components of the DISl engine **100** may include various variations of the devices described above. The fuel pump **128** may include a high pressure fuel pump, an electronically controlled pressure regulator, and a pressure sensor assembly. The fuel injector **130** may include a high pressure fuel rail assembly. The fuel tank **132** may include a feed pump. The EGR valve **136** may include an electric EGR valve. The engine **138** may include multiple cylinders, each with a direct injection fuel injector. The TWC **142** may include a quick light-off TWC. The NOx trap/catalyst **144** may include a lean NOx trap, a lean NOx catalyst, or other device to reduce NOx in the exhaust gas. The throttle **150** may include an electronic controlled throttle. Other variations in the components of the DISI engine **100** will also be apparent and within the scope of the invention.

FIG. **2** illustrates a flow diagram of a method of controlling the DISI engine **100** of FIG. **1**.

In block **202**, the CTS **146** (FIG. **1**) is tested to determine if it is operating within calibration limits without evaporated fuel vapors being introduced into the combustion chamber. The engine **100** (FIG. **1**) may be in the homogeneous mode or the stratified mode during the calibration. The calibration includes comparing the catalyst temperature as measured by the CTS to an expected range. If the engine **100** is outside the calibration range, the engine **100** may be operated in the stratified mode with the evaporative fuel vapors turned off and in the homogeneous mode with the evaporative fuel vapors on or off. The activities in block **204** to **220** are not executed when the engine **100** is operating outside the calibration range.

In block **204**, if the engine **100** is in the homogeneous mode, the engine **100** is switched to the stratified mode. The engine control **112** (FIG. **1**) may control the mode of operation of the engine **100**.

In block **206**, the evaporated fuel vapors from the carbon canister **118** (FIG. **1**) are allowed to enter the intake manifold **152** (FIG. **1**). The flow rate of the evaporated fuel vapors may be controlled by the vapor management valve **124** (FIG. **1**) and the engine control **112**.

In block **208**, the temperature of the catalyst is measured when the evaporated fuel vapors are being introduced into the combustion chamber. The temperature of the catalyst may be measured by the CTS **146**. The catalyst temperature should rise after the evaporated fuel vapors are introduced due to the oxidation of the unburned fuel in the exhaust gas. The catalyst temperature change can be determined as the temperature difference between the temperature measured in block **208** and the temperature measured in block **202** or as the temperature difference between the temperature measured in block **208** and an expected temperature based on a temperature model.

In block **210**, if the catalyst temperature change from block **208** is within an acceptable range, the engine can remain in the stratified mode with the evaporated fuel vapors being introduced, and the fuel level of the evaporated fuel vapors can be determined as a function of the temperature change measured in block **208**. The acceptable range may have different upper and lower thresholds depending on various factors.

In block **214**, if the catalyst temperature change from block **208** is above the acceptable range, the evaporated fuel vapors contain too much fuel. The flow rate of the evaporated fuel vapors may be adjusted, normally reduced, to allow some of the evaporated fuel vapors to be purged while maintaining the engine **100** in the stratified mode. The flow rate can be repeatedly reduced in block **214** until the catalyst temperature is within an acceptable range. Alternatively, the engine **100** could be switched to the homogeneous mode with the evaporated fuel vapors being purged at the same rate until the fuel level in the evaporated fuel vapors is reduced to an acceptable level for operation in the stratified mode.

In block **212**, if the catalyst temperature change from block **208** is below the acceptable range, the fuel level in the evaporated fuel vapors is either low or very high. If the fuel level in the evaporated fuel vapors is very high, the entire stratified charge becomes combustible. To determine whether the fuel level in the evaporated fuel vapors is low or very high, the engine **100** is switched to the homogeneous mode, then block **218** is executed.

In block **218**, after the engine **100** is switched to the homogeneous mode in block **212**, the fuel level of the evaporated fuel vapors can be accurately measured via an EGO sensor, for example an UEGO. Then either block **216** or **218** is executed based on whether the EGO sensor indicates a high or low level of fuel in the evaporative fuel vapors.

In block **216**, if the fuel level of the evaporated fuel vapors measured in block **218** is below a fuel level threshold, the engine is switched back to the stratified mode. Then, the purge fuel level is determined as a function of the catalyst temperature in block **210**.

In block **220**, if the fuel level of the evaporated fuel vapors measured in block **218** is above the fuel level threshold, the engine is switched back to the stratified mode. Then, the flow rate of the evaporated fuel vapors is reduced in block **214**. Alternatively, the engine **100** could be operated in the homogeneous mode with the evaporated fuel vapors being purged at the same rate until the fuel level in the evaporated fuel vapors is reduced to an acceptable level for operation in the stratified mode.

The process or portions of the process described in blocks **202** to **220** may be repeated a number of times. Further, the process described in blocks **202** to **220** may be a component of a larger process that cycles the engine between the stratified mode and the homogeneous mode based on other factors, such as engine load, acceleration, and other factors.

As a person skilled in the art will recognize from the previous description and from the figures and claims, modifications and changes can be made to the preferred embodiments of the invention without departing from the scope of the invention defined in the following claims.

What is claimed is:

1. A method of controlling a direct injection spark ignited internal combustion engine that is capable of operating in a stratified mode where fuel is injected during a compression stroke of the engine and a homogeneous mode where fuels is injected during an intake stroke of the engine, the internal combustion engine having a catalytic converter and an NO_x trap, comprising:

measuring a first temperature of an NO_x trap that is in contact with an exhaust gas exhausted from a combustion chamber while the engine is operating in the stratified mode;

enabling evaporated fuel vapors to enter the combustion chamber at a flow rate while the engine is operating in the stratified mode;

measuring a second temperature of the NO_x trap while the engine is operating in the stratified mode; and

adjusting the flow rate of the evaporated fuel vapors as a function of the second temperature when the second temperature is within a lower temperature threshold and an upper temperature threshold.

2. The method of claim **1**, further comprising:

switching the engine to the homogeneous mode when the second temperature is below the lower temperature threshold.

3. The method of claim **2**, further comprising:

measuring a fuel level of the evaporated fuel vapors after the switching the engine to the homogeneous mode.

4. The method of claim **3**, wherein the measuring the fuel level comprises measuring the fuel level via an exhaust gas oxygen sensor.

5. The method of claim **4**, wherein the measuring the fuel level comprises measuring the fuel level with an universal exhaust gas oxygen sensor.

6. The method of claim **5**, further comprising:

switching the engine to the stratified mode when the measured fuel level in the evaporated fuel vapors is above a fuel level threshold.

7. The method of claim **6**, further comprising lowering the flow rate after switching the engine to the stratified mode.

8. The method of claim **5**, further comprising:

switching the engine to the stratified mode when the measured fuel level in the evaporated fuel vapors is below the fuel level threshold; and

adjusting the flow rate as a function of the second temperature.

9. The method of claim **8**, further comprising:

lowering the lower temperature threshold after switching to the stratified mode.

10. The method of claim **9**, repeating the method of controlling a direct injection spark ignited internal combustion engine with the lowered lower temperature threshold.

11. The method of claim **1**, further comprising:

reducing the flow rate of the evaporated fuel vapors into the combustion chamber as a function of the difference between the first and second temperatures when the NO_x trap temperature exceeds the upper temperature threshold.

* * * * *