US008204252B1

(12) **United States Patent**
Avendano

(10) **Patent No.: US 8,204,252 B1**
(45) **Date of Patent: Jun. 19, 2012**

(54) **SYSTEM AND METHOD FOR PROVIDING CLOSE MICROPHONE ADAPTIVE ARRAY PROCESSING**

(75) Inventor: **Carlos Avendano**, Mountain View, CA (US)

(73) Assignee: **Audience, Inc.**, Mountain View, CA (US)

(*) Notice: Subject to any disclaimer, the term of this patent is extended or adjusted under 35 U.S.C. 154(b) by 1066 days.

(21) Appl. No.: **12/080,115**

(22) Filed: **Mar. 31, 2008**

Related U.S. Application Data

(63) Continuation-in-part of application No. 11/699,732, filed on Jan. 29, 2007.

(60) Provisional application No. 60/850,928, filed on Oct. 10, 2006.

(51) **Int. Cl.**
H04B 15/00 (2006.01)
G10L 21/02 (2006.01)

(52) **U.S. Cl.** **381/94.7**; 381/94.1; 381/94.2; 381/94.3; 381/92; 704/226; 704/227; 704/223; 704/275

(58) **Field of Classification Search** 381/91, 381/92, 94.1–94.3, 94.7, 95, 110, 122, 312, 381/313; 704/226, 227, 233, 275
See application file for complete search history.

(56) **References Cited**

U.S. PATENT DOCUMENTS

3,976,863	A	8/1976	Engel
3,978,287	A	8/1976	Fletcher et al.
4,137,510	A	1/1979	Iwahara
4,433,604	A	2/1984	Ott
4,516,259	A	5/1985	Yato et al.
4,535,473	A	8/1985	Sakata
4,536,844	A	8/1985	Lyon
4,581,758	A	4/1986	Coker et al.
4,628,529	A	12/1986	Borth et al.
4,630,304	A	12/1986	Borth et al.
4,649,505	A	3/1987	Zinser, Jr. et al.
4,658,426	A	4/1987	Chabries et al.
4,674,125	A	6/1987	Carlson et al.
4,718,104	A	1/1988	Anderson

(Continued)

FOREIGN PATENT DOCUMENTS

JP	62110349	5/1987

(Continued)

OTHER PUBLICATIONS

Allen, Jont B. "Short Term Spectral Analysis, Synthesis, and Modification by Discrete Fourier Transform", IEEE Transactions on Acoustics, Speech, and Signal Processing. vol. ASSP-25, No. 3, Jun. 1977. pp. 235-238.

(Continued)

Primary Examiner — Vivian Chin
Assistant Examiner — Paul Kim
(74) *Attorney, Agent, or Firm* — Carr & Ferrell LLP

(57) **ABSTRACT**

Systems and methods for adaptive processing of a close microphone array in a noise suppression system are provided. A primary acoustic signal and a secondary acoustic signal are received. In exemplary embodiments, a frequency analysis is performed on the acoustic signals to obtain frequency sub-band signals. An adaptive equalization coefficient may then be applied to a sub-band signal of the secondary acoustic signal. A forward-facing cardioid pattern and a backward-facing cardioid pattern are then generated based on the sub-band signals. Utilizing cardioid signals of the forward-facing cardioid pattern and backward-facing cardioid pattern, noise suppression may be performed. A resulting noise suppressed signal is output.

21 Claims, 8 Drawing Sheets

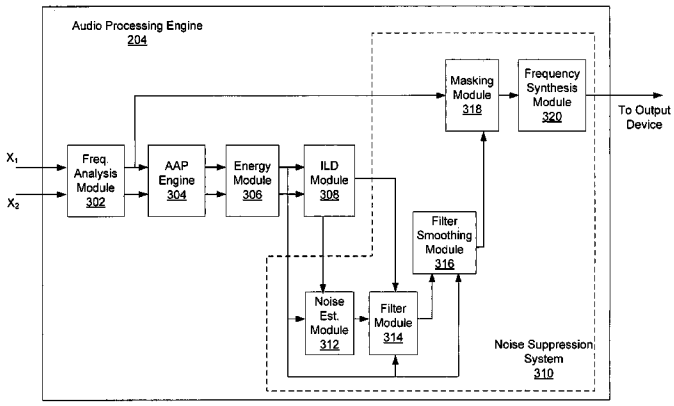

Sony v. Jawbone
U.S. Patent No. 8,321,213
Sony Ex. 1006

U.S. PATENT DOCUMENTS

4,811,404	A	3/1989	Vilmur et al.
4,812,996	A	3/1989	Stubbs
4,864,620	A	9/1989	Bialick
4,920,508	A	4/1990	Yassaie et al.
5,027,410	A	6/1991	Williamson et al.
5,054,085	A	10/1991	Meisel et al.
5,058,419	A	10/1991	Nordstrom et al.
5,099,738	A	3/1992	Hotz
5,119,711	A	6/1992	Bell et al.
5,142,961	A	9/1992	Paroutaud
5,150,413	A	9/1992	Nakatani et al.
5,175,769	A	12/1992	Hejna, Jr. et al.
5,187,776	A	2/1993	Yanker
5,208,864	A	5/1993	Kaneda
5,210,366	A	5/1993	Sykes, Jr.
5,224,170	A	6/1993	Waite, Jr.
5,230,022	A	7/1993	Sakata
5,319,736	A	6/1994	Hunt
5,323,459	A	6/1994	Hirano
5,341,432	A	8/1994	Suzuki et al.
5,381,473	A	1/1995	Andrea et al.
5,381,512	A	1/1995	Holton et al.
5,400,409	A	3/1995	Linhard
5,402,493	A	3/1995	Goldstein
5,402,496	A	3/1995	Soli et al.
5,471,195	A	11/1995	Rickman
5,473,702	A	12/1995	Yoshida et al.
5,473,759	A	12/1995	Slaney et al.
5,479,564	A	12/1995	Vogten et al.
5,502,663	A	3/1996	Lyon
5,536,844	A	7/1996	Wijesekera
5,544,250	A	8/1996	Urbanski
5,574,824	A	11/1996	Slyh et al.
5,583,784	A	12/1996	Kapust et al.
5,587,998	A	12/1996	Velardo, Jr. et al.
5,590,241	A	12/1996	Park et al.
5,602,962	A	2/1997	Kellermann
5,675,778	A	10/1997	Jones
5,682,463	A	10/1997	Allen et al.
5,694,474	A	12/1997	Ngo et al.
5,706,395	A	1/1998	Arslan et al.
5,717,829	A	2/1998	Takagi
5,729,612	A	3/1998	Abel et al.
5,732,189	A	3/1998	Johnston et al.
5,749,064	A	5/1998	Pawate et al.
5,757,937	A	5/1998	Itoh et al.
5,792,971	A	8/1998	Timis et al.
5,796,819	A	8/1998	Romesburg
5,806,025	A	9/1998	Vis et al.
5,809,463	A	9/1998	Gupta et al.
5,825,320	A	10/1998	Miyamori et al.
5,839,101	A	11/1998	Vahatalo et al.
5,920,840	A	7/1999	Satyamurti et al.
5,933,495	A	8/1999	Oh
5,943,429	A	8/1999	Handel
5,956,674	A	9/1999	Smyth et al.
5,974,380	A	10/1999	Smyth et al.
5,978,824	A	11/1999	Ikeda
5,983,139	A	11/1999	Zierhofer
5,990,405	A	11/1999	Auten et al.
6,002,776	A	12/1999	Bhadkamkar et al.
6,061,456	A	5/2000	Andrea et al.
6,072,881	A	6/2000	Linder
6,097,820	A	8/2000	Turner
6,108,626	A	8/2000	Cellario et al.
6,122,610	A	9/2000	Isabelle
6,134,524	A	10/2000	Peters et al.
6,137,349	A	10/2000	Menkhoff et al.
6,140,809	A	10/2000	Doi
6,173,255	B1	1/2001	Wilson et al.
6,180,273	B1	1/2001	Okamoto
6,216,103	B1	4/2001	Wu et al.
6,222,927	B1	4/2001	Feng et al.
6,223,090	B1	4/2001	Brungart
6,226,616	B1	5/2001	You et al.
6,263,307	B1	7/2001	Arslan et al.
6,266,633	B1	7/2001	Higgins et al.
6,317,501	B1	11/2001	Matsuo
6,339,758	B1	1/2002	Kanazawa et al.
6,355,869	B1	3/2002	Mitton
6,363,345	B1	3/2002	Marash et al.
6,381,570	B2	4/2002	Li et al.
6,430,295	B1	8/2002	Handel et al.
6,434,417	B1	8/2002	Lovett
6,449,586	B1	9/2002	Hoshuyama
6,469,732	B1	10/2002	Chang et al.
6,487,257	B1	11/2002	Gustafsson et al.
6,496,795	B1	12/2002	Malvar
6,513,004	B1	1/2003	Rigazio et al.
6,516,066	B2	2/2003	Hayashi
6,529,606	B1	3/2003	Jackson, Jr., II et al.
6,549,630	B1	4/2003	Bobisuthi
6,584,203	B2	6/2003	Elko et al.
6,622,030	B1	9/2003	Romesburg et al.
6,717,991	B1	4/2004	Nordholm et al.
6,718,309	B1	4/2004	Selly
6,738,482	B1	5/2004	Jaber
6,760,450	B2	7/2004	Matsuo
6,785,381	B2	8/2004	Gartner et al.
6,792,118	B2	9/2004	Watts
6,795,558	B2	9/2004	Matsuo
6,798,886	B1	9/2004	Smith et al.
6,810,273	B1	10/2004	Mattila et al.
6,882,736	B2	4/2005	Dickel et al.
6,915,264	B2	7/2005	Baumgarte
6,917,688	B2	7/2005	Yu et al.
6,944,510	B1	9/2005	Ballesty et al.
6,978,159	B2	12/2005	Feng et al.
6,982,377	B2	1/2006	Sakurai et al.
6,999,582	B1	2/2006	Popovic et al.
7,016,507	B1	3/2006	Brennan
7,020,605	B2	3/2006	Gao
7,031,478	B2	4/2006	Belt et al.
7,054,452	B2	5/2006	Ukita
7,065,485	B1	6/2006	Chong-White et al.
7,076,315	B1	7/2006	Watts
7,092,529	B2	8/2006	Yu et al.
7,092,882	B2	8/2006	Arrowood et al.
7,099,821	B2	8/2006	Visser et al.
7,142,677	B2	11/2006	Gonopolskiy et al.
7,146,316	B2	12/2006	Alves
7,155,019	B2	12/2006	Hou
7,164,620	B2	1/2007	Hoshuyama
7,171,008	B2	1/2007	Elko
7,171,246	B2	1/2007	Mattila et al.
7,174,022	B1	2/2007	Zhang et al.
7,206,418	B2	4/2007	Yang et al.
7,209,567	B1	4/2007	Kozel et al.
7,225,001	B1	5/2007	Eriksson et al.
7,242,762	B2	7/2007	He et al.
7,246,058	B2	7/2007	Burnett
7,254,242	B2	8/2007	Ise et al.
7,359,520	B2	4/2008	Brennan et al.
7,412,379	B2	8/2008	Taori et al.
7,433,907	B2	10/2008	Nagai et al.
7,555,434	B2	6/2009	Nomura et al.
7,949,522	B2	5/2011	Hetherington et al.
2001/0016020	A1	8/2001	Gustafsson et al.
2001/0031053	A1	10/2001	Feng et al.
2002/0002455	A1	1/2002	Accardi et al.
2002/0009203	A1	1/2002	Erten
2002/0041693	A1	4/2002	Matsuo
2002/0080980	A1	6/2002	Matsuo
2002/0106092	A1	8/2002	Matsuo
2002/0116187	A1	8/2002	Erten
2002/0133334	A1	9/2002	Coorman et al.
2002/0147595	A1	10/2002	Baumgarte
2002/0184013	A1	12/2002	Walker
2003/0014248	A1	1/2003	Vetter
2003/0026437	A1	2/2003	Janse et al.
2003/0033140	A1	2/2003	Taori et al.
2003/0039369	A1	2/2003	Bullen
2003/0040908	A1	2/2003	Yang et al.
2003/0061032	A1	3/2003	Gonopolskiy
2003/0063759	A1	4/2003	Brennan et al.
2003/0072382	A1	4/2003	Raleigh et al.
2003/0072460	A1	4/2003	Gonopolskiy et al.

2003/0095667	A1	5/2003	Watts	
2003/0099345	A1	5/2003	Gartner et al.	
2003/0101048	A1	5/2003	Liu	
2003/0103632	A1	6/2003	Goubran et al.	
2003/0128851	A1	7/2003	Furuta	
2003/0138116	A1	7/2003	Jones et al.	
2003/0147538	A1*	8/2003	Elko	381/92
2003/0169891	A1	9/2003	Ryan et al.	
2003/0228023	A1	12/2003	Burnett et al.	
2004/0013276	A1	1/2004	Ellis et al.	
2004/0047464	A1	3/2004	Yu et al.	
2004/0057574	A1	3/2004	Faller	
2004/0078199	A1	4/2004	Kremer et al.	
2004/0131178	A1	7/2004	Shahaf et al.	
2004/0133421	A1	7/2004	Burnett et al.	
2004/0165736	A1	8/2004	Hetherington et al.	
2004/0196989	A1	10/2004	Friedman et al.	
2004/0263636	A1	12/2004	Cutler et al.	
2005/0025263	A1	2/2005	Wu	
2005/0027520	A1	2/2005	Mattila et al.	
2005/0049864	A1	3/2005	Kaltenmeier et al.	
2005/0060142	A1	3/2005	Visser et al.	
2005/0152559	A1	7/2005	Gierl et al.	
2005/0185813	A1	8/2005	Sinclair et al.	
2005/0213778	A1	9/2005	Buck et al.	
2005/0216259	A1	9/2005	Watts	
2005/0228518	A1	10/2005	Watts	
2005/0276423	A1	12/2005	Aubauer et al.	
2005/0288923	A1	12/2005	Kok	
2006/0072768	A1	4/2006	Schwartz et al.	
2006/0074646	A1	4/2006	Alves et al.	
2006/0098809	A1	5/2006	Nongpiur et al.	
2006/0120537	A1	6/2006	Burnett et al.	
2006/0133621	A1	6/2006	Chen et al.	
2006/0149535	A1	7/2006	Choi et al.	
2006/0184363	A1	8/2006	McCree et al.	
2006/0198542	A1	9/2006	Benjelloun Touimi et al.	
2006/0222184	A1	10/2006	Buck et al.	
2007/0021958	A1	1/2007	Visser et al.	
2007/0027685	A1	2/2007	Arakawa et al.	
2007/0033020	A1	2/2007	(Kelleher) Francois et al.	
2007/0067166	A1	3/2007	Pan et al.	
2007/0078649	A1	4/2007	Hetherington et al.	
2007/0094031	A1	4/2007	Chen	
2007/0100612	A1	5/2007	Ekstrand et al.	
2007/0116300	A1	5/2007	Chen	
2007/0150268	A1	6/2007	Acero et al.	
2007/0154031	A1	7/2007	Avendano et al.	
2007/0165879	A1	7/2007	Deng et al.	
2007/0195968	A1	8/2007	Jaber	
2007/0230712	A1	10/2007	Belt et al.	
2007/0276656	A1	11/2007	Solbach et al.	
2008/0019548	A1	1/2008	Avendano	
2008/0033723	A1	2/2008	Jang et al.	
2008/0140391	A1	6/2008	Yen et al.	
2008/0201138	A1	8/2008	Visser et al.	
2008/0228478	A1	9/2008	Hetherington et al.	
2008/0260175	A1	10/2008	Elko	
2009/0012783	A1	1/2009	Klein	
2009/0012786	A1	1/2009	Zhang et al.	
2009/0129610	A1	5/2009	Kim et al.	
2009/0220107	A1	9/2009	Every et al.	
2009/0238373	A1	9/2009	Klein	
2009/0253418	A1	10/2009	Makinen	
2009/0271187	A1	10/2009	Yen et al.	
2009/0323982	A1	12/2009	Solbach et al.	
2010/0094643	A1	4/2010	Avendano et al.	
2010/0278352	A1	11/2010	Petit et al.	
2011/0178800	A1	7/2011	Watts	

FOREIGN PATENT DOCUMENTS

JP	4184400	7/1992
JP	5053587	3/1993
JP	05-172865	7/1993
JP	6269083	9/1994
JP	10-313497	11/1998
JP	11-249693	9/1999
JP	2004053895	2/2004
JP	2004531767	10/2004
JP	2004533155	10/2004
JP	2005110127	4/2005
JP	2005148274	6/2005
JP	2005518118	6/2005
JP	2005195955	7/2005
WO	01/74118	10/2001
WO	02080362	10/2002
WO	02103676	12/2002
WO	03/043374	5/2003
WO	03/069499	8/2003
WO	03069499	8/2003
WO	2004/010415	1/2004
WO	2007/081916	7/2007
WO	2007/140003	12/2007
WO	2010/005493	1/2010

OTHER PUBLICATIONS

Allen, Jont B. et al. "A Unified Approach to Short-Time Fourier Analysis and Synthesis", Proceedings of the IEEE. vol. 65, No. 11, Nov. 1977. pp. 1558-1564.

Avendano, Carlos, "Frequency-Domain Source Identification and Manipulation in Stereo Mixes for Enhancement, Suppression and Re-Panning Applications," 2003 IEEE Workshop on Application of Signal Processing to Audio and Acoustics, Oct. 19-22, pp. 55-58, New Paltz, New York, USA.

Boll, Steven F. "Suppression of Acoustic Noise in Speech using Spectral Subtraction", IEEE Transactions on Acoustics, Speech and Signal Processing, vol. ASSP-27, No. 2, Apr. 1979, pp. 113-120.

Boll, Steven F. et al. "Suppression of Acoustic Noise in Speech Using Two Microphone Adaptive Noise Cacellation", IEEE Transactions on Acoustic, Speech, and Signal Processing, vol. ASSP-28, No. 6, Dec. 1980, pp. 752-753.

Boll, Steven F. "Suppression of Acoustic Noise in Speech Using Spectral Subtraction", Dept. of Computer Science, University of Utah Salt Lake City, Utah, Apr. 1979, pp. 18-19.

Chen, Jingdong et al. "New Insights into the Noise Reduction Wiener Filter", IEEE Transactions on Audio, Speech, and Language Processing. vol. 14, No. 4, Jul. 2006, pp. 1218-1234.

Cohen, Israel, et al. "Microphone Array Post-Filtering for Non-Stationary Noise Suppression", IEEE International Conference on Acoustics, Speech, and Signal Processing, May 2002, pp. 1-4.

Cohen, Israel, "Multichannel Post-Filtering in Nonstationary Noise Environments", IEEE Transactions on Signal Processing, vol. 52, No. 5, May 2004, pp. 1149-1160.

Dahl, Mattias et al., "Simultaneous Echo Cancellation and Car Noise Suppression Employing a Microphone Array", 1997 IEEE International Conference on Acoustics, Speech, and Signal Processing, Apr. 21-24, pp. 239-242.

Elko, Gary W., "Chapter 2: Differential Microphone Arrays", "Audio Signal Processing for Next-Generation Multimedia Communication Systems", 2004, pp. 12-65, Kluwer Academic Publishers, Norwell, Massachusetts, USA.

"ENT 172." Instructional Module. Prince George's Community College Department of Engineering Technology. Accessed: Oct. 15, 2011. Subsection: "Polar and Rectangular Notation". <http://academic.ppgcc.edu/ent/ent172_instr_mod.html>.

Fuchs, Martin et al. "Noise Suppression for Automotive Applications Based on Directional Information", 2004 IEEE International Conference on Acoustics, Speech, and Signal Processing, May 17-21, pp. 237-240.

Fulghum, D. P. et al., "LPC Voice Digitizer with Background Noise Suppression", 1979 IEEE International Conference on Acoustics, Speech, and Signal Processing, pp. 220-223.

Goubran, R.A.. "Acoustic Noise Suppression Using Regression Adaptive Filtering", 1990 IEEE 40th Vehicular Technology Conference, May 6-9, pp. 48-53.

Graupe et al., "Blind Adaptive Filtering of Speech from Noise of Unknown Spectrum Using a Virtual Feedback Configuration", IEEE Transactions on Speech and Audio Processing, Mar. 2000, vol. 8, No. 2, pp. 146-158.

Haykin, Simon et al. "Appendix A.2 Complex Numbers." Signals and Systems. 2nd Ed. 2003. p. 764.

Hermansky, Hynek "Should Recognizers Have Ears?", In Proc. ESCA Tutorial and Research Workshop on Robust Speech Recognition for Unknown Communication Channels, pp. 1-10, France 1997.
Hohmann, V. "Frequency Analysis and Synthesis Using a Gammatone Filterbank", ACTA Acustica United with Acustica, 2002, vol. 88, pp. 433-442.
Jeffress Lloyd A, "A Place Theory of Sound Localization," Journal of Comparative and Physiological Psychology, 1948, vol. 41, p. 35-39.
Jeong, Hyuk et al., "Implementation of a New Algorithm Using the STFT with Variable Frequency Resolution for the Time-Frequency Auditory Model", J. Audio Eng. Soc., Apr. 1999, vol. 47, No. 4., pp. 240-251.
Kates, James M. "A Time-Domain Digital Cochlear Model", IEEE Transactions on Signal Proccessing, Dec. 1991, vol. 39, No. 12, pp. 2573-2592.
Lazzaro John et al., "A Silicon Model of Auditory Localization," Neural Computation Spring 1989, vol. 1, pp. 47-57, Massachusetts Institute of Technology.
Lippmann, Richard P. "Speech Recognition by Machines and Humans", Speech Communication, Jul. 1997, vol. 22, No. 1, pp. 1-15.
Liu, Chen et al. "A Two-Microphone Dual Delay-Line Approach for Extraction of a Speech Sound in the Presence of Multiple Interferers", Journal of the Acoustical Society of America, vol. 110, No. 6, Dec. 2001, pp. 3218-3231.
Martin, Rainer et al. "Combined Acoustic Echo Cancellation, Dereverberation and Noise Reduction: A two Microphone Approach", Annales des Telecommunications/Annals of Telecommunications. vol. 49, No. 7-8, Jul.-Aug 1994, pp. 429-438.
Martin, Rainer "Spectral Subtraction Based on Minimum Statistics", in Proceedings Europe. Signal Processing Conf., 1994, pp. 1182-1185.
Mitra, Sanjit K. Digital Signal Processing: a Computer-based Approach. 2nd Ed. 2001. pp. 131-133.
Mizumachi, Mitsunori et al. "Noise Reduction by Paired-Microphones Using Spectral Subtraction", 1998 IEEE International Conference on Acoustics, Speech and Signal Processing, May 12-15. pp. 1001-1004.
Moonen, Marc et al. "Multi-Microphone Signal Enhancement Techniques for Noise Suppression and Dereverbration," http://www.esat.kuleuven.ac.be/sista/yearreport97//node37.html, accessed on Apr. 21, 1998.
Watts, Lloyd Narrative of Prior Disclosure of Audio Display on Feb. 15, 2000 and May 31, 2000.
Cosi, Piero et al. (1996), "Lyon's Auditory Model Inversion: a Tool for Sound Separation and Speech Enhancement," Proceedings of ESCA Workshop on 'The Auditory Basis of Speech Perception,' Keele University, Keele (UK), Jul. 15-19, 1996, pp. 194-197.
Parra, Lucas et al. "Convolutive Blind Separation of Non-Stationary Sources", IEEE Transactions on Speech and Audio Processing. vol. 8, 3, May 2008, pp. 320-327.
Rabiner, Lawrence R. et al. "Digital Processing of Speech Signals", (Prentice-Hall Series in Signal Processing). Upper Saddle River, NJ: Prentice Hall, 1978.
Weiss, Ron et al., "Estimating Single-Channel Source Separation Masks: Revelance Vector Machine Classifiers vs. Pitch-Based Masking", Workshop on Statistical and Perceptual Audio Processing, 2006.
Schimmel, Steven et al., "Coherent Envelope Detection for Modulation Filtering of Speech," 2005 IEEE International Conference on Acoustics, Speech, and Signal Processing, vol. 1, No. 7, pp. 221-224.
Slaney, Malcom, "Lyon's Cochlear Model", Advanced Technology Group, Apple Technical Report #13, Apple Computer, Inc., 1988, pp. 1-79.
Slaney, Malcom, et al. "Auditory Model Inversion for Sound Separation," 1994 IEEE International Conference on Acoustics, Speech and Signal Processing, Apr. 19-22, vol. 2, pp. 77-80.
Slaney, Malcom. "An Introduction to Auditory Model Inversion", Interval Technical Report IRC 1994-014, http://coweb.ecn.purdue.edu/~maclom/interval/1994-014/, Sep. 1994, accessed on Jul. 6, 2010.
Solbach, Ludger "An Architecture for Robust Partial Tracking and Onset Localization in Single Channel Audio Signal Mixes", Technical University Hamburg-Harburg, 1998.
Stahl, V. et al., "Quantile Based Noise Estimation for Spectral Subtraction and Wiener Filtering," 2000 IEEE International Conference on Acoustics, Speech, and Signal Processing, Jun. 5-9, vol. 3, pp. 1875-1878.
Syntrillium Software Corporation, "Cool Edit User's Manual", 1996, pp. 1-74.
Tashev, Ivan et al. "Microphone Array for Headset with Spatial Noise Suppressor", http://research.microsoft.com/users/ivantash/Documents/Tashev_MAforHeadset_HSCMA_05.pdf. (4 pages).
Tchorz, Jurgen et al., "SNR Estimation Based on Amplitude Modulation Analysis with Applications to Noise Suppression", IEEE Transactions on Speech and Audio Processing, vol. 11, No. 3, May 2003, pp. 184-192.
Valin, Jean-Marc et al. "Enhanced Robot Audition Based on Microphone Array Source Separation with Post-Filter", Proceedings of 2004 IEEE/RSJ International Conference on Intelligent Robots and Systems, Sep. 28-Oct. 2, 2004, Sendai, Japan. pp. 2123-2128.
Watts, Lloyd, "Robust Hearing Systems for Intelligent Machines," Applied Neurosystems Corporation, 2001, pp. 1-5.
Widrow, B. et al., "Adaptive Antenna Systems," Proceedings IEEE, vol. 55, No. 12, pp. 2143-2159, Dec. 1967.
Yoo, Heejong et al., "Continuous-Time Audio Noise Suppression and Real-Time Implementation", 2002 IEEE International Conference on Acoustics, Speech, and Signal Processing, May 13-17, pp. IV3980-IV3983.
International Search Report dated Jun. 8, 2001 in Application No. PCT/US01/08372.
International Search Report dated Apr. 3, 2003 in Application No. PCT/US02/36946.
International Search Report dated May 29, 2003 in Application No. PCT/US03/04124.
International Search Report and Written Opinion dated Oct. 19, 2007 in Application No. PCT/US07/00463.
International Search Report and Written Opinion dated Apr. 9, 2008 in Application No. PCT/US07/21654.
International Search Report and Written Opinion dated Sep. 16, 2008 in Application No. PCT/US07/12628.
International Search Report and Written Opinion dated Oct. 1, 2008 in Application No. PCT/US08/08249.
International Search Report and Written Opinion dated May 11, 2009 in Application No. PCT/US09/01667.
International Search Report and Written Opinion dated Aug. 27, 2009 in Application No. PCT/US09/03813.
International Search Report and Written Opinion dated May 20, 2010 in Application No. PCT/US09/06754.
Fast Cochlea Transform, US Trademark Reg. No. 2,875,755 (Aug. 17, 2004).
Dahl, Mattias et al., "Acoustic Echo and Noise Cancelling Using Microphone Arrays", International Symposium on Signal Processing and its Applications, ISSPA, Gold coast, Australia, Aug. 25-30, 1996, pp. 379-382.
Demol, M. et al. "Efficient Non-Uniform Time-Scaling of Speech With WSOLA for CALL Applications", Proceedings of InSTIL/ICALL2004—NLP and Speech Technologies in Advanced Language Learning Systems—Venice Jun. 17-19, 2004.
Laroche, "Time and Pitch Scale Modification of Audio Signals", in "Applications of Digital Signal Processing to Audio and Acoustics", The Kluwer International Series in Engineering and Computer Science, vol. 437, pp. 279-309, 2002.
Moulines, Eric et al., "Non-Parametric Techniques for Pitch-Scale and Time-Scale Modification of Speech", Speech Communication, vol. 16, pp. 175-205, 1995.
Verhelst, Werner, "Overlap-Add Methods for Time-Scaling of Speech", Speech Communication vol. 30, pp. 207-221, 2000.

* cited by examiner

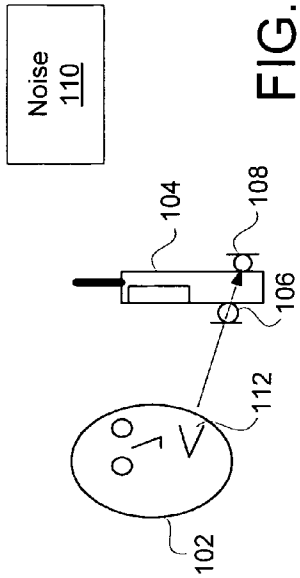
Noise
110
104
108
106
112
102

FIG. 1a

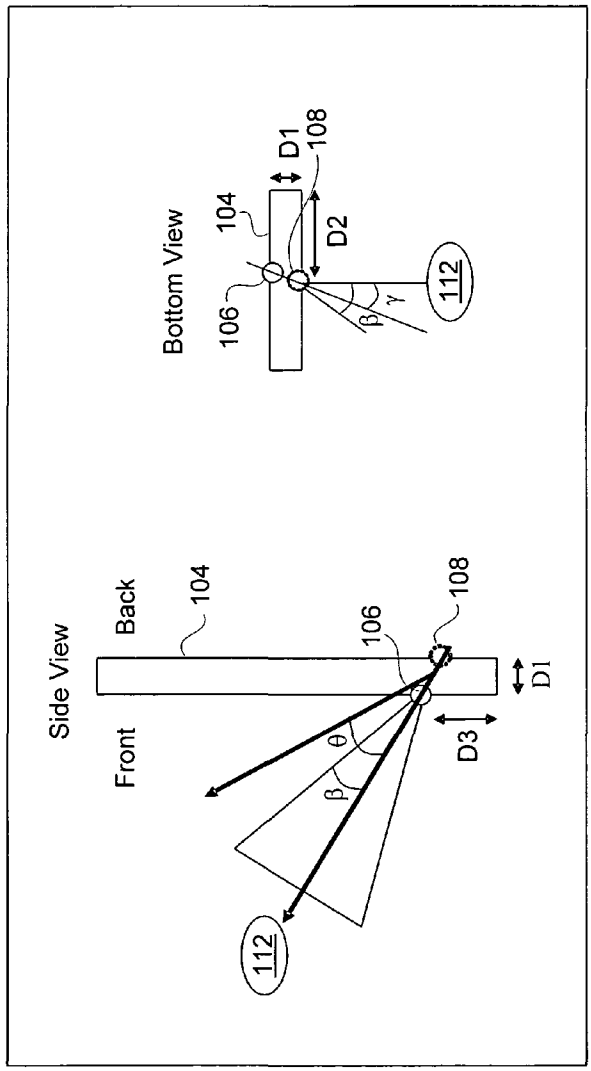
Side View
Front
Back
104
106
108
D1
D3
θ
β
112
Bottom View
106
104
108
D1
D2
β
γ
112

FIG. 1b

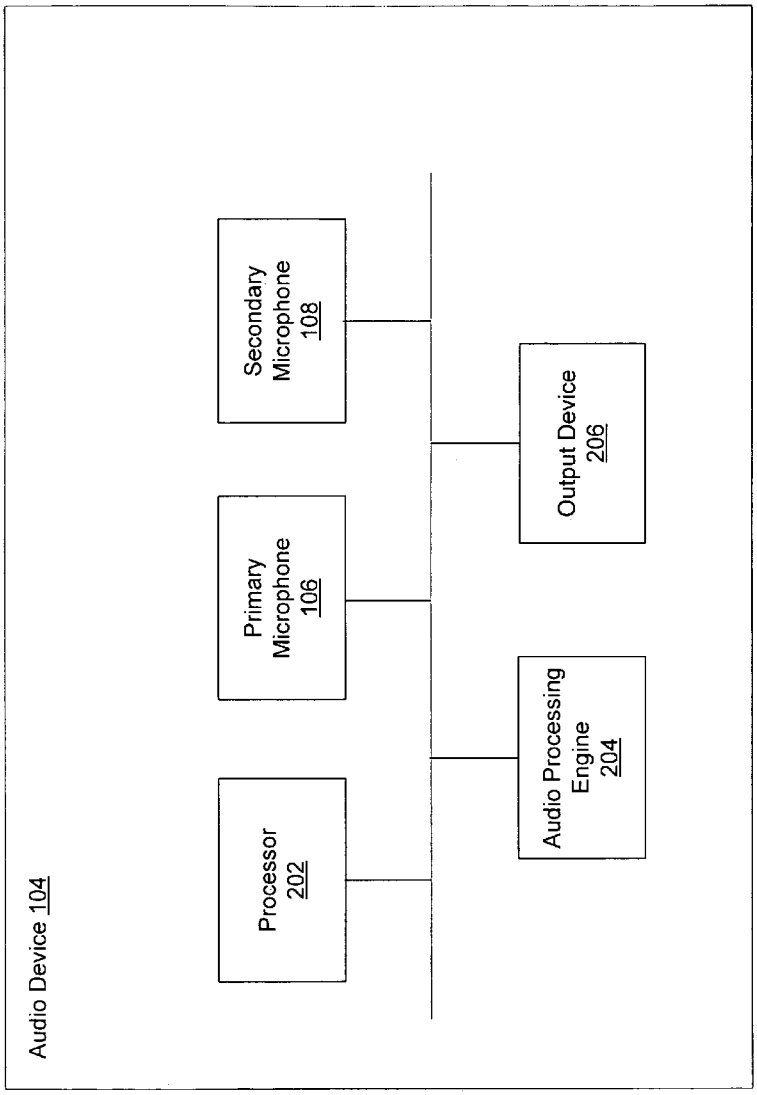
Audio Device 104
Processor 202
Primary Microphone 106
Secondary Microphone 108
Audio Processing Engine 204
Output Device 206

FIG. 2

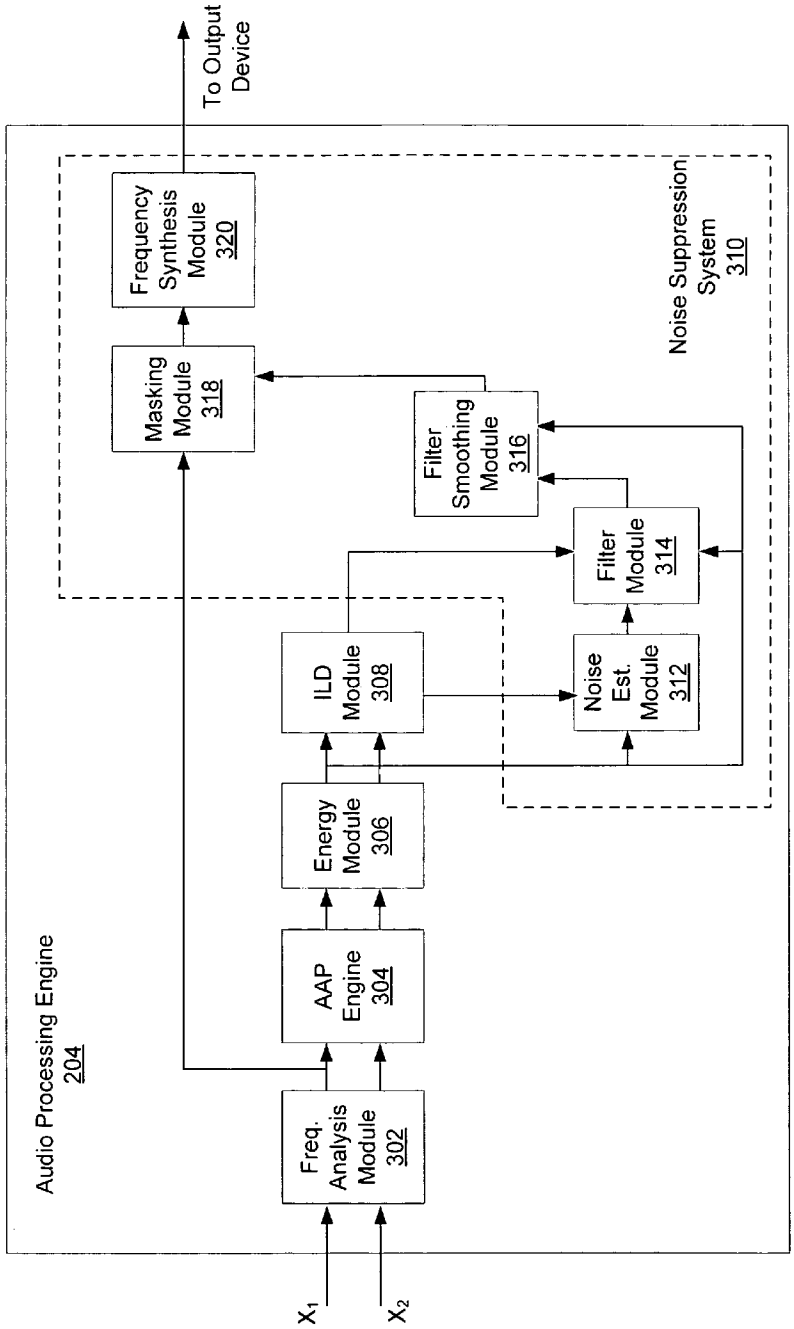
Audio Processing Engine
204
Freq. Analysis Module 302
AAP Engine 304
Energy Module 306
ILD Module 308
Noise Est. Module 312
Filter Module 314
Filter Smoothing Module 316
Masking Module 318
Frequency Synthesis Module 320
Noise Suppression System 310
To Output Device
X_1
X_2

FIG. 3

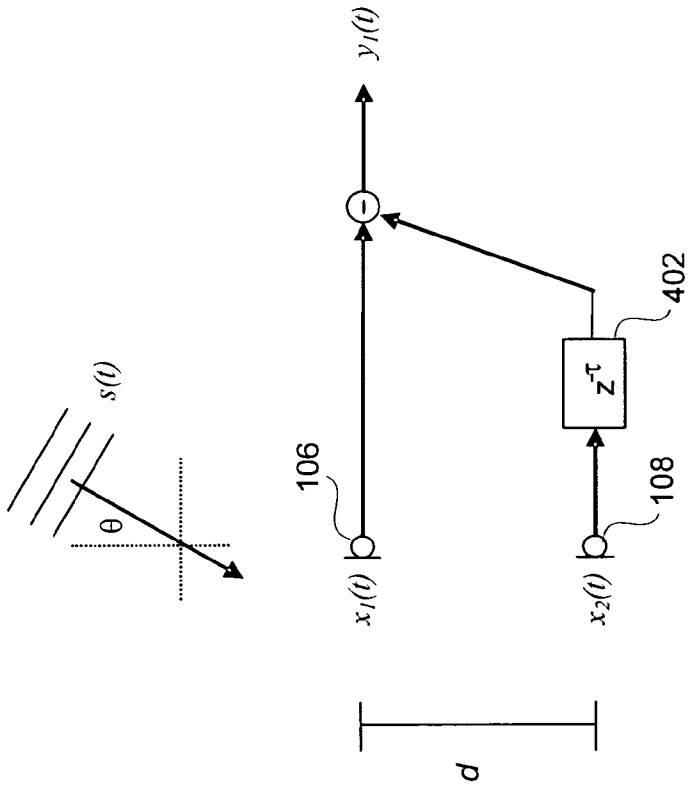

FIG. 4a

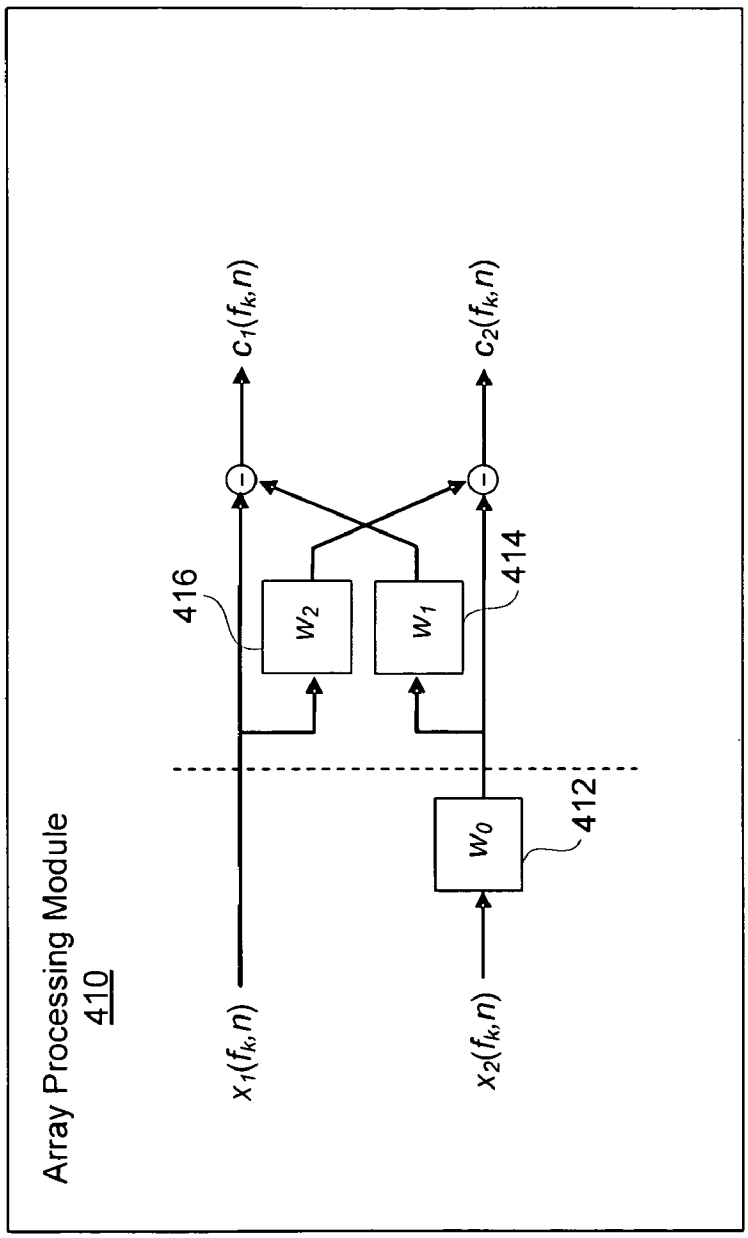
Array Processing Module
410
$x_1(f_k,n)$
$x_2(f_k,n)$
w_0
412
w_2
w_1
416
414
$c_1(f_k,n)$
$c_2(f_k,n)$

FIG. 4b

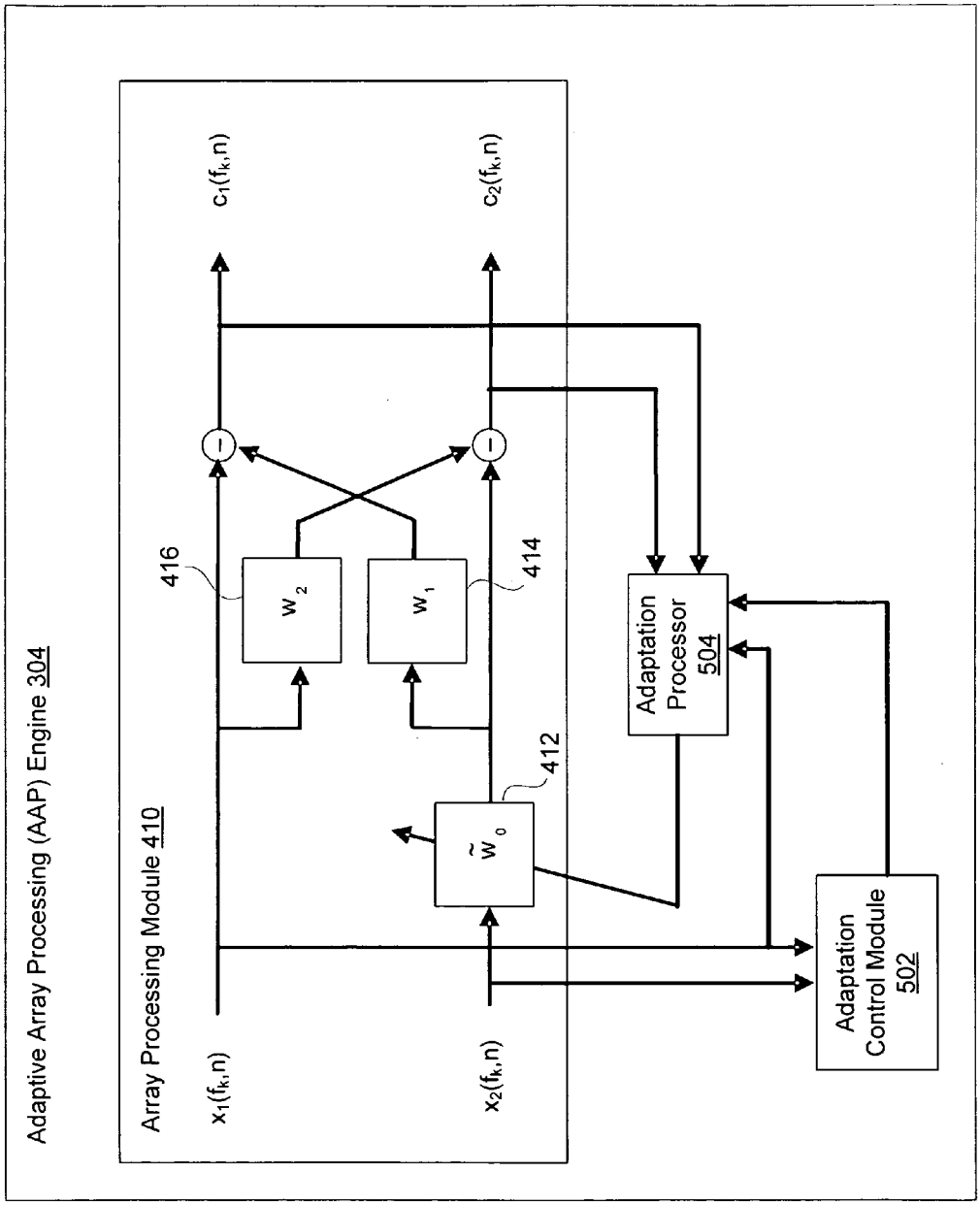
Adaptive Array Processing (AAP) Engine 304
Array Processing Module 410
$x_1(f_k,n)$
$x_2(f_k,n)$
$c_1(f_k,n)$
$c_2(f_k,n)$
416
414
412
w_2
w_1
$\tilde{w}_0$
Adaptation Processor 504
Adaptation Control Module 502

FIG. 5

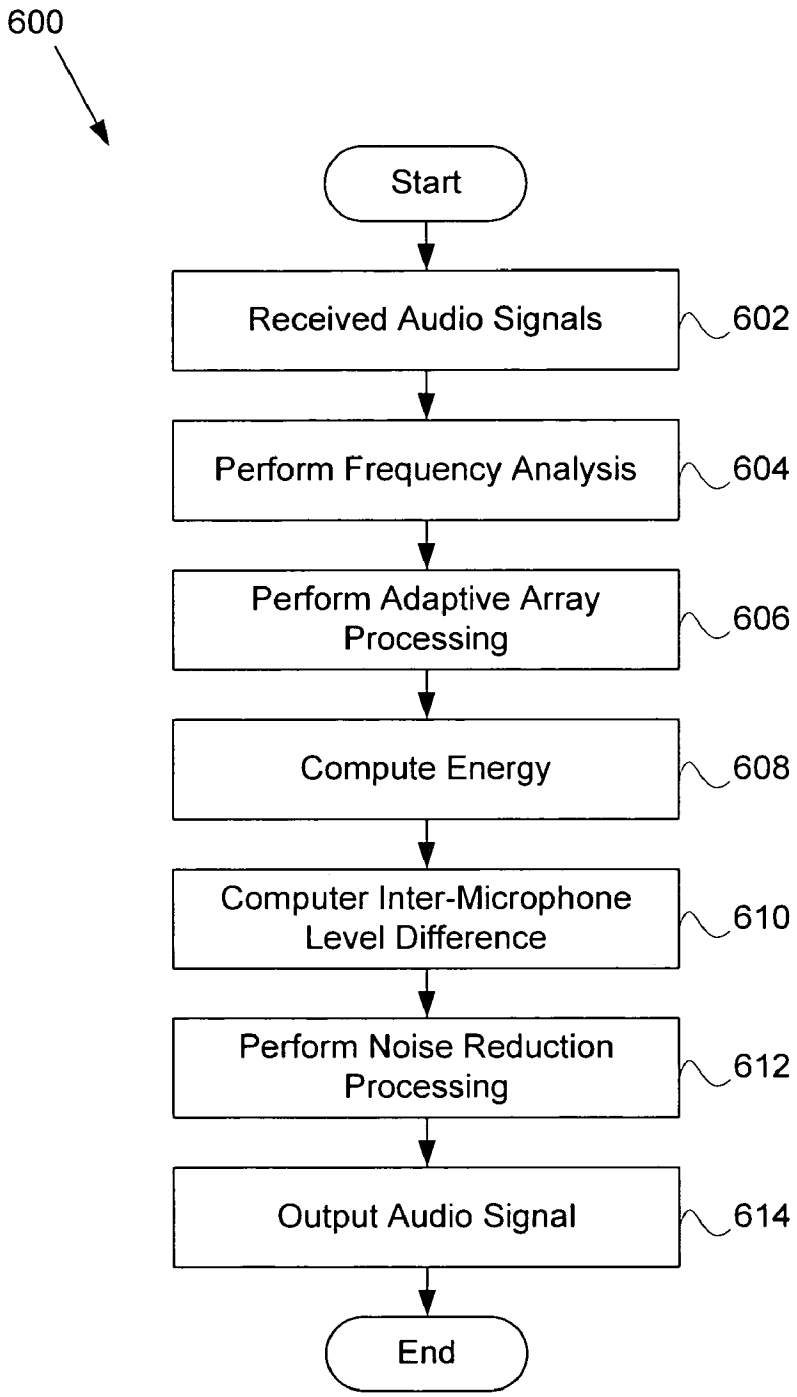
600
Start
Received Audio Signals
602
Perform Frequency Analysis
604
Perform Adaptive Array Processing
606
Compute Energy
608
Computer Inter-Microphone Level Difference
610
Perform Noise Reduction Processing
612
Output Audio Signal
614
End

FIG. 6

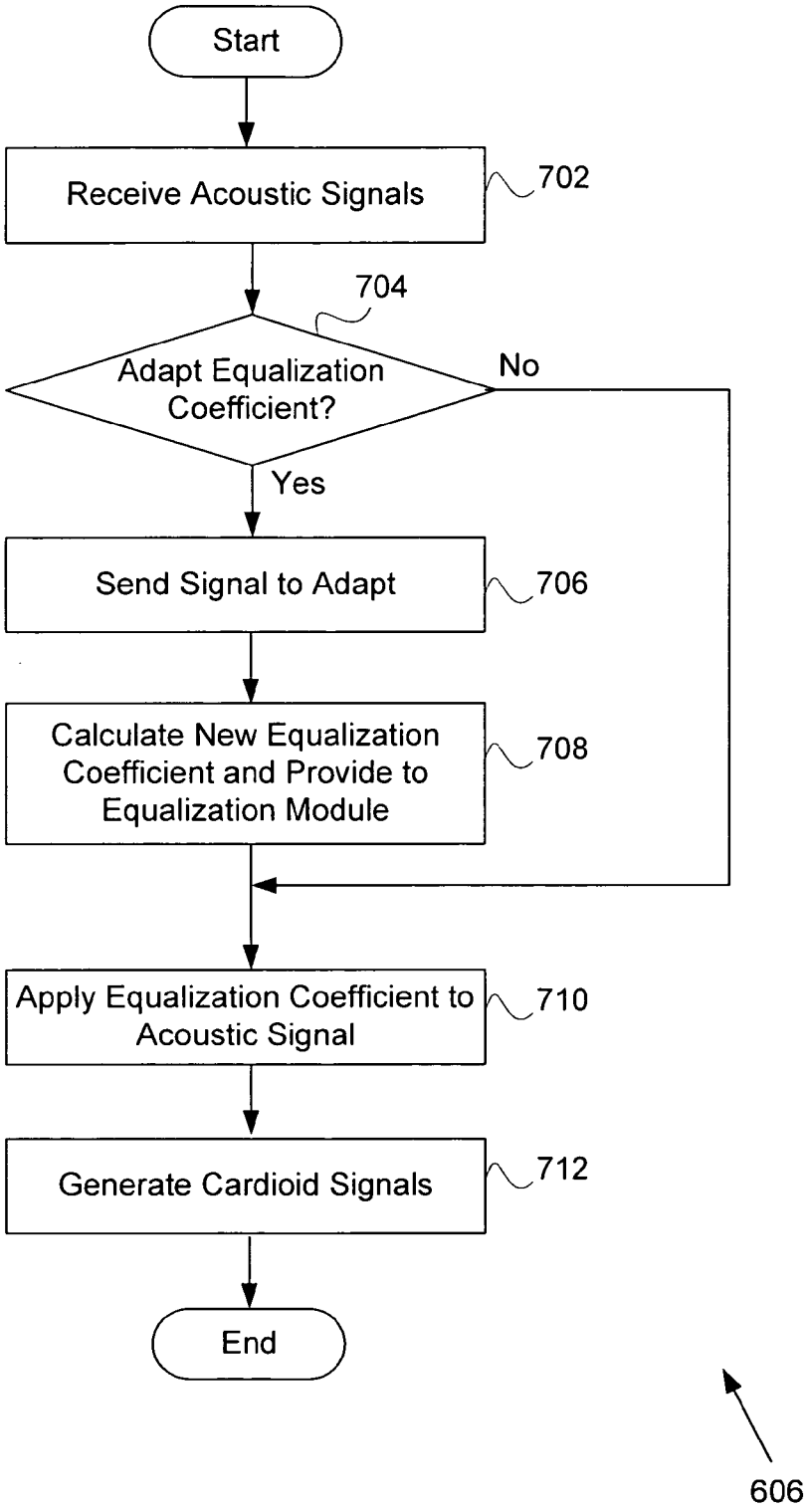
Start
Receive Acoustic Signals
702
704
Adapt Equalization Coefficient?
No
Yes
Send Signal to Adapt
706
Calculate New Equalization Coefficient and Provide to Equalization Module
708
Apply Equalization Coefficient to Acoustic Signal
710
Generate Cardioid Signals
712
End
606

FIG. 7

SYSTEM AND METHOD FOR PROVIDING CLOSE MICROPHONE ADAPTIVE ARRAY PROCESSING

CROSS-REFERENCE TO RELATED APPLICATION

The present application is a continuation-in-part of U.S. patent application Ser. No. 11/699,732 filed Jan. 29, 2007 and entitled "System and Method For Utilizing Omni-Directional Microphones for Speech Enhancement," which claims priority to U.S. Provisional Patent Application No. 60/850,928, filed Oct. 10, 2006 entitled "Array Processing Technique for Producing Long-Range ILD Cues with Omni-Directional Microphone Pair," both of which are herein incorporated by reference. The present application is also related to U.S. patent application Ser. No. 11/343,524, entitled "System and Method for Utilizing Inter-Microphone Level Differences for Speech Enhancement," which claims the priority benefit of U.S. Provision Patent Application No. 60/756,826, filed Jan. 5, 2006, and entitled "Inter-Microphone Level Difference Suppressor," all of which are also herein incorporated by reference.

BACKGROUND OF THE INVENTION

1. Field of Invention

The present invention relates generally to audio processing and more particularly to adaptive array processing in close microphone systems.

2. Description of Related Art

Presently, there are numerous methods for reducing background noise in speech recordings made in adverse environments. One such method is to use two or more microphones on an audio device. These microphones may be in prescribed positions and allow the audio device to determine a level difference between the microphone signals. For example, due to a space difference between the microphones, the difference in times of arrival of the signals from a speech source to the microphones may be utilized to localize the speech source. Once localized, the signals can be spatially filtered to suppress the noise originating from different directions.

In order to take advantage of the level differences between two omni-directional microphones, a speech source needs to be closer to one of the microphones. Typically, this means that a distance from the speech source to a first microphone should be shorter than a distance from the speech source to a second microphone. As such, the speech source should remain in relative closeness to both microphones, especially if both microphones are in close proximity, as may be required, for example, in mobile telephony applications.

A solution to the distance constraint may be obtained by using directional microphones. The use of directional microphones allows a user to extend an effective level difference between the two microphones over a larger range with a narrow inter-microphone level difference (ILD) beam. This may be desirable for applications where the speech source is not in as close proximity to the microphones, such as in push-to-talk (PTT) or videophone applications.

Disadvantageously, directional microphones have numerous physical and economical drawbacks. Typically, directional microphones are large in size and do not fit well in small devices (e.g., cellular phones). Additionally, directional microphones are difficult to mount since these microphones require ports in order for sounds to arrive from a plurality of directions. Furthermore, slight variations in manufacturing may result in a microphone mismatch. Finally, directional microphones are costly. This may result in more expensive manufacturing and production costs. Therefore, there is a desire to utilize characteristics of directional microphones in an audio device, without the disadvantages of using directional microphones, themselves.

SUMMARY OF THE INVENTION

Embodiments of the present invention overcome or substantially alleviate prior problems associated with noise suppression in close microphone systems. In exemplary embodiments, primary and secondary acoustic signals are received by acoustic sensors. The acoustic sensors may comprise a primary and a secondary omni-directional microphone. The acoustic signals are then separated into frequency sub-band signals for analysis.

In exemplary embodiments, the frequency sub-band signals may then be used to simulate two directional microphone responses (e.g., cardioid signals). An adaptive equalization coefficient may be applied to sub-band signals of the secondary acoustic signal. In accordance with exemplary embodiments, the application of the adaptive equalization coefficient allows for correction of microphone mismatch. Specifically, with respect to some embodiments, the adaptive equalization coefficient will align a null of a backward-facing cardioid pattern to be directed towards a desired sound source. A forward-facing cardioid pattern and the backward-facing cardioid pattern are generated based on the sub-band signals.

Utilizing cardioid signals of the forward-facing cardioid pattern and backward-facing cardioid pattern, noise suppression may be performed. In various embodiments, an energy spectrum or power spectrum is determined based on the cardioid signals. An inter-microphone level difference may then be determined and used to approximate a noise estimate. Based in part on the noise estimate, a gain mask may be determined. This gain mask is then applied to the primary acoustic signal to generate a noise suppressed signal. The resulting noise suppressed signal is output.

BRIEF DESCRIPTION OF THE DRAWINGS

FIG. **1***a* and FIG. **1***b* are diagrams of two environments in which embodiments of the present invention may be practiced.

FIG. **2** is a block diagram of an exemplary audio device implementing embodiments of the present invention.

FIG. **3** is a block diagram of an exemplary audio processing engine.

FIG. **4***a* and FIG. **4***b* are respective block diagrams of an exemplary structure of a differential array and an exemplary array processing module, according to some embodiments.

FIG. **5** is a block diagram of an exemplary adaptive array processing engine.

FIG. **6** is a flowchart of an exemplary method for providing noise suppression in an audio device having a close microphone array.

FIG. **7** is a flowchart of an exemplary method for performing adaptive array processing.

DESCRIPTION OF EXEMPLARY EMBODIMENTS

The present invention provides exemplary systems and methods for adaptive array processing in close microphone systems. In exemplary embodiments, the close microphones used comprise omni-directional microphones. Simulated directional patterns (i.e., cardioid patterns) may be created by

processing acoustic signals received from the microphones. The cardioid patterns may be adapted to compensate for microphone mismatch. In one embodiment, the adaptation may result in a null of a backward-facing cardioid pattern to be directed towards a desired audio source. The resulting signals from the adaptation may then be utilized in a noise suppression system and/or speech enhancement system.

Array processing (AP) technology relies on accurate phase and/or level match of the microphones to create the desired cardioid patterns. Without proper calibration, even a small phase mismatch between the microphones may cause serious deterioration of an intended directivity patterns which may in turn introduce distortion to an inter-microphone level difference (ILD) map and either produce speech loss or noise leakage at a system output. Calibration for phase mismatch is essential for current AP technology to work given observed mismatches in microphone responses inherent in the manufacturing processes. However, calibration of each microphone pair on a manufacturing line is very expensive. For these reasons, a technology that does not require manufacturing line calibration for each microphone pair is highly desirable.

Embodiments of the present invention may be practiced on any audio device that is configured to receive sound such as, but not limited to, cellular phones, phone handsets, headsets, and conferencing systems. While some embodiments of the present invention will be described in reference to operation on a cellular phone, the present invention may be practiced on any audio device.

Referring to FIG. **1**, an environment in which embodiments of the present invention may be practiced is shown. A user may provide an audio (speech) source **102** to an audio device **104**. The exemplary audio device **104** may comprise two microphones: a primary microphone **106** relative to the audio source **102** and a secondary microphone **108** located a distance away from the primary microphone **106**. In exemplary embodiments, the microphones **106** and **108** comprise omnidirectional microphones.

While the microphones **106** and **108** receive sound (i.e., acoustic signals) from the audio source **102**, the microphones **106** and **108** also pick up noise **110**. Although the noise **110** is shown coming from a single location in FIG. **1**, the noise **110** may comprise any sounds from one or more locations different than the audio source **102**, and may include reverberations and echoes. The noise **110** may be stationary, non-stationary, and/or a combination of both stationary and non-stationary noise.

Exemplary embodiments of the present invention may utilize level differences (e.g., energy differences) between the acoustic signals received by the two microphones **106** and **108** independent of how the level differences are obtained. Ideally, the primary microphone **106** should be much closer to a mouth reference point (MRP) **112** of the audio source **102** than the secondary microphone **108** resulting in an intensity level that is higher for the primary microphone **106** and a larger energy level during a speech/voice segment. However, in accordance with the present invention, the audio source **102** is located a distance away from the primary and secondary microphones **106** and **108**. For example, the audio device **104** may be a view-to-talk device (i.e., user watches a display on the audio device **104** while talking) or comprise a headset with short form factors. As such, the level difference between the primary and secondary microphones **106** and **108** may be very low.

FIG. **1***b* illustrates positioning of the primary and secondary microphones **106** and **108** on the audio device **104**, according to one embodiment. The primary and secondary microphone **106** and **108** may be located on a same axis as the MRP **112**. A deviation from this audio source axis should not exceed $\beta=25$ degrees in any direction.

An angle θ defines a cone width, while an angle γ defines a deviation of the microphone array with respect to the MRP **112** direction. As such, γ may be constrained by an equation: $\gamma \leqq \theta-\beta$.

In exemplary embodiments, physical separation between the primary and secondary microphones **106** and **108** should be minimized. An approximate effective acoustic distance may be mathematically represented by:

$$D_{eff}=\min(D1+D2,\ D1+D3),$$

whereby for a narrowband system $0.5\text{ cm}<D_{eff}<4\text{ cm}$ and for a wideband system $1.0\text{ cm}<D_{eff}<2\text{ cm}$.

Alternatively, the effective acoustic distance may be obtained by measuring the primary and secondary microphone **106** and **108** responses. Initially, a transfer function of a source at 0=0 degrees to each microphone **106** and **108** may be determined which may be represented as:

$$H_1(f)=|H_1(f)|e^{\Phi 1(f)} \text{ and}$$

$$H_2(f)=|H_2(f)|e^{\Phi 2(f)}.$$

An inter-microphone phase difference may be approximated by $\phi(f)=\phi_1(f)-\phi_2(f)$. As a result, the effective acoustic distance may be

$$D_{eff} = -\phi_1(f)\frac{c}{2\pi f},$$

where c is the speed of sound in air.

Referring now to FIG. **2**, the exemplary audio device **104** is shown in more detail. In exemplary embodiments, the audio device **104** is an audio communication device that comprises a processor **202**, the primary microphone **106**, the secondary microphone **108**, an audio processing engine **204**, and an output device **206**. The audio device **104** may comprise further components necessary for audio device **104** operations but not necessarily utilized with respect to embodiments of the present invention. The audio processing engine **204** will be discussed in more detail in connection with FIG. **3**.

Upon reception by the microphones **106** and **108**, the acoustic signals are converted into electric signals (i.e., a primary electric signal and a secondary electric signal). The electric signals may, themselves, be converted by an analog-to-digital converter (not shown) into digital signals for processing in accordance with some embodiments. In order to differentiate the acoustic signals, the acoustic signal received by the primary microphone **106** is herein referred to as the primary acoustic signal, while the acoustic signal received by the secondary microphone **108** is herein referred to as the secondary acoustic signal.

The output device **206** is any device which provides an audio output to the user. For example, the output device **206** may comprise an earpiece of a headset or handset, or a speaker on a conferencing device.

FIG. **3** is a detailed block diagram of the exemplary audio processing engine **204**. In exemplary embodiments, the audio processing engine **204** is embodied within a memory device or storage medium. In operation, the acoustic signals received from the primary and secondary microphones **106** and **108** are converted to electric signals and processed through a frequency analysis module **302**. In one embodiment, the frequency analysis module **302** takes the acoustic signals and mimics the frequency analysis of the cochlea (i.e., cochlear

domain) simulated by a filter bank. In one example, the frequency analysis module **302** separates the acoustic signals into frequency sub-bands. A sub-band is the result of a filtering operation on an input signal, where the bandwidth of the filter is narrower than the bandwidth of the signal received by the frequency analysis module **302**. Alternatively, other filters such as short-time Fourier transform (STFT), sub-band filter banks, modulated complex lapped transforms, cochlear models, wavelets, etc. can be used for the frequency analysis and synthesis. Because most sounds (e.g., acoustic signals) are complex and comprise more than one frequency, a sub-band analysis on the acoustic signal determines what individual frequencies are present in the complex acoustic signal during a frame (e.g., a predetermined period of time). According to one embodiment, the frame is 8 ms long. The results may comprise signals in a fast cochlea transform (FCT) domain.

Once the sub-band signals are determined, the sub-band signals are forwarded to an adaptive array processing (AAP) engine **304**. The AAP engine **304** is configured to adaptively process the primary and secondary signals to create synthetic directional patterns (i.e., synthetic directional microphone responses) for the close microphone array (e.g., primary and secondary microphones **106** and **108**). The directional patterns may comprise a forward-facing cardioid pattern based on the primary acoustic (sub-band) signal and a backward-facing cardioid pattern based on the secondary (sub-band) acoustic signal. In exemplary embodiments, the sub-band signals may be adapted such that a null of the backward-facing cardioid pattern is directed towards the audio source **102**. The AAP engine **304** is configured to process the sub-band signals using two networks of first-order differential arrays. In essence, this processing replaces two cardioid or directional microphones with two omni-directional microphones.

Pattern generation using differential arrays (DA) requires use of fractional delays whose value may depend on a distance between the microphones. In the FCT domain, these patterns may be modeled and implemented by phase shifts on the sub-band signals (e.g., analytical signals from the microphones—ACS). As such, differential networks may be implemented in the FCT domain with two networks per tap (one network for each of the two cardioid patterns). Another advantage of implementing the DA in the FCT domain is that different fractional delays may be implemented in different frequency sub-bands. This may be important in systems where the distance between the microphones is frequency dependent (e.g., due to the phase distortions introduced by diffraction in real devices).

An exemplary structure of a differential array is shown in FIG. **4***a*. For sound arriving from a back of the array (θ=180 deg) an output $y_1(t)$ is zero if a delay line **402** introduces a delay equal to an acoustic delay between the primary and secondary microphones **106** and **108**. This may be represented by

$$\tau = \frac{d}{c}$$

where c is the speed of sound in air (i.e., 340 m/s). For sound arriving from a front of the microphone array, the differential array acts as a differentiator for frequencies whose wavelength is large compared to the distance d between the two microphones **106** and **108** (e.g., an approximation error is less than 1 dB if the wavelength is **4***d*). For sources arriving from other directions, differentiator behavior is still present but additional broadband attenuation may be applied. The attenuation follows a "cardioid" pattern, which may be represented mathematically as

$$\Delta(\theta) = \frac{1}{2}[1 + \cos(\theta)].$$

FIG. **4***b* illustrates an exemplary array processing module **410** utilizing a similar differential array structure. In exemplary embodiments, the array processing module **410** may be embodied within the AAP engine **304**. The goal of the array processing module **410** is to implement two cardioid patterns, one facing front (i.e., forward-facing cardioid pattern) and one facing back (i.e., backward-facing cardioid pattern). In exemplary embodiments, two first-order differential arrays that share the same two microphones (i.e., the primary and secondary microphones **106** and **108**) are used. In one embodiment, the forward cardioid signal is assumed to be based on the primary acoustic signal, and may be mathematically represented by

$$c_1(n,k)=x_1(n,k)-w_1w_0\cdot x_1(n,k),$$

where k is an index of a kth frequency tap, and n is a sample index. Similarly, the backward cardioid signal, assumed to be based on the secondary acoustic signal, may be mathematically represented by

$$c_2(n,k)=x_2(n,k)\cdot w_0-w_2\cdot x_1(n,k).$$

w_0 comprises an equalization coefficient. In one embodiment, the equalization coefficient comprises a phase shift or time delay that aligns the two microphones **106** and **108** by modeling their phase mismatch. The equalization coefficient may be provided by an equalization module **412** In some embodiments, during array processing calibration, w_0 may be first obtained by least squares estimation and then applied to the secondary channel (i.e., channel processing the secondary acoustic signal) before estimating w_1 and w_2.

In exemplary embodiments, w_1 and w_2 comprise delay coefficients which are applied to create the cardioid signals and patterns. For a completely symmetrical acoustic setup with matched microphones **106** and **108**, $w_1=w_2$, whereby w_1 and w_2 may be determined by assuming that the microphones are matched (e.g., offline and prior to manufacturing). However, in practice, the microphones **106** and **108** may have different phase characteristics requiring the coefficients be computed independently. In exemplary embodiments, a w_1 delay node **414** and a w_2 delay node **416** apply the coefficients (w_1 and w_2) to their respective acoustic signals in order to create the two cardioid patterns.

In accordance with exemplary embodiments, w_1 and w_2 may be derived from experimentation. For example, a signal may be recorded from various directions (e.g., front, back, and one side). The microphones are then matched and an analysis of the back and front signals is performed to determine w_1 and w_2. Thus, in exemplary embodiments, w_1 and w_2 may be constants set prior to manufacturing.

Referring back to FIG. **3**, the cardioid signals (i.e., a signal implementing the forward-facing cardioid pattern and a signal implementing the backward-facing cardioid pattern) are then forwarded to the energy module **306** which computes energy (power) estimates or spectra associated with the cardioid signals. For simplicity, the following discussion assumes the forward-facing cardioid pattern is based on the sub-band signals from the primary microphone **106** and the backward-facing cardioid pattern are based on the sub-band signals from the secondary microphone **108**. The power esti-

mates are computed based on a cardioid primary signal (c_1) of the forward-facing cardioid and cardioid secondary signal (c_2) of a backward facing cardioid during an interval of time for each frequency band. The power estimate may be based on bandwidth of the cochlea channel and the cardioid signals. In one embodiment, the power estimate may be mathematically determined by squaring and integrating an absolute value of the frequency analyzed cardioid signals. For example, the energy level associated with the primary microphone signal may be determined by

$$E_1(n, k) = \sum_{frame} |c_1(n, k)|^2,$$

and the energy level associated with the secondary microphone signal may be determined by

$$E_2(n, k) = \sum_{frame} |c_2(n, k)|^2,$$

where n represents a time index (e.g., t=0, 1, . . . N_{frame}) and k represents a frequency index (e.g., k=0, 1, . . . K).

Given the calculated energy levels, an inter-microphone level difference (ILD) may be determined by an ILD module **308**. The ILD may be determined by the ILD module **308** in a non-linear manner by taking a ratio of the energy levels. This may be mathematically represented by

$$\mathrm{ILD}(n,k)=E_1(n,k)/E_2(n,k).$$

Applying the determined energy levels to this ILD equation results in

$$ILD(n, k) = \frac{\sum_{frame} |c_1(n, k)|^2}{\sum_{frame} |c_2(n, k)|^2}.$$

The ILD between the outputs of the synthetic cardioids may establish a spatial map where the ILD is maximum in the front of the microphone array, and minimum in the back of the microphone array. The map is unambiguous in these two directions, so if the speech is known to be in either direction (generally in front) the noise suppression system **310** may use this feature to suppress noise from all other directions.

For a forward direction the ILD is, in theory, infinite, and extends to negative infinity in a backward direction. In practice, magnitudes squared of the cardioid signals may be averaged or "smoothed" over a frame to compute the ILD.

Iso-ILD regions may describe hyperboloids (e.g., cones if centers of the forward-facing and backward-facing cardioid patterns are assumed to be the same) around the axis of the array. Thus, only two directions have a one-to-one correspondence with the ILD function (i.e. is unique), front and back. The remaining directions comprise rotational ambiguity. This ambiguity is commonly known as "cones" of confusion. This ILD map is different from the ILD map obtained with spread microphones, where the ILD is maximum for near sources and zero otherwise. The desired speech source is assumed to have a maximum ILD.

Once the ILD is determined, the cardioid sub-band signals are processed through a noise suppression system **310**. In exemplary embodiments, the noise suppression system **310** comprises a noise estimate module **312**, a filter module **314**, a filter smoothing module **316**, a masking module **318**, and a frequency synthesis module **320**.

In exemplary embodiments, the noise estimate is based on the acoustic signal from the primary microphone **106** (e.g., forward-facing cardioid signal). The exemplary noise estimate module **312** is a component which can be approximated mathematically by

$$N(n,k)=\lambda_1(n,k)E_1(n,k)+(1-\lambda_1(n,k))\min[N(n-1,k),E_1(n,k)]$$

according to one embodiment of the present invention. As shown, the noise estimate in this embodiment is based on minimum statistics of a current energy estimate of the primary acoustic signal, $E_1(n,k)$ and a noise estimate of a previous time frame, N(n−1, k). As a result, the noise estimation is performed efficiently and with low latency.

$\lambda_1(n,k)$ in the above equation is derived from the ILD approximated by the ILD module **308**, as

$$\lambda_I(n, k) = \begin{cases} \approx 0 \text{ if } ILD(n, k) < threshold \\ \approx 1 \text{ if } ILD(n, k) > threshold \end{cases}$$

That is, when ILD is smaller than a threshold value (e.g., threshold=0.5) above which desired sound is expected to be, λ_1 is small, and thus the noise estimate module **312** follows the noise closely. When ILD starts to rise (e.g., because speech is present within the large ILD region), λ_1 increases. As a result, the noise estimate module **312** slows down the noise estimation process and the desired sound energy does not contribute significantly to the final noise estimate. Therefore, some embodiments of the present invention may use a combination of minimum statistics and desired sound detection to determine the noise estimate.

A filter module **314** then derives a filter estimate based on the noise estimate. In one embodiment, the filter is a Wiener filter. Alternative embodiments may contemplate other filters. Accordingly, the Wiener filter may be approximated, according to one embodiment, as

$$W = \left(\frac{P_s}{P_s + P_n}\right)^{\varphi},$$

where P_s is a power spectral density of speech or desired sound, and P_n is a power spectral density of noise. According to one embodiment, P_n is the noise estimate, N(n,k), which is calculated by the noise estimate module **312**. In an exemplary embodiment, $P_s=E_1(n,k)-\gamma N(n,k)$, where $E_1(n,k)$ is the energy estimate associated with the primary acoustic signal (e.g., the cardioid primary signal) calculated by the energy module **306**, and N(n,k) is the noise estimate provided by the noise estimate module **312**. Because the noise estimate may change with each frame, the filter estimate may also change with each frame.

γ is an over-subtraction term which is a function of the ILD. γ compensates bias of minimum statistics of the noise estimate module **312** and forms a perceptual weighting. Because time constants are different, the bias will be different between portions of pure noise and portions of noise and speech. Therefore, in some embodiments, compensation for this bias may be necessary. In exemplary embodiments, γ is determined empirically (e.g., 2-3 dB at a large ILD, and is 6-9 dB at a low ILD).

ϕ in the above exemplary Wiener filter equation is a factor which further limits the noise estimate. ϕ can be any positive value. In one embodiment, non-linear expansion may be obtained by setting ϕ to 2. According to exemplary embodiments, ϕ is determined empirically and applied when a body of

$$W = \left(\frac{P_s}{P_s + P_n}\right)$$

falls below a prescribed value (e.g., 12 dB down from the maximum possible value of W, which is unity).

Because the Wiener filter estimation may change quickly (e.g., from one frame to the next frame) and noise and speech estimates can vary greatly between each frame, application of the Wiener filter estimate, as is, may result in artifacts (e.g., discontinuities, blips, transients, etc.). Therefore, an optional filter smoothing module **316** is provided to smooth the Wiener filter estimate applied to the acoustic signals as a function of time. In one embodiment, the filter smoothing module **316** may be mathematically approximated as

$$M(n,k)=\lambda_s(n,k)W(n,k)+(1-\lambda_s(n,k))M(n-1,k),$$

where λ_s is a function of the Wiener filter estimate and the primary microphone energy, E_1.

As shown, the filter smoothing module **316**, at time-sample n will smooth the Wiener filter estimate using the values of the smoothed Wiener filter estimate from the previous frame at time (n−1). In order to allow for quick response to the acoustic signal changing quickly, the filter smoothing module **316** performs less smoothing on quick changing signals, and more smoothing on slower changing signals. This is accomplished by varying the value of λ_s according to a weighed first order derivative of E_1 with respect to time. If the first order derivative is large and the energy change is large, then λ_s is set to a large value. If the derivative is small then λ_s is set to a smaller value.

After smoothing by the filter smoothing module **316**, the primary acoustic signal is multiplied by the smoothed Wiener filter estimate to estimate the speech. In the above Wiener filter embodiment, the speech estimate is approximated by $S(n,k)=c_1(n,k)\,M(n,k)$, where $c_1(n,k)$ is the cardioid primary signal. In exemplary embodiments, the speech estimation occurs in the masking module **318**.

Next, the speech estimate is converted back into time domain from the cochlea domain. The conversion comprises taking the speech estimate, S(n,k), and adding together the phase shifted signals of the cochlea channels in a frequency synthesis module **320**. Alternatively, the conversion comprises taking the speech estimate, S(n,k), and multiplying this with an inverse frequency of the cochlea channels in the frequency synthesis module **320**. Once conversion is completed, the signal is output to the user.

It should be noted that the system architecture of the audio processing engine **204** of FIG. **3** and the array processing module **410** of FIG. **4***b* is exemplary. Alternative embodiments may comprise more components, less components, or equivalent components and still be within the scope of embodiments of the present invention. Various modules of the audio processing engine **204** may be combined into a single module. For example, the functions of the ILD module **308** may be combined with the functions of the energy module **306**. As a further example, the functionality of the filter module **314** may be combined with the functionality of the filter smoothing module **316**.

Referring now to FIG. **5**, the exemplary AAP engine **304** is shown in more detail. In exemplary embodiments, the AAP engine **304** comprises the array processing module **410**. However, the equalization module **412** applies an adaptive equalization coefficient determined based on an adaptation control module **502** and an adaptation processor **504**. The equalization coefficient is configured to compensate for microphone mismatch post-manufacturing.

The exemplary adaptation control module **502** is configured to operate as a switch to activate the adaptation processor **504**, which will adjust the equalization coefficient. In one embodiment, the adaptation may be triggered by identifying frames dominated by speech using a fixed (non-adaptive) close-microphone array derived from the primary sub-band signal ($x_1(k,n)$) and secondary sub-band signal ($x_2(k,n)$). This second array comprises the same structure as discussed in connection with FIG. **4***b* but without the adaptive coefficient w_0. The coefficients w_1 and w_2 of this array include the phase shifts due to acoustical properties of the audio device **104** and exclude particular microphone properties. The power ratio between the front-facing and back-facing cardioid signals produced by this array may be tracked and used to determine if a signal is active in the forward direction, in which case the adaptive equalization coefficient can be updated. In some embodiments, the equalization coefficient is only adapted for taps with high signal-to-noise ratio (SNR). Thus, the adaptation control module **502** may look for both a signal and proper direction. Adaptation may be performed when the probability that the observed components correspond to speech coming from the desired direction (e.g., from the front direction). In these situations, the adaptation control module **502** may have a value of one. However, if a weak signal or no signal is being received from the front/forward direction, then the value from the adaption control module **502** may be zero. If adaptation is determined to be required, then the adaptation control module **502** sends instructions to the adaptation processor **504**.

The exemplary adaptation processor **504** is configured to adjust the equalization coefficient such that a desired speech signal is cancelled by a backward-facing cardioid pattern. When the adaptation control module **502** indicates there is a desired signal coming from the front/forward direction (i.e., value=1), the adaptation processor **504** adapts the equalization coefficient to essentially cancel the desired signal in order to create a zero or null in that direction. The adaptation may be performed for each input sample, per frame, or in a batch.

In exemplary embodiments, the adaptation is performed using a normalized least mean square (NLMS) algorithm having a small step size. NLMS may, in accordance with one embodiment, minimize a square of a calculated error. The error may be mathematically determined as $E=x_1-x_2\cdot w_2\cdot w_2$, in accordance with one embodiment. Thus, by setting the derivative of E^2 to 0, w_0 may be determined. The output of the adaptation processor **504** (i.e., w_0) is then provided to the adaptive equalization module **412**. It should be noted that the magnitude of w_0 is kept to a value of one, in exemplary embodiments. This may cause the convergence to occur faster. The equalization module **412** may then apply the equalization coefficient to the secondary sub-band signal.

FIG. **6** is a flowchart **600** of an exemplary method for providing noise suppression and/or speech enhancement with close microphones. In step **602**, acoustic signals are received by the primary microphone **106** and the secondary microphone **108**. In exemplary embodiments, the microphones are omni-directional microphones in close proximity to each other compared to the audio source **102**. In some embodiments, the acoustic signals are converted by the microphones

to electronic signals (i.e., the primary electric signal and the secondary electric signal) for processing.

In step **604**, the frequency analysis module **302** performs frequency analysis on the primary and secondary acoustic signals. According to one embodiment, the frequency analysis module **302** utilizes a filter bank to determine frequency sub-bands for the primary and secondary acoustic signals.

In step **606**, adaptive array processing is then performed on the sub-band signals by the AAP engine **304**. In exemplary embodiments, the AAP engine **304** is configured to determine the cardioid primary signal and the cardioid secondary signal by delaying, subtracting, and applying an equalization coefficient to the acoustic signals captured by the primary and secondary microphones **106** and **108**. Step **606** will be discussed in more detail in connection with FIG. **7**.

In step **608**, energy estimates for the cardioid primary and secondary signals are computed. In one embodiment, the energy estimates are determined by the energy module **306**. In one embodiment, the energy module **306** utilizes a present cardioid signal and a previously calculated energy estimate to determine the present energy estimate of the present cardioid signal.

Once the energy estimates are calculated, inter-microphone level differences (ILD) may be computed in step **610**. In one embodiment, the ILD is calculated based on a non-linear combination of the energy estimates of the cardioid primary and secondary signals. In exemplary embodiments, the ILD is computed by the ILD module **308**.

Once the ILD is determined, the cardioid primary and secondary signals are processed through a noise suppression system in step **612**. Based on the calculated ILD and cardioid primary signal, noise may be estimated. A filter estimate may then computed by the filter module **314**. In some embodiments, the filter estimate may be smoothed. The smoothed filter estimate is applied to the acoustic signal from the primary microphone **106** to generate a speech estimate. The speech estimate is then converted back to the time domain. Exemplary conversion techniques apply an inverse frequency of the cochlea channel to the speech estimate.

Once the speech estimate is converted, the audio signal may now be output to the user in step **614**. In some embodiments, the electronic (digital) signals are converted to analog signals for output. The output may be via a speaker, earpieces, or other similar devices.

Referring now to FIG. **7**, a flowchart of an exemplary method for performing adaptive array processing (step **606**) is shown. In operation, microphones (e.g., microphones **106** and **108**) of the microphone array may be mismatched. As such, the adaptive array processing (AAP) engine **304** adaptively updates the equalization coefficient applied by the array processing module **410** to compensate for the microphone mismatch. In step **702**, the acoustic signals are received by the AAP engine **304**. In exemplary embodiments, the acoustic signals comprise sub-band signals post-processing by the frequency analysis module **302**.

In step **704**, a determination is made as to whether to adapt the equalization coefficient. In exemplary embodiments, the adaptation control module **502** analyzes the sub-band signals to determine if adaptation may be needed. The analysis may comprise, for example, determining if energy is high in a front direction of the microphone array.

If adaptation is required, then an adaptation signal is sent in step **706**. In exemplary embodiments, the adaptation control module **502** will send the adaptation signal to the adaptation processor **504**.

The adaptation processor **504** then calculates a new equalization coefficient in step **708**. In one embodiment, the adaptation is performed using a normalized least mean square (NLMS) algorithm having a small step size and no regularization. NLMS may, in accordance with one embodiment, minimize a square of a calculated error. The new equalization coefficient is then provided to the equalization module **412**.

In step **710**, the equalization coefficient is applied to the acoustic signal. In exemplary embodiments, the equalization coefficient may be applied to one or more sub-bands of the secondary acoustic signal to generate an equalized sub-band signal.

The cardioid signals are then generated in step **712**. In various embodiments, the equalized sub-band signal along with the sub-band signal from the primary acoustic microphone **106** are delayed via delay nodes **414** and **416**, respectively. The results may then be subtracted from the opposite sub-band signal to obtain the cardioid signals.

The above-described modules can be comprised of instructions that are stored on storage media. The instructions can be retrieved and executed by the processor **202**. Some examples of instructions include software, program code, and firmware. Some examples of storage media comprise memory devices and integrated circuits. The instructions are operational when executed by the processor **202** to direct the processor **202** to operate in accordance with embodiments of the present invention. Those skilled in the art are familiar with instructions, processor(s), and storage media.

The present invention is described above with reference to exemplary embodiments. It will be apparent to those skilled in the art that various modifications may be made and other embodiments can be used without departing from the broader scope of the present invention. For example, the microphone array discussed herein comprises a primary and secondary microphone **106** and **108**. However, alternative embodiments may contemplate utilizing more microphones in the microphone array. Therefore, these and other variations upon the exemplary embodiments are intended to be covered by the present invention.

The invention claimed is:

1. A method for adaptive processing of a close microphone array in a noise suppression system, comprising:

receiving a primary acoustic signal and a secondary acoustic signal;

performing frequency analysis on the primary and secondary acoustic signals to obtain primary and secondary sub-band signals;

applying an adaptive equalization coefficient to a secondary sub-band signal;

generating a forward-facing cardioid pattern and a backward-facing cardioid pattern based on the sub-band signals;

utilizing cardioid signals of the forward-facing cardioid pattern and backward-facing cardioid pattern to perform noise suppression; and

outputting a noise suppressed signal.

2. The method of claim **1** further comprising determining whether to adapt the adaptive equalization coefficient.

3. The method of claim **2** wherein determining whether to adapt comprises verifying if a desired sound is present in a forward direction of a second non-adaptive close microphone array.

4. The method of claim **2** wherein determining whether to adapt comprises verifying if a desired sound is present in a forward direction of the close microphone array.

5. The method of claim **4** wherein verifying is based on energy level of the acoustic signals.

6. The method of claim **4** wherein verifying is based on signal-to-noise ratio of the acoustic signals.

7. The method of claim 1 further comprising adapting the adaptive equalization coefficient.

8. The method of claim 7 wherein adapting comprises determining an error and applying a normalized least mean square function to the error to determine a new adaptive equalization coefficient.

9. The method of claim 1 wherein utilizing the cardioid signals to perform noise suppression comprises determining an energy spectrum for each cardioid signal.

10. The method of claim 1 wherein utilizing the cardioid signals to perform noise suppression comprises determining an inter-microphone level difference between the cardioid signals of the forward-facing and backward-facing cardioid patterns.

11. The method of claim 1 wherein utilizing the cardioid signals to perform noise suppression comprises determining a noise estimate based in part on the cardioid signals.

12. The method of claim 11 further comprising determining a gain mask based in part on the noise estimate.

13. The method of claim 12 further comprising applying the gain mask to the primary acoustic signal to suppress noise.

14. A system for adaptive processing of a close microphone array in a noise suppression system, comprising:

a frequency analysis module configured to perform frequency analysis on primary and secondary acoustic signals to obtain primary and secondary sub-band signals;

an adaptive array processing engine configured to apply an adaptive equalization coefficient to a secondary sub-band signal and to generate a forward-facing cardioid pattern and a backward-facing cardioid pattern based on the sub-band signals;

a noise suppression system configured to use cardioid signals of the forward-facing cardioid pattern and backward-facing cardioid pattern to perform noise suppression; and

an output device configured to output a noise suppressed signal.

15. The system of claim 14 wherein the adaptive array processing engine comprises an adaptation control configured to determine whether to adapt the adaptive equalization coefficient.

16. The system of claim 14 wherein the adaptive array processing engine comprises an adaptation processor configured to determine a new adaptive equalization coefficient.

17. The system of claim 14 wherein the noise suppression system comprises an inter-microphone level difference module configured to determine an inter-microphone level difference between the cardioid signals of the forward-facing and backward-facing cardioid patterns.

18. The system of claim 14 wherein the noise suppression system comprises a noise estimate module configured to determine a noise estimate based in part on the cardioid signals.

19. The system of claim 18 wherein the noise suppression system comprises a filter module configured to determine a gain mask based in part on the noise estimate.

20. The method of claim 19 wherein the noise suppression system comprises a masking module configured to apply the gain mask to the primary acoustic signal to suppress noise.

21. A machine readable medium having embodied thereon a program, the program providing instructions for a method for adaptive processing of a close microphone array in a noise suppression system, comprising:

receiving a primary acoustic signal and a secondary acoustic signal;

performing frequency analysis on the primary and secondary acoustic signals to obtain primary and secondary sub-band signals;

applying an adaptive equalization coefficient to a secondary sub-band signal;

generating a forward-facing cardioid pattern and a backward-facing cardioid pattern based on the sub-band signals;

utilizing cardioid signals of the forward-facing cardioid pattern and backward-facing cardioid pattern to perform noise suppression; and

outputting a noise suppressed signal.

* * * * *