US008362575B2

(12) **United States Patent**
Kwok et al.

(10) **Patent No.: US 8,362,575 B2**
(45) **Date of Patent: Jan. 29, 2013**

(54) **CONTROLLING THE SHAPE OF SOURCE/DRAIN REGIONS IN FINFETS**

(75) Inventors: **Tsz-Mei Kwok**, Hsin-Chu (TW); **Chien-Chang Su**, Kaohsiung (TW); **Kuan-Yu Chen**, Taipei (TW); **Hsueh-Chang Sung**, Zhubei (TW); **Hsien-Hsin Lin**, Hsin-Chu (TW)

(73) Assignee: **Taiwan Semiconductor Manufacturing Company, Ltd.**, Hsin-Chu (TW)

(*) Notice: Subject to any disclaimer, the term of this patent is extended or adjusted under 35 U.S.C. 154(b) by 344 days.

(21) Appl. No.: **12/831,925**

(22) Filed: **Jul. 7, 2010**

(65) **Prior Publication Data**

US 2011/0073952 A1 Mar. 31, 2011

Related U.S. Application Data

(60) Provisional application No. 61/246,883, filed on Sep. 29, 2009.

(51) **Int. Cl.**

H01L 27/088	(2006.01)
H01L 21/70	(2006.01)
H01L 21/02	(2006.01)
H01L 29/06	(2006.01)
H01L 29/04	(2006.01)
H01L 23/48	(2006.01)
H01L 23/52	(2006.01)
H01L 29/40	(2006.01)

(52) **U.S. Cl.** **257/401**; 257/368; 257/616; 257/623; 257/628; 257/754; 257/E27.06; 257/E29.004; 257/E29.005; 257/E29.025; 257/E29.027; 257/E29.104; 257/E29.12; 257/E29.121; 257/E29.122

(58) **Field of Classification Search** ..... None
See application file for complete search history.

(56) **References Cited**

U.S. PATENT DOCUMENTS

6,706,571	B1	3/2004	Yu et al.	
6,858,478	B2	2/2005	Chau et al.	
6,960,517	B2 *	11/2005	Rios et al.	438/595
7,190,050	B2	3/2007	King et al.	
7,247,887	B2	7/2007	King et al.	
7,265,008	B2	9/2007	King et al.	
7,425,500	B2 *	9/2008	Metz et al.	438/607
7,508,031	B2	3/2009	Liu et al.	
7,528,465	B2	5/2009	King et al.	

(Continued)

OTHER PUBLICATIONS

Tan, K-M et al., "Sub-30nm Strained p-Channel Fin-Type Field-Effect Transistors with Condensed SiGe Source/Drain Stressors," Japanese Journal of Applied Physics, vol. 46, No. 4B, 2007, pp. 2058-2061.

Primary Examiner — Hoang-Quan Ho
(74) *Attorney, Agent, or Firm* — Slater & Matsil, L.L.P.

(57) **ABSTRACT**

An integrated circuit structure includes a fin field-effect transistor (FinFET) including a semiconductor fin over and adjacent to insulation regions; and a source/drain region over the insulation regions. The source/drain region includes a first and a second semiconductor region. The first semiconductor region includes silicon and an element selected from the group consisting of germanium and carbon, wherein the element has a first atomic percentage in the first semiconductor region. The first semiconductor region has an up-slant facet and a down-slant facet. The second semiconductor region includes silicon and the element. The element has a second atomic percentage lower than the first atomic percentage. The second semiconductor region has a first portion on the up-slant facet and has a first thickness. A second portion of the second semiconductor region, if any, on the down-slant facet has a second thickness smaller than the first thickness.

18 Claims, 6 Drawing Sheets

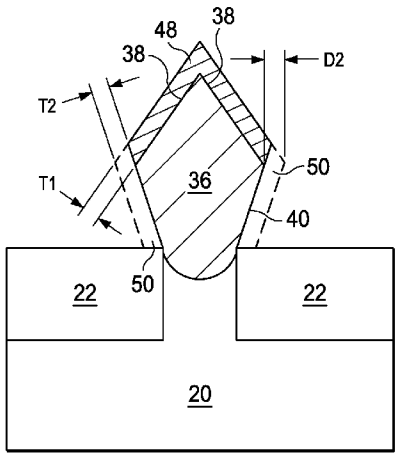

TSMC EXHIBIT 1061

U.S. PATENT DOCUMENTS

7,569,489	B2 *	8/2009	Dyer et al.	438/735
7,605,449	B2	10/2009	Liu et al.	
7,622,773	B2 *	11/2009	Irisawa et al.	257/347
7,723,193	B2 *	5/2010	Rhee et al.	438/283
7,750,338	B2	7/2010	Wang	
7,772,640	B2 *	8/2010	Miyano	257/328
7,915,693	B2 *	3/2011	Okano	257/401
8,110,458	B2 *	2/2012	Jin et al.	438/197
2005/0153490	A1	7/2005	Yoon et al.	
2007/0075372	A1 *	4/2007	Terashima et al.	257/360
2007/0120156	A1	5/2007	Liu et al.	
2007/0122953	A1	5/2007	Liu et al.	
2007/0122954	A1	5/2007	Liu et al.	
2007/0128782	A1	6/2007	Liu et al.	
2007/0132053	A1	6/2007	King et al.	
2007/0241399	A1 *	10/2007	Irisawa et al.	257/347
2007/0257296	A1 *	11/2007	Miyano	257/311
2008/0290470	A1	11/2008	King et al.	
2008/0296632	A1	12/2008	Moroz et al.	
2009/0181477	A1	7/2009	King et al.	
2010/0207209	A1 *	8/2010	Inokuma	257/347
2011/0147812	A1 *	6/2011	Steigerwald et al.	257/288
2011/0147828	A1 *	6/2011	Murthy et al.	257/327
2011/0147842	A1 *	6/2011	Cappellani et al.	257/365
2011/0254090	A1 *	10/2011	Cheng et al.	257/347
2011/0272763	A1 *	11/2011	Sasaki et al.	257/347

* cited by examiner

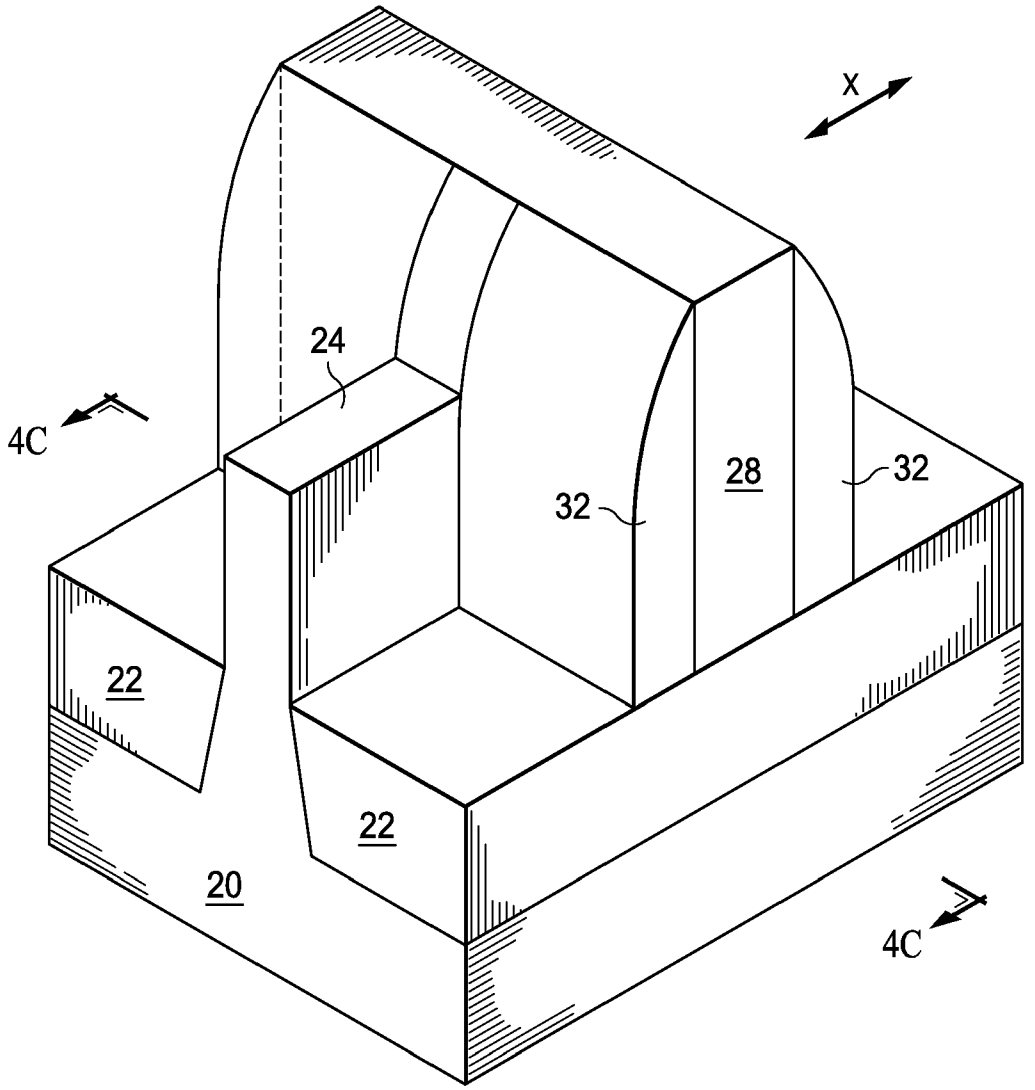

FIG. 1

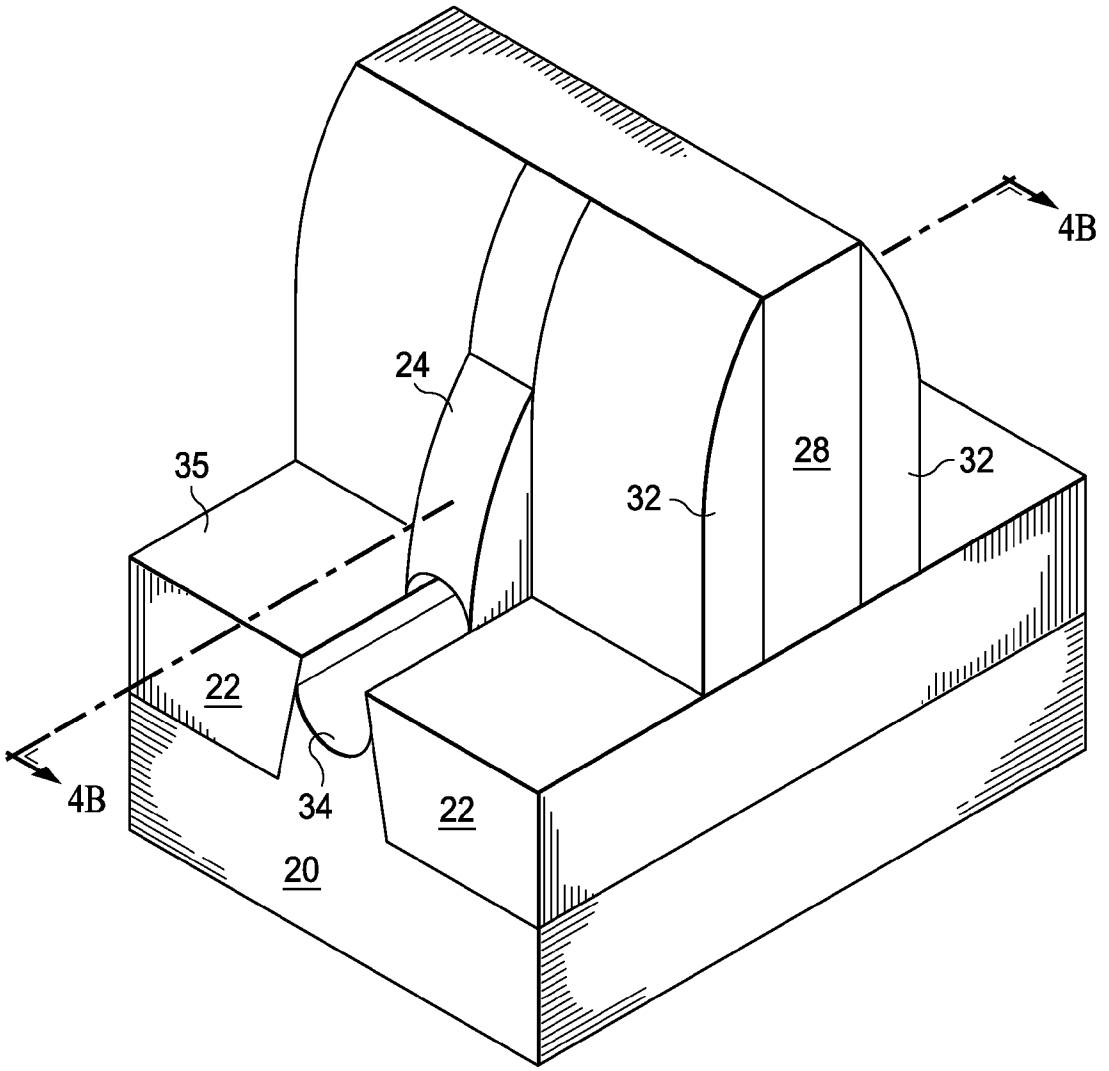

FIG. 2A

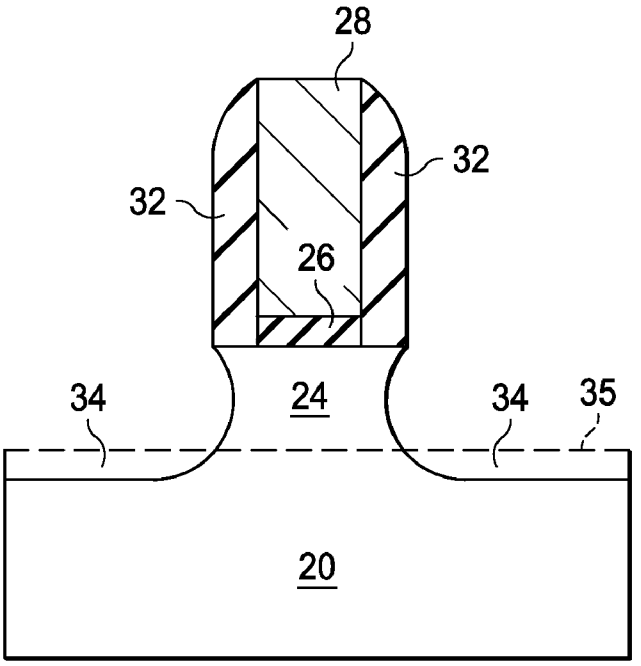

FIG. 2B

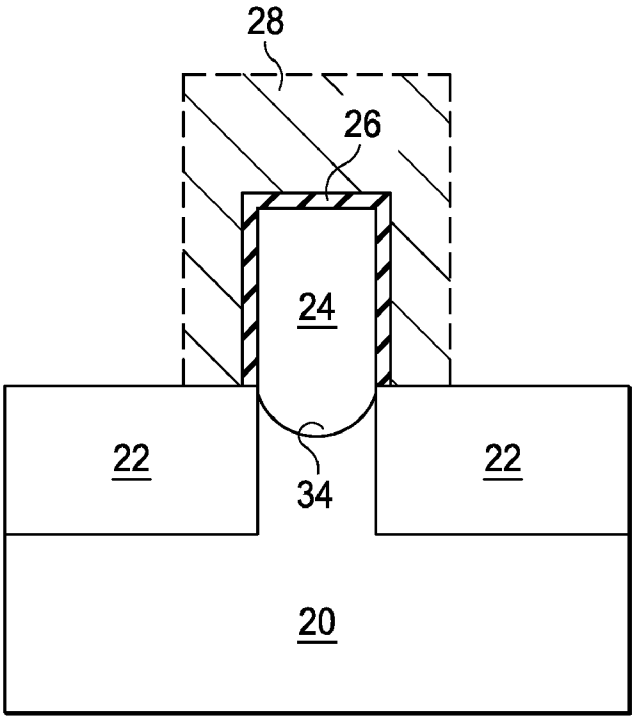

FIG. 2C

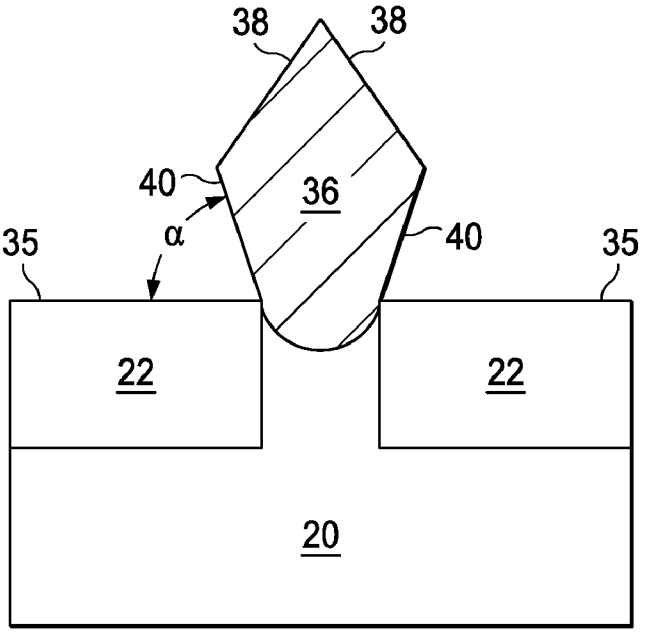

FIG. 3

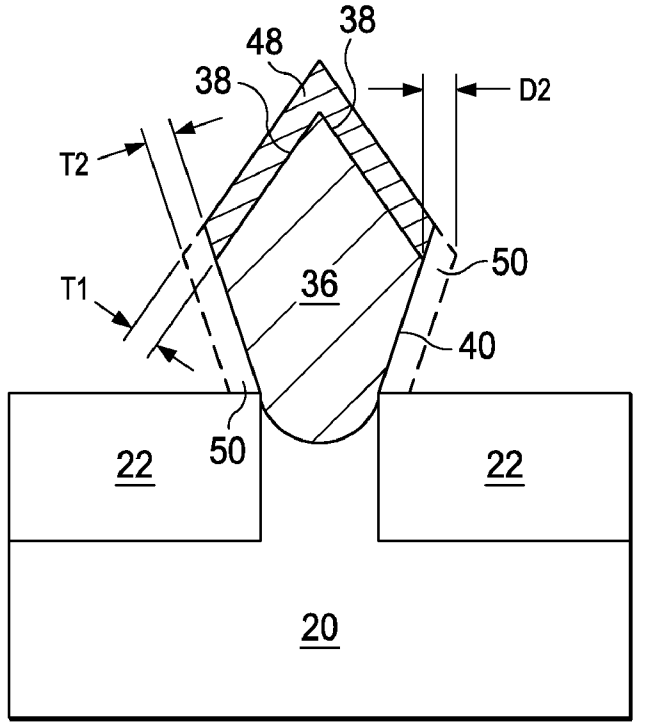

FIG. 4

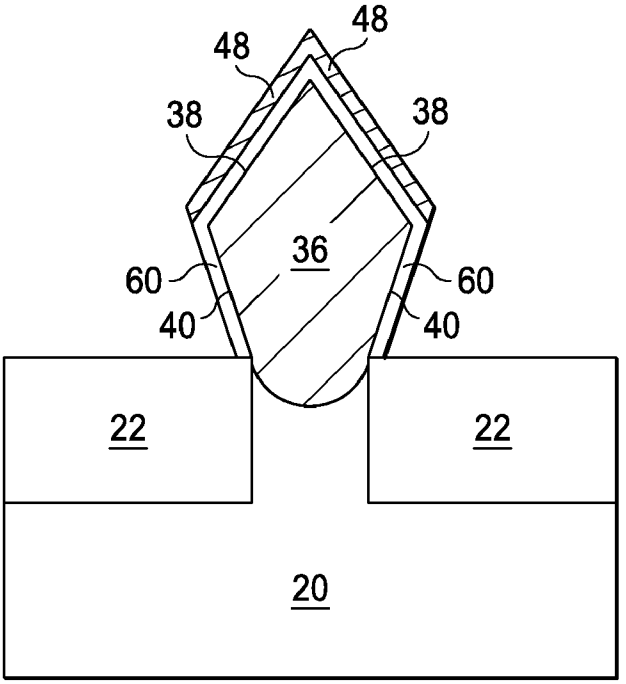

FIG. 5

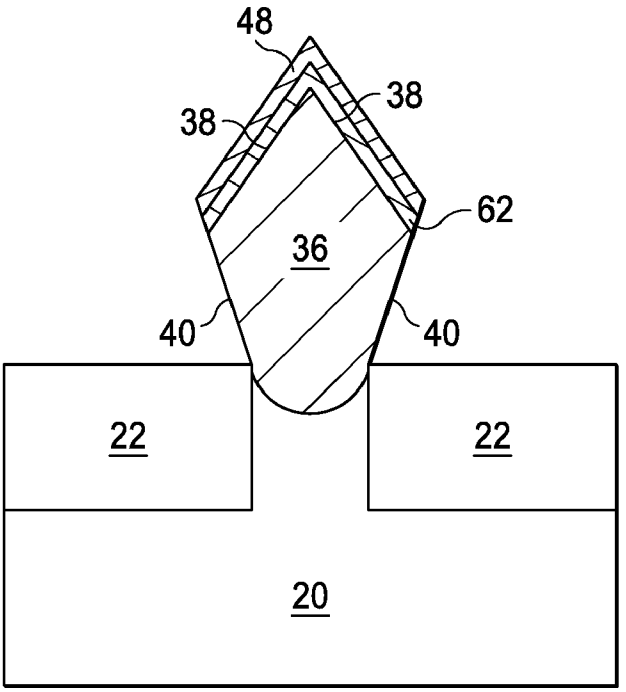

FIG. 6

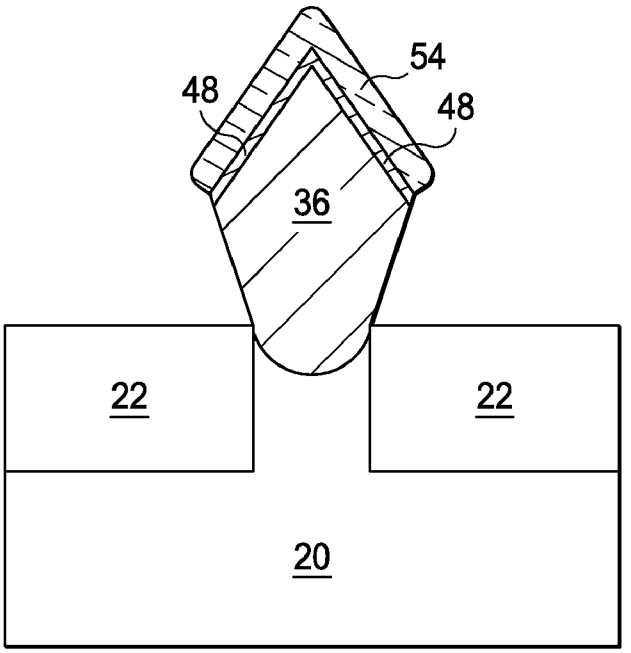

FIG. 7

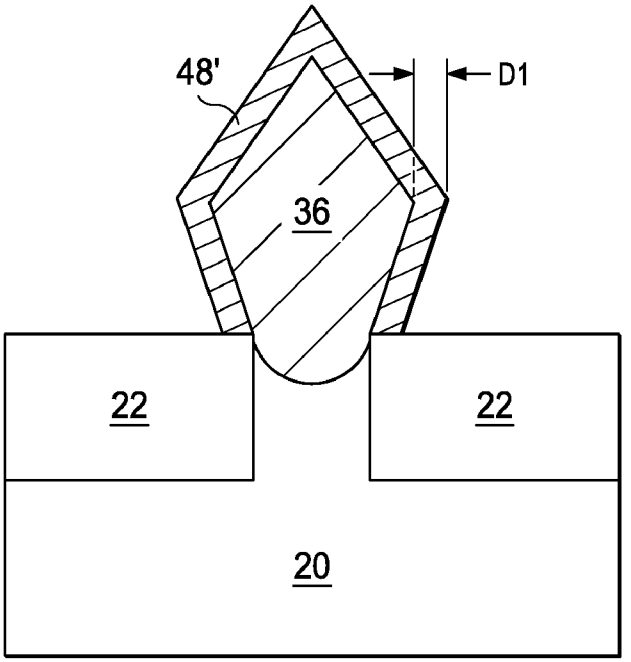

FIG. 8

CONTROLLING THE SHAPE OF SOURCE/DRAIN REGIONS IN FINFETS

This application claims the benefit of U.S. Provisional Application No. 61/246,883 filed on Sep. 29, 2009, entitled "Controlling the Shape of Source/Drain Regions in FinFETs," which application is hereby incorporated herein by reference.

TECHNICAL FIELD

This disclosure relates generally to semiconductor devices, and more particularly to structures and formation methods of fin field-effect transistors (FinFETs).

BACKGROUND

With the increasing down scaling of integrated circuits and increasingly higher requirements for integrated circuits, transistors need to have higher drive currents with increasingly smaller dimensions. Fin field-effect transistors (FinFETs) were thus developed.

As is known in the art, the drive currents of MOS transistors may benefit from the stresses in the channel regions of the MOS transistors. Therefore, the source and drain regions of the FinFET may be formed by removing portions of the respective fin not covered by the gate electrode, and re-growing SiGe or SiC in the spaces left by the removed fin. The re-grown SiGe or SiC are used to form source and drain regions. The re-grown source and drain regions may also have the benefit of reducing the source/drain resistance if the re-grown source/drain regions are in-situ doped with impurities in the re-growth process.

The re-growth of the source/drain regions, however, suffers from drawbacks. In contrast to conventional planar devices, the re-growth of the source/drain regions is not confined by shallow trench isolation regions, and hence the width of the re-grown SiGe is not limited. Since SiGe has a growth rate smaller on (111) planes than on other planes, the re-grown source/drain regions may not have a rectangular shape as that of the original fin. Instead, the re-grown SiGe regions may extend laterally and form facets. This may cause the reduction in the distance between a re-grown SiGe region and a re-grown SiGe region of a neighboring FinFET. Accordingly, the merging window, in which the neighboring re-growing source/drain regions will not merge, is reduced.

SUMMARY

In accordance with one aspect of the embodiment, an integrated circuit structure includes a fin field-effect transistor (FinFET) including a semiconductor fin over and adjacent insulation regions; and a source/drain region over the insulation regions. The source/drain region includes a first and a second semiconductor region. The first semiconductor region includes silicon and an element selected from the group consisting of germanium and carbon, wherein the element has a first atomic percentage in the first semiconductor region. The first semiconductor region has an up-slant facet and a down-slant facet. The second semiconductor region includes silicon and the element. The element has a second atomic percentage lower than the first atomic percentage. The second semiconductor region has a first portion on the up-slant facet and has a first thickness. A second portion of the second semiconductor region, if any, on the down-slant facet has a second thickness smaller than the first thickness.

Other embodiments are also disclosed.

BRIEF DESCRIPTION OF THE DRAWINGS

For a more complete understanding of the embodiments, and the advantages thereof, reference is now made to the following descriptions taken in conjunction with the accompanying drawings, in which:

FIGS. **1** through **7** are perspective views and cross-sectional views of intermediate stages in the manufacturing of a FinFET in accordance with an embodiment; and

FIG. **8** illustrates an integrated circuit structure with caps formed on re-grown source/drain regions, wherein the caps are also formed on down-slant facets of the re-grown source/drain regions.

DETAILED DESCRIPTION OF ILLUSTRATIVE EMBODIMENTS

The making and using of the embodiments are discussed in detail below. It should be appreciated, however, that the embodiments provide many applicable inventive concepts that can be embodied in a wide variety of specific contexts.

A novel fin field-effect transistor (FinFET) embodiment and the method of forming the same are presented. The intermediate stages of manufacturing the embodiment are illustrated. The variations of the embodiment are discussed. Throughout the various views and illustrative embodiments, like reference numbers are used to designate like elements.

Referring to FIG. **1**, an integrated circuit structure is formed. The integrated circuit structure includes substrate **20**, which may be a bulk silicon substrate. Substrate **20** may be doped with a p-type or an n-type impurity. Isolation regions such as shallow trench isolation (STI) regions **22** may be formed in substrate **20**. Fin **24** is formed over top surfaces of STI regions **22**. Fin **24** may be formed by removing top portions of STI regions **22**, so that a portion of substrate **20** between neighboring STI regions **22** becomes a fin. Alternatively, fin **24** may be formed on top of substrate **20** by an epitaxial growth.

In an embodiment, substrate **20** has a surface orientation of (100), and fin **24** extends along the <110> direction (X-direction as shown in FIG. **1**). In other embodiments, substrate **20** may have other surface orientations such as (110), in which case fin **24** may extend in directions such as <100>. Gate dielectric **26** (not shown in FIG. **1**, please refer to FIGS. **2**B and **2**C), which may be formed of silicon oxide, high-k dielectric materials, or the like, is formed on the top surface and sidewalls of fin **24**. Gate electrode **28** is formed on gate dielectric **26**. Gate spacers **32** are formed on the sidewalls of gate electrode **28**.

Referring to FIG. **2**A, the exposed portions of fin **24** not covered by gate dielectric **26**, gate electrode **28**, and gate spacers **32** are removed (recessed), while the covered portion of fin **24** is not removed. The removal may be performed by a dry etch. FIG. **2**B illustrates a cross-sectional view of the structure shown in FIG. **2**A, wherein the cross-sectional view is obtained in a vertical plane crossing line **4**B-**4**B in FIG. **2**A. The spaces left by the removed portions of fin **24** are referred to as recesses **34** hereinafter. Recesses **34** may have a bottom level with top surface **35** of STI regions **22**. Alternatively, the bottom of recesses **34** may be lower than top surface **35** of STI regions **22**, as illustrated in FIGS. **2**A and **2**B.

In a subsequent discussion, cross-sectional views are used to explain the concept of the embodiments. Unless specified otherwise, the cross-sectional views are obtained in vertical planes (referred to as source/drain planes hereinafter) crossing lines at the same position as line **4**C-**4**C in FIG. **1**. It is noted that line **4**C-**4**C crosses the (would-be) source/drain

region, but not gate electrode **28**. FIG. **2**C illustrates the cross-sectional view of the structure shown in FIG. **2**A, wherein the cross-sectional view is obtained in the source/drain plane. Further, gate dielectric **26** and gate electrode **28** are also illustrated. Since gate dielectric **26** and gate electrode **28** are not in the source/drain plane, they are illustrated using dotted lines.

Next, as shown in FIG. **3**, SiGe region **36**, which may also be referred to as a source/drain stressor **36**, is epitaxially grown in recesses **34** by selective epitaxial growth (SEG). SiGe region **36** has a lattice constant greater than the lattice constant of substrate **20**. In an exemplary embodiment, SiGe region **36** is formed using chemical vapor deposition (CVD). The precursors may include Si-containing gases and Ge-containing gases, such as SiH_4 and GeH_4, respectively, and the partial pressures of the Si-containing gases and Ge-containing gases are adjusted to modify the atomic ratio of germanium to silicon. In an embodiment, the resulting SiGe region **36** includes greater than about 20 atomic percent germanium. The germanium percentage in SiGe region **36** may also be between about 20 percent and about 40 atomic percent.

During the epitaxial process for forming SiGe region **36**, p-type impurities such as boron may be doped with the proceeding of the epitaxy. The impurity concentration may be between about $1\times10^{19}/cm^3$ and about $1\times10^{21}/cm^3$. In alternative embodiments, no p-type and n-type impurities are doped, while the doping of source and drain regions are performed in an implantation step performed after the formation of SiGe region **36**.

It is observed that due to different growth rates on different surface planes, facets may be formed. For example, the growth rate on surfaces having (111) surface orientations is lower than that of other planes such as (110) and (100) planes. Accordingly, facets **38** and **40**, which have the (111) surface orientations (in other word, on (111) planes), have the lowest growth rate, while other planes have higher growth rates. In the beginning of the epitaxial growth of SiGe region **36**, facets **38** and **40** may not be formed. However, with the proceeding of the epitaxial growth, due to the difference in growth rates, facets **38** and **40** are gradually formed. Throughout the description, facets **38**, which face away from substrate **20**, are referred to as up-slant facets, while facets **40**, which face toward substrate **20**, are referred to as down-slant facets. Down-slant facets **40** and the respective top surfaces **35** of STI regions **22** may have an angle α, which may be about 54.7 degrees. In an embodiment, SiGe region **36** is grown until the portion of the recess below top surfaces **35** of STI regions **22** is fully filled and facets **38** and **40** are substantially fully developed, although SiGe region **36** may be grown further.

Referring to FIG. **4**, process conditions for the epitaxial process are changed to form SiGe region **48** on SiGe region **36**, wherein less germanium is introduced than in the formation of SiGe region **36**. The formation of SiGe region **48** may be performed in-situ with the formation of SiGe region **36**, which means that SiGe region **36** and **48** are formed in a same process chamber with no vacuum break occurring therebetween. In an exemplary embodiment, the partial pressures, hence flow rates of the Ge-containing gases such as GeH_4 are reduced to reduce the germanium concentration in SiGe region **48**. The resulting SiGe region **48** has a lower germanium atomic percentage than SiGe region **36**. In an exemplary embodiment, the atomic percentage of germanium in SiGe region **48** and the atomic percentage of germanium in SiGe region **36** have a difference greater than about 5 atomic percent. For example, if the germanium atomic percentage in SiGe region **36** is 20 percent, the germanium atomic percentage in SiGe region **48** is lower than about 15 percent. The atomic percentages of germanium in SiGe region **48** may also be less than about 15 percent, or less than about 10 percent.

It is observed that SiGe has a higher selectivity than silicon for being formed on oxide, which means that if SiGe and silicon are both formed on an oxide, the SiGe will have a lower growth rate than silicon. For SiGe, the selectivity is the growth rate of SiGe on SiGe to the growth rate of SiGe on the oxide. For Si, the selectivity is the growth rate of silicon on SiGe (or silicon) to the growth rate of silicon on the oxide. In an embodiment, the formation process conditions are tuned to further increase the selectivity, so that SiGe region **48** is not formed on STI regions **22**, and as a result, not formed on down-slant facets **40**. For example, HCl gas may be added (as an etching gas) into the process gas for forming SiGe region **48**, with the flow rate of the HCl gas being adjusted. Accordingly, any possible SiGe formed on STI regions **22** is etched since it has a higher etching rate than SiGe formed on SiGe region **36**. It is noted that if the process conditions are not tuned, a profile as shown in FIG. **8** may be formed, which is undesirable since the merging window will be undesirably reduced. As a result of the optimized process conditions, SiGe region **48** has a profile as shown in FIG. **4**, wherein SiGe region **48** is grown on up-slant facets **38**, but not on down-slant facets **40**. Alternatively, as shown as regions **50** marked using dotted lines, SiGe region **48** is also grown on down-slant facets **40**, but with a much smaller thickness than that of the portions on up-slant facets **38**. In an exemplary embodiment, thickness T**2** is less than about 20 percent of thickness T**1**, wherein thickness T**1** is the thickness of portions **50** of SiGe region **48** on up-slant facets **38**, while thickness T**2** is the thickness of the portions of SiGe region **48** on down-slant facets **40**. The selectivity of SiGe may be further increased by selecting appropriate materials for STI regions.

FIGS. **5** and **6** illustrate alternative embodiments. In FIG. **5**, silicon interlayer **60** is inserted between SiGe regions **36** and **48**. It is realized that silicon has a low selectivity, and hence may be formed on STI regions **22**. As a result, silicon interlayer **60** is also formed on down-slant facets **40**. However, SiGe region **48** will only be formed on the up-slant facets, but not on down-slant facets, of silicon interlayer **60**.

In alternative embodiments as shown in FIG. **6**, SiGe interlayer **62** is inserted between SiGe regions **36** and **48**. SiGe interlayer **62** may have a germanium atomic percentage between the germanium atomic percentages of SiGe regions **36** and **48**. Again, process conditions may be tuned for the formation of SiGe interlayer **62**, so that SiGe interlayer **62** is formed only on the up-slant facets **38**, but not on the down-slant facets **40**, of SiGe region **36**, and SiGe region **48** will only be formed on the up-slant facets, but not on the down-slant facets, of SiGe interlayer **62**.

FIG. **7** illustrates the formation of germano-silicide regions **54**. Throughout the description, germano-silicide regions **54** are also referred to as silicide regions **54**. As is known in the art, germano-silicide regions **54** may be formed by blanket depositing a thin layer of metal (not shown), such as nickel, platinum, palladium, vanadium, titanium, cobalt, tantalum, ytterbium, zirconium, and combinations thereof. The substrate is then heated, which causes silicon and germanium to react with the metal where contacted. After the reaction, a layer of metal germano-silicide **54** is formed between SiGe and metal. The un-reacted metal is selectively removed through the use of an etchant that attacks metal but does not attack the germano-silicide. In an embodiment, the volume of SiGe region **36** is designed to be as large as possible, so as to provide a maximum stress to the channel region of the resulting FinFET device. Accordingly, to maintain an acceptable

merging window (which is the distance between neighboring re-grown source/drain regions), SiGe region **48** may be thin. However, since the quality of germano-silicide becomes worse if the germanium atomic percentage is high, the thickness T**1** (FIG. **4**) of SiGe region **48** may be set close to the thickness that will be consumed by the silicidation process. In the resulting structure, germano-silicide region **54** may contact SiGe region **36**. In alternative embodiments, SiGe region **48** may be thicker than what is needed for the silicidation. Accordingly, after the silicidation, a thin layer of SiGe region **48** may be left.

In an embodiment, germano-silicide region **54** is formed over up-slant facets **38**, but not extending into down-slant facets **40**. It is noted that in germano-silicide regions **54**, the atomic percentage of germanium to germanium and silicon will still be the same as the atomic percentage of germanium to germanium and silicon in SiGe region **48**, since the newly added metal atoms are not counted. The atomic percentage of germanium to germanium and silicon may be expressed as (number of germanium atoms/(number of germanium atoms+number of silicon atoms).

Although in the above-discussed embodiments, regions **36**, **48**, and **62** are described as SiGe regions, and the respective transistor is a p-type FinFET, in alternative embodiments, regions **36**, **48**, and **62** may be SiC regions, while the respective FinFET is an n-type FinFET. It is noted that SiC typically has a much smaller carbon atomic percentage than the germanium atomic percentage in SiGe region. However, the relative atomic carbon percentages in regions **36**, **48**, and **62** may be realized by one skilled in the art by applying the teaching of the embodiments.

The embodiments have several advantageous features. Comparing the profile as shown in FIGS. **4** and **8**, it is noted that by forming SiGe region **48** on up-slant facets **38**, but not on down-slant facets **40**, the lateral growth may be reduced. For example, if SiGe regions **36** and **48** are grown to a same thickness, SiGe region **48'** in FIG. **8** may have a lateral extension distance D**1** of 113 Å, while the SiGe region **48** in FIG. **4** only have a lateral extension distance D**2** equal to 50 percent of lateral extension distance D**1**, or 56.5 Å. Accordingly, the merging window in FIG. **4** is increased over the merging window in FIG. **8**.

Although the embodiments and their advantages have been described in detail, it should be understood that various changes, substitutions and alterations can be made herein without departing from the spirit and scope of the disclosure as defined by the appended claims. Moreover, the scope of the present application is not intended to be limited to the particular embodiments of the process, machine, manufacture, and composition of matter, means, methods and steps described in the specification. As one of ordinary skill in the art will readily appreciate from the disclosure, processes, machines, manufacture, compositions of matter, means, methods, or steps, presently existing or later to be developed, that perform substantially the same function or achieve substantially the same result as the corresponding embodiments described herein may be utilized according to the disclosure. Accordingly, the appended claims are intended to include within their scope such processes, machines, manufacture, compositions of matter, means, methods, or steps. In addition, each claim constitutes a separate embodiment, and the combination of various claims and embodiments are within the scope of the invention.

What is claimed is:

1. An integrated circuit structure comprising:
insulation regions comprising top surfaces; and
a fin field-effect transistor (FinFET) comprising:
a semiconductor fin over and adjacent to the insulation regions;
a gate dielectric on a top surface, and extending on sidewalls, of the semiconductor fin;
a gate electrode on the gate dielectric; and
a source/drain region over the insulation regions and adjoining the semiconductor fin, wherein the source/drain region comprises:
a first semiconductor region comprising silicon and an element selected from the group consisting of germanium and carbon, wherein the element has a first atomic percentage in the first semiconductor region, and wherein the first semiconductor region comprises an up-slant facet and a down-slant facet; and
a second semiconductor region comprising silicon and the element, wherein the element has a second atomic percentage in the second semiconductor region with the second atomic percentage being lower than the first atomic percentage, wherein the second semiconductor region comprises a first portion on the up-slant facet and has a first thickness, and wherein a second portion of the second semiconductor region on the down-slant facet has a second thickness smaller than the first thickness.

2. The integrated circuit structure of claim **1**, wherein the second atomic percentage is lower than the first atomic percentage by greater than about five percent.

3. The integrated circuit structure of claim **1**, wherein the second thickness is less than 20 percent of the first thickness.

4. The integrated circuit structure of claim **1**, wherein there is substantially no second portion of the second semiconductor region on the down-slant facet.

5. The integrated circuit structure of claim **1**, wherein the up-slant facet and the down-slant facet are on (111) planes.

6. The integrated circuit structure of claim **1** further comprising a silicon interlayer between the first portion of the second semiconductor region and the up-slant facet, and wherein the silicon interlayer extends onto the down-slant facet and contacts the insulation regions.

7. The integrated circuit structure of claim **1** further comprising a SiGe interlayer between the first portion of the second semiconductor region and the up-slant facet, and wherein the SiGe interlayer does not extend onto the down-slant facet.

8. The integrated circuit structure of claim **1**, wherein the down-slant facet and the top surfaces of the insulation regions form an angle equal to about 54.7 degrees.

9. An integrated circuit structure comprising:
a silicon substrate;
two shallow trench isolation (STI) regions in the silicon substrate and facing each other, with a portion of the silicon substrate therebetween;
a silicon fin over, and horizontally between, the two STI regions;
a gate dielectric on a top surface, and extending on sidewalls, of the silicon fin;
a gate electrode on the gate dielectric; and
a source/drain stressor comprising at least a portion over and horizontally between the two STI regions, wherein the source/drain stressor contacts the silicon fin and comprises:
a first SiGe region having a first germanium atomic percentage, wherein the first SiGe region comprises an up-slant facet on a (111) plane, and a down-slant facet on an additional (111) plane; and

a second SiGe region with a second germanium atomic percentage lower than the first germanium atomic percentage, wherein the second SiGe region comprises a portion on the up-slant facet, and wherein substantially no portion of the second SiGe region extends on the down-slant facet.

10. The integrated circuit structure of claim **9**, wherein the second germanium atomic percentage is lower than the first germanium atomic percentage by greater than about five percent.

11. The integrated circuit structure of claim **9** further comprising a silicon interlayer between the second SiGe region and the up-slant facet, and wherein the silicon interlayer extends onto the down-slant facet and contacts one of the two STI regions.

12. The integrated circuit structure of claim **9** further comprising a SiGe interlayer between the second SiGe region and the up-slant facet, and wherein the SiGe interlayer does not extends onto the down-slant facet.

13. The integrated circuit structure of claim **9**, wherein the down-slant facet and top surfaces of the two STI regions form an angle equal to about 54.7 degrees.

14. An integrated circuit structure comprising:

a silicon substrate;

two shallow trench isolation (STI) regions in the silicon substrate and facing each other, with a portion of the silicon substrate therebetween;

a silicon fin over, and horizontally between, the two STI regions;

a gate dielectric on a top surface, and extending on sidewalls, of the silicon fin;

a gate electrode on the gate dielectric; and

a source/drain stressor comprising at least a portion over and horizontally between the two STI regions, wherein the source/drain stressor contacts the silicon fin and comprises:

a first SiGe region having a first germanium atomic percentage of germanium to silicon and germanium, wherein the first SiGe region has an up-slant facet on a (111) plane, and a down-slant facet on an additional (111) plane; and

a first germano-silicide with a second germanium atomic percentage of germanium to silicon and germanium, wherein the second germanium atomic percentage is lower than the first germanium atomic percentage, and wherein the first germano-silicide is on the up-slant facet.

15. The integrated circuit structure of claim **14**, wherein the second germanium atomic percentage is lower than the first germanium atomic percentage by greater than about five percent.

16. The integrated circuit structure of claim **14**, wherein the first germanium atomic percentage is greater than about 20 percent, and the second germanium atomic percent is lower than about 10 percent.

17. The integrated circuit structure of claim **14** further comprising an additional SiGe region between the first germano-silicide and the up-slant facet, wherein the additional SiGe region and the first germano-silicide have a same germanium atomic percentage of germanium to germanium and silicon.

18. The integrated circuit structure of claim **14**, wherein the down-slant facet and top surfaces of the two STI regions form an angle equal to about 54.7 degrees.

* * * * *