UNITED STATES PATENT AND TRADEMARK OFFICE

BEFORE THE PATENT TRIAL AND APPEAL BOARD

PORSCHE CARS NORTH AMERICA, INC.,
Petitioner

v.

YECHEZKAL EVAN SPERO,
Patent Owner

Case IPR2023-01122
U.S. Patent No. 11,208,029 B2

DECLARATION OF SCOTT ANDREWS, IN SUPPORT OF PETITION FOR *INTER PARTES* REVIEW OF U.S. PATENT NO. 11,208,029

Mail Stop "PATENT BOARD"
Patent Trial and Appeal Board
U.S. Patent & Trademark Office
P.O. Box 1450
Alexandria, VA 22313-1450

TABLE OF CONTENTS

I. INTRODUCTION 1

II. SUMMARY OF GROUNDS 2

III. SUMMARY OF OPINIONS 3

IV. QUALIFICATIONS 3

V. MATERIALS CONSIDERED 10

VI. LEGAL STANDARDS 12

- A. My Understanding of Claim Construction 13
- B. A Person of Ordinary Skill in the Art 13
- C. My Understanding of Obviousness 14

VII. LEVEL OF ORDINARY SKILL IN THE ART 19

VIII. OVERVIEW OF THE ’029 PATENT CLAIMS 20

- A. Technology Overview of the Patent Claims 20
- B. Independent claims 1, 12, and 23 33
- C. Dependent claims 37
- D. Prosecution History Summary 48
- E. Claim Construction 49

IX. SUMMARY OF THE APPLIED REFERENCES 50

- A. U.S. Patent No. 6,144,158 to Beam 50
- B. U.S. Patent No. 6,049,749 to Kobayashi 54
- C. U.S. Patent No. 5,588,733 to Gotou 58
- D. WO 1998/054030 to Karlsson 62

X. GROUND 1: THE COMBINATION OF BEAM AND KOBAYASHI RENDERS OBVIOUS CLAIMS 1-33 65

- A. Independent claims 1, 12, and 23 65
  - 1. A POSA would have been motivated to combine Beam and Kobayashi with a reasonable expectation of success 68
  - 2. [1.P]: “A system, for a motor vehicle, comprising:” 79
  - [12.P]: “A non-transitory computer-readable storage medium, storing instructions that, when executed by one or more

processors of a motor vehicle that includes a plurality of headlamps that each comprise a plurality of LED light sources, enable the one or more processors to:” 79

[23.P]: “A computer-implemented method for adapting light from headlamps of a motor vehicle to accommodate road shape changes, the headlamps including a plurality of LED light sources, comprising:” 79

3. [1.1]: “a plurality of headlamps, each comprising a plurality of LED light sources;” 81

See [12.P]: (“a plurality of headlamps that each comprising a plurality of LED light sources,”) 81

See [23.P]: (“the headlamps including a plurality of LED light sources,”) 81

4. [1.2]: “one or more processors; and” 82

See [12.P]: (“one or more processors”) 82

See [23.P]: (“computer-implemented method”) 82

5. [1.3]: “a memory storing instructions that, when executed by one or more of the one or more processors, enable the one or more processors to:” 84

See [12.P]: (“storing instructions that, when executed by one or more processors”) 84

See [23.P]: (“A computer-implemented method”) 84

6. [1.4]: “receive first data, including at least map data, indicating a road curvature upcoming along a road on which the motor vehicle is traveling;” 86

[12.4]: “receive first data, including at least map data, indicating a road curvature upcoming along a road on which the motor vehicle is traveling;” 86

[23.4]: “determining an upcoming shape change of a road, ahead of the motor vehicle, based on first data, including map data, indicating the shape change;” 86

7. [1.5]: “determine a light change, the change adapting a light pattern of the headlamps in at least one of color, intensity or spatial distribution to increase light in a direction of the road

curvature ahead of the motor vehicle and shaping light based at least in part on the road curvature; and" 91

[12.5]: "determine a light change, the change adapting a light pattern of the headlamps in at least one of color, intensity or spatial distribution to increase light in a direction of the road curvature ahead of the motor vehicle and shaping light based at least in part on the road curvature; and" 91

[23.5]: "determining a light output, the output adapting a light pattern of the headlamps in at least one of color, intensity or spatial distribution to increase light in a direction associated with the shape change ahead of the motor vehicle and shaping light based on the shape change; and".....91

8. [1.6]: "control at least a first plurality of the LED light sources to provide light based at least in part on the determined light change and prior to the motor vehicle reaching the road curvature." 95

[12.6]: "control at least a first plurality of the LED light sources to provide light based at least in part on the determined light change and prior to the motor vehicle reaching the road curvature." 95

[23.6]: "prior to reaching the road shape change, causing at least a first plurality of the LED light sources to provide light based at least in part on the determined light output.".....95

B. Dependent claims 97

1. [2]: "wherein the determination of the light change includes selection of the first plurality of the LED light sources.".....98

[13]: "wherein the determination of the light change includes selection of the first plurality of the LED light sources.".....98

[24]: "wherein the determining the light includes selecting the first plurality of the LED light sources." 98

2. [3]: "wherein the instructions include instructions that, when executed by the one or more processors, enable the one or more processors to reshape light based on the road curvature as the motor vehicle travels at least to or through the road curvature." 100

[14]: "wherein the instructions include instructions that, when executed by the one or more processors, enable the one or more processors to reshape light based on the road curvature as the motor vehicle travels at least to or through the road curvature." 100

[25]: "reshaping light based on the shape change as the motor vehicle travels at least to or through the shape change." 100

3. [4]: "wherein the reshaping of light further includes control to at least one of the first plurality of LED light sources, or a second plurality of LED light sources, including at least one LED light source different from the LED light sources of the first plurality of LED light sources, to provide reshaped light." 103

[15]: "wherein the reshaping of light further includes control to at least one of the first plurality of LED light sources, or a second plurality of LED light sources, including at least one LED light source different from the LED light sources of the first plurality of LED light sources, to provide reshaped light." 103

[26]: "wherein the reshaping light further includes controlling at least one of the first plurality of LED light sources, or a second plurality of LED light sources, including at least one LED light source different from the LED light sources of the first plurality of LED light sources, to provide reshaped light." 103

4. [5]: "wherein the increase of light in the direction of the road curvature includes at least an increase of light emitted at a level below high-beam light and directed in the direction of the road curvature." 106

[16]: "wherein the increase of light in the direction of the road curvature includes at least an increase of light emitted at a level below high-beam light and directed in the direction of the road curvature." 106

[27]: "wherein the increase of light in the direction associated with the shape change includes at least light output that increases light emitted at a level below high-beam light and directed in the direction associated with shape change." 106

5. [6.1]: "wherein the instructions include instructions that, when executed by the one or more processors, enable the one or more processors to:" 110

[17.1]: "wherein the instructions include instructions that, when executed by the one or more processors, enable the one or more processors to:" 110

[28.1]: (no corresponding element due to claim 23 not positively reciting "processors") 110

[6.2]: "determine a second light change, the second change adapting the light pattern of the headlamps in at least one of color, intensity or spatial distribution to increase light in a direction of a second road curvature ahead of the motor vehicle, determined based on at least one of the first data or second data including at least second map data, and the second change shaping light based at least in part on the second road curvature; and" 110

[17.2]: "determine a second light change, the second change adapting the light pattern of the headlamps in at least one of color, intensity or spatial distribution to increase light in a direction of a second road curvature ahead of the motor vehicle, determined based on at least one of the first data or second data including at least second map data, and the second change shaping light based at least in part on the second road curvature; and" 110

[28.2]: "determining a second light output, the second output adapting the light pattern of the headlamps in at least one of color, intensity or spatial distribution to increase light in a direction associated with a second shape change ahead of the motor vehicle, determined based on at least one of the first data or second data including at least second map data, and the second output shaping light based at least in part on the second shape change; and" 110

[6.3]: "control at least a second plurality of the LED light sources, having at least one LED light source different from the first plurality of LED light sources, to provide light based at least in part on the determined second light change and prior to the motor vehicle reaching the second road curvature." 111

[17.3]: "control at least a second plurality of the LED light sources, having at least one LED light source different from the first plurality of LED light sources, to provide light based at least in part on the determined second light change and prior to the motor vehicle reaching the second road curvature." 111

[28.3]: "controlling at least a second plurality of the LED light sources, having at least one LED light source different from the first plurality of LED light sources, to provide light based at least in part on the determined second output and prior to the motor vehicle reaching the second shape change." 111

6. [7.1]: "wherein the increase of light in the direction of the road curvature includes at least one of expansion of the light pattern in the direction of the road curvature or an increase to intensity of light directed in the direction of the road curvature; and" 117

[18.1]: "wherein the increase of light in the direction of the road curvature includes at least one of expansion of the light pattern in the direction of the road curvature or an increase to intensity of light directed in the direction of the road curvature; and" 117

[29.1]: "wherein the increase of light in the direction associated with the shape change includes at least one of expansion of the light pattern in the direction associated with the shape change or an increase to intensity of light directed in the direction associated with the shape change; and" 117

[7.2]: "wherein the determination of the light change includes determination of light changes to individual LEDs of the first plurality of LED light sources, at least one of the changes including at least one of:" 117

[18.2]: "wherein the determination of the light change includes determination of light changes to individual LEDs of the first plurality of LED light sources, at least one of the changes including at least one of:" 117

[29.2]: "wherein the determining the light output includes determining output for individual LEDs of the first plurality of LED light sources, the output including providing light directed in the direction associated with the shape change

from an LED not providing light directed in the direction associated with the shape change prior to the change.”.....117

[7.3]: “a variation to at least one of intensity or color of individual LEDs of the first plurality of LED light sources, or”.....117

[18.3]: “a variation to at least one of intensity or color of individual LEDs of the first plurality of LED light sources, or”.....118

See [29.2] (no corresponding element in claim 29, no mentioning intensity or color of individual LEDs).....118

[7.4]: “providing light directed in the direction of the road curvature from an LED not providing light directed in the direction of the road curvature prior to the change.”.....118

[18.4]: “providing light directed in the direction of the road curvature from an LED not providing light directed in the direction of the road curvature prior to the change.”.....118

See [29.2] (“providing light directed in the direction associated with the shape change from an LED not providing light directed in the direction associated with the shape change prior to the change.”) 118

7. [8.1]: “further comprising one or more cameras positioned to capture data indicating at least one other vehicle ahead of the motor vehicle;”.....124

See [19.2] (“captured by at least one camera of the motor vehicle”) 124

See [30.2] (“captured by at least one camera of the motor vehicle”) 124

[8.2]: “wherein the instructions include instructions that, when executed by the one or more processors, enable the one or more processors to:”.....125

[19.1]: “wherein the instructions include instructions that, when executed by the one or more processors, enable the one or more processors to:” 125

[30.1]: (no corresponding element due to claim 23 not expressly reciting processor(s), in claim 23: a computer-implemented method) 125

[8.3]: “determine a position associated with the at least one other vehicle based at least in part on second data captured by at least one of the one or more cameras; and” 125

[19.2]: “determine a position associated with at least one other vehicle based at least in part on second data indicating the at least one other vehicle and captured by at least one camera of the motor vehicle; and” 125

[30.2]: “determining a position associated with at least one other vehicle based at least in part on second data indicating the at least one other vehicle and captured by at least one camera of the motor vehicle; and” 125

[8.4]: “control, based at least in part on the position, a second plurality of LED light sources providing light directed towards an area including at least a portion of the other vehicle to diminish glare to a driver of the other vehicle by a decrease to intensity of light directed towards and illuminating the area, the light that is directed towards and illuminating the area having lower intensity compared to light directed towards points laterally adjacent the area to either side.” 125

[19.3]: “control, based at least in part on the position, a second plurality of LED light sources providing light directed towards an area including at least a portion of the other vehicle to diminish glare to a driver of the other vehicle by a decrease to intensity of light directed towards and illuminating the area, the light that is directed towards and illuminating the area having lower intensity compared to light directed towards points laterally adjacent the area to either side.” 125

[30.3]: “controlling, based at least in part on the position, a second plurality of LED light sources providing light directed towards an area including at least a portion of the other vehicle to diminish glare to a driver of the other vehicle by decreasing intensity of light directed towards and illuminating the area, the light directed towards and illuminating the area having lower intensity compared to light directed towards points laterally adjacent the area to either side.” 126

8. [9.1]/[20.1]/[31.1]: "wherein:" 130

[9.2]/[20.2]/[31.2]: "the first plurality and second plurality of LED light sources include at least one common LED light source;" 130

[9.3]/[20.3]: "the control of the second plurality of LED light sources is based at least in part on third data received from a non-camera sensor of the motor vehicle;" 130

[31.3]: "the controlling the second plurality of LED light sources is based at least in part on third data received from a non-camera sensor of the motor vehicle;" 130

[9.4]/[20.4]/[31.4]: "the position includes at least one of: 130

a distance associated with the at least one other vehicle, ... 130

at least one elevation associated with the at least one other vehicle, or 130

a position within image data captured by at least one of the cameras;" 130

[9.5]/[20.5]/[31.5]: "the first data includes data from a non-camera sensor of the motor vehicle;" 130

[9.6]/[20.6]: "either one of the control of the first plurality of LED light sources or control of the second plurality of LED light sources is subsequent to and accommodative of the other;" 130

[31.6]: "either one of the determining the light output or controlling the second plurality of LED light sources is subsequent to and accommodative of the other;" 130

[9.7]/[20.7]: "the control of the second plurality of LED light sources additionally includes termination of light from at least one LED providing light directed to the area prior to the termination; and" 130

[31.7]: "the controlling the second plurality of LED light sources additionally includes terminating light from at least one LED providing light directed to the area prior to the terminating; and" 131

[9.8]/[20.8]/[31.8]: "the light pattern includes at least one of an illumination pattern or an emission pattern of the headlamps." 131

9. [10]: "further including one or more optical control elements for controlling light from one or more of the LED light sources." 137

[21]: "wherein the instructions include instructions that, when executed by the one or more processors, enable the one or more processors to utilize one or more optical control elements included in the motor vehicle to control light from at least the first plurality or second plurality of the LED light sources." 137

[32]: "utilizing one or more optical control elements included in the motor vehicle to control light from at least the first plurality or second plurality of the LED light sources." 137

10. [11]/[22]/[33]: "wherein the optical control elements include at least one of one or more reflectors, refractors or lenses." 138

XI. GROUND 2: THE COMBINATION OF GOTOU AND KARLSSON RENDERS OBVIOUS CLAIMS 1-33 139

A. Independent claims 1, 12, and 23 140

1. A POSA would have been motivated to combine Gotou and Karlsson with a reasonable expectation of success. 140

2. [1.P]: "A system, for a motor vehicle, comprising:" 156

[12.P]: "A non-transitory computer-readable storage medium, storing instructions that, when executed by one or more processors of a motor vehicle that includes a plurality of headlamps that each comprise a plurality of LED light sources, enable the one or more processors to:" 156

[23.P]: "A computer-implemented method for adapting light from headlamps of a motor vehicle to accommodate road shape changes, the headlamps including a plurality of LED light sources, comprising:" 156

3. [1.1]: "a plurality of headlamps, each comprising a plurality of LED light sources;" 158

See [12.P]: ("a plurality of headlamps that each comprising a plurality of LED light sources,") 158

See [23.P]: ("the headlamps including a plurality of LED light sources,") 158

4. [1.2]: "one or more processors; and" 162

See [12.P]: ("one or more processors") 162

See [23.P]: ("computer-implemented method") 162

5. [1.3]: "a memory storing instructions that, when executed by one or more of the one or more processors, enable the one or more processors to:" 166

See [12.P]: ("storing instructions that, when executed by one or more processors") 166

See [23.P]: ("A computer-implemented method") 166

6. [1.4]: "receive first data, including at least map data, indicating a road curvature upcoming along a road on which the motor vehicle is traveling;" 168

[12.4]: "receive first data, including at least map data, indicating a road curvature upcoming along a road on which the motor vehicle is traveling;" 168

[23.4]: "determining an upcoming shape change of a road, ahead of the motor vehicle, based on first data, including map data, indicating the shape change;" 168

7. [1.5]: "determine a light change, the change adapting a light pattern of the headlamps in at least one of color, intensity or spatial distribution to increase light in a direction of the road curvature ahead of the motor vehicle and shaping light based at least in part on the road curvature; and" 171

[12.5]: "determine a light change, the change adapting a light pattern of the headlamps in at least one of color, intensity or spatial distribution to increase light in a direction of the road curvature ahead of the motor vehicle and shaping light based at least in part on the road curvature; and" 171

[23.5]: "determining a light output, the output adapting a light pattern of the headlamps in at least one of color, intensity or spatial distribution to increase light in a direction associated with the shape change ahead of the motor vehicle and shaping light based on the shape change; and" 171

8. [1.6]: "control at least a first plurality of the LED light sources to provide light based at least in part on the determined light change and prior to the motor vehicle reaching the road curvature." 177

[12.6]: "control at least a first plurality of the LED light sources to provide light based at least in part on the determined light change and prior to the motor vehicle reaching the road curvature." 177

[23.6]: "prior to reaching the road shape change, causing at least a first plurality of the LED light sources to provide light based at least in part on the determined light output." 177

B. Dependent claims 178

1. [2]: "wherein the determination of the light change includes selection of the first plurality of the LED light sources." 178

[13]: "wherein the determination of the light change includes selection of the first plurality of the LED light sources." 178

[24]: "wherein the determining the light includes selecting the first plurality of the LED light sources." 178

2. [3]: "wherein the instructions include instructions that, when executed by the one or more processors, enable the one or more processors to reshape light based on the road curvature as the motor vehicle travels at least to or through the road curvature." 180

[14]: "wherein the instructions include instructions that, when executed by the one or more processors, enable the one or more processors to reshape light based on the road curvature as the motor vehicle travels at least to or through the road curvature." 180

[25]: "reshaping light based on the shape change as the motor vehicle travels at least to or through the shape change." 180

3. [4]: "wherein the reshaping of light further includes control to at least one of the first plurality of LED light sources, or a second plurality of LED light sources, including at least one LED light source different from the LED light sources of the first plurality of LED light sources, to provide reshaped light." 183

[15]: "wherein the reshaping of light further includes control to at least one of the first plurality of LED light sources, or a second plurality of LED light sources, including at least one LED light source different from the LED light sources of the

first plurality of LED light sources, to provide reshaped light." 183

[26]: "wherein the reshaping light further includes controlling at least one of the first plurality of LED light sources, or a second plurality of LED light sources, including at least one LED light source different from the LED light sources of the first plurality of LED light sources, to provide reshaped light." 183

4. [5]: "wherein the increase of light in the direction of the road curvature includes at least an increase of light emitted at a level below high-beam light and directed in the direction of the road curvature." 186

[16]: "wherein the increase of light in the direction of the road curvature includes at least an increase of light emitted at a level below high-beam light and directed in the direction of the road curvature." 186

[27]: "wherein the increase of light in the direction associated with the shape change includes at least light output that increases light emitted at a level below high-beam light and directed in the direction associated with shape change." 186

5. [6.1]: "wherein the instructions include instructions that, when executed by the one or more processors, enable the one or more processors to:" 188

[17.1]: "wherein the instructions include instructions that, when executed by the one or more processors, enable the one or more processors to:" 188

[28.1]: (no corresponding element due to claim 23 not positively reciting "processors") 188

[6.2]: "determine a second light change, the second change adapting the light pattern of the headlamps in at least one of color, intensity or spatial distribution to increase light in a direction of a second road curvature ahead of the motor vehicle, determined based on at least one of the first data or second data including at least second map data, and the second change shaping light based at least in part on the second road curvature; and" 188

[17.2]: "determine a second light change, the second change adapting the light pattern of the headlamps in at least one of color, intensity or spatial distribution to increase light in a direction of a second road curvature ahead of the motor vehicle, determined based on at least one of the first data or second data including at least second map data, and the second change shaping light based at least in part on the second road curvature; and" 188

[28.2]: "determining a second light output, the second output adapting the light pattern of the headlamps in at least one of color, intensity or spatial distribution to increase light in a direction associated with a second shape change ahead of the motor vehicle, determined based on at least one of the first data or second data including at least second map data, and the second output shaping light based at least in part on the second shape change; and" 188

[6.3]: "control at least a second plurality of the LED light sources, having at least one LED light source different from the first plurality of LED light sources, to provide light based at least in part on the determined second light change and prior to the motor vehicle reaching the second road curvature." 189

[17.3]: "control at least a second plurality of the LED light sources, having at least one LED light source different from the first plurality of LED light sources, to provide light based at least in part on the determined second light change and prior to the motor vehicle reaching the second road curvature." 189

[28.3]: "controlling at least a second plurality of the LED light sources, having at least one LED light source different from the first plurality of LED light sources, to provide light based at least in part on the determined second output and prior to the motor vehicle reaching the second shape change." 189

6. [7.1]: "wherein the increase of light in the direction of the road curvature includes at least one of expansion of the light pattern in the direction of the road curvature or an increase to intensity of light directed in the direction of the road curvature; and" 198

[18.1]: "wherein the increase of light in the direction of the road curvature includes at least one of expansion of the light pattern in the direction of the road curvature or an increase to intensity of light directed in the direction of the road curvature; and" 198

[29.1]: "wherein the increase of light in the direction associated with the shape change includes at least one of expansion of the light pattern in the direction associated with the shape change or an increase to intensity of light directed in the direction associated with the shape change; and" 198

[7.2] "wherein the determination of the light change includes determination of light changes to individual LEDs of the first plurality of LED light sources, at least one of the changes including at least one of:" 198

[18.2]: "wherein the determination of the light change includes determination of light changes to individual LEDs of the first plurality of LED light sources, at least one of the changes including at least one of:" 198

[29.2]: "wherein the determining the light output includes determining output for individual LEDs of the first plurality of LED light sources, the output including providing light directed in the direction associated with the shape change from an LED not providing light directed in the direction associated with the shape change prior to the change." 198

[7.3]: "a variation to at least one of intensity or color of individual LEDs of the first plurality of LED light sources, or" 198

[18.3]: "a variation to at least one of intensity or color of individual LEDs of the first plurality of LED light sources, or" 199

See [29.2] (no corresponding element in claim 29, no mentioning intensity or color of individual LEDs) 199

[7.4]: "providing light directed in the direction of the road curvature from an LED not providing light directed in the direction of the road curvature prior to the change." 199

[18.4]: "providing light directed in the direction of the road curvature from an LED not providing light directed in the direction of the road curvature prior to the change." 199

See [29.2] ("providing light directed in the direction associated with the shape change from an LED not providing light directed in the direction associated with the shape change prior to the change.") 199

7. [8.1]: "further comprising one or more cameras positioned to capture data indicating at least one other vehicle ahead of the motor vehicle;" 204

See [19.2] ("captured by at least one camera of the motor vehicle") 204

See [30.2] ("captured by at least one camera of the motor vehicle") 204

[8.2]/[19.1]/[30.1]: "wherein the instructions include instructions that, when executed by the one or more processors, enable the one or more processors to:" 204

[8.3]/[19.2]/[30.2]: "determine a position associated with the at least one other vehicle based at least in part on second data captured by at least one of the one or more cameras; and" 204

[8.4]/[19.3]/[30.3]: "control, based at least in part on the position, a second plurality of LED light sources providing light directed towards an area including at least a portion of the other vehicle to diminish glare to a driver of the other vehicle by a decrease to intensity of light directed towards and illuminating the area, the light that is directed towards and illuminating the area having lower intensity compared to light directed towards points laterally adjacent the area to either side." 204

8. [9.1]/[20.1]/[31.1]: "wherein:" 207

[9.2]/[20.2]/[31.2]: "the first plurality and second plurality of LED light sources include at least one common LED light source;" 207

[9.3]/[20.3]/[31.3]: "the control of the second plurality of LED light sources is based at least in part on third data received from a non-camera sensor of the motor vehicle;" 207

[9.4]/[20.4]/[31.4]: "the position includes at least one of: 207
a distance associated with the at least one other vehicle,.....207
at least one elevation associated with the at least one other vehicle, or 207
a position within image data captured by at least one of the cameras;" 207
[9.5]/[20.5]/[31.5]: "the first data includes data from a non-camera sensor of the motor vehicle;" 207
[9.6]/[20.6]/[31.6]: "either one of the control of the first plurality of LED light sources or control of the second plurality of LED light sources is subsequent to and accommodative of the other;" 207
[9.7]/[20.7]/[31.7]: "the control of the second plurality of LED light sources additionally includes termination of light from at least one LED providing light directed to the area prior to the termination; and" 207
[9.8]/[20.8]/[31.8]: "the light pattern includes at least one of an illumination pattern or an emission pattern of the headlamps." 207
9. [10]: "further including one or more optical control elements for controlling light from one or more of the LED light sources." 214
[21]: "wherein the instructions include instructions that, when executed by the one or more processors, enable the one or more processors to utilize one or more optical control elements included in the motor vehicle to control light from at least the first plurality or second plurality of the LED light sources." 214
[32]: "utilizing one or more optical control elements included in the motor vehicle to control light from at least the first plurality or second plurality of the LED light sources." 214
10. [11]/[22]/[33]: "wherein the optical control elements include at least one of one or more reflectors, refractors or lenses." 215
XII. OBJECTIVE INDICIA DO NOT SUPPORT PATENTABILITY. 215
XIII. CONCLUSION.....217

I. INTRODUCTION

I, Scott Andrews, declare as follows:

1. I have been retained on behalf of Porsche Cars North America, Inc. ("Porsche" or "Petitioner") for the above-captioned *inter partes* review proceeding to provide my expert opinions and expert knowledge. I understand that this proceeding involves U.S. Patent No. 11,208,029 ("the '029 patent") titled "Adaptive Headlight[1] System," to Yechezkal Evan Spero, and that Torchlight Technologies, LLC has purported to be the exclusive licensee of the '029 patent. I understand that the Petition submitted by Petitioner challenges claims 1-33 of the '029 patent.

---

[1] The term "headlight," is generally used to describe the concept of the resultant beam of light emitted from "headlamp," (e.g., the hardware including emitters, lenses, housing, etc., packaged into a system on a vehicle). As shown in this declaration, the '029 patent (and prior art) sometimes equates the two, and thus disclosures of "headlamps" provide "headlights" and vice versa. And a POSA would have understood based on the context of the term whether any appreciable technical meaning was intended by the author of a document.

2. The ’029 patent describes, generally, adaptive headlamp systems and methods. I am familiar with the technology described in the ’029 patent as of its earliest possible priority date, July 12, 2002.

3. I have been asked to provide my independent technical review, analysis, insights, and opinions regarding the ’029 patent and the references that form the basis for the grounds of unpatentability set forth in the Petition for *inter partes* review of the ’029 patent filed by Petitioner.

4. In preparing this declaration, I have reviewed and am familiar with all the documents cited in this declaration. I have reviewed and am familiar with the ’029 patent and its file history. I confirm that to the best of my knowledge the accompanying exhibits are true and accurate copies of what they purport to be, and that an expert in the field would reasonably rely on them to formulate opinions such as those set forth in this declaration.

5. I am being compensated at my customary rate of $500 per hour for my work on this case. My compensation is not dependent upon my opinions, my testimony, or the outcome of this case.

II. SUMMARY OF GROUNDS

6. I understand that the Petition for *inter partes* review of the ’029 patent filed by Petitioner asserts the following Grounds of unpatentability:

Ground	References	Basis	Claims Challenged

1	Beam, Kobayashi	§103	1-33
2	Gotou, Karlsson	§103	1-33

III. SUMMARY OF OPINIONS

7. In my opinion, the challenged claims of the ’029 patent would have been obvious in view of the combinations of references Petitioner asserts in the context of common knowledge and industry practice at the time of its filing.

8. Therefore, it is my opinion that the challenged claims would have been obvious in view of the disclosures in the asserted prior art references, as described in detail below.

IV. QUALIFICATIONS

9. My experience and education are detailed in my curriculum vitae (“CV”), a copy of which is provided as EX1004.

10. I have over 30 years of experience in automotive systems technology. In various positions at Cogenia Partners, LLC, TRW, and Toyota, I have been responsible for research and development projects relating to automotive systems technology, including automotive control systems, automotive safety systems, vehicle navigation systems, connected vehicle systems, and various applications of location technologies such as map databases for curve speed warning, adaptive cruise control, collision warning/avoidance systems, and automated vehicles.

11. I received an undergraduate Bachelor of Science degree in Electrical Engineering from the University of California, Irvine in 1977, and received a Master's of Science degree in Electronic Engineering from Stanford University in 1982.

12. From 1977 to 1983, I held engineering positions at Ford Aerospace and Teledyne Microwave where I worked on, among other things, transmitter-receiver systems for guided missiles and other related military electronics. From 1983 to 1993, I worked at TRW, Inc. ("TRW") in the Space & Electronics Group, where I served as a project manager, a department manager, and an assistant program manager on a variety of spacecraft communications systems projects. One exemplary project I worked on was an adaptive antenna array that used amplitude and phase modulation together with a digital filtering system to adaptively generate nulls in the antenna gain pattern in response to coherent radio signals. This system was intended to reduce the effect of narrow spectrum jamming signals on spread spectrum communications by dynamically adapting the antenna array based on radio illumination from external sources. My last position at TRW in the Space & Electronics Group was as the manager of the Monolithic Microwave Integrated Circuits ("MMIC") Products Organization. In that role, I developed TRW's commercial gallium arsenide (GaAs) MMIC business. During my time in the MMIC Products Organization, I helped produce one of the first cellular phone

related RF integrated circuits. I also developed the first single chip 94 GHz radar, intended for use in automotive adaptive cruise control systems. While I was at TRW in the Space & Electronics Group, I received several awards for outstanding performance on independent research and development projects.

13. In 1993, while still at TRW, I moved to the Automotive Electronics Group and became the Director of Systems Engineering and Advanced Products. In this role, I was responsible for the overall management of TRW's advanced development programs in the automotive electronics space. These programs included, among other things, wireless remote keyless entry systems, vehicle tracking and location systems (e.g., roadside assistance and emergency response systems, including those using global positioning system ("GPS") technology), emergency vehicle warning systems (e.g., transmitter-receiver systems that would provide a warning inside the user's vehicle when an active emergency vehicle was in the vicinity), automotive collision avoidance radar, and other types of vehicle information systems. I served in this role until 1996. While at TRW, I also led the development of an in-vehicle information system based on off-board map databases, wireless data communications, and radio-based location technologies, and developed business and product strategies related to various remotely connected information services.

14. From 1996 to 2000, I worked at Toyota Motor Corporation ("Toyota") at the Toyota Headquarters in Toyota City, Japan, as a Project General Manager in the R&D Management Division. My responsibilities included the conceptualization and development of multimedia systems and new technology products and services for Toyota's future generations of passenger vehicles. My work at Toyota included, among other things, automated vehicles, applications of digital map database, including automated braking systems, curve speed warning systems, and adaptive cruise control, as well as early work on various connected vehicle technologies using on-board computing, map databases, and off-board communications to provide various services to the vehicle and the vehicle occupants.

15. While at Toyota, I also established the Automotive Multimedia Interface Collaboration ("AMI-C"), a partnership of carmakers to develop a uniform computing architecture for vehicle multimedia systems. AMI-C was primarily aimed at developing standards for the integration and use of consumer devices in vehicles, and for a common computing platform to facilitate the rapid introduction of new systems and software in the vehicle. For example, a typical AMI-C system might support the aftermarket integration of a cellular telephone subsystem and supporting software applications to provide location-based services

such as off-board navigation and traffic information to support an in-vehicle navigation display system.

16. I founded Cogenia Partners, LLC as an independent consultant in the intelligent vehicles and mobile systems industry in January 2001. My primary clients have been various navigation and mobile device makers, automotive manufacturers, and the U.S. Department of Transportation. Since 2001 my work has focused on systems for delivery of services to vehicle occupants, either through personal devices, or through equipment embedded in the vehicle. These systems have included applications for vehicle and roadway safety, information and entertainment, and operational concepts and system designs for various types of connected vehicle systems

17. Between 2006 and 2011, I served as the Chief System Architect for a large Connected Vehicle test bed in the greater Detroit area. This project included extensive systems engineering work, and real-world test and evaluation of short range vehicle to roadside and vehicle to vehicle communications systems and applications, including various tolling applications. This work also included active involvement with various vehicle communications standards, including SAE J2735, SAE J2945, and a variety of IEEE standards associated with Dedicated Short Range Communications (DSRC) systems used, for example in vehicle

management, traffic data collection and distribution, safety, tolling and other applications.

18. More recently I have served as a technical lead on a series of projects to support the National Highway Traffic Safety Administration (NHTSA) with the development of performance standards for connected vehicle equipment in vehicles, the development of a security credential management system, and the development and simulation of a sensor based system to detect and mitigate the introduction of erroneous and/or malevolent information into the connected vehicle network. I have also led the development of a variety of test and evaluation systems for the Federal Highway Administration to support the assessment of connected vehicle systems in the roadway environment and developed security credential management systems in support of the connected vehicle effort.

19. In the various positions mentioned above, I was responsible for research and development projects relating to numerous vehicle information systems, user interface systems, sensory systems, control systems and safety systems, and also had the opportunity to collaborate with numerous researchers and suppliers to the auto industry. While at Toyota, I worked with a supplier on a concept for supplementing adaptive (steerable) headlights with navigational maps, so that the vehicle headlights would be controlled, at least in part by the curvature of the upcoming roadway based on the map data stored in the vehicle. This project

also included warning systems to alert the driver if they were approaching a curve at excessive speed. Other related projects include alignment and control of radar beams for adaptive cruise control, including positioning the radar beam to adapt to curves in the forward vehicle trajectory, determination of roadway curves ahead using cameras, and a laser system for detecting the curvature of the road from reflective markers used to guide snowplows in winter conditions where the road edges cannot be otherwise detected.

20. I am a member of the Institute of Electrical and Electronics Engineers ("IEEE"), the IEEE Standards Association, the Institute of Navigation ("ION"), the International Council on Systems Engineering ("INCOSE"), and the Society of Automotive Engineers ("SAE"). I am a named inventor on twenty-four U.S. patents, three Japanese patents, and one European patent. A list of my patents can be found in my curriculum vitae attached as Exhibit 1004. I have authored numerous technical papers, and have been invited to give professional talks at various conferences, including the World Congress on Intelligent Transportation Systems, the International Task Force on Vehicle Automation, the International Congress on Transportation Electronics (Convergence), and others. My curriculum vitae (Ex. 1004) includes a list of all publications I have authored in the last 10 years and provides further detail regarding my background and qualifications.

V. MATERIALS CONSIDERED

21. In formulating my opinions, I have relied upon my training, knowledge, and experience that are relevant to the ’029 patent. I have read and agree with the opinions offered by Dr. Jianzhong Jiao in his expert declaration in IPR2022-01586, and herein adopt those opinions as my own. Furthermore, I have specifically considered the following documents, in addition to other sources cited in this Declaration:

Exhibit #	***Description***
1001	U.S. Patent No. 11,208,029 B2 to Spero (“the ’029 patent”)
1002	Prosecution File History of U.S. Patent No. 11,208,029 B2 (“’029 File History”)
1004	*Curriculum Vitae* of Scott Andrews
1005	U.S. Patent No. 6,144,158 to Beam
1006	U.S. Patent Publication No. 2001/0019486 A1 to Thominet
1008	U.S. Patent No. 6,049,749 to Kobayashi
1009	WIPO Patent Publication No. 2002/04247 to Braun *et al.*
1010	WIPO Patent Publication No. 1998/54030 to Karlsson
1011	WIPO Patent Publication No. 2001/01038 to Harbers
1012	U.S. Patent No. 5,588,733 to Gotou
1015	Westermann, “History and Scientific Back-up,” 48th Session of GRE, EUREKA Project 1403, Informal Document No. 30, April 30, 2002
1016	“Adaptive Front Lighting Systems (AFS),” 48th Session of GRE, EUREKA Project 1403, Informal Document No. 28, April 12, 2002
1017	Hogrefe et al., “Adaptive Light Pattern – A New Way to Improve Light Quality,” SAE Transactions, Vol. 106, No. 6, February 27, 1997

Exhibit #	*Description*
1018	Löwenau et al., "Adaptive Light Control – A New Light Concept Controlled by Vehicle Dynamics and Navigation, SAE Transactions, Vol. 107, No. 6, pp. 33-38, February 26, 1998
1019	Manassero et al., "Adaptive Headlamp: A contribution for Design and Development of Motorway Light," SAE Transactions, Vol. 107, No. 6, February 26, 1998
1020	Michael Hamm, "System Strategies for Adaptive Lighting Systems," 2001 Symposium: Progress in Automobile Lighting (PAL), pp. 368-380, September 26, 2001
1022	U.S. Patent No. 5,975,734 to Müller
1023	Manassero et al., Adaptive Lighting Systems: Technical Solutions and Methodological Approach for Photometric Specifications, Progress in Automotive Lighting Vol. 6, pp. 514-525 (1999).
1024	Hanno Westermann, Lighting Performance Requirements in Vehicle Lighting Exemplified by System Requirements for AFS, Progress in Automotive Lighting Vol. 6, pp. 807-820 (1999).
1025	Diem et al., Analysis of the Eye-Movement Behaviour During Use Moveable Headlamps, Progress in Automotive Lighting Vol. 5, pp. 185-207 (1999).
1026	Kobayashi & Sugimoto, Development of the Phase-I AFS Front Lighting System, Progress in Automotive Lighting Vol. 5, pp. 449-464 (1999).
1027	Alejandro Vukotiich, Evaluation of the applicability of digital maps for the reconstruction of the real street shape, Progress in Automotive Lighting Vol. 6, pp. 774-790 (1999).
1028	Bernhard Wörner, Adaptive Frontlighting – Experimental System, Development and Functional Evaluation, Progress in Automotive Lighting Vol. 6, pp. 844-853 (1999).

Exhibit #	*Description*
1029	Mark van den Berg, Development of high Brightness LED's for Automotive Applications, Progress in Automotive Lighting Vol. 9, 987-993 (2001).
1030	Assessment of Headlamp Glare and Potential Countermeasures, Survey of Advanced Front Lighting System (AFS) Research and Technology, National Highway Traffic Safety Administration (2005)
1031	Watanabe et al., The Research on the Effectiveness of AFS Bending Lamp in Japanese Road Environment, Progress in Automotive Lighting Vol. 9, 1042-1053 (2001).
1034	U.S. Patent No. 6,127,947 to Uchida *et al*.

VI. LEGAL STANDARDS

22. I have also relied upon various legal principles (as explained to me by Petitioner's counsel) in formulating my opinions. My understanding of these principles is summarized below.

23. I have been told the following legal principles apply to analysis of patentability. I also have been told that, in an *inter partes* review proceeding, a patent claim may be deemed unpatentable if it is shown by a preponderance of evidence that the claim is anticipated by one prior art reference under 35 U.S.C. § 102, or rendered obvious by one or more prior art references under 35 U.S.C. § 103.

24. I understand that documents and materials, such as printed publications or patents, that qualify as prior art can be used to render a patent claim as anticipated or as obvious.

25. I understand that once the claims of a patent have been properly construed, the second step in determining anticipation or obviousness of a patent claim requires a comparison of the properly construed claim language to the prior art on a limitation-by-limitation basis.

A. My Understanding of Claim Construction

26. I understand that during an *inter partes* review proceeding, claims are to be construed in light of the specification as would be read by a person of ordinary skill in the relevant art ("POSA") at the time of the purported priority date. I understand that claim terms are given their ordinary and customary meaning as would be understood by a POSA in the context of the entire disclosure. A claim term, however, will not receive its ordinary meaning if the patentee acted as his own lexicographer and clearly set forth a definition of the claim term in the specification. In this case, the claim term will receive the definition set forth in the patent.

B. A Person of Ordinary Skill in the Art

27. I understand that a POSA is presumed to be aware of all pertinent art, thinks along conventional wisdom in the art, and is a person of ordinary creativity—not an automaton.

28. I have been asked to consider the level of ordinary skill in the field that someone would have had at the time the alleged invention was made. In deciding the level of ordinary skill, I considered the following:

- the levels of education and experience of persons working in the field;
- the types of problems encountered in the field; and
- the sophistication of the technology.

29. I understand that the relevant time for considering whether a claim would have been obvious to a POSA is at the time of the alleged invention, which I have been told to assume for this case is July 12, 2002.

30. Regardless of if I use "I" or "POSA" during my technical analysis below, all of my statements and opinions are to be understood to be based on how a POSA would have understood or read a document at the time of the alleged invention.

C. My Understanding of Obviousness

31. I understand that a patent claim is unpatentable if the claimed invention would have been obvious to a POSA at the time of the alleged invention. I understand that this means that even if all of the elements of the claim cannot be found in a single prior art reference that would anticipate the claim, the claim can still be unpatentable.

32. It is my understanding that to obtain a patent, a claimed invention must have been, as of its earliest possible priority date, non-obvious in view of the prior art in the field. I understand that a patent claim is obvious when the differences between the subject matter sought to be patented and the prior art are such that the subject matter as a whole would have been obvious to a POSA at the time the alleged invention was made.

33. When considering the issues of obviousness, I have been told that I am to do the following:

- Determine the scope and content of the prior art;
- Ascertain the differences between the prior art and the claims at issue;
- Resolve the level of ordinary skill in the pertinent art; and
- Consider evidence of secondary indicia of non-obviousness (if available).

34. With respect to determining the proper scope of prior art to examine, I understand that in order for a prior art reference to be properly used in an obviousness ground under 35 U.S.C. § 103, the prior art reference must be analogous art to the claimed invention. I have been told that a reference is analogous art to the claimed invention only if: (1) the reference is from the same field of endeavor as the claimed invention; or (2) the reference is reasonably pertinent to the particular problem solved by the inventor.

35. I understand that factors relevant to determining the proper field of endeavor include the inventor's explanations of the subject matter (including the patent specification), as well as the claimed invention's structure and function. And I further understand that to be reasonably pertinent to the particular problem solved by the inventor, a prior art reference must logically commend itself to the inventor's attention in considering his or her problem.

36. I have been told that an analogous reference may be modified or combined with other analogous references or with the POSA's own knowledge if the person would have found the modification or combination obvious. I have also been told that a POSA is presumed to know all relevant, analogous prior art, and that the obviousness analysis may take into account the inferences and creative steps that a POSA would employ.

37. In determining whether a prior art reference would have been combined with another prior art reference or other information known to a POSA, I have been told that the following principles may be considered:

- A combination of familiar elements according to known methods is likely to be obvious if it yields predictable results;
- The simple substitution of one known element for another is likely to be obvious if it yields predictable results;

- The use of a known technique to improve similar devices, products, or methods in the same way is likely to be obvious if it yields predictable results;
- The application of a known technique to a prior art reference that is ready for improvement is likely obvious if it yields predictable results;
- Any need or problem known in the field and addressed by the reference can provide a reason for combining the elements in the manner claimed;
- A skilled artisan often will be able to fit the teachings of multiple references together like a puzzle; and
- The proper analysis of obviousness requires a determination of whether a POSA would have a "reasonable expectation of success"—not "absolute predictability" of success—in achieving the claimed invention by combining prior art references.

38. I understand that whether a prior art reference renders a claim unpatentable as obvious is determined from the perspective of a POSA. I have also been told that, while there is no requirement for the prior art to contain an express suggestion to combine known elements to achieve the claimed invention, a suggestion to combine known elements to achieve the claimed invention may come from the prior art as a whole or individually, as filtered through the knowledge of a

POSA. In addition, I have been told the inferences and creative steps a POSA would employ are also relevant to the determination of obviousness.

39. I also understand that when a work is available in one field, design alternatives and other market forces can prompt variations of it, either in the same field or in another. I have also been told that if a POSA can implement a predictable variation and would see the benefit of doing so, that variation is likely to be obvious. I have been told that in many fields, there may be little discussion of obvious combinations, and in these fields market demand—not scientific literature—may drive design trends. I have been told that when there is a design need or market pressure and there are a finite number of predictable solutions, a POSA has good reason to pursue those known options.

40. I have been told there is no rigid rule prescribing a reference or combination of references must contain a "teaching, suggestion, or motivation" to combine references. But I also have been told that the "teaching, suggestion, or motivation" test can be a useful guide in establishing a rationale for combining elements of the prior art. I have been told this test poses the question as to whether there is an express or implied teaching, suggestion, or motivation to combine prior art elements in a way that realizes the claimed invention, and that it seeks to counter impermissible hindsight analysis.

VII. LEVEL OF ORDINARY SKILL IN THE ART

41. In my opinion, a POSA in the context of the ’029 patent as of July 12, 2002 (the earliest possible priority date of the ’029 patent) would have had a bachelor of science (B.S.) degree in mechanical engineering, electrical engineering, optical engineering, applied physics, or an equivalent field, as well as at least 2 years of industry experience in the area of automotive lighting and lighting-control systems. The POSA may work as part of a team, for example, with computer engineers to integrate, program, etc., controllers and various control inputs to affect control of a given light source.

42. Experience could take the place of some formal training, as domain knowledge may be learned on the job. This description is approximate, and a higher level of education or skill might make up for less experience and vice versa.

43. Based on my education, training, and professional experience in the field of the claimed invention, I am familiar with the level and abilities of a person of ordinary skill in the art at the time of the claimed invention. I also base this opinion on my experience hiring and managing approximately 20 engineers engaged in the development of advanced automotive electronics systems, and in leading engineering staff from approximately 30 different automotive manufacturers and suppliers as part of various research and development consortia. Additionally, I met at least these minimum qualifications to be a person having

ordinary skill in the art at least as of July 12, 2002. Further, although my qualifications may exceed those of the hypothetical person having ordinary skill in the art defined above, my analysis and opinions regarding the '029 Patent have been rendered from the perspective of a person having ordinary skill in the art at the time of the invention.

VIII. OVERVIEW OF THE '029 PATENT CLAIMS

A. Technology Overview of the Patent Claims

44. The '029 patent claims relate to motor vehicle headlamps; however the specification of the '029 patent focuses primarily on *non-vehicle* applications. Of the approximately 100 columns of description, most all of the vehicular headlamp disclosure is centered around Figure 15, and spans only around six columns (51-56).

45. Because the focus of the claims relates to motor vehicle headlamp systems and methods, I provide the following historical background related to automotive headlamps, the application of adaptive front lighting systems/beam control, LED advantages recognized in the art, and known glare-reduction and anti-blinding systems.

46. By mid-2000 and several years before the earliest possible priority date, all the technologies claimed in the '029 patent were well known by developers of automotive lighting systems, and specifically adaptive automotive

lighting systems. No individual elements of the ’029 patent claims were new, and there was nothing new about the manner in which those elements were combined in the claims. I know this because I had first-hand experience in automotive systems, including lighting control systems and related beam steering and beam forming technologies.

47. Indeed, adaptive lighting for headlamps to control one or more illumination characteristics was well known. As early as the 1940s and 1950s, vehicles such as the Tucker Torpedo and Citroen DS-19 included headlamps that swiveled with the turning angle of the wheels via mechanical linkage. EX1030, 3-4. Most notably with relation to the technology claimed in the ’029 patent, from about 1992 to 1999, a global consortium of headlamp and automobile manufacturers participated in the EUREKA Project to advance development of adaptive front lighting systems (AFS). EX1015, 3-6; EX1016, 1-19; EX1023, 514-515; EX1024, 819. The EUREKA Project was a well known consortium that a POSA would have been aware of. The EUREKA Project investigated, studied, and recommended AFS functions, including dynamic glare control, explored reflectance of pedestrians and road signs, and other headlamp features. EX1015, 4.

48. By 1997, adaptive (dynamic) lighting’s potential to increase road safety, driving safety, and drivers’ visual comfort as an improvement over fixed (static) headlamps was well known. EX1017, 3-10. Other background references

support this finding. EX1018, 33-36 ("A new light concept called Adaptive Light Control (ALC) is developed with the aim to improve night time traffic safety."); EX1019, 1-2 ("A major breakthrough in improving visibility, safety and comfort under all driving conditions is given by a headlamp with adjustable light intensity and beam pattern according to the vehicle speed, steering wheel angles and different driving conditions."); EX1020, 368, 370, 374-378 ("The car's sensors analyze and evaluate the driving situation and generate a light distribution that is adapted to that particular situation. In this process, not only the driver's comfort is increased but the visibility is improved also. This has a direct positive impact on traffic safety."); EX1024, 819 ("The challenge of such a system approach and the necessary and not so easy change towards performance and system requirements was clearly seen - but also the prospects of possible safety improvement."); EX1025, 202 ("One explanation could be that because of the available luminous flux in direction of driving, the driver has the ability to recognize the subsequent direction peripherally and can fixate other interesting objects in the road area. With other words the driver has more time for driving and the tiredness of the eyes could be reduced."); EX1028, 844 ("The driver's comfort and safety can be improved considerably by adaptive motor vehicle headlighting, with the today's technical means in lighting design and manufacturing, as well as sensors and communication systems in cars.").

49. Adaptive lighting used multiple directional light sources (e.g., multiple directional beams, such as light modules or beam contributors) to produce an adaptive light pattern by varying illumination characteristics including beam intensity, beam shape, beam color, beam direction around curved roads, and glare reduction. EX1017, 3-10 ("[A] curve or an intersection can be adaptively illuminated before reaching actually the point when the steering wheel is turned or the turn indicator is operated."); EX1018, 33-36 ("The advantage of using Adaptive Light Control is shown in Fig. 5, where one observes a country road lit correctly. Instead of illuminating some fields or trees, the available light is directed dynamically in the direction where it is actually needed, enhancing the visual information for the driver."); EX1019, 1-2 ("A major breakthrough in improving visibility, safety and comfort under all driving conditions is given by a headlamp with adjustable light intensity and beam pattern according to the vehicle speed, steering wheel angles and different driving conditions."); EX1020, 368, 370, 374-378 ("The results show, that significant improvements can be proven by the adaptive headlamp system, without generating additional glare for oncoming traffic").

50. As an example, Hogrefe shows how adapted light patterns can increase safety on curved roads, at high speeds, and within cities, for example, by varying improved lateral illuminance (shaping light around curves), increasing length of

the beam to improve visibility, and expanding the beam shape to capture a wider angle, for example. And as Hogrefe's Figure 3 explains, "the individual light *pattern* of multiple sub-units sum up to the total adaptive light pattern." EX1017, FIG. 3 (emphasis in original).

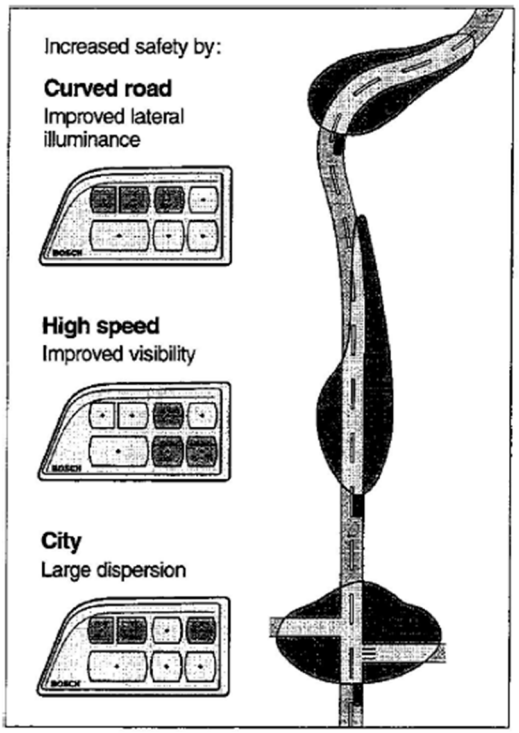

Fig.1: Three standard driving situations with adapted light pattern seen from the bird eye's view.

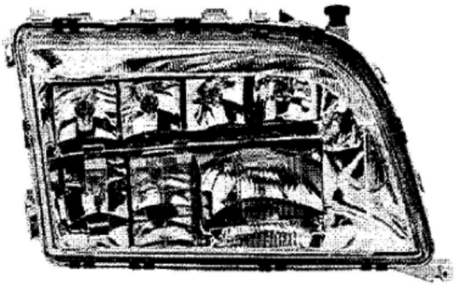

Fig 4: ALP *headlamp* sample

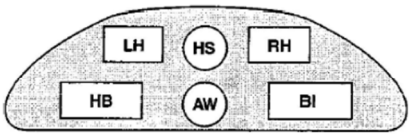

Single components:

LH	Left hand bend	**BI**	Basic illumination
RH	Right hand bend	AW	Adverse weather illumination
HB	High beam	HS	Hot spot

Fig. 5 Advanced ALP sample layout

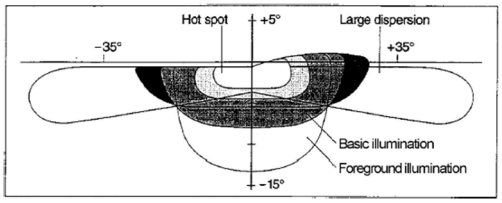

Fig. 3: Light pattern of multiple beam *headlamp (Isolux* curves in wall projection):
The individual light *pattern* of multiple sub-units sum up to the total adaptive light pattern

EX1017, FIGS. 1 and 3-5.

51. Adaptive lighting to reduce glare in a portion of a driver's field-of-view was also well known. In 1999, the industry understood that the beam pattern in AFS systems could be adapted for different driving, weather, and environment conditions and to keep glare at a lower level when meeting or following other vehicles on the road. EX1023, 514-515. AFS systems could use existing sensor signals on the vehicle, measure ambient conditions, modify the lighting performance to the traffic conditions, and prevent deteriorating glare effects for other road users. EX1024, 815-816.

52. By 2000, adaptive headlamp systems with multiple directional light beams were developed with various means of sensors to detect surroundings while driving and resulted in glare reduction for oncoming and preceding vehicle drivers. EX1005, 1:5-3:44, 4:9-59; EX1010, 1:10-26, 9:18-26, 20:29-32; *see also* EX1015, 6-18, 21; EX1016, 1-19 ("[A]ll GRE experts acknowledge the experience with the new technology of front lighting, designed to improve the illumination and to adapt it to various driving situations, whilst reducing glare."); EX1009, 6:4-7; 16:6-25, 20:15-33 ("According to an aspect of some embodiments of the present invention, the pattern recognition application identifies oncoming vehicles and automatically adjusts illumination provided by the luxels to prevent glare from light provided by the luxels from blinding a driver of the oncoming vehicle."). Further, arrays of independently controlled narrow-beam directional light sources, for example, light-

emitting diode (LED) arrays, were developed with sufficient illuminance, directionality, and dynamic control as an alternative to traditional incandescent and gas discharge bulbs to provide adaptive light patterns and real-time feedback. EX1005, 1:5-3:44, 4:9-59; EX1010, 1:10-26, 9:18-26, 20:29-32; EX1015, 6-18, 21; EX1009, 16:6-25, 20:15-33.

53. As I explain in this declaration, while the ’029 patent’s description focuses on non-automotive systems, the ’029 patent’s claims are directed to systems and methods previously known in the art for controlling LED headlamps, for example, using map data (e.g., from a GPS system or navigation beacons) indicating a road curvature. A POSA would have immediately recognized that the ’029 patent’s claims simply recite known control schemes implemented by a *well known controller* that *controls* which particular LEDs or LED arrays and modules of the headlamp are on and which are off (or dimmed) *based on a known control input*, namely map data, for better visibility around curves. Put another way, the claims take a *known control input* (map data) and apply it to a *known way* of controlling light patterns and intensity (output of an array of LEDs for a motor vehicle headlamp).

54. An example of this obvious system function is found in claim 1. Claim 1 recites a system for a motor vehicle having one or more processors that:

receive first data, *including at least map data, indicating a road curvature upcoming along a road* on which the motor vehicle is traveling;

determine a light change, the change adapting a light pattern of the headlamps in at least one of color, intensity or spatial distribution to *increase light in a direction of the road curvature ahead of the motor vehicle and shaping light based at least in part on the road curvature*; and

control at least a first plurality of the LED light sources to provide light based at least in part on the determined light change and *prior to the motor vehicle reaching the road curvature*.

EX1001, 95:55-96:8.[2] The dependent claims do not add any novel features; rather, they only add known features to the system, such as: responding to additional road curvatures; using known glare-reduction techniques such as having camera or sensors to determine whether other leading or trailing vehicles are present; or using other inputs (that often existed on a vehicle) to adjust output light beam intensity, shape, direction, etc. It is my opinion that the dependent claims are

[2] Emphasis added throughout, unless otherwise noted.

similarly or equally obvious over the applied references, and that none of the dependent claims recite anything new or non-obvious.

55. Again, in contrast to the background of the development of both LED headlamps and adaptive headlamp beam control I have provided above, the ’029 patent focuses primarily on *non-vehicle* applications. Of the approximately 100 columns of description, most all of the vehicular headlamp disclosure is centered around Figure 15, and spans only around six columns (51-56). Taking the description as it is, the ’029 patent’s vehicle headlight system includes a headlamp 270, a controller 279, and sensors 280 on a vehicle 271. EX1001, 53:24-56:61, FIG. 15. Headlamp 270 includes one or more clusters 276 (290), 281 (282), 285 (286), 287 (288, 289) of differently aimed solid-state light sources (SLSs) such as light-emitting diodes (LEDs) 275, 277, 278, 283, 284, respectively. EX1001, 53:24-56:61, FIG. 15.

56. Without providing detail, the ’029 patent states that a “GPS system on the car may also let the headlamps system know of curves up ahead, one-way traffic and others factors such that the headlamp may be operated in the optimal mode at that instantaneous location.” EX1001, 51:63-67. Presumably, the ’029 patent recognizes that a POSA would have been able to determine what the “optimal mode at that instantaneous location” includes, since the ’029 patent does

not specifically describe algorithms or control mechanism and steps to achieve this, and no teaching is provided.

57. In my opinion, based on my experience, a POSA would have readily incorporated a GPS input into a controllable LED headlamp system or substituted an LED array into a GPS-controlled system using a non-LED source, as demonstrated by the applied prior art. By 1999, there were AFS headlamps "controlled by path prediction based on a vehicle's dynamics and navigation data." EX1025, 186. Although live data could be used by vehicle sensors, it was well known that GPS navigation system gave additional advantages by providing more accurate information on driving regions. EX1026, 461-462 ("To obtain more accurate information on driving regions, it is advantageous to use data from a GPS navigation system."); EX1024, 815-816. The increased accuracy of navigation systems at that time made it possible to anticipate the light distribution needed during critical driving conditions, such as curves and crossings. EX1023, 525 ("This predictive system would make possible to anticipate the needed light distribution avoiding dangerous changes in the beam during critical driving conditions such as curves and crossing."); EX1027, Abstract.

58. As mentioned above, motor vehicles with headlamps that could swivel with the wheels such that the headlight beam direction followed the direction of the vehicle were available as early as the 1940s. In 1999, studies showed that

moveable headlamps, which followed a road's curvature, had advantages over traditional static headlamps, such as significantly increasing visibility along a curve, and allowing the driver to perceive additional peripheral objects in the driving direction, without creating negative effects on driver behavior. EX1023, 524 (Table 1 showing increased visibility along straight and curved roads with adaptive headlight systems); EX1025, 202, 205-206 ("[B]ecause of the available luminous flux in direction of driving, the driver has the ability to recognize the subsequent direction peripherally and can fixate other interesting objects in the road area."). Further, conventional headlamps, with static high and low beams did not respond to changing driving conditions, and multiple beams were needed to provide "bending beams" for different types of road curvatures ("high speed," "middle speed," "low speed," "cross-roads"). EX1026, 451-452.

59. As I have explained, there was nothing new about using map data to control directionality of headlamp beams, as recited in the '029 patent claims. Nor was there any technical challenge in evolving from controlling directionality of conventional headlamp beams to controlling directionality of LED headlamp beams (or vice versa).

60. Regarding anti-blinding/anti-glare features, the '029 patent's controller 279 receives traffic data of oncoming vehicles from sensors 280, and adjusts illumination to avoid blinding oncoming traffic. EX1001, 53:54-54:7. Again, this

control scheme was known, as I explain in this declaration. So, none of the ’029 patent’s features were new, and indeed well–known prior to the ’029 patent’s earliest possible priority date.

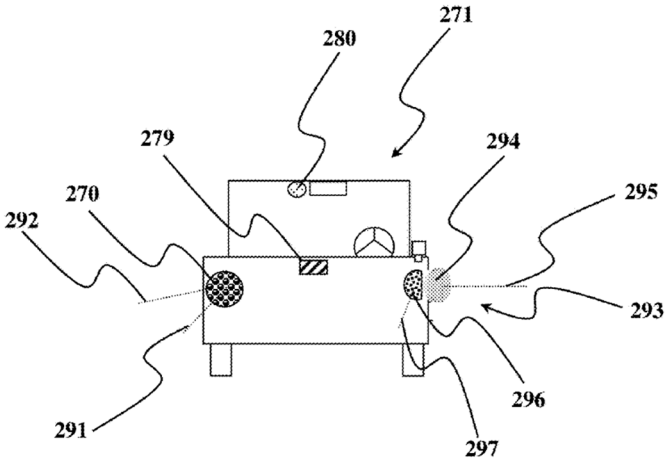

FIG. 15

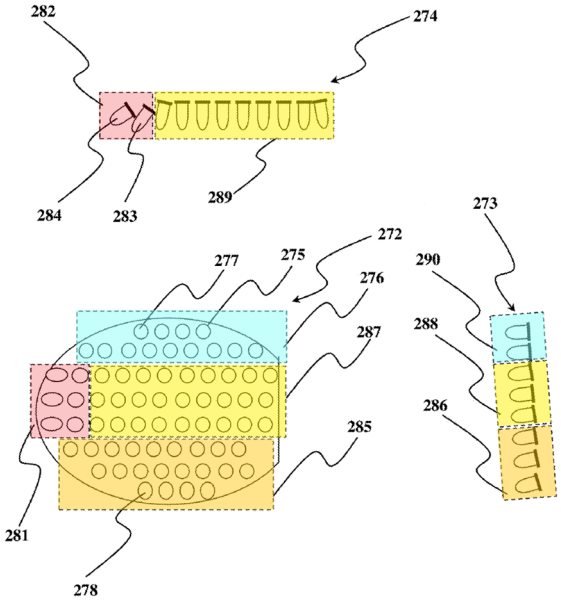

EX1001, FIG. 15 (annotated).

61. Indeed, as I will explain here, Ground 1 of the Petition demonstrates why it would have been obvious to a POSA to modify an adaptive LED adaptive

headlamp to utilize map data as a control input. Ground 2 of the Petition demonstrates why it would have been equally obvious to a POSA to modify a map data input controlled adaptive headlamp to utilize LEDs as light sources. In my opinion, the approaches in both Grounds 1 and 2 would have been obvious to a POSA, and thus claims 1-33 would have been obvious no matter how a POSA viewed the prior art.

B. Independent claims 1, 12, and 23

62. The independent claims recite substantially similar elements and concepts such that the same prior art disclosures are applicable to and map to corresponding elements across the independent claims. That is, even if the words used in a corresponding claim or corresponding claim feature are not exactly the same, the concepts, functions, and scope, are same. And so same prior art applies.

63. For example, independent claim 1 recites a "system, for a motor vehicle," with a plurality of headlamps each comprising a plurality of LED light sources, one or more processors, and memory storing instructions enable the processor(s) to perform the claimed light changes relative to a road curvature, while independent claim 12 recites a "non-transitory computer-readable storage medium, storing instructions that, when executed by one or more processors of a motor vehicle that includes a plurality of headlamps that each comprise a plurality of LED light sources, enable the one or more processors to," *do the same functions*

as recited in claim 1. EX1001, 95:55-96:8, 97:45-62. Similarly, independent claim 23 recites a "computer-implemented method" "the headlamps including a plurality of LED lighting sources," *carrying out the same functions*. EX1001, 99:28-43.

64. So, throughout this declaration, the disclosures mapped below that relate to the processor(s), memory, and instructions of claim 1, for example, apply equally to and render obvious the system claims (1-11), the non-transitory computer-readable storage medium claims (12-22) and the computer-implemented method claims (23-33). Substantively, the disclosures showing the obviousness of the claims apply no matter how the features are phrased within the different claim sets—either in the system claims, the non-transitory computer-readable storage medium (e.g., memory) claims, or the computer-implemented method claims.

65. The table below highlights the overwhelming overlap between the independent claims, and shows why a POSA would have understood that the same disclosures in the applied references satisfy the corresponding claim elements:

Table 1: Independent Claim Elements

Claim Element	Independent Claim 1		Independent Claim 12		Independent Claim 23
[1.P]	A system, for a motor vehicle, comprising:	[12.P]	A non-transitory computer-readable storage medium, storing instructions	[23.P]	A computer-implemented method for adapting light from headlamps of a motor vehicle to accommodate road shape changes, the headlamps including

			that, when executed by one or more processors of a motor vehicle that includes a plurality of headlamps that each comprise a plurality of LED light sources, enable the one or more processors to:		a plurality of LED light sources, comprising:
[1.1]	a plurality of headlamps, each comprising a plurality of LED light sources;		*See* 12.P (a plurality of headlamps that each comprise a plurality of LED light sources,)		*See* 23.P (the headlamps including a plurality of LED light sources,)
[1.2]	one or more processors; and		*See* 12.P (one or more processors)		*See* 23.P (A computer-implemented method)
[1.3]	a memory storing instructions that, when executed by one or more of the one or more processors, enable the		*See* 12.P (storing instructions that, when executed by one or more processors)		*See* 23.P (A computer-implemented method)

	one or more processors to:				
[1.4]	receive first data, including at least map data, indicating a road curvature upcoming along a road on which the motor vehicle is traveling;	[12.4]	receive first data, including at least map data, indicating a road curvature upcoming along a road on which the motor vehicle is traveling;	[23.4]	determining an upcoming shape change of a road, ahead of the motor vehicle, based on first data, including map data, indicating the shape change;
[1.5]	determine a light change, the change adapting a light pattern of the headlamps in at least one of color, intensity or spatial distribution to increase light in a direction of the road curvature ahead of the motor vehicle and shaping light based at least in part on the road curvature; and	[12.5]	determine a light change, the change adapting a light pattern of the headlamps in at least one of color, intensity or spatial distribution to increase light in a direction of the road curvature ahead of the motor vehicle and shaping light based at least in part on the road curvature; and	[23.5]	determining a light output, the output adapting a light pattern of the headlamps in at least one of color, intensity or spatial distribution to increase light in a direction associated with the shape change ahead of the motor vehicle and shaping light based on the shape change; and

[1.6]	control at least a first plurality of the LED light sources to provide light based at least in part on the determined light change and prior to the motor vehicle reaching the road curvature.	[12.6]	control at least a first plurality of the LED light sources to provide light based at least in part on the determined light change and prior to the motor vehicle reaching the road curvature.	[23.6]	prior to reaching the road shape change, causing at least a first plurality of the LED light sources to provide light based at least in part on the determined light output.

C. Dependent claims

66. Similarly, the dependent claims of each set can be grouped according to the same or substantially the same feature:

- 2/13/24
- 3/14/25
- 4/15/26
- 5/16/27
- 6/17/28
- 7/18/29
- 8/19/30
- 9/20/31

- 10/21/32
- 11/22/33

67. As with the independent claims, substantively, the disclosures showing the obviousness of the claims apply no matter how the features are phrased within the different claim sets—either in the system claims, the non-transitory computer-readable storage medium (e.g., memory) claims, or the computer-implemented method claims.

68. The table below highlights the overwhelming overlap between the dependent claims, again showing why a POSA would have understood that the same disclosures in the applied references satisfy the corresponding claim elements:

Table 2: Dependent Claim Elements

Claim Element	Independent Claim 1 set		Independent Claim 12 set		Independent Claim 23 set
[2]	The system of claim 1, wherein the determination of the light change includes selection of the first plurality of the LED light sources.	[13]	The storage medium of claim 12, wherein the determination of the light change includes selection of the first plurality of the LED light sources.	[24]	The method of claim 23, wherein the determining the light includes selecting the first plurality of the LED light sources.
[3]	The system of claim 1, wherein	[14]	The storage medium of	[25]	The method of claim 23, further

	the instructions include instructions that, when executed by the one or more processors, enable the one or more processors to reshape light based on the road curvature as the motor vehicle travels at least to or through the road curvature.		claim 12, wherein the instructions include instructions that, when executed by the one or more processors, enable the one or more processors to reshape light based on the road curvature as the motor vehicle travels at least to or through the road curvature.		comprising reshaping light based on the shape change as the motor vehicle travels at least to or through the shape change.
[4]	The system of claim 3, wherein the reshaping of light further includes control to at least one of the first plurality of LED light sources, or a second plurality of LED light sources, including at least one LED light source different from the LED light sources of the first plurality of LED light sources, to	[15]	The storage medium of claim 14, wherein the reshaping of light further includes control to at least one of the first plurality of LED light sources, or a second plurality of LED light sources, including at least one LED light source different from the LED light sources of the first plurality of	[26]	The method of claim 25, wherein the reshaping light further includes controlling at least one of the first plurality of LED light sources, or a second plurality of LED light sources, including at least one LED light source different from the LED light sources of the first plurality of LED light

	provide reshaped light.		LED light sources, to provide reshaped light.		sources, to provide reshaped light.
[5]	The system of claim 1, wherein the increase of light in the direction of the road curvature includes at least an increase of light emitted at a level below high-beam light and directed in the direction of the road curvature.	[16]	The storage medium of claim 12, wherein the increase of light in the direction of the road curvature includes at least an increase of light emitted at a level below high-beam light and directed in the direction of the road curvature.	[27]	The method of claim 23, wherein the increase of light in the direction associated with the shape change includes at least light output that increases light emitted at a level below high-beam light and directed in the direction associated with shape change.
[6.1]	The system of claim 1, wherein the instructions include instructions that, when executed by the one or more processors, enable the one or more processors to:	[17.1]	The storage medium of claim 12, wherein the instructions include instructions that, when executed by the one or more processors, enable the one or more processors to:	[28.1]	The method of claim 23, further comprising:
[6.2]	determine a second light change, the second change adapting the	[17.2]	determine a second light change, the second change adapting the	[28.2]	determining a second light output, the second output adapting the

	light pattern of the headlamps in at least one of color, intensity or spatial distribution to increase light in a direction of a second road curvature ahead of the motor vehicle, determined based on at least one of the first data or second data including at least second map data, and the second change shaping light based at least in part on the second road curvature; and		light pattern of the headlamps in at least one of color, intensity or spatial distribution to increase light in a direction of a second road curvature ahead of the motor vehicle, determined based on at least one of the first data or second data including at least second map data, and the second change shaping light based at least in part on the second road curvature; and		light pattern of the headlamps in at least one of color, intensity or spatial distribution to increase light in a direction associated with a second shape change ahead of the motor vehicle, determined based on at least one of the first data or second data including at least second map data, and the second output shaping light based at least in part on the second shape change; and
[6.3]	control at least a second plurality of the LED light sources, having at least one LED light source different from the first plurality of LED light sources, to provide light based at least in part on the determined	[17.3]	control at least a second plurality of the LED light sources, having at least one LED light source different from the first plurality of LED light sources, to provide light based at least in part on the determined	[28.3]	controlling at least a second plurality of the LED light sources, having at least one LED light source different from the first plurality of LED light sources, to provide light based at least in part on the

	second light change and prior to the motor vehicle reaching the second road curvature.		second light change and prior to the motor vehicle reaching the second road curvature.		determined second output and prior to the motor vehicle reaching the second shape change.
[7.1]	The system of claim 1, wherein the increase of light in the direction of the road curvature includes at least one of expansion of the light pattern in the direction of the road curvature or an increase to intensity of light directed in the direction of the road curvature; and	[18.1]	The storage medium of claim 12, wherein the increase of light in the direction of the road curvature includes at least one of expansion of the light pattern in the direction of the road curvature or an increase to intensity of light directed in the direction of the road curvature; and	[29.1]	The method of claim 23, wherein the increase of light in the direction associated with the shape change includes at least one of expansion of the light pattern in the direction associated with the shape change or an increase to intensity of light directed in the direction associated with the shape change; and
[7.2]	wherein the determination of the light change includes determination of light changes to individual LEDs of the first plurality of LED light sources, at least one of the	[18.2]	wherein the determination of the light change includes determination of light changes to individual LEDs of the first plurality of LED light sources, at least one of the	[29.2]	wherein the determining the light output includes determining output for individual LEDs of the first plurality of LED light sources, the output

	changes including at least one of:		changes including at least one of:		including providing light directed in the direction associated with the shape change from an LED not providing light directed in the direction associated with the shape change prior to the change.
[7.3]	a variation to at least one of intensity or color of individual LEDs of the first plurality of LED light sources, or	[18.3]	a variation to at least one of intensity or color of individual LEDs of the first plurality, or		*See* [29.2] (No corresponding element in claim 29)
[7.4]	providing light directed in the direction of the road curvature from an LED not providing light directed in the direction of the road curvature prior to the change.	[18.4]	providing light directed in the direction of the road curvature from an LED not providing light directed in the direction of the road curvature prior to the change.		*See* [29.2] (providing light directed in the direction associated with the shape change from an LED not providing light directed in the direction associated with the shape change prior to the change.)
[8.1]	The system of claim 1, further		*See* [19.2]		*See* [30.2]

	comprising one or more cameras positioned to capture data indicating at least one other vehicle ahead of the motor vehicle;		(captured by at least one camera of the motor vehicle)		(captured by at least one camera of the motor vehicle)
[8.2]	wherein the instructions include instructions that, when executed by the one or more processors, enable the one or more processors to:	[19.1]	The storage medium of claim 12, wherein the instructions include instructions that, when executed by the one or more processors, enable the one or more processors to:	[30.1]	The method of claim 23, further comprising: (*See* claim 23: a computer-implemented method)
[8.3]	determine a position associated with the at least one other vehicle based at least in part on second data captured by at least one of the one or more cameras; and	[19.2]	determine a position associated with at least one other vehicle based at least in part on second data indicating the at least one other vehicle and captured by at least one camera of the motor vehicle; and	[30.2]	determining a position associated with at least one other vehicle based at least in part on second data indicating the at least one other vehicle and captured by at least one camera of the motor vehicle; and
[8.4]	control, based at least in part on the position, a	[19.3]	control, based at least in part on the position, a	[30.3]	controlling, based at least in part on the

	second plurality of LED light sources providing light directed towards an area including at least a portion of the other vehicle to diminish glare to a driver of the other vehicle by a decrease to intensity of light directed towards and illuminating the area, the light that is directed towards and illuminating the area having lower intensity compared to light directed towards points laterally adjacent the area to either side.		second plurality of LED light sources providing light directed towards an area including at least a portion of the other vehicle to diminish glare to a driver of the other vehicle by a decrease to intensity of light directed towards and illuminating the area, the light that is directed towards and illuminating the area having lower intensity compared to light directed towards points laterally adjacent the area to either side.		position, a second plurality of LED light sources providing light directed towards an area including at least a portion of the other vehicle to diminish glare to a driver of the other vehicle by decreasing intensity of light directed towards and illuminating the area, the light directed towards and illuminating the area having lower intensity compared to light directed towards points laterally adjacent the area to either side.
[9.1]	The system of claim 8, wherein:	[20.1]	The storage medium of claim 19, wherein:	[31.1]	The method of claim 30, wherein:
[9.2]	the first plurality and second plurality of LED light sources include at least one common	[20.2]	the first plurality and second plurality of LED light sources include at least one common	[31.2]	the first plurality and second plurality of LED light sources include at least one common

	LED light source;		LED light source;		LED light source;
[9.3]	the control of the second plurality of LED light sources is based at least in part on third data received from a non-camera sensor of the motor vehicle;	[20.3]	the control of the second plurality of LED light source is based at least in part on third data received from a non-camera sensor of the motor vehicle;	[31.3]	the controlling the second plurality of LED light sources is based at least in part on third data received from a non-camera sensor of the motor vehicle;
[9.4]	the position includes at least one of:	[20.4]	the position includes at least one of:	[31.4]	the position includes at least one of:
	a distance associated with the at least one other vehicle,		a distance associated with the at least one other vehicle,		a distance associated with the at least one other vehicle,
	at least one elevation associated with the at least one other vehicle, or		at least one elevation associated with the at least one other vehicle, or		at least one elevation associated with the at least one other vehicle, or
	a position within image data captured by at least one of the cameras;		a position within image data captured by at least one of the cameras;		a position within image data captured by at least one of the cameras;
[9.5]	the first data includes data from a non-camera sensor of the motor vehicle;	[20.5]	the first data includes data from a non-camera sensor of the motor vehicle;	[31.5]	the first data includes data from a non-camera sensor of the motor vehicle;
[9.6]	either one of the control of the first plurality of	[20.6]	either one of the control of the first plurality of	[31.6]	either one of the determining the light output or

	LED light sources or control of the second plurality of LED light sources is subsequent to and accommodative of the other;		LED light sources or control of the second plurality of LED light sources is subsequent to and accommodative of the other;		controlling the second plurality of LED light sources is subsequent to and accommodative of the other;
[9.7]	the control of the second plurality of LED light sources additionally includes termination of light from at least one LED providing light directed to the area prior to the termination; and	[20.7]	the control of the second plurality of LED light sources additionally includes termination of light from at least one LED providing light directed to the area prior to the termination; and	[31.7]	the controlling the second plurality of LED light sources additionally includes terminating light from at least one LED providing light directed to the area prior to the terminating; and
[9.8]	the light pattern includes at least one of an illumination pattern or an emission pattern of the headlamps.	[20.8]	the light pattern includes at least one of an illumination pattern or an emission pattern of the headlamps.	[31.8]	the light pattern includes at least one of an illumination pattern or an emission pattern of the headlamps.
[10]	The system of claim 1, further including one or more optical control elements for controlling light from one or more of the	[21]	The storage medium of claim 19, wherein the instructions include instructions that, when executed by the one or	[32]	The method of claim 30, further comprising utilizing one or more optical control elements included in the motor vehicle to control light

	LED light sources.		more processors, enable the one or more processors to utilize one or more optical control elements included in the motor vehicle to control light from at least the first plurality or second plurality of the LED light sources.		from at least the first plurality or second plurality of the LED light sources.
[11]	The system of claim 10, wherein the optical control elements include at least one of one or more reflectors, refractors or lenses.	[22]	The storage medium of claim 21, wherein the optical control elements include at least one of one or more reflectors, refractors or lenses.	[33]	The method of claim 32, wherein the optical control elements include at least one of one or more reflectors, refractors or lenses.

D. Prosecution History Summary

69. The application that issued as the ’029 patent received a single Office Action, where claims 1-5, 12-16, and 23-27 were rejected under pre-AIA 35 U.S.C. § 103(a) as being unpatentable over Yamada in view of Nishitani (not

present in these grounds). EX1002, 188-197.[3] Applicant did not amend any claims in response, but argued that the applied references were not prior art. EX1002, 390. The Office did not comment further, mailing a Notice of Allowance quoting the majority of the independent claims as reasons for allowance. EX1002, 395-404.

E. Claim Construction

70. As above, I understand that during an *inter partes* review proceeding, claims are to be construed in light of the specification as would be read by a POSA at the time of the purported priority date.

71. It is my opinion that none of the claim terms require specific construction and should receive their plain and ordinary meaning in the context of the ’029 patent specification.

72. I do note, however, that the terms “map data,” “road curvature,” “shaping light,” “determine a light change,” “subsequent to and accommodative of,” and “determined light change,” are not found anywhere in the ’029 patent *except* for the claims. However, I have interpreted them according to their ordinary and customary meaning.

---

[3] Claims 6-11, 17-22, and 28-33 were indicated as allowable without substantive comment.

73. And, under any reasonable construction or interpretation, it is my opinion that the challenged claims are unpatentable for the grounds presented, as I describe in this declaration. Should Patent Owner introduce any proposed claim construction(s), I reserve the right to review and revisit my opinions presented here.

IX. SUMMARY OF THE APPLIED REFERENCES

A. U.S. Patent No. 6,144,158 to Beam

74. Beam discloses automotive adaptive anti-blinding headlights/headlamps ("AABH") that control at least the intensity or angular position (e.g., direction) of one or more narrow *microbeams* emanating from a *microbeam source*, such as from *individual, controllable, light-emitting diodes (LEDs)*. EX1005, Abstract, 8:4-17.

75. Beam uses the term "microbeam," as light emitted from a "microbeam source," which includes "*individual, controllable, light-emitting diodes*" (LEDs). So, for clarity, when I refer to Beam's system and its LEDs, a POSA would have understood that all instances of "microbeam" in Beam's disclosure correlate with "*individual, controllable, light-emitting diodes (LEDs)*." Relatedly, as Beam uses the term "source," a POSA would have understood that the term "source" may include not only the *emitter* but also may include lenses/optics/packaging, etc.

76. Beam's LEDs are therefore controllable in direction, pattern, intensity, etc.—all with the purpose of providing enhanced safety to the driver and others. EX1005, 3:8-44; 6:53-7:13. Because headlamps are critical safety features in the motor vehicle, the overarching purpose of providing enhanced safety to the driver and others (whether in other vehicles, or pedestrians, etc.) makes sense—any additional features or elements that improve safety would have been a focus of a POSA.

77. In one example, Beam's AABH system detects headlights of an oncoming vehicle and adjusts illumination of the headlight such that certain areas provide significantly reduced illumination to protect the vision of oncoming drivers. EX1005, 4:9-25. Beam's AABH system does this via an optical system 106, sensor 107 (e.g., camera), controller 108, and illuminator 109. EX1005, 4:9-25. Data from sensor 107 are input to controller 108, thereby controlling illuminator 109 to illuminate an area 101. EX1005, 4:9-25.

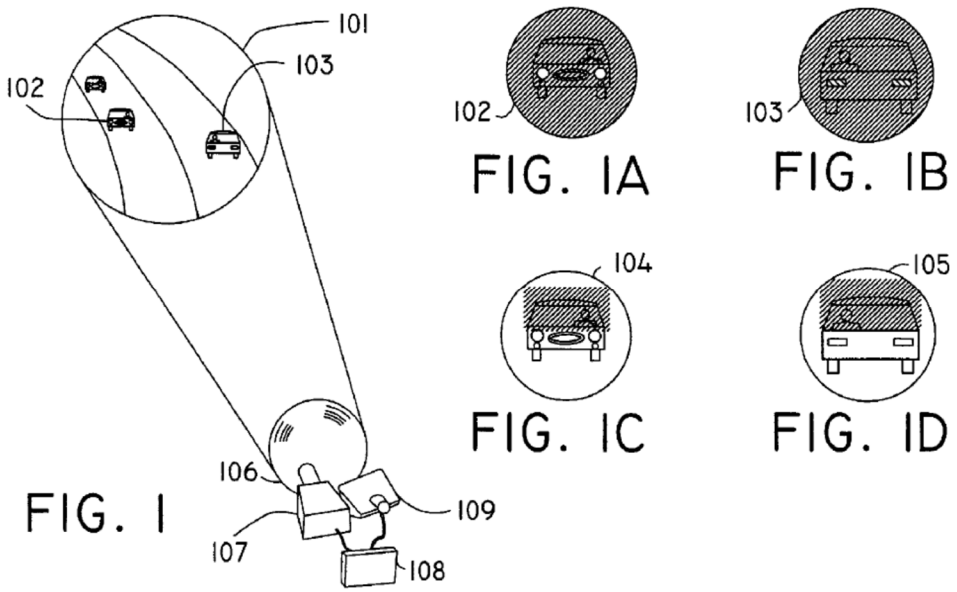

EX1005, FIGS. 1 and 1A-1D.

78. Significantly reduced illumination, represented by shaded dark areas, can thus be automatically provided to specific oncoming or leading vehicle areas 104, 105 to reduce blinding of drivers of oncoming vehicles 102 or leading vehicles 103 *while retaining high illumination for the driver* of the vehicle equipped with Beam's AABH system in unshaded areas. EX1005, 2:53-3:3, 4:9-59. Sensor 107 images the scene and controller 108 uses the sensor data to determine a particular area of LED microbeams to be reduced. EX1005, 4:26-59. Beam's LEDs are arranged in an X-Y matrix and the intensity and angular position of each LED is independently controlled by controller 108. EX1005, 4:26-59. Beam's controller 108 thus uses the data from the camera to (1) determine the position of the vehicle, and (2) control the LEDs to diminish glare to the other driver. Beam explains:

> *When an oncoming vehicle's headlights are detected* (whether or not it is equipped with the AABH system), *an area slightly wider than the headlight spacing and approximately six feet high, and whose bottom edge is centered on the oncoming headlights, is dimmed in the beam-bundle of the vehicle equipped with the AABH system*. As the positions of both vehicles move, the *blanked area tracks the location of the oncoming vehicle, dynamically varying in position and in size*. EX1005, 6:24-27, 5:46-54; *see also* EX1005, 2:59-3:3, 4:9-25.

And in the example with reference to Figures 2 and 5, controller 108 selectively commands reduction of illumination of microbeams falling on a particular object or objects, which commands spatial light modulator 203 in illuminator 109 to either divert or attenuate the selected microbeams. EX1005, 5:46-54; *see also* EX1005, 2:59-3:3, 4:9-25; *see also* EX1005, 8:4-17 (explaining that the microbeams may be from LEDs).

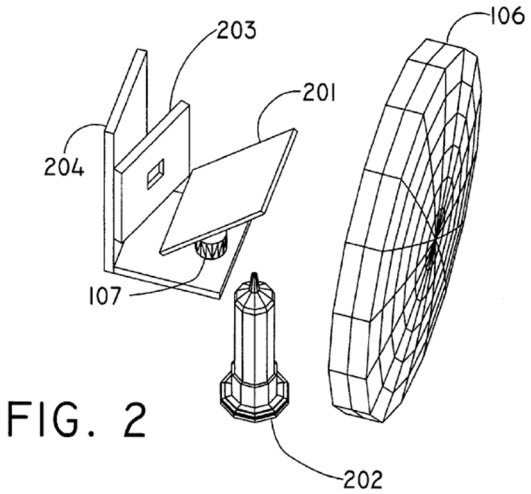

EX1005, FIG. 2.

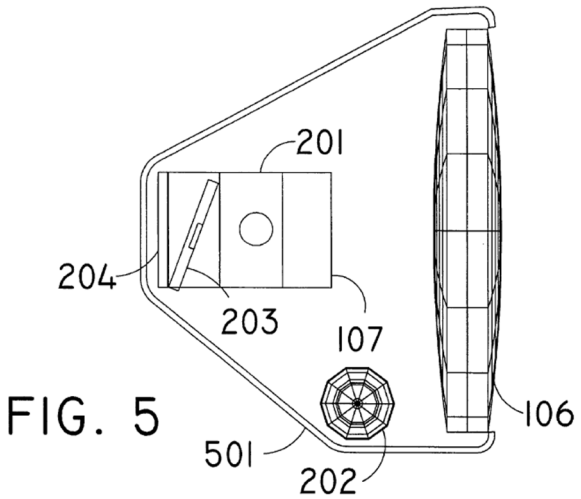

EX1005, FIG. 5.

B. U.S. Patent No. 6,049,749 to Kobayashi

79. Kobayashi discloses a motor vehicle system (e.g., lighting device) that controls shaping of light (e.g., changing an "irradiating" or "illumination" direction, range, shape, etc.) based at least in part on map data/information, including GPS data and navigation beacon data. *See* EX1008, Abstract, 1:10-63.

80. Kobayashi's ECU 10 receives input "from GPS navigation device 29, steering sensor 13, vehicle speed sensor 14, direction indicating switch 15, and automatic control changeover switch 16." EX1008, 17:8-15; *see also* EX1008, FIGS. 1, 6, 10:1-11:4. "GPS navigation device 29 corresponding to the road profile calculating means 2 includes: GPS receiving section 32, gyrosensor 33, calculating section 34, guide route setting section 35, map information output section 36, and display section 37." EX1008, 17:16-20.

FIG. 12

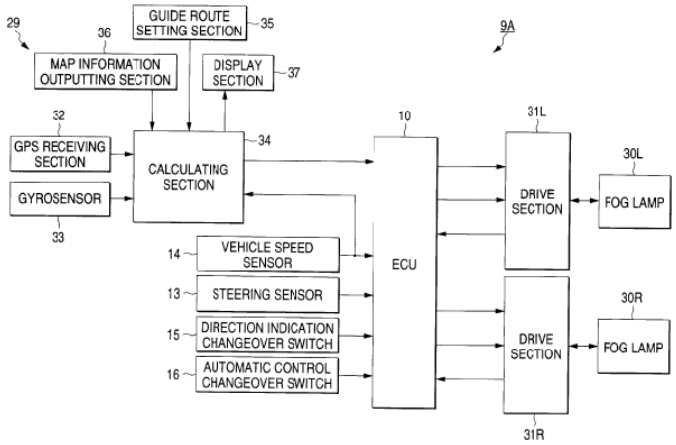

EX1008, FIG. 12.

FIG. 1

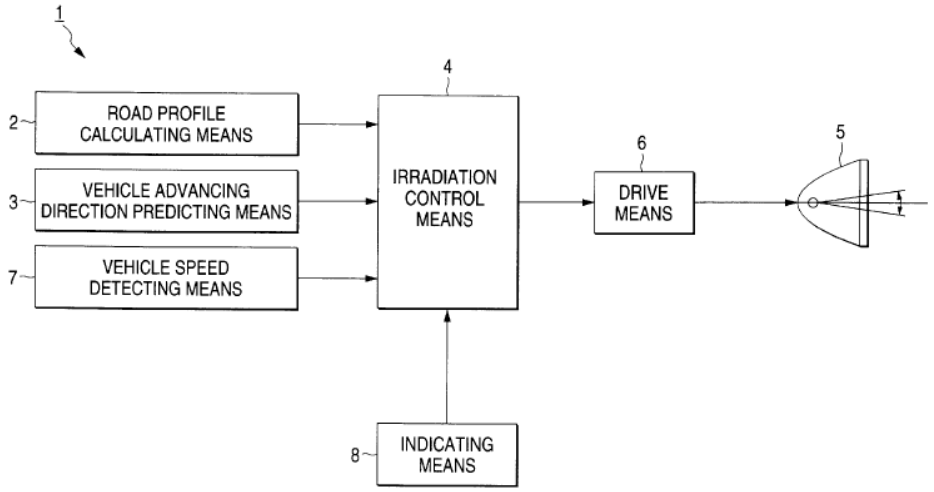

EX1008, FIG. 1.

FIG. 6

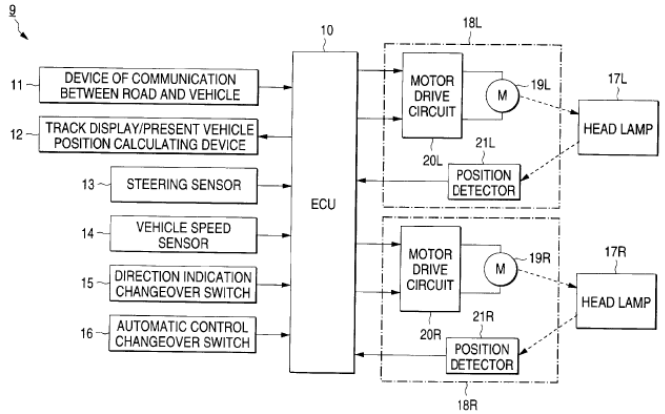

EX1008, FIG. 12.

81. GPS navigation device 29 sends information about the road profile and the present vehicle position to ECU 10. EX1008, 17:39-40. In turn, output signals of ECU 10 are sent to drive sections 31L, 31R of the fog lamps 30L, 30R (which are head lamps) that are arranged at the left and right front portion of the vehicle,

respectively. EX1008, 17:39-40; FIG. 1, 6, 12, 3:9-20. ECU 10 processes information in Figure 12 in substantially the same way as that of Kobayashi's Figure 9 example. *See* EX1008, 11:34-14:52, including representative lookup tables; *see also* EX1008, 17:41-50, FIG. 9.

FIG. 9

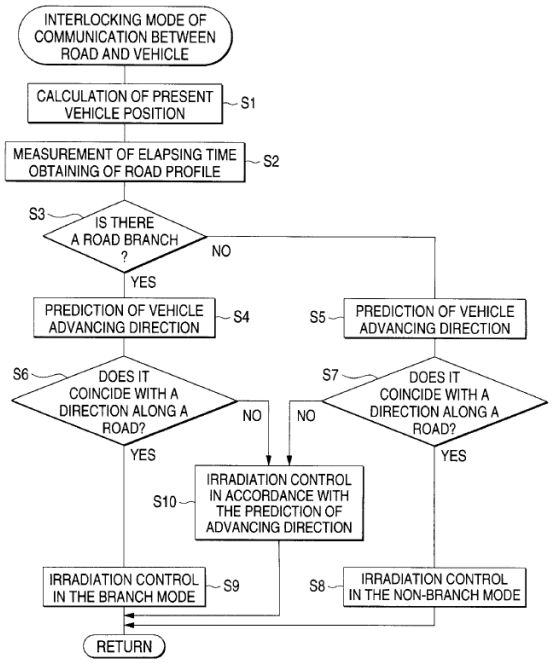

EX1008, FIG. 9.

82. Figure 12 uses map data (e.g., by GPS navigation device 29) as the method of obtaining information, to implement the more general system diagram in FIG. 1. EX1008, 17:44-50. And a scheduled course of the vehicle which is set by the guide route setting section 35 is fed to the prediction of the vehicle advancing direction in steps S4 and S5. EX1008, 17:44-50.

83. Kobayashi's road profile calculating means 2 (using map data such as GPS data) and vehicle advancing direction predicting means 3 cooperate with control means 4 to alter the direction/shape/intensity of headlamp 5. EX1008, 3:9-50, FIG. 1. Kobayashi discloses whole or partial directional control, including via portions of the lighting device or plurality of components composing the lighting device, e.g., reflecting mirrors, plurality of lighting devices, etc. *See generally* EX1008, 6:4-62.

84. Kobayashi's system responds to real-world conditions—multiple curves, intersections, etc. As an example, Figure 10 shows that the illumination control (including shaping/reshaping light and directionality) of vehicle K can be planned and controlled on curved roads r1 and R1 with the driver's line of sight to improve safety. For example, when vehicle K turns to the left (point A), the left shoulder is illuminated (the shape is adjusted towards the left shoulder), and when vehicle K turns to the right on a subsequent curve (point C), the right shoulder is illuminated (the light is reshaped towards the right shoulder). EX1008, 14:53-15:28. While Figure 10 is described in more detail relating to beacons 27 and 28, the GPS and other map data are also accounted for in ECU 10. *See also* EX1008, FIG. 12, 17:3-18:67. Moreover, a POSA would have understood that the beacons 27 and 28 also convey map data, e.g., as road profile information.

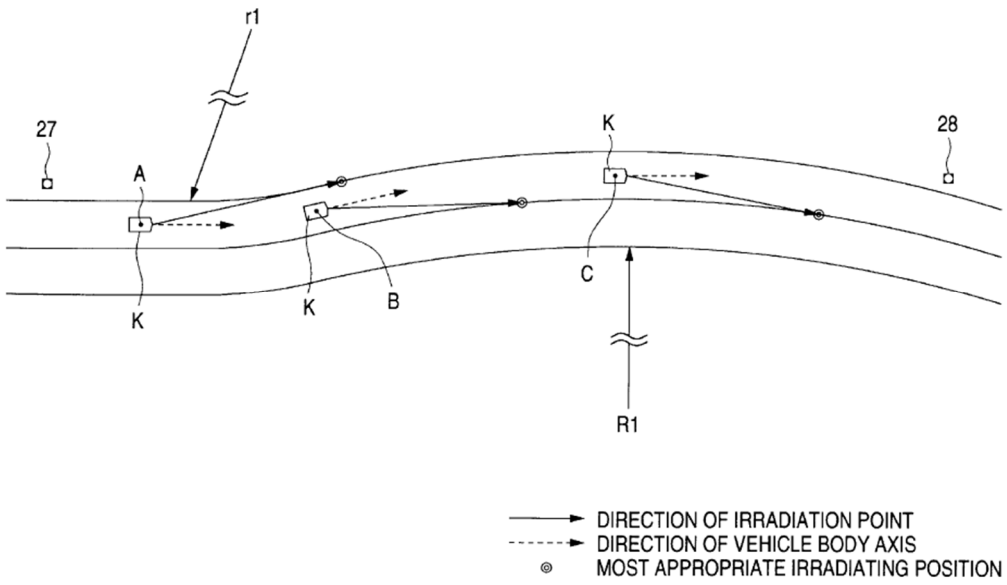

EX1008, FIG. 10.

C. U.S. Patent No. 5,588,733 to Gotou

85. Gotou's automotive headlamp device can be adjusted in rightward and leftward directions, thereby adjusting lighting region in front of the vehicle in a travelling direction (such as around a curve), based on map data from a GPS system. EX1012, Abstract, 1:6-47, 1:51-59, 3:24-4:49, 8:9-41. Gotou compares systems using steering wheel-based directional control (EX1012, 1:21-29) with navigation system control (EX1012, 1:30-40), including the observation that when "a *curved part* or the like is *foreseen in advance in reference to both map information of the navigation system* and information of the proper or subject vehicle position on the map, and the *lighting region* is changed *before* entering the *curved part*." EX1012, Abstract, 1:6-47, 1:51-59, 3:24-4:49, 8:9-41.

86. Gotou's ECU 10 controls its motor 8, adjusting the position of the headlight 2 in view of the map data. EX1012, 3:24-47, FIG. 2.

FIG. 2

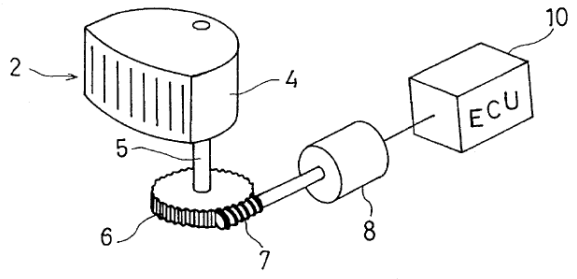

EX1012, FIG. 2.

87. Gotou's right and left headlights are generally concurrently swung in the same direction to shape and reshape light, but Gotou also provides for independent movement, as well as (1) using a plurality of light sources in each headlight and changing the light distribution by separately using one or more sources for illumination and (2) using one or more sub-reflectors to move and change the light distribution. EX1012, 8:9-22.

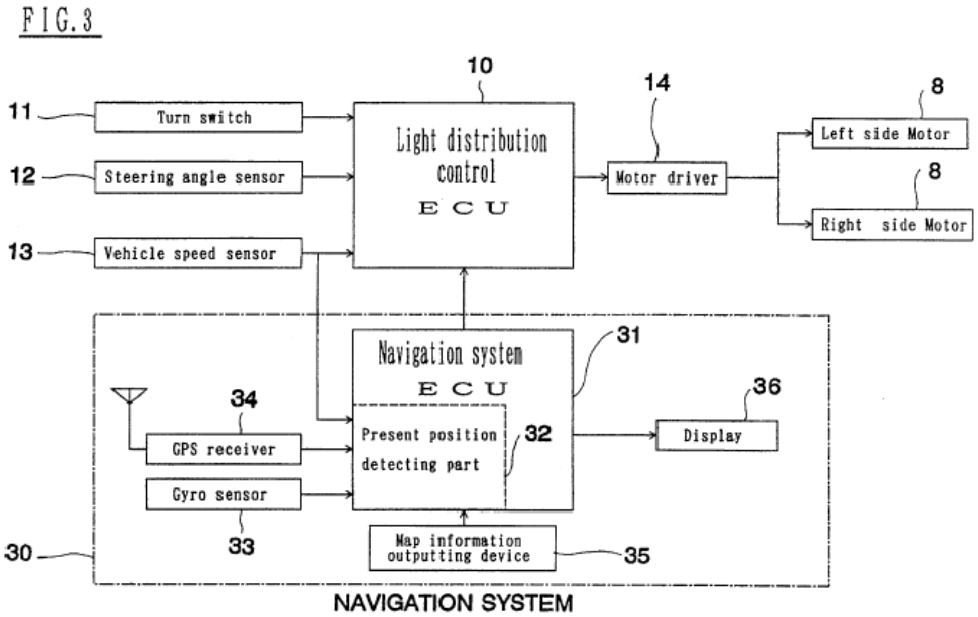

EX1012, FIG. 3.

88. As shown above, navigation system 30 communicates with light distributing control ECU 10, sending map data. EX1012, 3:52-62. ECU 10 controls the shaping of the lights from the headlamps. EX1012, 3:52-62. Gotou provides additional details of the navigation system 30, including the GPS receiver 34. EX1012, 4:1-29.

89. Additional inputs, such as turn switch 11, steering angle sensor 12, vehicle speed sensor 13, etc., are all inputs into the light distribution control ECU 10. *See* EX1012, 4:1-29. In operation, ECU 10 processes the information and signals to determine a requisite optical axis angle θ, and an indicating signal is outputted to motor driver 14 so as to achieve the optical axis angle θ, as shown in Figure 4. EX1012, 3:62-67.

FIG. 4

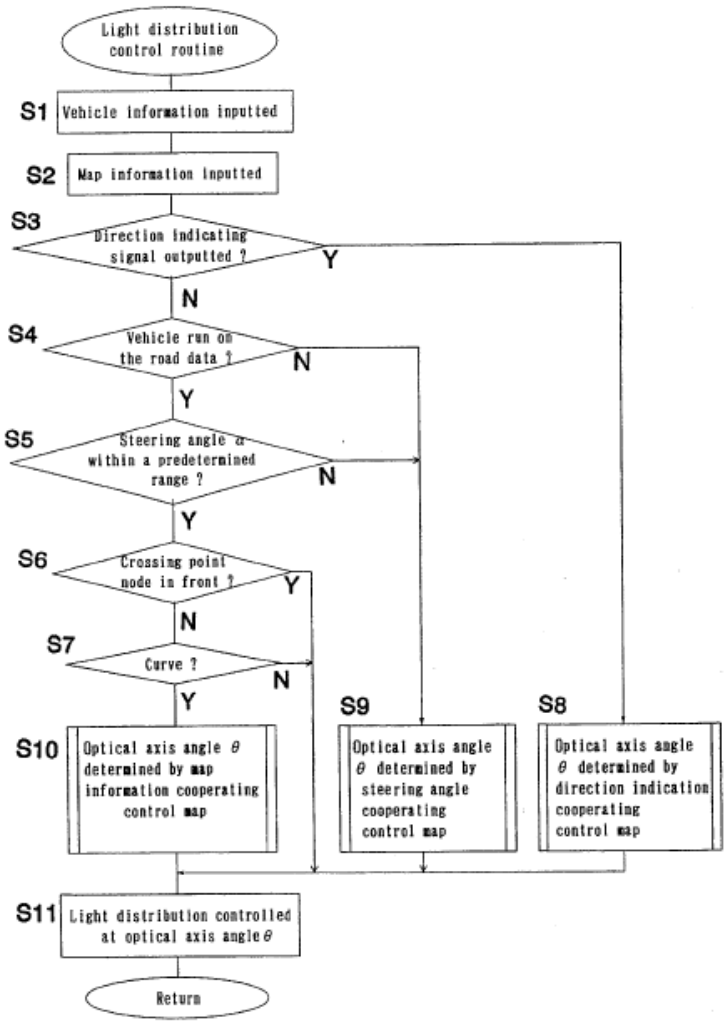

EX1012, FIG. 4.

90. At S2, map data is input (such as information stored as crossing points, directions of curves or degrees of sharpness of curves). EX1012, 4:36-40. At S3-S6, determinations are made as to whether there are other considerations for the system to account for, such as a turn signal being on (S3), whether the steering angle is within a predetermined range (S5), etc. *See* EX1012, 5:8-6:3. At S7, the

system determines whether or not a curve is present. EX1012, 6:18-27. If there is, the optical axis angle is adjusted via the map. *See* EX1012, 6:28-7:4.

91. Gotou's Figures 8 and 9 show the effect of this adjustment—Figure 8 shows a lighting region on a straight road (as viewed from above, showing lighting regions 3 generally straight ahead of the vehicle 1), and Figure 9 shows a lighting region around a curved road (as viewed from above, showing lighting regions 3 shaped to the left, ahead of the curved portion of the road ahead of the vehicle 1):

FIG. 8

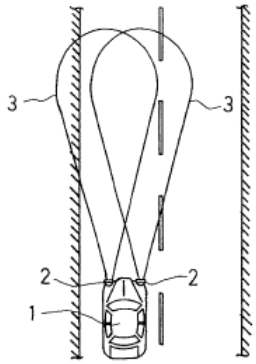

EX1012, FIG. 8.

FIG. 9

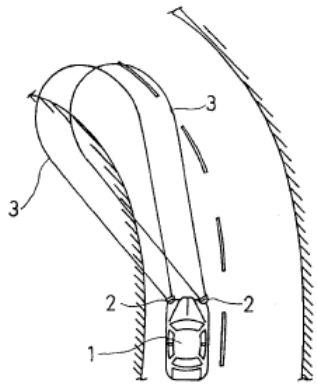

EX1012, FIG. 9.

D. WO 1998/054030 to Karlsson

92. Karlsson's automotive headlights (thus headlamps) include LEDs that are automatically controlled in direction and/or intensity. In an example, sensors detect oncoming traffic and a lighting pattern of the LEDs is automatically changed to reduce blinding of oncoming traffic. EX1010, Abstract. Karlsson's lighting device automatically varies an LED pattern in an efficient manner and

with maximum sensitivity in response to control signals delivered by light-sensitive sensors. EX1010, 2:30-35[4], FIG. 3.

93. The spotlight beams (from LEDs) are controlled such that patterns of the emitted light beam are automatic and responsive to inputs. EX1010, 13:24-14:4. Switching one or more LEDs on or off or adjusting the intensity of the light emitted provides a desired pattern and intensity. EX1010, 13:24-14:4; *see also* EX1010, FIG. 3. Karlsson's spotlight beams 34 can be provided by a light source 2 composed of a grid of separate LEDs, which can be controlled individually or in groups. EX1010, 13:24-14:4; *see also* EX1010, FIG. 3. The headlight includes a spatial distribution of LEDs (D, I, and D/I) and spotlight sensors S. EX1010, 19:18-20:3, FIGS. 6 and 14. The resulting emitted light beam 50 is represented as a window that can shift in the plane from left to right and from top to bottom and produced by LEDs based on the data from inputs, e.g., data sensed from spotlight sensors S. EX1010, 19:18-20:3, FIGS. 6 and 14.

[4] In this declaration, for Karlsson, I use page:line citation format.

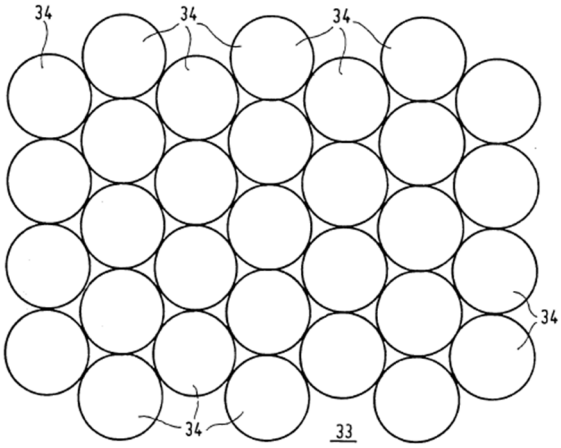

FIG. 6

EX1010, FIG. 6.

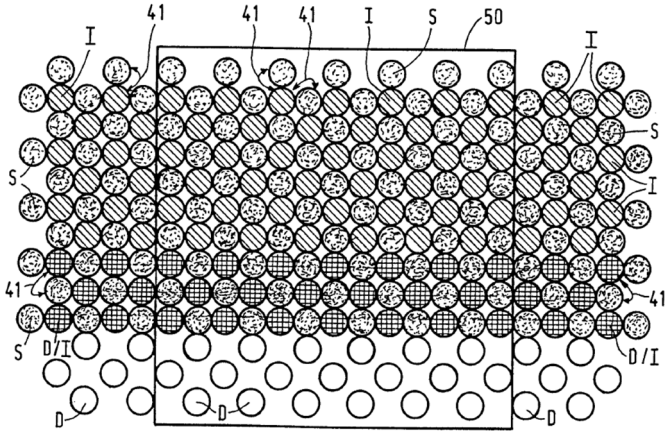

FIG. 14

EX1010, FIG. 14.

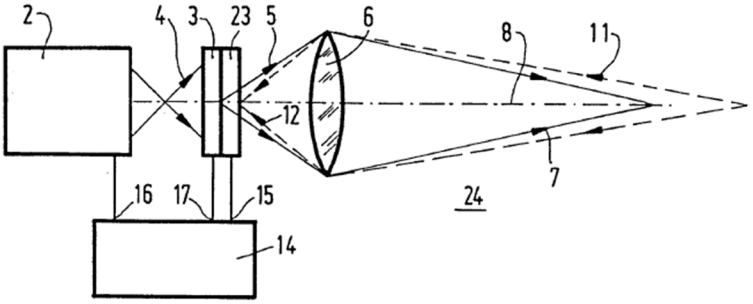

FIG. 3

EX1010, FIG. 3.

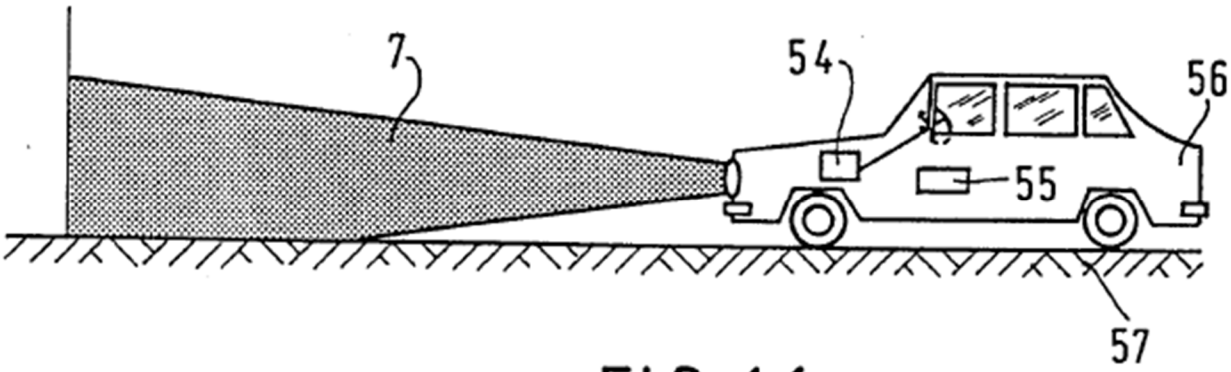

FIG. 16

EX1010, FIG. 16.

X. GROUND 1: THE COMBINATION OF BEAM AND KOBAYASHI RENDERS OBVIOUS CLAIMS 1-33.

A. Independent claims 1, 12, and 23

94. Independent claims 1, 12, and 23 are substantively similar and it is my opinion that each of their collective claim language is rendered obvious based on the same prior art disclosures and rationales. *See* above, in the claim chart in Section VIII.B.

95. For completeness, I have identified below phrases that vary slightly between the independent claim elements:

- Independent claim elements [1.4] and [12.4] (*see* Table 1) recite "a road curvature upcoming along a road on which the motor vehicle is traveling." Independent claim element [23.4] (*see* Table 1) varies slightly, and recites "an upcoming shape change of a road ahead of the motor vehicle." But "a road curvature upcoming along a road," is a type of "upcoming shape change." Thus, there is no patentable difference between these limitations, and the same prior art references are applied to these limitations as provided in the analysis below.

- Independent claim elements [1.4] and [12.4] (*see* Table 1) recite that one or more processors "receive first data, including at least map data, indicating a road curvature upcoming along a road on which the motor vehicle is traveling." Independent claim element [23.4] (*see* Table 1) varies slightly, and recites "determining an upcoming shape change of a road, ahead of the motor vehicle,

based on first data, including map data, indicating the shape change." The data including at least map data received in claims 1 and 12 indicates a road curvature, and the verb in claim 23 *determines* an upcoming shape change (which may be a curve) based on data including map data. Thus, there is no patentable difference between these limitations, and the same prior art references are applied to these limitations as provided in the analysis below.

- Independent claim elements [1.5] and [12.5] (*see* Table 1) recite "determine a light change, the change adapting a light pattern of the headlamps." Independent claim element [23.5] (*see* Table 1) varies slightly, and recites the verb "determining a light output, the output adapting a light pattern of the headlamps." But a *determined* "light change" subsumes the *determining* of a "light output," and the adapting of a light pattern of headlamps in both claims indicates that there is no patentable difference between these limitations, and the same prior art references are applied to these limitations as provided in the analysis below.

- Independent claim elements [1.5] and [12.5] (*see* Table 1) recite that one or more processors "determine a light change, the change adapting a light pattern of the headlamps in at least one of color, intensity or spatial distribution to increase light in a direction of the road curvature ahead of the motor vehicle and shaping light based at least in part on the road curvature." Independent claim element [23.5] (*see* Table 1) varies slightly, and recites "determining a light output,

the output adapting a light pattern of the headlamps in at least one of color, intensity or spatial distribution to increase light in a direction associated with the shape change ahead of the motor vehicle and shaping light based on the shape change." As with elements discussed above, that independent claims 1 and 12 recite a type of shape change ("road curvature"), the determination of a light change or light output does not patentably change the claim. Thus, there is no patentable difference between these limitations, and the same prior art references are applied to these limitations as provided in the analysis below.

- Independent claim elements [1.6] and [12.6] (*see* Table 1) recite that one or more processors "control at least a first plurality of the LED light sources to provide light based at least in part on the determined light change and prior to the motor vehicle reaching the road curvature." Independent claim element [23.6] (*see* Table 1) varies slightly, and recites "prior to reaching the road shape change, causing at least a first plurality of the LED light sources to provide light based at least in part on the determined light output." Again, as with elements discussed above, that independent claims 1 and 12 recite a type of shape change ("road curvature"), the determination of a light change or light output does not patentably change the claim. Thus, there is no patentenable difference between these limitations, and the same prior art references are applied to these limitations as provided in the analysis below.

1. A POSA would have been motivated to combine Beam and Kobayashi with a reasonable expectation of success.

96. A POSA would have been motivated to modify Beam's adaptive anti-blinding *headlamp* system to use known *map data* functions, as implemented by Kobayashi's ECU 10, to further *control* Beam's *directional LEDs*, thereby improving driver safety—an express purpose of Beam's AABH system. *See*, *e.g.*, EX1005, 3:8-44, 5:33-54, 6:53-7:13.

97. *First*, a POSA would have understood that including an additional source of input data for Beam's controller 108, namely from the *known technique* using *map data* as in Kobayashi, would have enhanced Beam's AABH system by increasing or directing illumination *based on the road curvature*, thereby improving road safety (including driver and non-driver, e.g., pedestrian safety), along with driver's comfort, and providing light to where it is needed for the vehicle driver. Such map data input benefits were well known for use in vehicle headlamps. *See*, *e.g.*, EX1023, 525 ("The introduction of data coming from accurate navigation systems comes as a first logical consequence. This predictive system would make possible to anticipate the needed light distribution avoiding dangerous changes in the beam during critical driving conditions such as curves and crossing."); EX1025, 186 ("The newly developed moveable headlamps are controlled by path prediction based on the vehicle's dynamics and navigation data ."). *Second*, a POSA would have incorporated the *known components* of

Kobayashi's road profile calculating means 2 and vehicle advancing direction predicting means 3 (e.g., including GPS navigation device 29 as described in EX1008, Abstract, 1:10-35, 4:60-64 and Figures 1, 10, 12) into Beam's AABH system (e.g., into sensor 107 and controller 108). Kobayashi's techniques of means 2 and means 3 are examples of practical execution of the Beam's discussion of "Data from sensor 107 are input to controller 108, thereby controlling illuminator 109 to illuminate an area 101." EX1005, 4:11-19. Kobayashi demonstrates that the GPS navigation devices are built to be connected with means 2 (EX1008, 17:16-32), and which can synthetically predict a vehicle advancing direction at which the driver aims by means 3 (EX1008, 4:7-8). Doing so would have provided *road curvature* data of Beam's detected scene 101, allowing Beam's AABH system to increase illumination in a direction of the *road curvature in advance of the curve* like Kobayashi, thereby further improving safety.

98. Beam and Kobayashi's systems are from the same field of motor vehicle headlamps (headlights), and include the same building blocks. Both disclose controllable (adaptive) headlamps with dynamic illumination to provide the most appropriate light, in the right direction and right area. And both include, for example, components such as controllable headlamps, input sensors, and one or more controllers, processors, and memory to execute commands and control the direction, shape, and/or intensity of light output emanating from the headlamps.

99. For clarity, a POSA would have understood that processors in this field indeed generally include memory, such as with ECUs, and that such common controller and ECU components were well known. *See*, *e.g.*, EX1034, FIG. 2, 1:24-38 (describing ECUs controlling a headlamp turning-on operation in response to certain control inputs), 14:7-51 (describing ECU 12i shown in FIG. 2 including input/output interface 58i, CPU (processor) and three types of memory (RAM, ROM, and E^2PROM):

F I G. 2

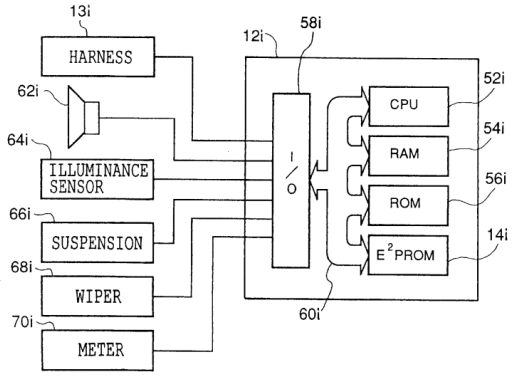

EX1034, FIG. 2.

100. Beam and Kobayashi's controllers/ECUs are shown below for illustrating the similarity:

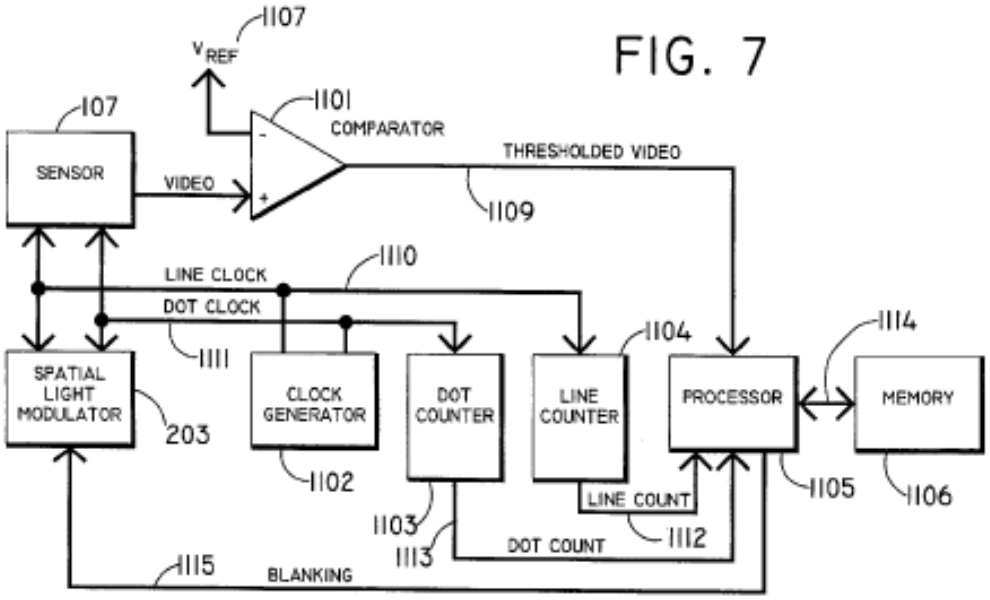
FIG. 7
1107
V_{REF}
1101
COMPARATOR
107
SENSOR
VIDEO
THRESHOLDED VIDEO
1109
1110
LINE CLOCK
DOT CLOCK
1111
1104
1114
SPATIAL LIGHT MODULATOR
203
CLOCK GENERATOR
DOT COUNTER
LINE COUNTER
PROCESSOR
MEMORY
1102
1105
1106
LINE COUNT
1103
1113
DOT COUNT
1112
1115
BLANKING

EX1005, FIG. 7.

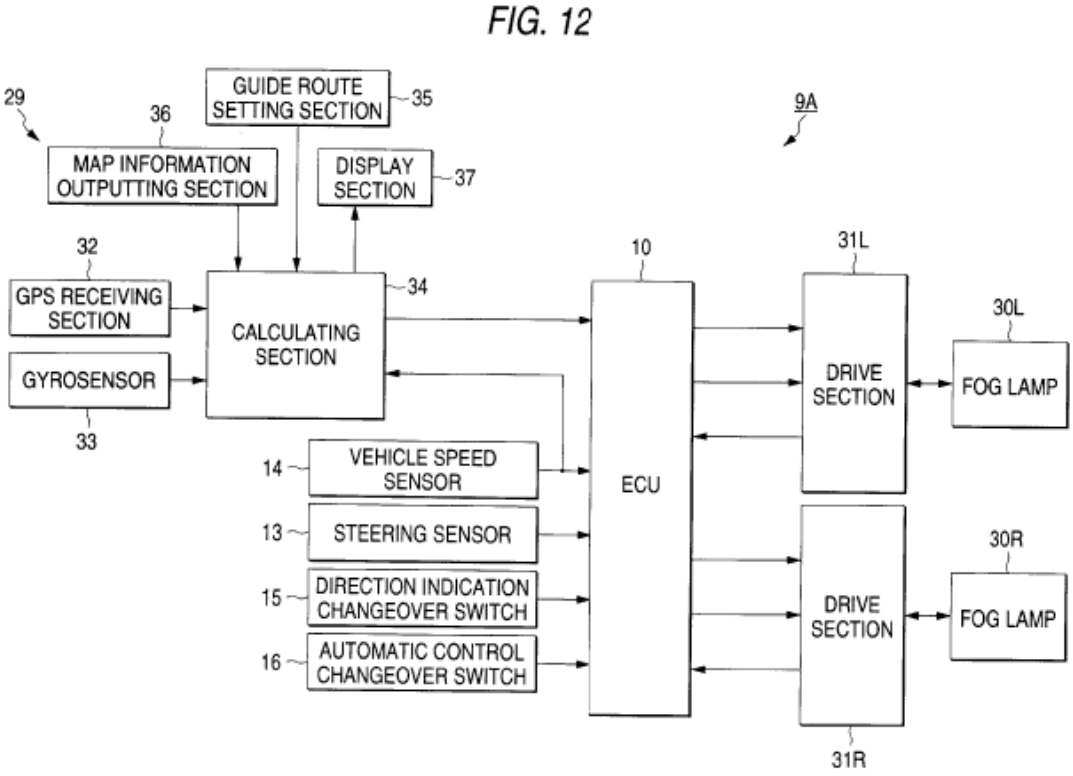
FIG. 12
29
36
GUIDE ROUTE SETTING SECTION
35
9A
MAP INFORMATION OUTPUTTING SECTION
DISPLAY SECTION
37
32
GPS RECEIVING SECTION
CALCULATING SECTION
34
10
31L
30L
GYROSENSOR
33
DRIVE SECTION
FOG LAMP
14
VEHICLE SPEED SENSOR
ECU
13
STEERING SENSOR
30R
15
DIRECTION INDICATION CHANGEOVER SWITCH
DRIVE SECTION
FOG LAMP
16
AUTOMATIC CONTROL CHANGEOVER SWITCH
31R

EX1008, FIG. 12.

101. Moreover, driver safety is paramount in both Beam's and Kobayashi's systems—for both the driver of the vehicle equipped with the adaptive headlamp system and others on the road. *See*, *e.g.*, EX1005, 3:8-44, 5:33-54, 6:53-7:13; EX1008, 15:6-28.

102. More specifically, Beam's *techniques* and system of controlling individual LEDs emphasizes safety of the vehicle's driver and other drivers. EX1005, 3:8-44; 6:53-7:13. Beam recognizes that controllable headlamps "provide greatly improved safety and comfort to the motoring public," and that providing a "brighter headlight beam while simultaneously protecting the drivers of all vehicles ahead," increases safety. EX1005, 3:8-44. Beam's AAHB enables "the driver to see more clearly at night," while protecting other drivers from glare. EX1005, 3:8-44.

103. Beam's controller 108 uses input data from sensor 107 to determine which LEDs to adjust the light protections to other vehicle drivers on the road, while maintaining appropriate forward lighting. EX1005, 4:16-19. The system "*determine[s] the location of light sources* forward of the apparatus and us[es] that information to *control the intensity, and/or the angular position*, of one or more" LEDs. *See* EX1005, Abstract. Such control is "*dynamically varying* in position and in size," in response to the control input. EX1005, 5:46-54.

104. Beam also recognizes prior systems that control headlamps in response to changes in the vehicle's position (e.g., tilt on a hill) and steering mechanism (e.g., along a curve) and acknowledges those systems' safety benefits—while noting that more active systems decrease the compromise between "reducing glare and providing enough light to the driver for adequate visibility." *See* EX1005, 2:1-6, 2:15-22. Indeed, Beam notes that "[o]ne of the problems exhibited by existing headlights lies in the fact that the headlight operates in only one of two modes, either as a 'high beam' or as a 'low beam.'" EX1005, 1:20-34.

105. Beam does not specifically disclose using map data, such as from GPS or navigation beacons, as an input to control the intensity and/or angular position of the LEDs (or their resultant beam) of its system, but it would have been obvious to a POSA to do so. This would have made Beam's system even more active and sophisticated than prior systems, as Beam seeks to do (*see* EX1005, 2:15-22), and further achieves Beam's purpose of improving driver safety. EX1005, 3:8-44; 6:53-7:13. Kobayashi provides additional active and sophisticated techniques, specifically map data-based control.

106. Kobayashi's *techniques and system components*, like Beam, seek to enhance driver safety—using *map data*-based control to do so. EX1008, 15:6-28. Specifically, Kobayashi explains that controlling the shape of the light to correspond with the driver's changing line of sight (ahead of a curve on a *curved*

road) enhances safety. EX1008, 15:6-28. Kobayashi's road profile calculating means 2 and vehicle advancing direction predicting means 3 are inputs to control means 4, which alters the direction of light from headlamp 5 in response to *map data* input, thus directing light where it is most needed at a given time. EX1008, 3:9-50, FIG. 1. Kobayashi discloses whole or partial directional control, including via portions of the lighting device or components composing the lighting device, e.g., reflecting mirrors, plurality of lighting devices, etc. *See generally* EX1008, 6:4-62. Kobayashi's system responds to real-world conditions, multiple curves, intersections, etc. (*see* EX1008, 11:34-14:52), including representative lookup tables (*see also* EX1008, 17:41-50).

107. As an example, Kobayashi's Figure 10 shows that the illumination control (including shaping/reshaping light and directionality) of vehicle K can be planned and controlled on roads with multiple curves, r1, R1, etc. For example, when vehicle K turns to the left (point A), the left shoulder is illuminated (the shape is adjusted towards the left shoulder). Likewise, when vehicle K turns to the right on a subsequent curve (point C), the right shoulder is illuminated (the light is reshaped towards the right shoulder). EX1008, 14:53-15:28; *see also* EX1008, FIG. 12, 17:3-18:67.

108. It is my opinion, therefore, that a POSA would have understood that including an additional source of input data for Beam's controller 108, namely map

data as in Kobayashi, would have enhanced Beam's AABH system by increasing illumination based on the road curvature (and directing light to needed areas), thereby improving driver safety. Doing so would have merely been applying Kobayashi's known technique (using map data from Kobayashi's GPS to shape and re-shape light and/or adjust intensity) to Beam's similar, known device (dynamic AAHB system that directs light to needed areas), in the same way. Kobayashi's known technique of utilizing map data to control light shape and/or intensity around curves is fully described along with its benefits (e.g., improved safety), such that a skilled artisan would have readily applied it to similar systems, such as Beam's AABH system, in the same way.

109. Indeed, such GPS/navigation map data control inputs were shown to be advantageous and well known. As described in Section VIII.A, headlamps were known to be "controlled by path prediction based on a vehicle's dynamics and navigation data." EX1025, 186. Kobayashi explained further in a separate publication that vehicle sensors, with the addition of data, such as map data, from GPS navigation systems gave additional advantages by providing more accurate information on driving regions. EX1026, 461-462 ("To obtain more accurate information on driving regions, it is advantageous to use data from a GPS navigation system."). *See also* EX1024, 815-816. And as I have previously described, the increased accuracy of navigation systems at that time made it

possible to anticipate the light distribution needed during critical driving conditions, such as curves and crossings—this principle was well known. EX1023, 525 ("This predictive system would make possible to anticipate the needed light distribution avoiding dangerous changes in the beam during critical driving conditions such as curves and crossing."); EX1027, Abstract.

110. Additionally, a POSA would have recognized that such a modification would have been nothing more than combining *known prior art elements* (e.g., Beam's adaptive, directional-controllable LED headlamps with Kobayashi's directional control based on map data via road profile calculating means 2 and vehicle advancing direction predicting means 3 (e.g., including GPS navigation device 29) according to *known methods* (disclosed in Kobayashi) to yield *predictable results* (e.g., improving safety for the vehicle equipped with the adaptive lighting system and other vehicles on the road, better directional control of the lighting where it is needed at a given time, preemptive control *before* the vehicle enters a *curve*, etc.).

111. A POSA would have had a reasonable expectation of success combining Beam and Kobayashi. Indeed, a POSA would have understood *how* to combine the teachings of Beam and Kobayashi, for example, by simply modifying the software instructions stored in the memory of Beam's controller/processor (e.g., ECU) to adjust and direct light of the LEDs appropriately in view of

Kobayashi's map data. A POSA would also have found it straightforward to combine Kobayashi's road profile calculating means 2 and vehicle advancing direction predicting means 3 (e.g., including GPS navigation device 29) with Beam's system.

112. Such modifications would have been routine and well within the skill of a POSA due to the similarities in Beam's and Kobayashi's adaptive light control systems and methods—all of the common components of both Beam's and Kobayashi's system were well known and there would have been no limitations for a POSA to make such modification. Indeed, both Beam and Kobayashi describe several different control inputs—a POSA would have understood that adding an additional control input would have been a routine, simple programming and system integration exercise. Indeed, processors or ECUs such as in Beam's and Kobayashi's system are readily reprogrammed, designed for additional inputs, etc. This type of programming and sensor addition was common by the earliest possible priority date of the '029 patent. *See* EX1034.

113. As I have explained, in applying Kobayashi's technique to Beam, a POSA would have simply been applying a known technique in a predictable way—namely, *controlling LED headlamps/headlights in part based on map data*—in the same way as already disclosed in the art. And in combining Beam's system with Kobayashi's road profile calculating means 2 and vehicle advancing

direction predicting means 3 (e.g., simply revising control input/output on an ECU), a POSA would have simply been combining known elements according to known methods (disclosed in Kobayashi) to yield predictable results (additional light control for improving safety for the vehicle equipped with the adaptive lighting system and other vehicles on the road).

114. My experience at Toyota Motor Corporation working on vehicle trajectory prediction using vehicle sensors, map databases and GPS to control headlights and to preemptively alert the driver about excessive speed when approaching curves, supports these positions.

115. Now that I have provided a detailed overview of why it would have been obvious to combine Beam and Kobayashi, I address each of the claim elements and specific disclosures in the references that show such obviousness.

2. [1.P]: "A system, for a motor vehicle, comprising:"

[12.P]: "A non-transitory computer-readable storage medium, storing instructions that, when executed by one or more processors of a motor vehicle that includes a plurality of headlamps that each comprise a plurality of LED light sources, enable the one or more processors to:"

[23.P]: "A computer-implemented method for adapting light from headlamps of a motor vehicle to accommodate road shape changes, the headlamps including a plurality of LED light sources, comprising:"

116. Beam discloses a system for a motor vehicle. Beam's adaptive anti-blinding headlight (AABH) system adjusts illumination of vehicle headlights of a vehicle to provide significantly reduced illumination in certain areas to protect the vision of other drivers. EX1005, Abstract, 1:5-18, 2:53-3:3, 3:8-24, 4:9-59, 5:33-54, 5:61-6:4, 6:9-27, 6:40-50. Data from Beam's sensor 107 are input to the controller 108 to control the illuminator 109 and illuminate an area 101. EX1005, Abstract, 1:5-18, 2:53-3:3, 3:8-24, 4:9-59, 5:33-54, 5:61-6:4, 6:9-27, 6:40-50.

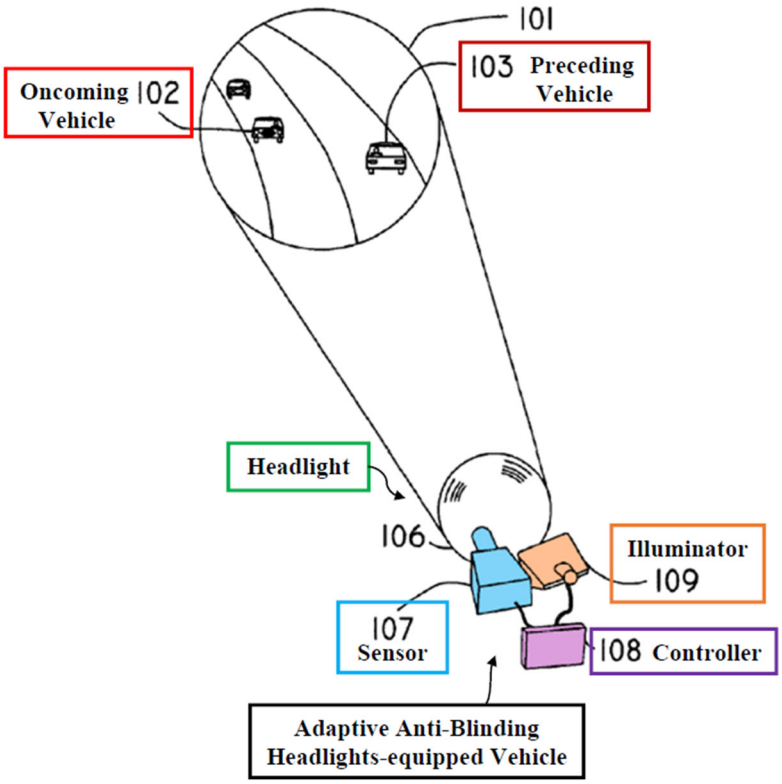

EX1005, FIG. 1 (annotated).

117. Kobayashi also discloses a system for a motor vehicle, specifically a lighting device that steers light ("changing an irradiating direction") based at least in part based on map data/information, including GPS data or beacon data. *See* EX1008, Abstract, 1:10-63.

118. As I explained above in Section VIII.B, the preambles of independent claims 12 and 23 recite additional features as shown in claim elements [1.1], [1.2], and [1.3], *see* Table 1, that are disclosed in the prior art. And the disclosures mapped below that relate to the processor(s), memory, and instructions of claim 1, apply equally to and render obvious the system claims (1-11), non-transitory

computer-readable storage medium claims (12-22), and computer-implemented method claims (23-33). Substantively, the disclosures showing the obviousness of the claims apply no matter how the features are phrased within the different claim sets. Those additional features are addressed below in Section X.A.3-X.A.5.

3. [1.1]: "a plurality of headlamps, each comprising a plurality of LED light sources;"

***See* [12.P]: ("a plurality of headlamps that each comprising a plurality of LED light sources,")**

***See* [23.P]: ("the headlamps including a plurality of LED light sources,")**

119. Beam discloses a plurality of *headlamps*, each comprising a plurality of *LED light sources*, that may be configured as "an array of individual, independently controllable microbeam sources." EX1005, 8:4-17. Beam expressly discloses in claims 4 and 5 that the light source as referred to as comprising microbeams may be configured as an array of *individual, independently controllable LEDs*. EX1005, 2:53-3:3, 4:9-59, 8:4-17.

120. Kobayashi's system also includes a plurality of *headlamps*. *See*, *e.g.*, EX1008, 17:3-15, FIGS. 6, 12. Moreover, although Kobayashi does not expressly reference LEDs, LEDs were well known as advantageous light sources for headlamps well in advance of the '029 patent's earliest possible priority date. *See*, e.g., EX1022, 2:22-26, 3:44-47; EX1029, 987, 991.

121. In view of the above, Beam discloses these elements.

4. [1.2]: "one or more processors; and"

***See* [12.P]: ("one or more processors")**

***See* [23.P]: ("computer-implemented method")**

122. Beam discloses at least one *processor*, for example, referring to Figure 7 and its accompanying description. Specifically "[t]he *spatial scene data* from sensor 107…becomes the input to *a processor 1105*." EX1005, 5:34-36. Figure 7 shows that controller 108 includes *processor 1105* that uses appropriate algorithms on the incoming data to determine locations to blank. EX1005, 5:33-6:4.

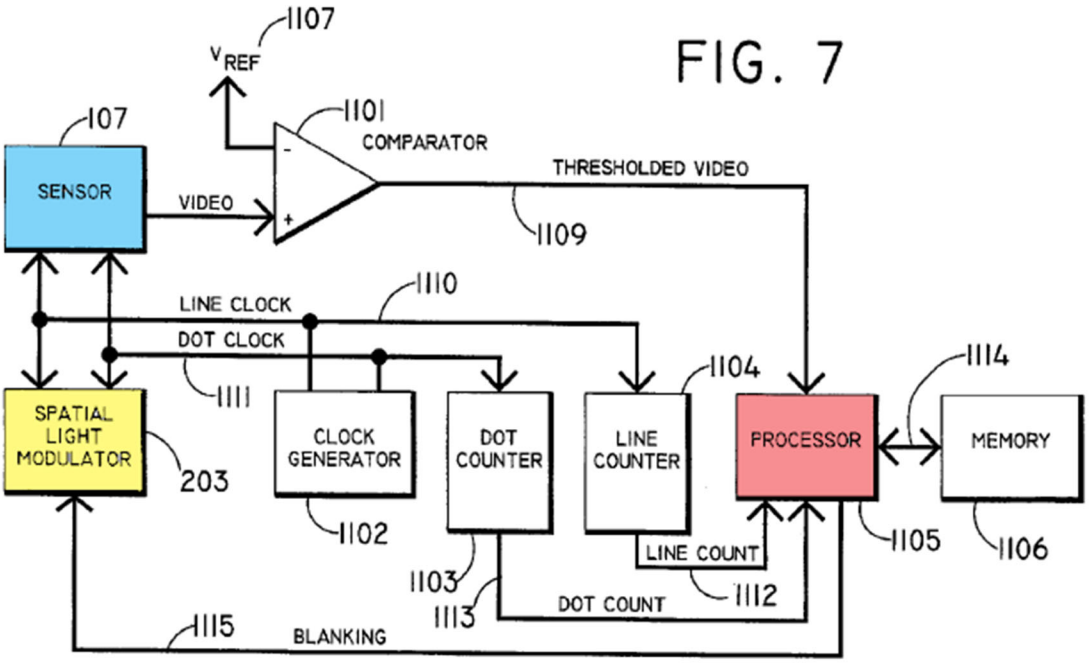

EX1005, FIG. 7 (annotated).

123. Kobayashi, too, discloses one or more *processors*, including *ECU 10*. As used in this field, I confirm that a POSA would have understood that ECU 10 would contain one or more *processors*, as common in the field. *See*, *e.g.*, EX1034,

FIG. 2, 1:24-38; 14:7-51. As used in the field "ECU," is commonly referred to as the electronic control unit, a hardware unit that includes a processor/memory, with programmed instructions to execute its processing and control functions. Control signals are input into ECU 10, including from map data, and ECU 10 processes the input data and sends output signals to control the headlamps. EX1008, 17:3-15.[5]

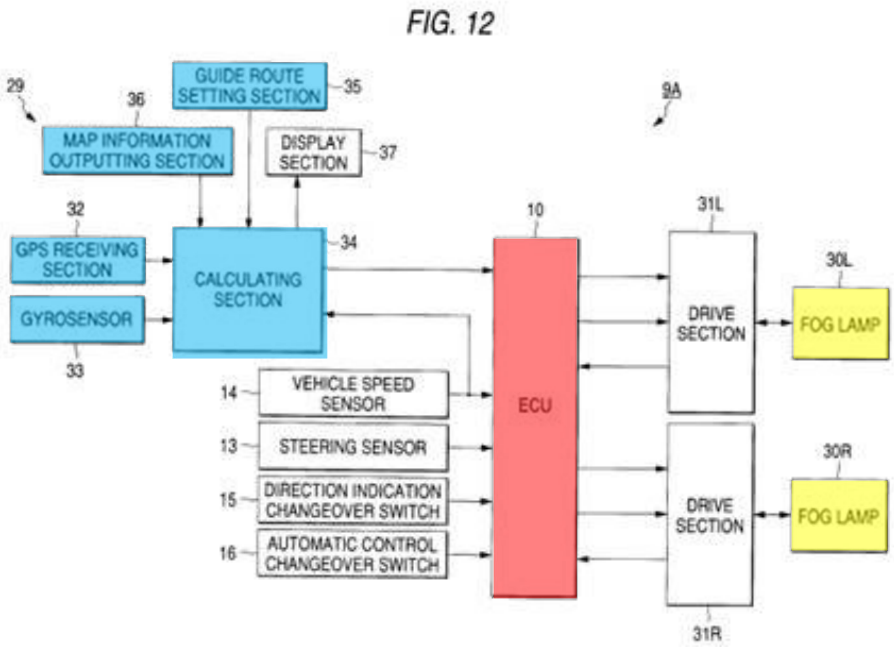

EX1008, FIG. 12 (annotated).

[5] I note that claim 23 does not expressly recite "processor." It does use the phrase "computer-implemented method." A POSA would have understood that computing, data processing, etc., via processors, are generally used in such "computer-implemented methods."

124. In view of the above, Beam and Kobayashi both disclose these elements.

5. [1.3]: "a memory storing instructions that, when executed by one or more of the one or more processors, enable the one or more processors to:"

***See* [12.P]: ("storing instructions that, when executed by one or more processors")**

***See* [23.P]: ("A computer-implemented method")**

125. Beam discloses memory 1106—specifically that controller 108 includes processor 1105 that uses appropriate algorithms on the incoming data to determine the locations to be blanked, and includes memory 1106. EX1005, 5:33-54.

126. A POSA would have further understood that Kobayashi's ECU 10 also has a *memory* that stores *instructions and prediction logic*. *See*, *e.g.*, EX1008, 10:1-17, 11:34-14:52 (*representative lookup tables*, stored in ECU 10's memory); *see also* EX1008, 17:29-50 and FIGS. 1, 9, 12.

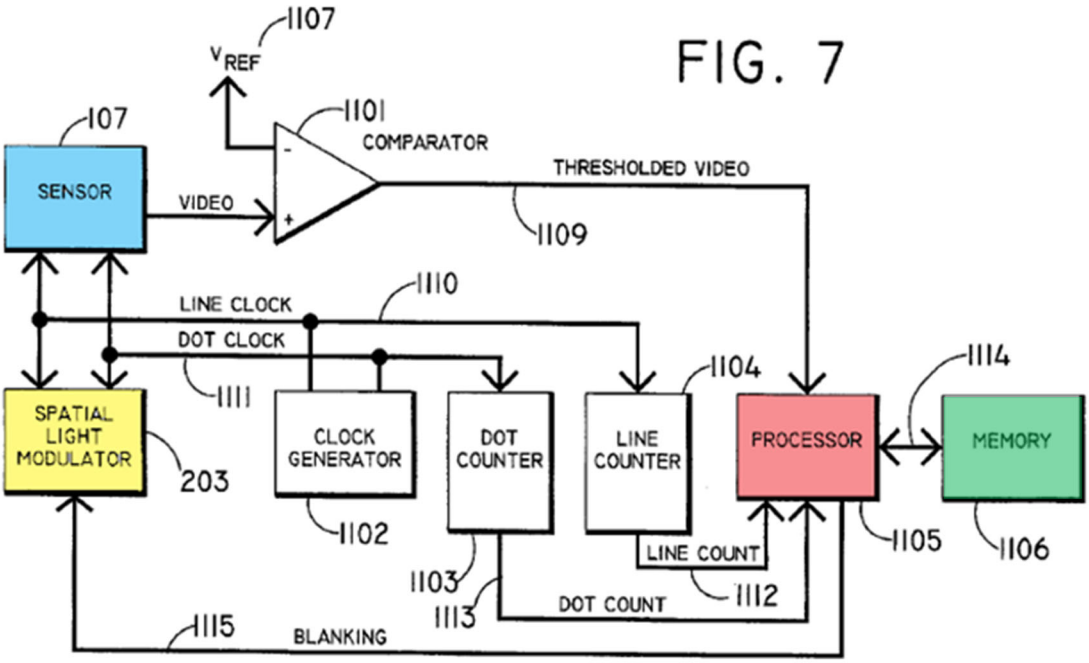

EX1005, FIG. 7 (annotated).

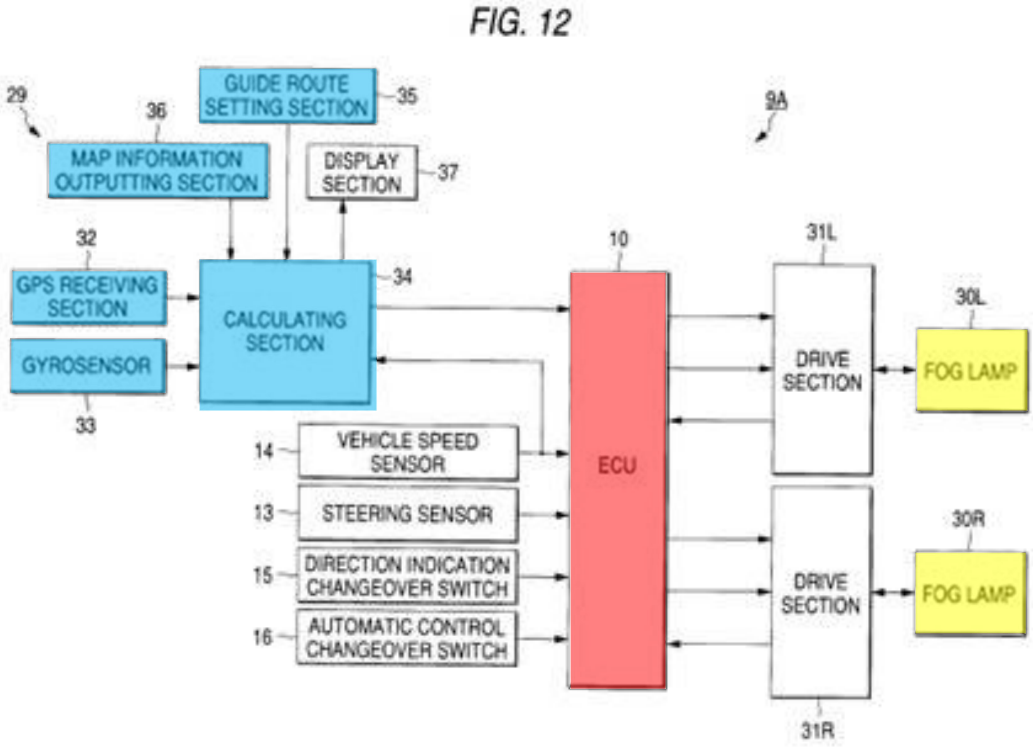

EX1008, FIG. 12 (annotated).

127. Indeed, a POSA would have understand that the "*instructions*" in the '029 patent claims would have been the typical way the processor (system) operates as disclosed by both Beam and Kobayashi.[6] EX1005, 5:33-54; EX1008, 10:1-17, 11:34-14:52, 17:29-50 and FIGS. 1, 9, 12. *See also*, *e.g.*, EX1034, FIG. 2, 1:24-38; 14:7-51.

128. In view of the above, Beam and Kobayashi both disclose these elements.

6. [1.4]: "receive first data, including at least map data, indicating a road curvature upcoming along a road on which the motor vehicle is traveling;"

[12.4]: "receive first data, including at least map data, indicating a road curvature upcoming along a road on which the motor vehicle is traveling;"

[23.4]: "determining an upcoming shape change of a road, ahead of the motor vehicle, based on first data, including map data, indicating the shape change;"

129. Beam does not expressly disclose receiving map data, indicating a road curvature. But Beam does disclose prior systems that control headlamps in

[6] I note that claim 23 does not expressly recite "memory." It does use the phrase "computer-implemented method." A POSA would have understood that computing, data processing, etc., using memory, are generally used in such "computer-implemented methods."

response to *changes in the vehicle's position* (e.g., tilt on a hill) and steering mechanism (e.g., *along a curve*), etc. *See* EX1005, 1:61-2:6, 2:15-22. And as I have previously explained, a POSA would have been motived to combine Beam with Kobayashi's *map data features*. *See* Section X.A.1, above.

130. Kobayashi discloses a lighting device that steers light ("changing an irradiating direction") based at least in part based on *received map data* from GPS navigation device 29, controlled via an ECU 10. *See* EX1008, Abstract, 17:8-15. Kobayashi's system uses *map data received* from GPS navigation device 29 to predict and adjust illumination towards an advancing direction of the vehicle, e.g., including tracking *any upcoming road curvature*, intended by the driver. EX1008, Abstract, 1:10-2:35, 4:60-64, and FIGS. 1, 6, 10, 12. And in my opinion, a POSA would have understood that "map data," includes at least 2-dimensional data, such that the *road curvature* is indicated by it.

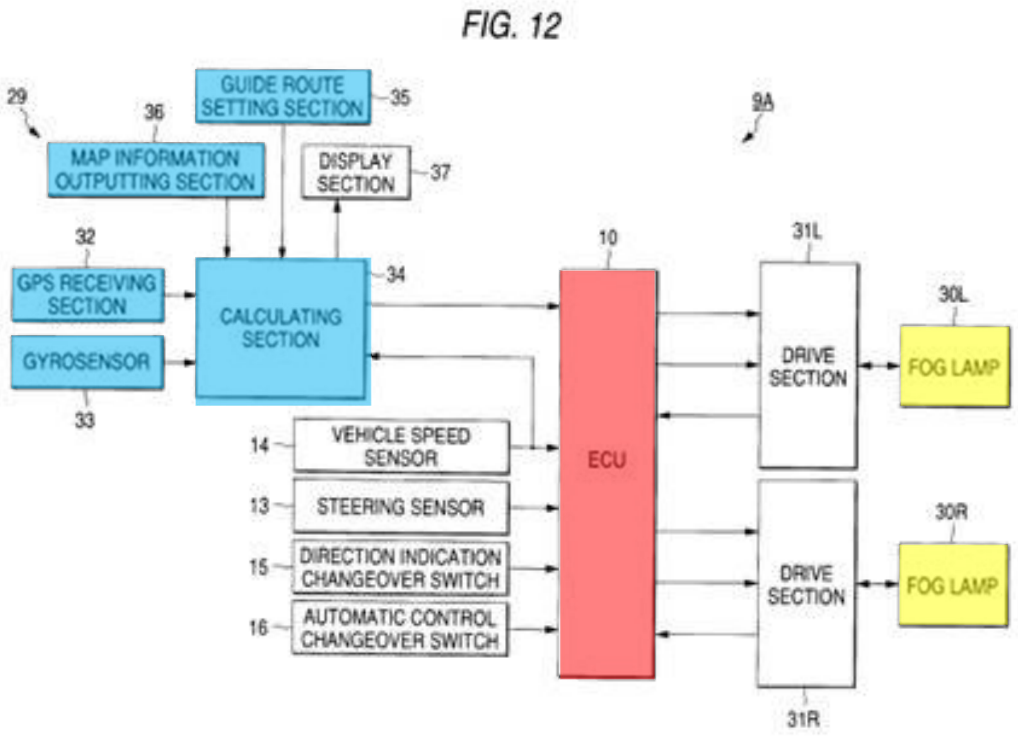

EX1008, FIG. 12 (annotated).

131. As I explained above in Section X.A.1, a POSA would have modified Beam's system to include map data functions of Kobayashi's ECU 10 to further control Beam's directional LEDs, thereby improving driver safety. *See*, *e.g.*, EX1005, 5:33-54; Section X.A.1. Specifically, a POSA would have incorporated the road profile calculating means 2 disclosed by Kobayashi (e.g., as described in EX1008, Abstract, 1:10-2:35, 4:60-64, and FIGS. 1, 6, 10, 12) into Beam's AABH system (e.g., into sensor 107 and controller 108). In this way, road curvature data of Beam's detected scene 101 is provided, increasing illumination in a direction of the road curvature while maintaining Beam's AABH system, improving safety.

132. By including an additional source of data for Beam's controller 108, namely Kobayashi's map data, a POSA would have understood that such a modification would enhance the safety of Beam's AABH system by increasing illumination based on the upcoming road curvature along a road on which the motor vehicle is traveling. Doing so would have merely been applying Kobayashi's known technique of using map data to shape and re-shape light and/or adjust intensity to Beam's similar, known device based on light sensing inputs, in the same way. *See above*, Section X.A.1.

133. And as explained in Section VIII.A., such control using map data, e.g., GPS data, was well known. EX1025, 186; EX1026, 461-462 ("To obtain more accurate information on driving regions, it is advantageous to use data from a GPS navigation system."); EX1024, 815-816; EX1023, 514-515, 525; EX1027, Abstract; EX1023, 524 (Table 1 showing increased visibility along straight and curved roads with adaptive headlight systems); EX1025, 202, 205-206 ("[B]ecause of the available luminous flux in direction of driving, the driver has the ability to recognize the subsequent direction peripherally and can fixate other interesting objects in the road area."); EX1026, 451-452.

134. I again note for completeness that because claim 23 and its dependents have a method claim structure, they differ slightly in terminology used. But that does not change the substance or applicable disclosure to render those features

obvious. And as can be seen, there is no patentable difference in the claim features across the corresponding claim elements, and a POSA would have understood so. *See above,* Section VIII.C.

135. Specifically, independent claims 1 and 12 recite that one or more processors "receive first data, including at least map data, indicating a road curvature upcoming along a road on which the motor vehicle is traveling." Independent claim 23 varies slightly, and recites "determining an upcoming shape change of a road, ahead of the motor vehicle, based on first data, including map data, indicating the shape change." The data including at least map data received in claims 1 and 12 indicates a road curvature, and the verb in claim 23 *determines* an upcoming shape change (which may be a curve) based on data including map data. Thus, there is no patentable difference between these limitations, and the same prior art references are applied to these limitations as provided in the analysis above.

136. In view of the above, Kobayashi discloses these elements.

7. [1.5]: "determine a light change, the change adapting a light pattern of the headlamps in at least one of color, intensity or spatial distribution to increase light in a direction of the road curvature ahead of the motor vehicle and shaping light based at least in part on the road curvature; and"

[12.5]: "determine a light change, the change adapting a light pattern of the headlamps in at least one of color, intensity or spatial distribution to increase light in a direction of the road curvature ahead of the motor vehicle and shaping light based at least in part on the road curvature; and"

[23.5]: "determining a light output, the output adapting a light pattern of the headlamps in at least one of color, intensity or spatial distribution to increase light in a direction associated with the shape change ahead of the motor vehicle and shaping light based on the shape change; and"

137. Beam's controller 108 uses input data from sensor 107 to *determine which LEDs to adjust* to protect other drivers, while maintaining appropriate forward lighting. EX1005, 4:16-19. The system "us[es] that information to *control the intensity, and/or the angular position*, of one or more" LEDs. *See* EX1005, Abstract. Such control is "*dynamically varying* in position and in size," in response to the control input. EX1005, 5:46-54. So, Beam "determines a light change," and adapts the headlamps' light pattern in both intensity *and* spatial distribution.

138. Kobayashi also describes "determin[ing] a light change." With Kobayashi's ECU functionality, the system uses the *map data from Kobayashi's GPS navigation device* 29 to "increase light in a direction of the road curvature ahead of the motor vehicle," thus "shaping light based at least in part on the road

curvature." *See* EX1008, 17:8-15, 1:21-29, 4:6-21, 15:15-28. Kobayashi specifically plans and controls illumination—including light direction ahead of curves, for example on *curved roads r1, R1* in accordance with the driver's line of sight to improve safety. EX1008, 14:53-15:28. When vehicle K turns to the left (point A), the left shoulder is illuminated, and when vehicle K turns to the right (point C), the right shoulder is illuminated, thereby *adapting the light pattern in intensity and spatial distribution*, shaping light based at least in part on road curvature, based on the map data. EX1008, 14:53-15:28.

139. Thus, the combined Beam-Kobayashi system determines a light change and adapts a light pattern of the headlamps (e.g., controls steering of light via "changing an irradiating direction") based at least in part on map data (e.g., road curvatures). *See* EX1008, Abstract.

140. As above, by including an additional source of data for Beam's controller 108, namely from the technique using map data as in Kobayashi, would have enhanced Beam's AABH system by increasing or directing illumination based on the road curvature, thereby improving driver safety as Beam seeks to do. And a POSA would have incorporated the known components of Kobayashi into Beam's AABH system (e.g., into sensor 107 and controller 108, as or separate components) to provide road curvature data of Beam's detected scene 101,

allowing Beam's AABH system to increase illumination in a direction of the road curvature, improving safety. *See also above*, Section X.A.1.

141. And as I explained, for example, in Section VIII.A., such adaptive light control was well known. *See*, *e.g.*, EX1015, 3-6; EX1016, 1-19; EX1023, 514-515; EX1024, 819. EX1018, 33-36 ("A new light concept called Adaptive Light Control (ALC) is developed with the aim to improve night time traffic safety."); EX1019, 1-2 ("A major breakthrough in improving visibility, safety and comfort under all driving conditions is given by a headlamp with adjustable light intensity and beam pattern according to the vehicle speed, steering wheel angles and different driving conditions."); EX1020, 368, 370, 374-378 ("The car's sensors analyze and evaluate the driving situation and generate a light distribution that is adapted to that particular situation. In this process, not only the driver's comfort is increased but the visibility is improved also. This has a direct positive impact on traffic safety."); EX1024, 819 ("The challenge of such a system approach and the necessary and not so easy change towards performance and system requirements was clearly seen - but also the prospects of possible safety improvement."); EX1025, 202 ("One explanation could be that because of the available luminous flux in direction of driving, the driver has the ability to recognize the subsequent direction peripherally and can fixate other interesting objects in the road area. With other words the driver has more time for driving and the tiredness of the eyes could

be reduced."); EX1028, 844 ("The driver's comfort and safety can be improved considerably by adaptive motor vehicle headlighting, with the today's technical means in lighting design and manufacturing, as well as sensors and communication systems in cars."). And it was well known that adaptive lighting used multiple directional light sources (e.g., multiple directional beams, such as light modules or beam contributors) to produce an adaptive light pattern by varying illumination characteristics including beam intensity, beam shape, beam color, beam direction around curved roads, and glare reduction. EX1017, 3-10 ("[A] curve or an intersection can be adaptively illuminated before reaching actually the point when the steering wheel is turned or the turn indicator is operated."); EX1018, 33-36 ("The advantage of using Adaptive Light Control is shown in Fig. 5, where one observes a country road lit correctly. Instead of illuminating some fields or trees, the available light is directed dynamically in the direction where it is actually needed, enhancing the visual information for the driver."); EX1019, 1-2 ("A major breakthrough in improving visibility, safety and comfort under all driving conditions is given by a headlamp with adjustable light intensity and beam pattern according to the vehicle speed, steering wheel angles and different driving conditions."); EX1020, 368, 370, 374-378 ("The results show, that significant improvements can be proven by the adaptive headlamp system, without generating additional glare for oncoming traffic").

142. Independent claims 1 and 12 recite "determine a light change, the change adapting a light pattern of the headlamps." Independent claim 23 varies slightly, and recites the verb "determining a light output, the output adapting a light pattern of the headlamps." But a *determined* "light change" subsumes the *determining* of a "light output," and the adapting of a light pattern of headlamps in both claims indicates that there is no patentable difference between these limitations, and the same prior art references are applied to these limitations as provided in the analysis above.

143. In view of the above, Beam and Kobayashi both disclose these elements.

8. [1.6]: "control at least a first plurality of the LED light sources to provide light based at least in part on the determined light change and prior to the motor vehicle reaching the road curvature."

[12.6]: "control at least a first plurality of the LED light sources to provide light based at least in part on the determined light change and prior to the motor vehicle reaching the road curvature."

[23.6]: "prior to reaching the road shape change, causing at least a first plurality of the LED light sources to provide light based at least in part on the determined light output."

144. This element simply implements the control of the LEDs based on the determined light change/output in [1.5]/[12.5]/[23.5].

145. Again, Beam's controller 108 uses input data from sensor 107 to determine which LEDs to adjust to protect other drivers, while maintaining appropriate forward lighting. EX1005, 4:15-19. The system "us[es] that information to *control the intensity, and/or the angular position*, of one or more" LEDs. *See* EX1005, Abstract. Such control is "*dynamically varying* in position and in size," in response to the control input. EX1005, 5:34-54. Beam's processor 1105 (*see* EX1005, 5:34-36) as used in *controller* 108 uses appropriate algorithms on the incoming data to determine the LEDs to be controlled, e.g., blanked. EX1005, 5:33-54, FIG. 7. Thus, Beam discloses "control[ling] at least a first plurality of the LED light sources to provide light based at least in part on the determined light change."

146. Kobayashi also described the control of the light sources and to provide the determined light changes, although it does not expressly disclose the use of an LED source. *See* EX1008, 17:8-15, 1:21-29, 4:6-21, 15:15-28.

147. As combined above, Beam's LEDs would operate at least partly based on Kobayashi's map data functions, via Kobayashi's road profile calculating means 2 and vehicle advancing direction predicting means 3 (e.g., including GPS navigation device 29) in order to further control Beam's directional LEDs, prior to the curvature as described in Kobayashi. *See*, *e.g.*, EX1008, 14:53-15:28, FIG. 10; *see also* Section X.A.7.

148. Independent claims 1 and 12 recite that one or more processors "control at least a first plurality of the LED light sources to provide light based at least in part on the determined light change and prior to the motor vehicle reaching the road curvature." Independent claim 23 varies slightly, and recites "prior to reaching the road shape change, causing at least a first plurality of the LED light sources to provide light based at least in part on the determined light output." Again, as with elements discussed above, that independent claims 1 and 12 recite a type of shape change ("road curvature"), the determination of a light change or light output does not patentably change the claim. Thus, there is no patentable difference between these limitations, and the same prior art references are applied to these limitations as provided in the analysis above.

149. In view of the above, the Beam-Kobayashi combination discloses these elements.

150. Furthermore, in view of the above, as combined, claims 1, 12, and 23 are rendered obvious by the Beam-Kobayashi combination.

B. Dependent claims

151. None of the dependent claims confer patentable subject matter to the '029 patent. Instead, they focus on the obvious, iterative process that occurs when travelling on a road that includes curves, other vehicles, etc.—headlamps are continuously controlled to respond to actual driving conditions. This type of

iterative process was known in the art, in that such controllers, systems, and methods constantly refresh with new data, analyze, and repeat the control steps. *See*, *e.g.*, EX1008, FIG. 9 (Kobayashi's control method for light distributing control includes "Return" and is an iterative process that accounts for, e.g., *reshaping*.)

152. The dependent claims simply illustrate what was apparent to a POSA and disclosed in the prior art: that a single adaption to a curved road based on map data is insufficient—such systems should (1) re-align when the vehicle exits the curve and (2) respond to a future curve or a vehicle not yet encountered.

153. For completeness, I note that method claims depending from claim 23 differ slightly in claim language from corresponding claims depending from claim 1 and 12, but the same disclosure and rationale apply equally, as shown below. *See also*, Table 2. I turn now to the dependent claims.

> **1. [2]: "wherein the determination of the light change includes selection of the first plurality of the LED light sources."**
>
> **[13]: "wherein the determination of the light change includes selection of the first plurality of the LED light sources."**
>
> **[24]: "wherein the determining the light includes selecting the first plurality of the LED light sources."**

154. These elements simply recite selection of the LEDs. Beam's controller 108 uses sensor data input "to *determine which microbeams*," e.g., LEDs, "*must be*

reduced in intensity to protect the other drivers." EX1005, 4:15-18, Abstract. Indeed, such inputs are used to "*control the intensity, and/or the angular position*, of one or more" LEDs. EX1005, Abstract. Beam's processor 1105 uses appropriate algorithms on the incoming data to determine the locations to be blanked, thus selecting which LEDs should be on and which should be off or reduced. EX1005, 5:33-54. Thus, when Beam determines a light change should be made, it selects a first plurality of LEDs to provide light.

155. Claim 2 depends from claim 1. Claim 13 depends from claim 12. Claim 24 depends from claim 23.

156. Dependent claims 2 and 13 recite "wherein the determination of the light change includes selection of the first plurality of the LED light sources." Dependent claim 24 recites "wherein the determining the light includes selecting the first plurality of the LED light sources." There is no patenable difference between these limitations, and the same prior art references are applied to these limitations as provided in the analysis above.

157. In view of the above, as combined, claims 2, 13, and 24 are rendered obvious by the Beam-Kobayashi combination.

2. [3]: "wherein the instructions include instructions that, when executed by the one or more processors, enable the one or more processors to reshape light based on the road curvature as the motor vehicle travels at least to or through the road curvature."

[14]: "wherein the instructions include instructions that, when executed by the one or more processors, enable the one or more processors to reshape light based on the road curvature as the motor vehicle travels at least to or through the road curvature."

[25]: "reshaping light based on the shape change as the motor vehicle travels at least to or through the shape change."

158. These elements simply implement "*reshaping*" the light based on road curvature as the vehicle travels "at least to or through the road curvature," e.g., through the customary step of the instructions stored in the memory and executed by the processor. *See*, *e.g.*, *above* Section X.A. And it is rendered obvious by the Beam-Kobayashi combination.

159. As with the control of the LEDs based on the determined light change of the prior elements, such as [1.6]/[12.6]/[23.6], Beam's controller 108 uses sensor data input "to *determine which microbeams*," e.g., LEDs, "*must be reduced in intensity* to protect the other drivers." EX1005, 4:15-18, Abstract. Indeed, such inputs are used to "*control the intensity, and/or the angular position*, of one or more" LEDs. EX1005, Abstract. Such a process is iterative—recalculating and adjusting light as needed. *See* EX1005, Abstract. Beam's processor 1105 (*see* EX1005, 5:34-36) as used in controller 108 uses appropriate algorithms (via

instructions) on the incoming data to determine the LEDs to be controlled, e.g., blanked, to control where the light is directed. EX1005, 5:33-54; FIG. 7. Such instructions, when executed enable the processor 1105 to reshape the light based on the control inputs. Such instructions are well known, and it was well known that such controllers (such as ECUs) operate based on instructions. *See*, *e.g.*, EX1034, FIG. 2, 1:24-38; 14:7-51.

160. Kobayashi expressly describes *reshaping* the light *based on road curvature*, which would have easily been implemented with Beam's controller 108, which is already configured to reshape the light based on various inputs, and that GPS navigation device 29 includes "instruction information and information stored by study." EX1008, 14:53-15:28, 17:29-50, FIG. 10; *see also* EX1008, FIG. 12. In doing so, the combined system achieves the aim that such systems should (1) re-align when the vehicle exits the curve and (2) respond to a future curve or a vehicle not yet encountered.

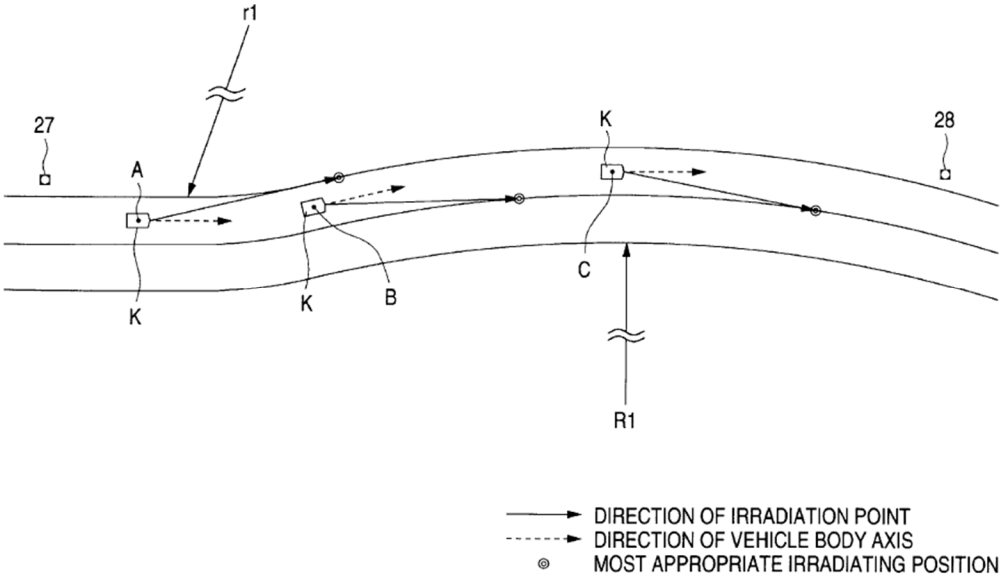

EX1008, FIG. 10.

161. Kobayashi specifically plans and controls illumination—shaping and re-shaping light direction ahead of curves, for example on curved roads r1, R1 to improve safety. EX1008, 14:53-15:28. When vehicle K turns to the right (point C), the right shoulder is illuminated, thereby adapting the light pattern in intensity and spatial distribution, *reshaping* light relative to the previous curve based at least in part on road curvature, based on map data. EX1008, 14:53-15:28; *see also above*, Section X.A.1.

162. Claim 3 depends from claim 1. Claim 14 depends from claim 12. Claim 25 depends from claim 23.

163. Dependent claims 3 and 14 recite that the one or more processors "enable the one or more processors to reshape light based on the road curvature as the motor vehicle travels at least to or through the road curvature." Dependent

claim 25 varies slightly and recites "reshaping light based on the shape change as the motor vehicle travels at least to or through the shape change." But as above, a shape change may be a curve. Thus, there is no patentable difference between these limitations, and the same prior art references are applied to these limitations as provided in the analysis above.

164. In view of the above, as combined, claims 3, 14, and 25 are rendered obvious by the Beam-Kobayashi combination.

3. [4]: "wherein the reshaping of light further includes control to at least one of the first plurality of LED light sources, or a second plurality of LED light sources, including at least one LED light source different from the LED light sources of the first plurality of LED light sources, to provide reshaped light."

[15]: "wherein the reshaping of light further includes control to at least one of the first plurality of LED light sources, or a second plurality of LED light sources, including at least one LED light source different from the LED light sources of the first plurality of LED light sources, to provide reshaped light."

[26]: "wherein the reshaping light further includes controlling at least one of the first plurality of LED light sources, or a second plurality of LED light sources, including at least one LED light source different from the LED light sources of the first plurality of LED light sources, to provide reshaped light."

165. Similar to claims 3/14/25, these elements further contemplate selecting one of the first plurality of LED's or some second plurality of LEDs with one different LED from the first to provide *reshaped* light. A POSA would have

recognized that *reshaping* Beam's light in any sense would require taking some action with *at least one* of the AABH LEDs. Beam illustrates such a function, i.e., the first and second plurality of LEDs do not overlap entirely, in Figures 1C and 1D, below.

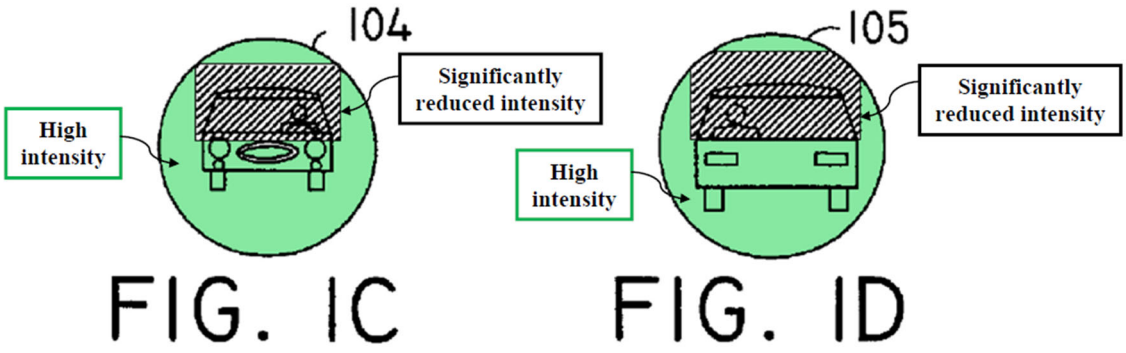

EX1005, FIGS. 1C and 1D (annotated).

166. Sensed inputs into controller 108 results in significant illumination intensity reduction in a specific section (shaded area). EX1005, 4:10-25. Specifically, Beam's controller 108 uses sensor data input "to *determine which microbeams*," e.g., LEDs, "*must be reduced in intensity* to protect the other drivers." EX1005, 4:15-18, Abstract. Such inputs are used to "*control the intensity, and/or the angular position*, of one or more" LEDs. EX1005, Abstract. Beam's processor 1105 (*see* EX1005, 5:34-36) as used in controller 108 uses appropriate algorithms on the incoming data to determine the LEDs to be controlled, e.g., blanked, thus making it clear that a specific LED is used in one situation (e.g., Figure 1C) but not in another situation (e.g., Figure 1D, having an enlarged

blanked area). EX1005, 5:33-54, FIG. 7. Such control is "*dynamically varying* in position and in size," in response to the control input. EX1005, 5:46-54.

167. And as in Section X.B.2. with reference to claims [3], [14], and [25], for example, Kobayashi expressly describes reshaping the light based on road curvature, which would be implemented with Beam's controller 108. EX1008, 14:53-15:28, FIG. 10, FIG. 12, *see also* Section X.A.1., X.B.2., above.

168. Claim 4 depends from claim 3, which in turn depends from claim 1. Claim 15 depends from claim 14, which in turn depends from claim 12. Claim 26 depends from claim 25, which in turn depends from claim 23.

169. Dependent claims 4 and 15 recite "wherein the reshaping of light further includes control to at least one of the first plurality of LED light sources, or a second plurality of LED light sources, including at least one LED light source different from the LED light sources of the first plurality of LED light sources, to provide reshaped light." Dependent claim 26 varies slightly, and recites "wherein the reshaping light further includes controlling at least one of the first plurality of LED light sources, or a second plurality of LED light sources, including at least one LED light source different from the LED light sources of the first plurality of LED light sources, to provide reshaped light." The difference in using "to control" and "controlling" does not patentably change the analysis. There is no patentable

difference between these limitations, and the same prior art references are applied to these limitations as provided in the analysis above.

170. In view of the above, as combined, claims 4, 15, and 26 are rendered obvious by the Beam-Kobayashi combination.

4. [5]: "wherein the increase of light in the direction of the road curvature includes at least an increase of light emitted at a level below high-beam light and directed in the direction of the road curvature."

[16]: "wherein the increase of light in the direction of the road curvature includes at least an increase of light emitted at a level below high-beam light and directed in the direction of the road curvature."

[27]: "wherein the increase of light in the direction associated with the shape change includes at least light output that increases light emitted at a level below high-beam light and directed in the direction associated with shape change."

171. Beam and Kobayashi both disclose this feature, which amounts to nothing more than directing any light (other than high-beam) in the direction of the road curvature.

172. Beam's AABH unit explicitly discloses a "default illumination level will be the equivalent of today's *low beams*" (i.e., a level *below high-beam* light because by default, a low-beam always provides the illumination or light level lower than a high-beam) and that the illumination in the "darkened" or "shaded areas" is "significantly less than with current low beams." EX1005, 2:59-62, 2:65-3:3, 4:20-25, Abstract.

173. And Kobayashi also discloses this feature, and describes increasing light emitted at a *level below high-beam light and directed in the direction of the road curvature*, for example, with reference to Figure 8.

FIG. 8

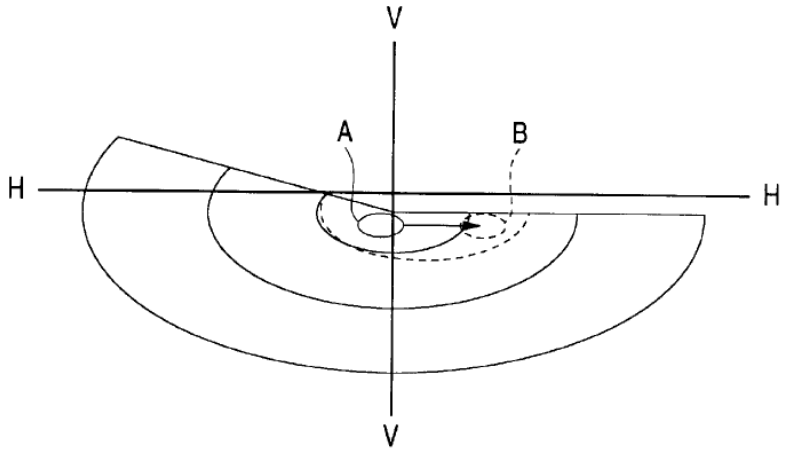

EX1008, FIG. 8.

174. The light distribution pattern of a low beam shows the center of luminous intensity is moved from section A to section B, so that the luminous intensity distribution can be changed towards a curved road, e.g., as shown by a broken line in the drawing. EX1008, 11:14-33. In Figure 8, lines "H—H" and "V—V" are reference lines on a screen located in the front of the vehicle by a

predetermined distance (light distribution in an angular coordinate), and line "H—H" is a horizontal line, and line "V—V" is a vertical line. EX1008, 11:14-33.[7]

175. Claim 5 depends from claim 1. Claim 16 depends from claim 12. Claim 27 depends from claim 23.

176. Dependent claims 5 and 16 recite that "the increase of light in the direction of the road curvature includes at least an increase of light emitted at a level below high-beam light and directed in the direction of the road curvature." Dependent claim 27 varies slightly, and recites that "the increase of light in the direction associated with the shape change includes at least light output that increases light emitted at a level below high-beam light and directed in the direction associated with shape change." Again, as with elements discussed above, claims 5 and 16 recite a type of shape change ("road curvature"), and the increase of light in the direction of the road curvature vs. "in the direction associated with the shape change," does not patentably change the claim. Thus, there is no patentable difference between these limitations, and the same prior art references are applied to these limitations as provided in the analysis below.

---

[7] Of course, controlling direction and range may also be conducted on a main beam. EX1008, 11:23-33. Also, the entire range may be directed to a desired direction. EX1008, 11:23-33.

177. In view of the above, as combined, claims 5, 16, and 27 are rendered obvious by the Beam-Kobayashi combination.

5. [6.1]: "wherein the instructions include instructions that, when executed by the one or more processors, enable the one or more processors to:"

[17.1]: "wherein the instructions include instructions that, when executed by the one or more processors, enable the one or more processors to:"

[28.1]: (no corresponding element due to claim 23 not positively reciting "processors")

[6.2]: "determine a second light change, the second change adapting the light pattern of the headlamps in at least one of color, intensity or spatial distribution to increase light in a direction of a second road curvature ahead of the motor vehicle, determined based on at least one of the first data or second data including at least second map data, and the second change shaping light based at least in part on the second road curvature; and"

[17.2]: "determine a second light change, the second change adapting the light pattern of the headlamps in at least one of color, intensity or spatial distribution to increase light in a direction of a second road curvature ahead of the motor vehicle, determined based on at least one of the first data or second data including at least second map data, and the second change shaping light based at least in part on the second road curvature; and"

[28.2]: "determining a second light output, the second output adapting the light pattern of the headlamps in at least one of color, intensity or spatial distribution to increase light in a direction associated with a second shape change ahead of the motor vehicle, determined based on at least one of the first data or second data including at least second map data, and the second output shaping light based at least in part on the second shape change; and"

[6.3]: "control at least a second plurality of the LED light sources, having at least one LED light source different from the first plurality of LED light sources, to provide light based at least in part on the determined second light change and prior to the motor vehicle reaching the second road curvature."

[17.3]: "control at least a second plurality of the LED light sources, having at least one LED light source different from the first plurality of LED light sources, to provide light based at least in part on the determined second light change and prior to the motor vehicle reaching the second road curvature."

[28.3]: "controlling at least a second plurality of the LED light sources, having at least one LED light source different from the first plurality of LED light sources, to provide light based at least in part on the determined second output and prior to the motor vehicle reaching the second shape change."

178. As discussed above, the Beam-Kobayashi combined system is iterative and determines any number of future light changes. *See*, e.g.*,* Sections X.B.2, X.A.7, X.A.8, above. These elements are a verbose way of reciting that the system (including instructions) [6.1]/[17.1]/[28.1] (1) determines a second light change for a second (i.e., next) road curvature [6.2]/[17.2]/[28.2], and (2) controls the LEDs to provide light toward the second road curvature (i.e., "shaping light") based on map data [6.3]/[17.3]/[28.3]. Thus, as above, the Beam-Kobayashi combination discloses this function for the same reasons as in, Sections X.A.1, X.A.7, X.A.8, X.B.2, X.B.3. This is nothing more than a subsequent, repeated step in the

continuous, iterative processes of the ’029 patent, and Beam-Kobayashi combined systems can obviously function the same.

179. A POSA would have known that reshaping the light in any sense requires taking some action with at least one of the LEDs. Beam’s controller 108 uses sensor data input “to *determine which microbeams*,” e.g., LEDs, “*must be reduced in intensity* to protect the other drivers” [6.2]/[17.2]/[28.2]. EX1005, 4:15-18, Abstract. Indeed, such inputs are used to “*control the intensity, and/or the angular position*, of one or more” LEDs [6.3]/[17.3]/[28.3]. EX1005, Abstract. Beam’s processor 1105 (*see* EX1005, 5:34-36) as used in controller 108 uses appropriate algorithms on the incoming data to determine the LEDs to be controlled, e.g., blanked. EX1005, 5:33-54, FIG. 7. Such control is “*dynamically varying* in position and in size,” in response to the control input. EX1005, 5:46-54.

180. And as modified with Kobayashi’s ECU 10, the combined system receives signals sent from GPS navigation device 29 among others, and applies an iterative control scheme. *See*, *e.g.*, EX1008, 17:8-15, 17:41-50. Such an iterative control scheme, applying map data from a GPS system, beacon, etc., allows for directional light control on curved roads r1, R1, etc., in accordance with the driver’s line of sight to improve safety by adapting the light pattern in intensity and spatial distribution, shaping and reshaping light based at least in part on road

curvature—*no matter how many curves the vehicle encounters on its travels* [6.2]/[17.2]/[28.2], [6.3]/[17.3]/[28.3]. EX1008, 14:53-15:28 and FIGS. 9, 10, 12.

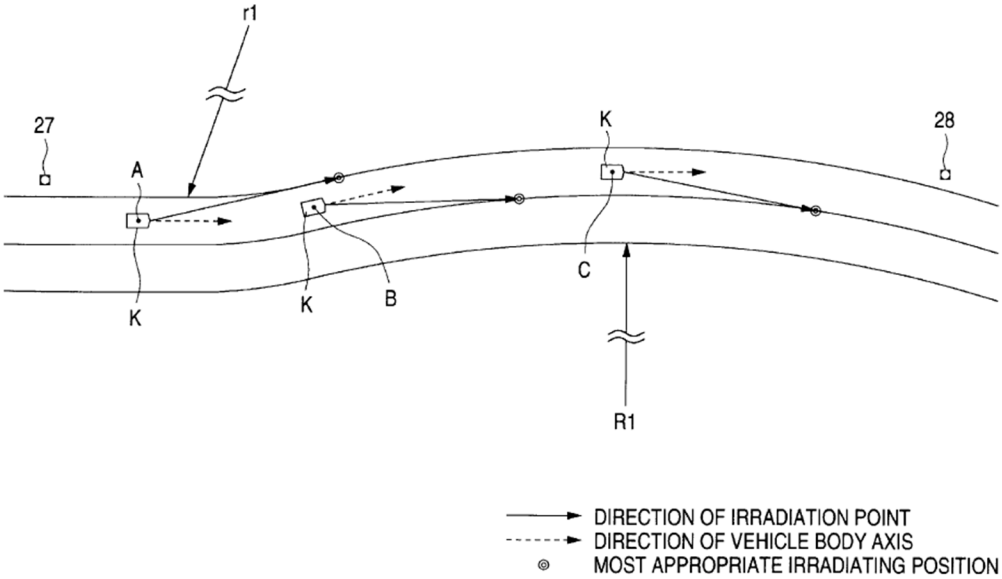

EX1008, FIG. 10.

181. *See also*, EX1008, FIG. 9 (showing an example flowchart with the final step being "RETURN," indicating a continuous, iterative process—it starts over).

FIG. 9

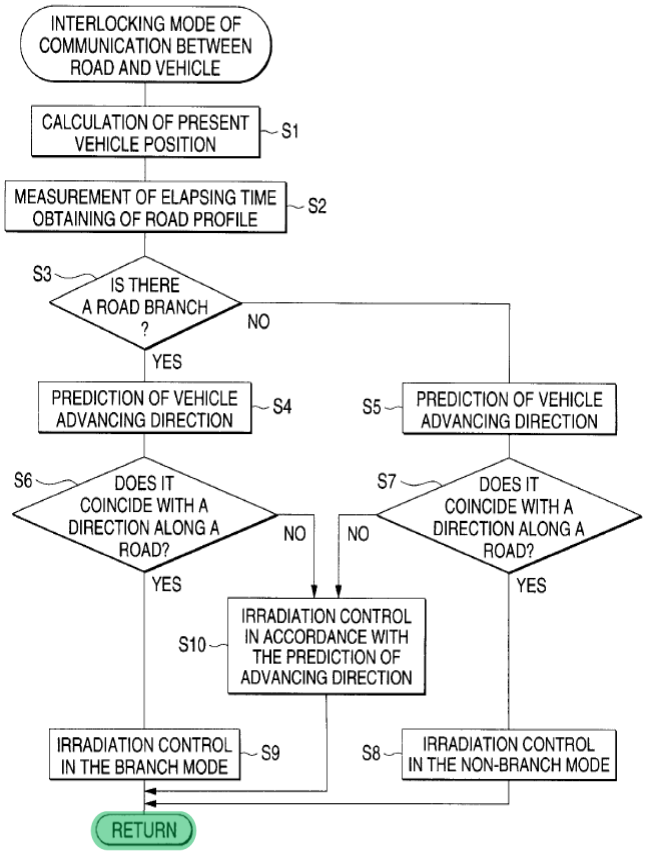

EX1008, FIG. 9 (annotated).

182. As I have explained throughout this declaration, e.g., above in Section VIII.A., arrays of independently controlled narrow-beam directional light sources, for example, light-emitting diode (LED) arrays, were developed with sufficient illuminance, directionality, and dynamic control as an alternative to traditional incandescent and gas discharge bulbs to provide adaptive light patterns and real-time feedback. EX1005, 1:5-3:44, 4:9-59; EX1010, 1:10-26, 9:18-26, 20:29-32; EX1015, 6-18, 21; EX1009, 16:6-25, 20:15-33.

183. Claim 6 depends from claim 1. Claim 17 depends from claim 12. Claim 28 depends from claim 23.

184. Dependent claims 6 and 17 recite that the one or more processors "determine a second light change, the second change adapting the light pattern of the headlamps in at least one of color, intensity or spatial distribution to increase light in a direction of a second road curvature ahead of the motor vehicle, determined based on at least one of the first data or second data including at least second map data, and the second change shaping light based at least in part on the second road curvature." Dependent claim 28 varies slightly and recites "determining a second light output, the second output adapting the light pattern of the headlamps in at least one of color, intensity or spatial distribution to increase light in a direction associated with a second shape change ahead of the motor vehicle, determined based on at least one of the first data or second data including at least second map data, and the second output shaping light based at least in part on the second shape change." But as with claim 1, a *determined* "light change" subsumes the *determining* of a "light output," and the adapting of a light pattern of headlamps in both claims indicates that there is no patentable difference between these limitations, and the same prior art references are applied to these limitations as provided in the analysis above.

185. Dependent claims 6 and 17 recite that the one or more processors "control at least a second plurality of the LED light sources, having at least one LED light source different from the first plurality of LED light sources, to provide light based at least in part on the determined second light change and prior to the motor vehicle reaching the second road curvature." Dependent claim 28 varies slightly, and recites "controlling at least a second plurality of the LED light sources, having at least one LED light source different from the first plurality of LED light sources, to provide light based at least in part on the determined second output and prior to the motor vehicle reaching the second shape change." Again, as with elements discussed above, that dependent claims 6 and 17 recite a type of shape change ("road curvature"), the determination of a light change or light output does not patentably change the claim. Thus, there is no patentable difference between these limitations, and the same prior art references are applied to these limitations as provided in the analysis above.

186. In view of the above, as combined, claims 6, 17, and 28 are rendered obvious by the Beam-Kobayashi combination.

6. [7.1]: "wherein the increase of light in the direction of the road curvature includes at least one of expansion of the light pattern in the direction of the road curvature or an increase to intensity of light directed in the direction of the road curvature; and"

[18.1]: "wherein the increase of light in the direction of the road curvature includes at least one of expansion of the light pattern in the direction of the road curvature or an increase to intensity of light directed in the direction of the road curvature; and"

[29.1]: "wherein the increase of light in the direction associated with the shape change includes at least one of expansion of the light pattern in the direction associated with the shape change or an increase to intensity of light directed in the direction associated with the shape change; and"

[7.2]: "wherein the determination of the light change includes determination of light changes to individual LEDs of the first plurality of LED light sources, at least one of the changes including at least one of:"

[18.2]: "wherein the determination of the light change includes determination of light changes to individual LEDs of the first plurality of LED light sources, at least one of the changes including at least one of:"

[29.2]: "wherein the determining the light output includes determining output for individual LEDs of the first plurality of LED light sources, the output including providing light directed in the direction associated with the shape change from an LED not providing light directed in the direction associated with the shape change prior to the change."

[7.3]: "a variation to at least one of intensity or color of individual LEDs of the first plurality of LED light sources, or"

[18.3]: "a variation to at least one of intensity or color of individual LEDs of the first plurality of LED light sources, or"

***See* [29.2] (no corresponding element in claim 29, no mentioning intensity or color of individual LEDs)**

[7.4]: "providing light directed in the direction of the road curvature from an LED not providing light directed in the direction of the road curvature prior to the change."

[18.4]: "providing light directed in the direction of the road curvature from an LED not providing light directed in the direction of the road curvature prior to the change."

***See* [29.2] ("providing light directed in the direction associated with the shape change from an LED not providing light directed in the direction associated with the shape change prior to the change.")**

187. These elements simply recite well known alternatives for increasing the light toward the road curvature [7.1]/[18.1]/[29.1], [7.2]/[18.2]/[29.2]. The light can be increased by (1) increasing the intensity of the lights [7.3]/[18.3], or (2) increasing the number of lights that are "on" that are directed toward the road curvature [7.4]/[18.4]/[29.2]. These basic alternatives are disclosed by the Beam-Kobayashi combination.

188. The combined Beam-Kobayashi system increases light and intensity in the direction of the curvature, prior to the curve [7.1]/[18.1]/[29.1], [7.2]/[18.2]/[29.2]. EX1005, 14:53-15:28, FIG. 10. *See also* Sections X.A.1, X.A.7, X.A.8, X.B.2, X.B.3. As described above, Beam's system uses input "information to *control the intensity, and/or the angular position*, of one or more

narrow-angle microbeams." EX1005, Abstract. Beam's "controller 108 include[ing] processor 1105…uses appropriate algorithms on the incoming data to determine," which LEDs to control [7.3]/[18.3], [7.4]/[18.4]/[29.2]. EX1005, 5:33-54.

189. With Kobayashi's map data functions as additional input for controlling the LEDs, the combined system renders the claimed features obvious. *See above*, X.A.1. Put simply, in Beam's AABH unit "[t]he angular position or attenuation," of each LED is independently set by the controller 108. EX1005, 4:44-48. Thus, Beam varies at least intensity of individual LEDs of the first plurality of LED light sources.

190. Further, and alternatively, Beam's system shows (and thus the combined Beam-Kobayashi system shows) that it is configured to provide light in the direction of the road curvature from an LED not providing light in the direction of the road curvature prior to the change, as evidenced by the individual control of its LEDs and blanking system described below.

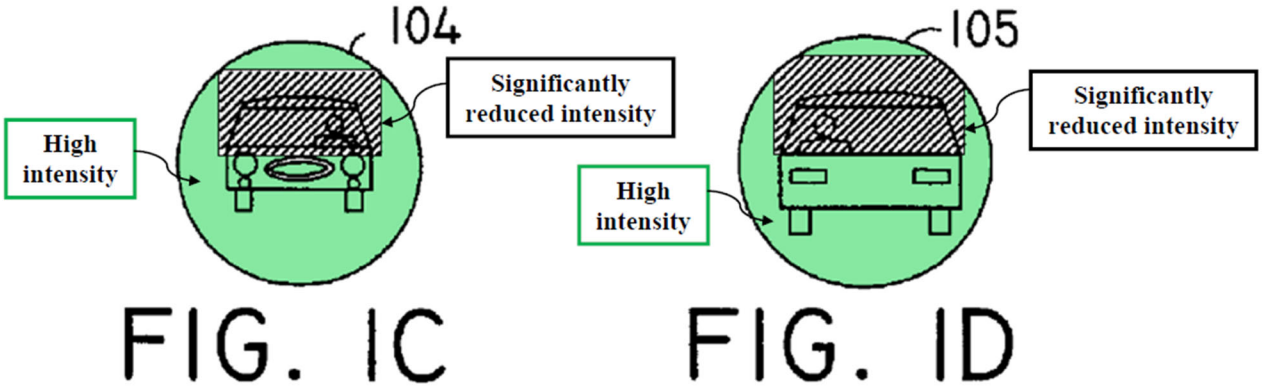

EX1005, FIGS. 1C and 1D (annotated).

191. Sensed inputs into controller 108 result in significant illumination intensity reduction in a specific section (shaded area). EX1005, 4:10-25. Such inputs are used to "*control the intensity, and/or the angular position*, of one or more" LEDs. EX1005, Abstract. Beam's processor 1105 (*see* EX1005, 5:34-36) as used in controller 108 uses appropriate algorithms on the incoming data to determine the LEDs to be controlled, e.g., blanked, rendering obvious that a specific LED used in one situation (e.g., a first straightaway or first curve) but not in another situation (e.g., a further curve beyond the first straightaway/curve) [7.3]/[18.3], [7.4]/[18.4]/[29.2]. EX1005, 5:33-54, FIG. 7.

192. As I have explained throughout this declaration, e.g., above in Section VIII.A., arrays of independently controlled narrow-beam directional light sources, for example, light-emitting diode (LED) arrays, were developed with sufficient illuminance, directionality, and dynamic control as an alternative to traditional incandescent and gas discharge bulbs to provide adaptive light patterns and real-time feedback. EX1005, 1:5-3:44, 4:9-59; EX1010, 1:10-26, 9:18-26, 20:29-32; EX1015, 6-18, 21; EX1009, 16:6-25, 20:15-33.

193. And as I explained, for example, in Section VIII.A., such adaptive light control was well known. *See*, *e.g.*, EX1015, 3-6; EX1016, 1-19; EX1023, 514-515; EX1024, 819. EX1018, 33-36 ("A new light concept called Adaptive

Light Control (ALC) is developed with the aim to improve night time traffic safety."); EX1019, 1-2 ("A major breakthrough in improving visibility, safety and comfort under all driving conditions is given by a headlamp with adjustable light intensity and beam pattern according to the vehicle speed, steering wheel angles and different driving conditions."); EX1020, 368, 370, 374-378 ("The car's sensors analyze and evaluate the driving situation and generate a light distribution that is adapted to that particular situation. In this process, not only the driver's comfort is increased but the visibility is improved also. This has a direct positive impact on traffic safety."); EX1024, 819 ("The challenge of such a system approach and the necessary and not so easy change towards performance and system requirements was clearly seen - but also the prospects of possible safety improvement."); EX1025, 202 ("One explanation could be that because of the available luminous flux in direction of driving, the driver has the ability to recognize the subsequent direction peripherally and can fixate other interesting objects in the road area. With other words the driver has more time for driving and the tiredness of the eyes could be reduced."); EX1028, 844 ("The driver's comfort and safety can be improved considerably by adaptive motor vehicle headlighting, with the today's technical means in lighting design and manufacturing, as well as sensors and communication systems in cars."). And it was well known that adaptive lighting used multiple directional light sources (e.g., multiple directional beams, such as light modules or

beam contributors) to produce an adaptive light pattern by varying illumination characteristics including beam intensity, beam shape, beam color, beam direction around curved roads, and glare reduction. EX1017, 3-10 ("[A] curve or an intersection can be adaptively illuminated before reaching actually the point when the steering wheel is turned or the turn indicator is operated."); EX1018, 33-36 ("The advantage of using Adaptive Light Control is shown in Fig. 5, where one observes a country road lit correctly. Instead of illuminating some fields or trees, the available light is directed dynamically in the direction where it is actually needed, enhancing the visual information for the driver."); EX1019, 1-2 ("A major breakthrough in improving visibility, safety and comfort under all driving conditions is given by a headlamp with adjustable light intensity and beam pattern according to the vehicle speed, steering wheel angles and different driving conditions."); EX1020, 368, 370, 374-378 ("The results show, that significant improvements can be proven by the adaptive headlamp system, without generating additional glare for oncoming traffic").

194. Claim 7 depends from claim 1. Claim 18 depends from claim 12. Claim 29 depends from claim 23.

195. Dependent claims 7 and 18 recite that "the increase of light in the direction of the road curvature includes at least one of expansion of the light pattern in the direction of the road curvature or an increase to intensity of light

directed in the direction of the road curvature." Dependent claim 29 varies slightly, and recites that "the increase of light in the direction associated with the shape change includes at least one of expansion of the light pattern in the direction associated with the shape change or an increase to intensity of light directed in the direction associated with the shape change." Again, as with elements discussed above, dependent claims 7 and 18 recite a type of shape change ("road curvature"), and thus there is no patentable difference between these limitations, and the same prior art references are applied to these limitations as provided in the analysis above.

196. Dependent claims 7 and 18 recite that "the determination of the light change includes determination of light changes to individual LEDs of the first plurality of LED light sources" and that one of the changes includes "a variation to at least one of intensity or color of individual LEDs of the first plurality," or "providing light directed in the direction of the road curvature from an LED not providing light directed in the direction of the road curvature prior to the change." Dependent claim 29 varies slightly recites that "the determining the light output includes determining output for individual LEDs of the first plurality of LED light sources, the output including providing light directed in the direction associated with the shape change from an LED not providing light directed in the direction associated with the shape change prior to the change." As above, a *determined*

"light change" subsumes the *determining* of a "light output," and the adapting of a light pattern of headlamps in the claims indicates that there is no patentable difference between these limitations. And while dependent claims 7 and 18 rely on a type of shape change ("road curvature"), there is no patentable difference between these limitations. Thus, the same prior art references are applied to these limitations as provided in the analysis above.

197. In view of the above, as combined, claims 7, 18, and 29 are rendered obvious by the Beam-Kobayashi combination.

7. [8.1]: "further comprising one or more cameras positioned to capture data indicating at least one other vehicle ahead of the motor vehicle;"

***See* [19.2] ("captured by at least one camera of the motor vehicle")**

***See* [30.2] ("captured by at least one camera of the motor vehicle")**

198. Beam discloses this feature, which more simply put, uses camera data to detect another vehicle as in claim element [8.1] (as well as in claim elements [19.2]/[30.2]. Beam describes that such a camera "faces forward, boresighted with the headlight." EX1005, 6:12-14, 4:10-36, 7:37-40, and FIGS. 1, 2, 5. Beam's sensor 107—which can specifically be a video *camera*—detects the headlights of an oncoming vehicle 102 and/or taillights of a preceding vehicle 103. EX1005, 4:10-32*; see also* EX1005, 7:37-40. So Beam's camera "capture[s] data indicating at least one other vehicle ahead of the motor vehicle," [8.1] as claimed.

[8.2]: "wherein the instructions include instructions that, when executed by the one or more processors, enable the one or more processors to:"

[19.1]: "wherein the instructions include instructions that, when executed by the one or more processors, enable the one or more processors to:"

[30.1]: (no corresponding element due to claim 23 not expressly reciting processor(s), in claim 23: a computer-implemented method)

[8.3]: "determine a position associated with the at least one other vehicle based at least in part on second data captured by at least one of the one or more cameras; and"

[19.2]: "determine a position associated with at least one other vehicle based at least in part on second data indicating the at least one other vehicle and captured by at least one camera of the motor vehicle; and"

[30.2]: "determining a position associated with at least one other vehicle based at least in part on second data indicating the at least one other vehicle and captured by at least one camera of the motor vehicle; and"

[8.4]: "control, based at least in part on the position, a second plurality of LED light sources providing light directed towards an area including at least a portion of the other vehicle to diminish glare to a driver of the other vehicle by a decrease to intensity of light directed towards and illuminating the area, the light that is directed towards and illuminating the area having lower intensity compared to light directed towards points laterally adjacent the area to either side."

[19.3]: "control, based at least in part on the position, a second plurality of LED light sources providing light directed towards an area including at least a portion of the other vehicle to diminish glare to a driver of the other vehicle by a decrease to intensity of light directed

towards and illuminating the area, the light that is directed towards and illuminating the area having lower intensity compared to light directed towards points laterally adjacent the area to either side."

[30.3]: "controlling, based at least in part on the position, a second plurality of LED light sources providing light directed towards an area including at least a portion of the other vehicle to diminish glare to a driver of the other vehicle by decreasing intensity of light directed towards and illuminating the area, the light directed towards and illuminating the area having lower intensity compared to light directed towards points laterally adjacent the area to either side."

199. This "instructions" [8.2]/[19.1]/[30.1] sub-element recites that the processor can use the camera [8.1] data and instructions to *determine* the position of another vehicle [8.3]/[19.2]/[30.2] and then *control* the LEDs to diminish glare to the other driver [8.4]/[19.3]/[30.3]. Such instructions were well known in the art, as demonstrated below.

200. Beam's sensor 107 (i.e., camera) detects an oncoming vehicle 102 and/or taillights of a preceding vehicle 103 in a subsection (shaded area) of the field-of-view (e.g., scene 101) of Beam's AABH unit and controller 108 significantly reduces an illumination intensity in that subsection (shaded area)

[8.2]/[19.1]/[30.1], [8.3]/[19.2]/[30.2], [8.4]/[19.3]/[30.3]. EX1005, 4:10-25.

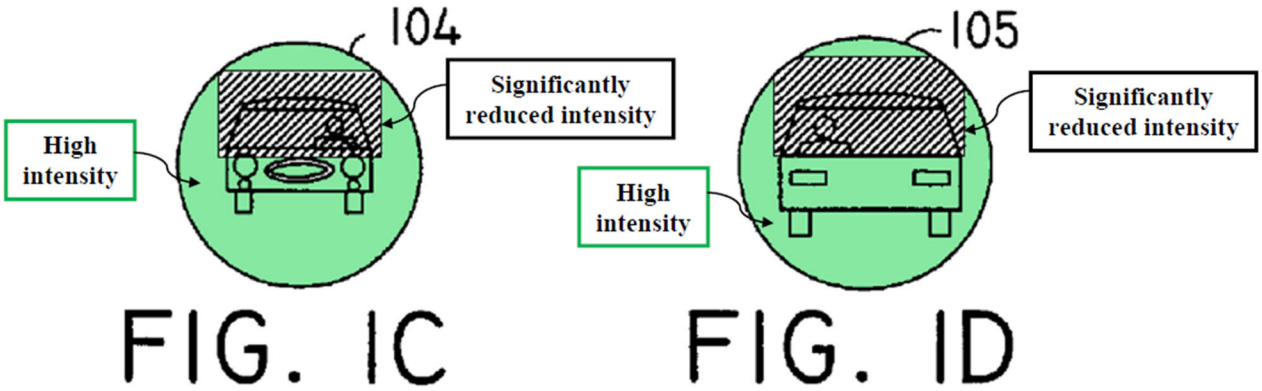

EX1005, FIGS. 1C and 1D (annotated).

201. Beam's controller 108 thus uses the data from the camera to (1) *determine the position of the vehicle* [8.3]/[19.2]/[30.2], and (2) *control the LEDs to diminish glare* to the other driver [8.4]/[19.3]/[30.3].

> *When an oncoming vehicle's headlights are detected* (whether or not it is equipped with the AABH system), *an area slightly wider than the headlight spacing and approximately six feet high, and whose bottom edge is centered on the oncoming headlights, is dimmed in the beam-bundle of the vehicle equipped with the AABH system*. As the positions of both vehicles move, the *blanked area tracks the location of the oncoming vehicle, dynamically varying in position and in size*.
> EX1005, 6:19-27; *see also* EX1005, 2:59-3:3.

202. Thus, the Beam-Kobayashi combined system uses camera data to detect another vehicle and control the LEDs to provide an area of decreased light intensity to reduce glare for the other driver, as the claims recite.

203. And as I have explained, for example above in Section VIII.A., such anti-glare or glare reduction features were well known. *See*, *e.g.*, EX1017, FIGS. 1-3, 5; EX1009, 6:4-7; 16:6-25, 20:15-33 ("According to an aspect of some embodiments of the present invention, the pattern recognition application identifies oncoming vehicles and automatically adjusts illumination provided by the luxels to prevent glare from light provided by the luxels from blinding a driver of the oncoming vehicle.").

204. Claim 8 depends from claim 1. Claim 19 depends from claim 12. Claim 30 depends from claim 23.

205. Dependent claim 8 recites that the system further comprises "one or more cameras positioned to capture data indicating at least one other vehicle ahead of the motor vehicle," and the one or more processors "determine a position associated with the at least one other vehicle based at least in part on second data captured by at least one of the one or more cameras." Dependent claims 19 and 30 recite determining "a position associated with at least one other vehicle based at least in part on second data indicating the at least one other vehicle and captured by at least one camera of the motor vehicle." There is no patentable difference between these limitations, and the same prior art references are applied to these limitations as provided in the analysis above.

206. In view of the above, as combined, claims 8, 19, and 30 are rendered obvious by the Beam-Kobayashi combination.

8. [9.1]/[20.1]/[31.1]: "wherein:"

[9.2]/[20.2]/[31.2]: "the first plurality and second plurality of LED light sources include at least one common LED light source;"

[9.3]/[20.3]: "the control of the second plurality of LED light sources is based at least in part on third data received from a non-camera sensor of the motor vehicle;"

[31.3]: "the controlling the second plurality of LED light sources is based at least in part on third data received from a non-camera sensor of the motor vehicle;"

[9.4]/[20.4]/[31.4]: "the position includes at least one of:

a distance associated with the at least one other vehicle,

at least one elevation associated with the at least one other vehicle, or

a position within image data captured by at least one of the cameras;"

[9.5]/[20.5]/[31.5]: "the first data includes data from a non-camera sensor of the motor vehicle;"

[9.6]/[20.6]: "either one of the control of the first plurality of LED light sources or control of the second plurality of LED light sources is subsequent to and accommodative of the other;"

[31.6]: "either one of the determining the light output or controlling the second plurality of LED light sources is subsequent to and accommodative of the other;"

[9.7]/[20.7]: "the control of the second plurality of LED light sources additionally includes termination of light from at least one LED providing light directed to the area prior to the termination; and"

[31.7]: "the controlling the second plurality of LED light sources additionally includes terminating light from at least one LED providing light directed to the area prior to the terminating; and"

[9.8]/[20.8]/[31.8]: "the light pattern includes at least one of an illumination pattern or an emission pattern of the headlamps."

207. These claims recite well known concepts. At least one LED is common to both the first and second pluralities of LEDs [9.1]/[20.1]/[31.1], [9.2]/[20.2]/[31.2]. The second plurality of LEDs is controlled based at least in part on third data received from a *non-camera sensor* [9.3]/[20.3]/[31.3], and the first data includes data from a *non-camera* sensor [9.5]/[20.5]/[31.5]. *See*, *e.g.*, EX1008, Abstract, 1:10-63; EX1005, Abstract, 5:33-54, 4:46-48. Kobayashi's map data is *not* from a camera sensor (among other examples in both Beam and Kobayashi), and thus in combination with Beam meets this portion of the feature related to both first and third data from a *non-camera* sensor.

208. Additionally, controlling the second plurality of LEDs includes terminating light from an LED providing light directed to the area–simply turning an LED off [9.7]/[20.7]/[31.7], and controls an illumination pattern or an emission pattern of the headlamps [9.8]/[20.8]/[31.8]. *See*, *e.g.*, EX1005, Abstract, 5:33-54, 4:46-48, FIG. 14. Combined with Kobayashi's map data functions, this feature is rendered obvious, since selective LED control—e.g., turning them on and off—is expressly disclosed in Beam. Beam's system "*control[s] the intensity, and/or the*

angular position, of one or more" LEDs via "controller 108 include[ing] processor 1105 that uses appropriate algorithms on the incoming data to determine the locations to be blanked" (terminated/turned off). EX1005, Abstract, 5:33-54. Put simply, Beam's AABH unit explicitly discloses "[t]he angular position or attenuation of each of these microbeams is independently set by the controller 108," which includes termination. EX1005, 4:46-48. These disclosures cover [9.1]/[20.1]/[31.1], [9.2]/[20.2]/[31.2], [9.7]/[20.7]/[31.7], and [9.8]/[20.8]/[31.8].

209. The Beam-Kobayashi combined system's iterative nature provides that control of the first and second LED light sources is subsequent to and accommodative of the other [9.6]/[20.6]/[31.6]. Beam's controller 107 as modified by Kobayashi's ECU 10 allows for processor 1105 (that uses appropriate algorithms on the incoming data) to determine the locations to be blanked—*accommodating both map data from a non-camera sensor (GPS or beacon data) and the camera-based AABH function* of Beam. EX1005, 5:33-54; EX1008, Abstract, 1:10-2:35, 4:60-64, FIGS. 1, 10, 12.

210. Finally, Beam discloses at least one of the alternate properties of "the position" [9.4]/[20.4]/[31.4] (determined and associated with the other vehicle, as discussed above, Section X.B.7.). Specifically, Beam discloses that the position includes at least a position within image data captured by the camera. EX1005, 2:59-3:3; 5:46-54, 4:10-25, FIGS. 1C and 1D, 5:33-54. Beam's camera detects the

headlights of an oncoming vehicle 102 and/or taillights of a preceding vehicle 103, in such a position within the image data captured. EX1005, 4:10-32*; see also* EX1005, 7:37-40; *see also* Sections X.A, X.B.1.–X.B.7, above.

211. And as I explained, for example, in Section VIII.A., such adaptive light control was well known. *See*, *e.g.*, EX1015, 3-6; EX1016, 1-19; EX1023, 514-515; EX1024, 819. EX1018, 33-36 ("A new light concept called Adaptive Light Control (ALC) is developed with the aim to improve night time traffic safety."); EX1019, 1-2 ("A major breakthrough in improving visibility, safety and comfort under all driving conditions is given by a headlamp with adjustable light intensity and beam pattern according to the vehicle speed, steering wheel angles and different driving conditions."); EX1020, 368, 370, 374-378 ("The car's sensors analyze and evaluate the driving situation and generate a light distribution that is adapted to that particular situation. In this process, not only the driver's comfort is increased but the visibility is improved also. This has a direct positive impact on traffic safety."); EX1024, 819 ("The challenge of such a system approach and the necessary and not so easy change towards performance and system requirements was clearly seen - but also the prospects of possible safety improvement."); EX1025, 202 ("One explanation could be that because of the available luminous flux in direction of driving, the driver has the ability to recognize the subsequent direction peripherally and can fixate other interesting objects in the road area. With

other words the driver has more time for driving and the tiredness of the eyes could be reduced."); EX1028, 844 ("The driver's comfort and safety can be improved considerably by adaptive motor vehicle headlighting, with the today's technical means in lighting design and manufacturing, as well as sensors and communication systems in cars."). And it was well known that adaptive lighting used multiple directional light sources (e.g., multiple directional beams, such as light modules or beam contributors) to produce an adaptive light pattern by varying illumination characteristics including beam intensity, beam shape, beam color, beam direction around curved roads, and glare reduction. EX1017, 3-10 ("[A] curve or an intersection can be adaptively illuminated before reaching actually the point when the steering wheel is turned or the turn indicator is operated."); EX1018, 33-36 ("The advantage of using Adaptive Light Control is shown in Fig. 5, where one observes a country road lit correctly. Instead of illuminating some fields or trees, the available light is directed dynamically in the direction where it is actually needed, enhancing the visual information for the driver."); EX1019, 1-2 ("A major breakthrough in improving visibility, safety and comfort under all driving conditions is given by a headlamp with adjustable light intensity and beam pattern according to the vehicle speed, steering wheel angles and different driving conditions."); EX1020, 368, 370, 374-378 ("The results show, that significant

improvements can be proven by the adaptive headlamp system, without generating additional glare for oncoming traffic").

212. As I have explained throughout this declaration, e.g., above in Section VIII.A., arrays of independently controlled narrow-beam directional light sources, for example, light-emitting diode (LED) arrays, were developed with sufficient illuminance, directionality, and dynamic control as an alternative to traditional incandescent and gas discharge bulbs to provide adaptive light patterns and real-time feedback. EX1005, 1:5-3:44, 4:9-59; EX1010, 1:10-26, 9:18-26, 20:29-32; EX1015, 6-18, 21; EX1009, 16:6-25, 20:15-33.

213. And as explained in Section VIII.A., such control using map data, e.g., GPS data, was well known. EX1025, 186; EX1026, 461-462 ("To obtain more accurate information on driving regions, it is advantageous to use data from a GPS navigation system."); EX1024, 815-816; EX1023, 514-515, 525; EX1027, Abstract; EX1023, 524 (Table 1 showing increased visibility along straight and curved roads with adaptive headlight systems); EX1025, 202, 205-206 ("[B]ecause of the available luminous flux in direction of driving, the driver has the ability to recognize the subsequent direction peripherally and can fixate other interesting objects in the road area."); EX1026, 451-452.

214. And as I have explained, for example above in Section VIII.A., such anti-glare or glare reduction features were well known. *See*, *e.g.*, EX1017, FIGS. 1-

3, 5; EX1009, 6:4-7; 16:6-25, 20:15-33 ("According to an aspect of some embodiments of the present invention, the pattern recognition application identifies oncoming vehicles and automatically adjusts illumination provided by the luxels to prevent glare from light provided by the luxels from blinding a driver of the oncoming vehicle.").

215. Claim 9 depends from claim 8, which in turn depends from claim 1. Claim 20 depends from claim 19, which in turn depends from claim 12. Claim 31 depends from claim 30, which in turn depends from claim 23.

216. Dependent claims 9 and 20 recite that "either one of the control of the first plurality of LED light sources or control of the second plurality of LED light sources is subsequent to and accommodative of the other." Dependent claim 31 recites that "either one of the determining the light output or controlling the second plurality of LED light sources is subsequent to and accommodative of the other." There is no patentable difference between these limitations, and the same prior art references are applied to these limitations as provided in the analysis above.

217. In view of the above, as combined, claims 9, 20, and 31 are rendered obvious by the Beam-Kobayashi combination.

9. [10]: "further including one or more optical control elements for controlling light from one or more of the LED light sources."

[21]: "wherein the instructions include instructions that, when executed by the one or more processors, enable the one or more processors to utilize one or more optical control elements included in the motor vehicle to control light from at least the first plurality or second plurality of the LED light sources."

[32]: "utilizing one or more optical control elements included in the motor vehicle to control light from at least the first plurality or second plurality of the LED light sources."

218. Beam discloses this feature with at least beamsplitter 201 and spatial light modulator 203. Beam further discloses at least *reflectors* and *lenses* to control the light from at least one of the microbeams (e.g., emanating from its LEDs). EX1005, 4:26-59, 5:17-21, 8:4-12, FIGS. 2 and 5, 1:61-2:6. These are all examples of optical control elements for controlling the LED light.

219. Kobayashi, too, discloses controlling emitted light with reflecting mirrors, lens, shielding member, etc. *See*, *e.g.*, EX1008, 6:20-23.

220. Claim 10 depends from claim 1. Claim 21 depends from claim 19, which in turn depends from claim 12. Claim 32 depends from claim 30, which in turn depends from claim 23.

221. Dependent claim 10 recites that the system further includes "one or more optical control elements for controlling light from one or more of the LED light sources." Dependent claim 21 recites that the one or more processors "utilize

one or more optical control elements included in the motor vehicle to control light from at least the first plurality or second plurality of the LED light sources." Dependent claim 32 recites "utilizing one or more optical control elements included in the motor vehicle to control light from at least the first plurality or second plurality of the LED light sources." There is no patentable difference between these limitations, and the same prior art references are applied to these limitations as provided in the analysis above.

222. In view of the above, as combined, claims 10, 21, and 32 are rendered obvious by the Beam-Kobayashi combination.

10. [11]/[22]/[33]: "wherein the optical control elements include at least one of one or more reflectors, refractors or lenses."

223. These features are disclosed in Beam (and Kobayashi) as discussed above in Section X.B.9.

224. Beam discloses this feature with at least beamsplitter 201 and spatial light modulator 203. Beam further discloses at least *reflectors* and *lenses* to control the light from at least one of the microbeams (e.g., emanating from its LEDs). EX1005, 4:26-59, 5:17-21, 8:4-12, FIGS. 2 and 5, 1:61-2:6. These are all examples of optical control elements for controlling the LED light.

225. Kobayashi, too, discloses controlling emitted light with reflecting mirrors, lens, shielding member, etc. *See*, *e.g.*, EX1008, 6:20-23.

226. Claim 11 depends from claim 10, which in turn depends from claim 1. Claim 22 depends from claim 21, which in turn depends from claim 19, which in turn depends from claim 12. Claim 33 depends from claim 32, which in turn depends from claim 30, which in turn depends from claim 23.

227. In view of the above, as combined, claims 11, 22, and 33 are rendered obvious by the Beam-Kobayashi combination.

228. Thus, the Beam-Kobayashi combination renders obvious all claims in the ’029 patent, rendering the ’029 patent unpatentable.

XI. GROUND 2: THE COMBINATION OF GOTOU AND KARLSSON RENDERS OBVIOUS CLAIMS 1-33.

229. As I have explained above, Ground 1 demonstrates why it would have been obvious to a POSA to modify an LED adaptive headlamp to utilize map data as a control input. Ground 2 demonstrates why it would have been equally obvious to a POSA to modify a map data input controlled adaptive headlamp to utilize LEDs as the light sources. Thus, claims 1-33 would have been obvious no matter how a POSA viewed the prior art. I turn now to Ground 2, and explain why it would have been obvious to a POSA to combine Gotou and Karlsson, which renders claims 1-33 obvious. For brevity, I do not repeat the claim dependency information, or minor variations in feature language here. *See* Section X, above.

A. Independent claims 1, 12, and 23

1. A POSA would have been motivated to combine Gotou and Karlsson with a reasonable expectation of success.

230. A POSA would have been motivated to combine Gotou's adaptive vehicle headlamp device that used map data as a control input to predict and adjust illumination direction with Karlsson's controllable LEDs as the headlamp/headlight light source for at least two reasons.

231. *First*, a POSA would have sought to use Karlsson's LEDs because of the well known benefits of LEDs in vehicle headlamps—for example, life expectancy and redundancy, adaptation under unfavorable weather, and low-voltage direct current operation. *See* EX1008, 13:67-14:13, 14:25-30, 2:30-35, 5:66-6:5; EX1011, 3:18-26, 10:21-22.

232. LED advantages were well known in the art. EX1029, 987, 991 ("The reason for this large scale conversion is the fact that high brightness LED's are offering a unique set of benefits such as lower power consumption, Long operating life, compact size, increased reliability and very low maintenance requirements depending on the application.").

233. Such arrays of independently controlled narrow-beam directional light sources, for example, light-emitting diode (LED) arrays, were developed with sufficient illuminance, directionality, and dynamic control as an alternative to traditional incandescent and gas discharge bulbs to provide adaptive light patterns

and real-time feedback. EX1005, 1:5-3:44, 4:9-59; EX1010, 1:10-26, 9:18-26, 20:29-32; EX1015, 6-18, 21; EX1009, 16:6-25, 20:15-33.

234. *Second*, Karlsson's controllable LEDs (and camera-based glare reduction system) would have simplified controlling the illumination direction and beam shape by removing Gotou's complex moving parts (e.g., motors), while at the same time providing expanded beam shaping abilities.

235. To the first point, there are several examples of prior art that shows that LEDs "are advantageously used as light sources" in headlamps, for example, in Muller. EX1022, 2:22-26. Muller explains that "[s]uch light-emitting diodes are very reliable and may…be mounted in locations which are barely accessible after installation, e.g., in vehicle-part cavities, without being in any way disadvantageous." EX1022, 2:22-26. Further, because of the reliability of LEDs, "in contrast to conventional lamps, the lamp only needs to be changed very infrequently." EX1022, 2:22-26, 3:44-47. Many others also recognized the benefit of using LEDs as light sources for headlamps and other automotive applications well before the '029 patent's earliest possible priority date. *See*, *e.g.*, EX1005, 4:9-15, 6:9-12, 8:4-17; EX1006, ¶¶5, 7, 8, 20, 27; EX1009, 19:27-31, 20:9-12, 23:8-13; EX1010, 4:25-35, 13:24-29, 11:29-32; EX1011, 1:18-2:3, 3:18-26, 8:13-20, 10:6-11, 10:21-22; EX1029, 987, 991 ("The reason for this large scale conversion is the fact that high brightness LED's are offering a unique set of benefits such as

lower power consumption, Long operating life, compact size, increased reliability and very low maintenance requirements depending on the application.”).

236. Indeed, Harbers (EX1011) notes additional advantages: an array of LEDs meets the standard of luminous flux; there is no appreciable size difference in the overall headlamp packaging using such LEDs; the service life of LEDs is very long compared to conventional light sources (EX1011, 3:18-26); and LEDs may be adapted under unfavorable weather (EX1011, 10:6-11) and at a low-voltage direct current (EX1011, 10:21-22). Thus, the evolution from prior “conventional lamps” to LEDs as headlamp light sources would have been apparent to a POSA.

237. This natural evolution is evident in the combination of Gotou and Karlsson—the references are in the same field of automotive lighting, including adaptive headlamps, and disclose dynamic vehicle headlamps to increase illumination in a particular direction. And as in Ground 1, the building blocks of Gotou and Karlsson are the same. They include controllable headlamps, input sensors, controller(s) including processors and memory, to execute commands to control direction, shape, and/or intensity of the light emanating from the headlamps.

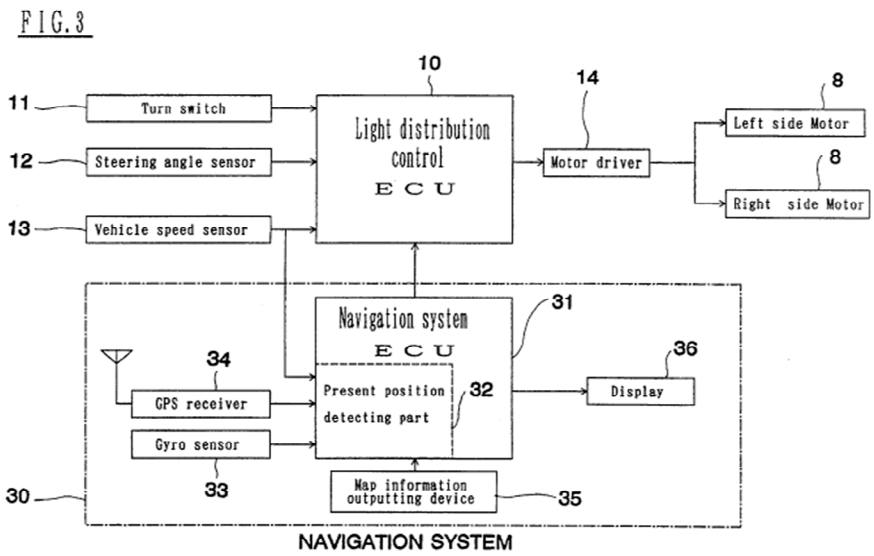

EX1012, FIG. 3.

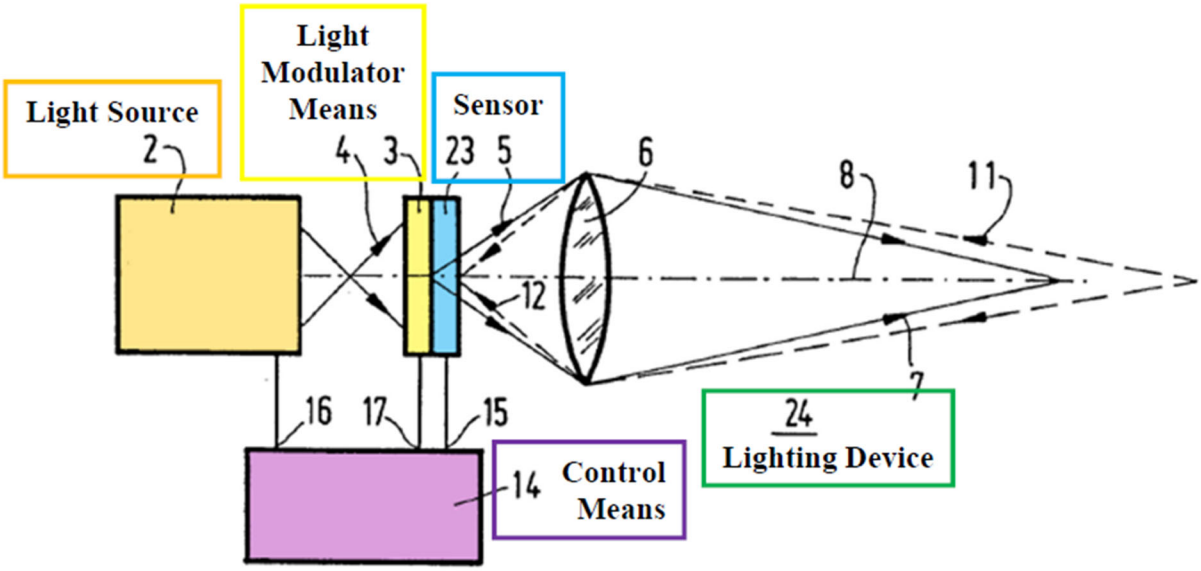

EX1010, FIG. 3 (annotated).

238. Beginning with Gotou, light distributing control ECU 10 receives *map data* from the navigation system 30, and the ECU 10 processes the data to determine optical axis angle θ, controlling motor driver 14 to achieve the optical axis angle θ. *See* EX1012, 3:52-67. Gotou provides additional details of the

navigation system 30, including the GPS receiver 34, for example at EX1012, 4:1-29.

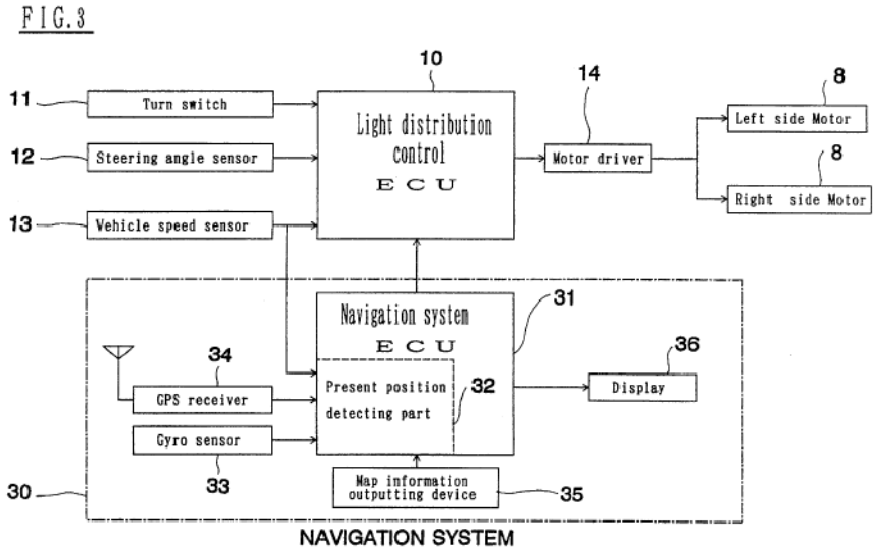

EX1012, FIG. 3.

See also EX1012, 5:8-6:3, 6:18-7:4, FIGS. 4 and 7.

FIG. 4

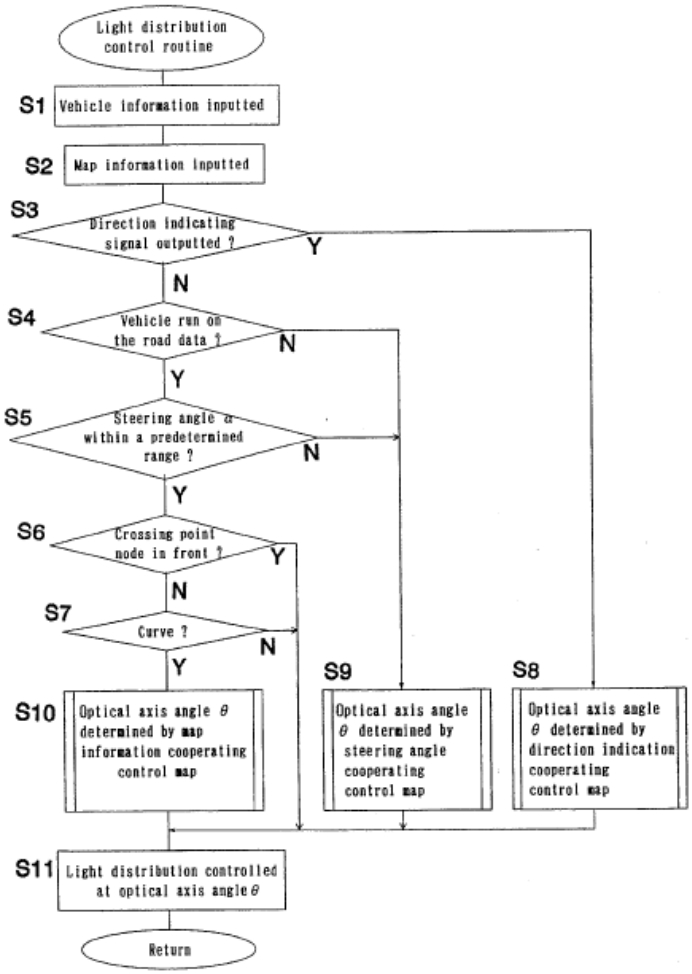

EX1012, FIG. 4.

FIG.7

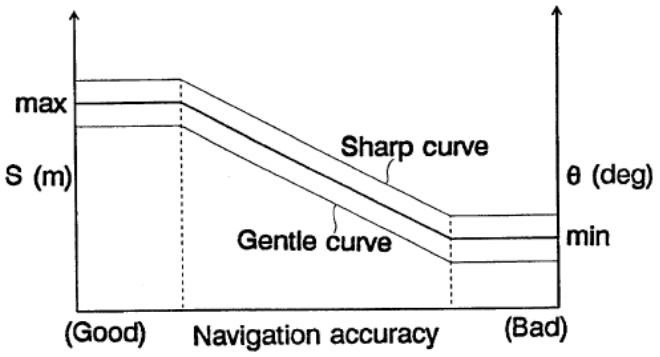

EX1012, FIG. 7.

239. While Gotou does not expressly disclose that its lamp units 4 include LEDs—a technology well known to be used as headlamps—it *does describe that plural bulbs* may be installed in one head light and the light distribution is changed by "separately using one bulb illumination and two-bulb illumination, respectively." EX1012, 8:15-19.

240. Karlsson, in turn, expands on this control of plural light sources, specifically describing benefits of an individually controllable grid of separate light sources (*LEDs*) for controlling the light direction. *See* EX1010, 14:1-15, 14:26-30, 2:30-35, 6:1-5. It would have been obvious to a POSA to use Karlsson's LEDs in Gotou's system to improve driving safety in an efficient, compact manner and with automatic sensitivity, taking advantage of the well known advantages of LEDs specifically used as headlamp light sources. *See* EX1010, 14:1-15, 14:26-30, 2:30-35, 6:1-5; *see also* EX1005, 4:9-15, 6:9-12, 8:4-17; EX1006, ¶¶5, 7, 8, 20, 27;

EX1009, 19:27-29, 20:9-12, 23:8-12; EX1010, 4:25-35, 13:24-29, 11:29-32; EX1011, 1:18-2:3, 3:18-27, 8:13-20, 10:6-11, 10:21-22; EX1029, 987, 991.

241. To the second point, substituting Karlsson's controllable *LED* array and glare reduction features utilizing Karlsson's camera would have reduced the number of moving parts from Gotou's system, and at the same time expanded Gotou's plural bulb control. Thus, a POSA would have been motivated to make this obvious improvement, leading to a more compact system with fewer moving parts, and taking advantage of the well known benefits of LEDs as a controllable light source. *See*, *e.g.*, EX1022, 2:22-26, 3:44-47; *see also*, *e.g.*, EX1005, 4:9-15, 6:9-12, 8:4-17; EX1006, ¶¶5, 7, 8, 20, 27; EX1009, 19:27-29, 20:9-12, 23:8-12; EX1010, 4:25-35, 13:24-29, 11:29-32; EX1011, 1:18-2:3, 3:18-26, 8:13-20, 10:6-11, 10:21-22.

242. Karlsson itself recognizes such advantages of using LED light sources and associated controls—indeed, Karlsson's spotlight beams 34 come from of a grid of separate LEDs that can be controlled individually or in groups. *See* EX1010, 14:1-15, 14:26-30; 2:30-35; 6:1-5. Its headlight includes a spatial distribution of LEDs D, I, and D/I and spotlight sensors S. EX1010, 19:18-20:3. The resultant emitted light beam 50 is represented as a window that shifts in the plane from left to right and from top to bottom, based on the data from inputs to Karlsson's controller. EX1010, 19:18-20:3.

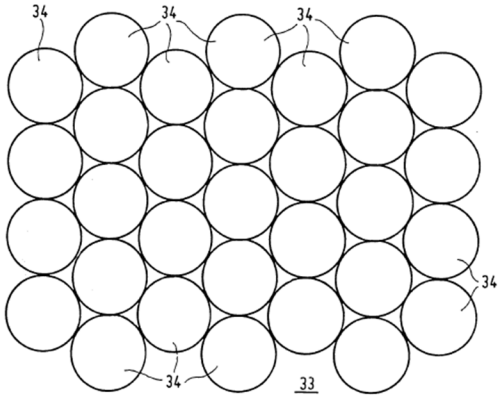

FIG. 6

EX1010, FIG. 6.

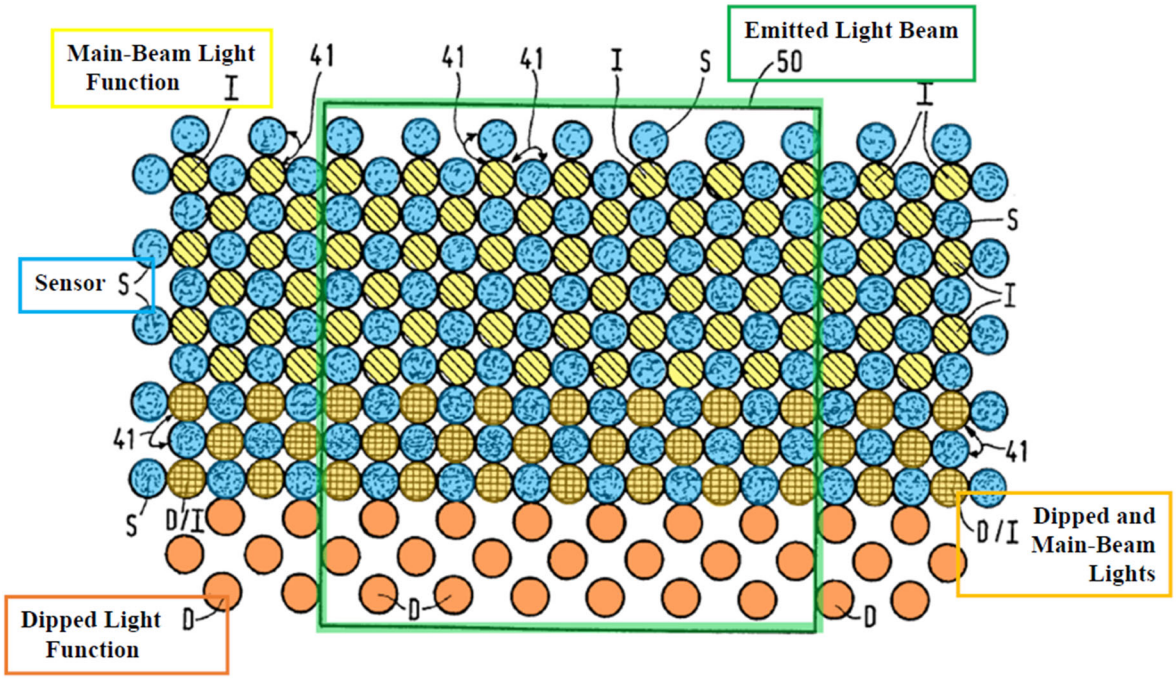

EX1010, FIG. 14 (annotated).

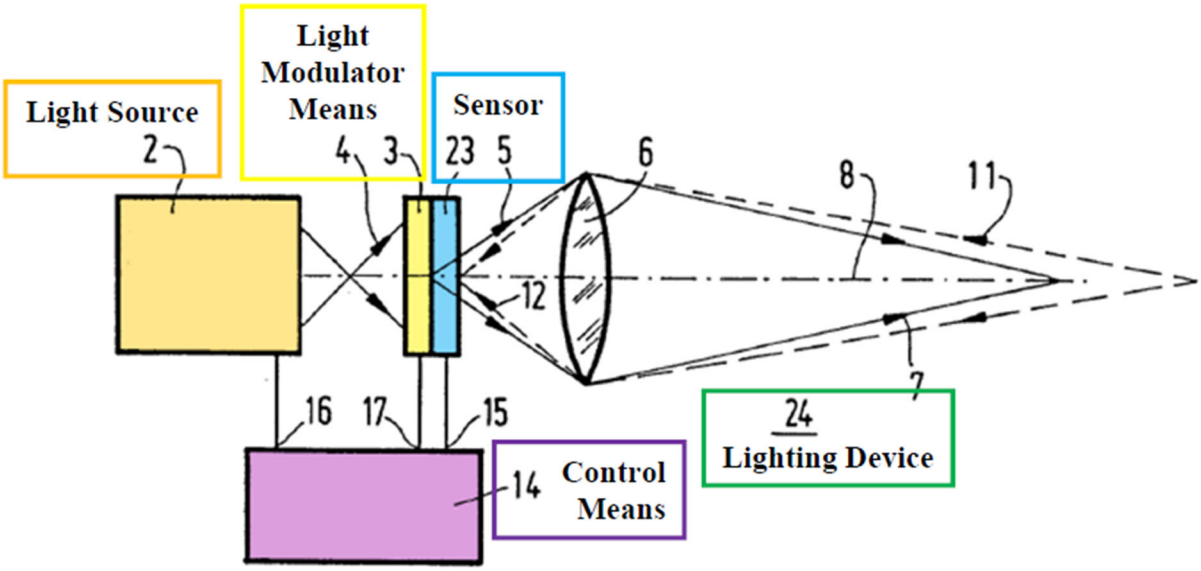

EX1010, FIG. 3 (annotated).

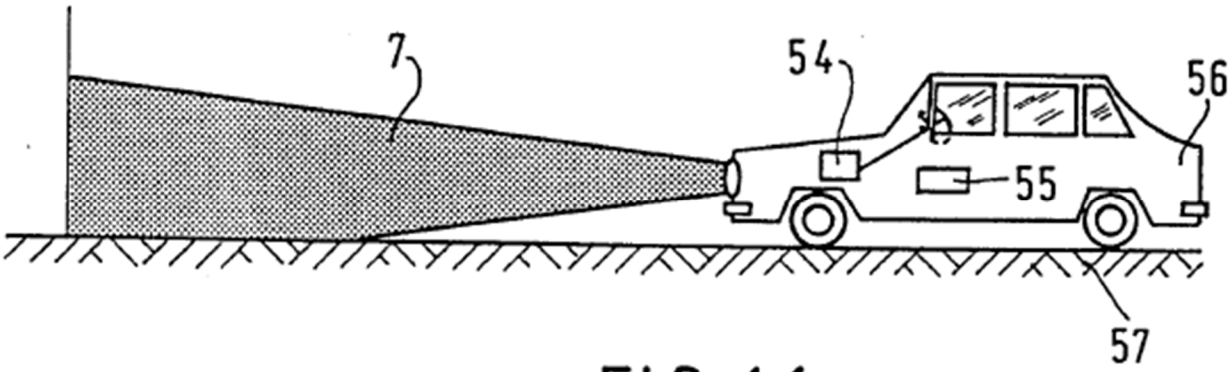

FIG.16

EX1010, FIG. 16.

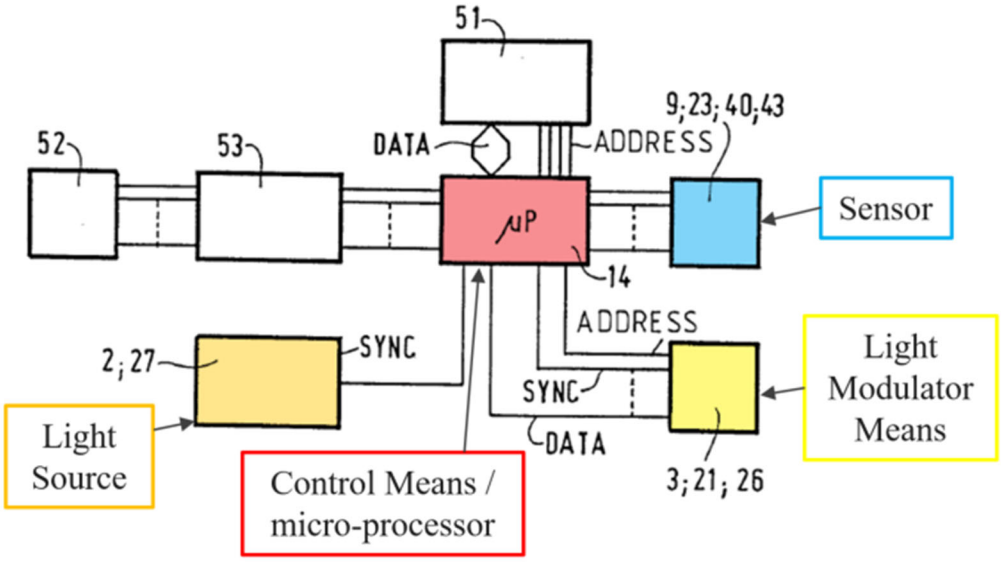

EX1010, FIG. 15 (annotated).

243. By implementing Karlsson's controllable LED arrays into Gotou's non-LED headlamp system, a POSA would have recognized Karlsson's additional control based on individualized LEDs. Indeed, Karlsson expressly recognized benefits of directional control using direction sensor 54. *See*, *e.g.*, EX1010, 20:22-32. Gotou's use of GPS map data suggests the advantages of changing and controlling the direction of headlamps, and Karlsson's LED array makes that specific control easier. *See*, *e.g.*, EX1012, 3:52-67, 4:1-29, 5:8-6:3, 6:18-7:4, 8:15-19, and FIGS. 4, 7, 12; EX1010, 14:1-15, 14:26-30; 2:30-35; 6:1-5; EX1023, 525 ("The introduction of data coming from accurate navigation systems comes as a first logical consequence. This predictive system would make possible to anticipate

the needed light distribution avoiding dangerous changes in the beam during critical driving conditions such as curves and crossing”).

244. The combination would have merely been substituting Karlsson’s known controllable LED arrays to control the shape and/or intensity of headlights for Gotou’s similar, known control of a non-LED headlamp, in the same way. It would have been a simple substitution of one known element (Gotou’s directional headlamp control via motor) for another (Karlsson’s directional headlamp control via LED arrays). *See*, *e.g.*, EX1022, 2:22-26, 3:44-47 (describing the reliability of LEDs as compared to alternative light sources). A POSA would have also understood that Karlsson’s directional LED input and control technique would have been combined in a known way to provide the predictable benefits disclosed in both Karlsson and Gotou.

245. Moreover, such a modification would have been simply applying a known technique (Karlsson’s light shape control via an LED array) to a known device ready for improvement (Gotou’s headlamp using a motor to swing lamp units in a horizontal direction) with predictable results.

246. A POSA would have had a reasonable expectation of success combining Gotou and Karlsson. Indeed, a POSA would have understood how to combine the teachings of Gotou and Karlsson by simply substituting Gotou’s system, with Karlsson’s LED array and control, as shown, for example, in

Karlsson's Figure 14, as Karlsson's method presents and advanced and more active execution of varying headlamp light output (direction, shape, intensity, etc.).. This would have been routine and well within the skill of a POSA due to the similarities in Gotou's and Karlsson's adaptive light control systems and methods.

247. Such a modification would have been nothing more than substituting known prior art elements (e.g., Gotou's non-LED light sources and the motion execution mechanism), with Karlsson's directional-controllable LED headlamps) according to known methods (disclosed in Karlsson) to yield predictable results (e.g., improved longevity and reliability of LED light sources as compared to other light sources, etc.). Karlsson's known technique of individualized LED control is fully described along with its benefits, such that it would have been obvious to a skilled artisan to apply to similar systems, such as Gotou's GPS-enabled adaptive headlamp system, in the same way. A POSA would have had a reasonable expectation of success in combining a controllable LED array headlamp, as disclosed by Karlsson, in the context of the Gotou's adaptive vehicle headlamp, at least because it was well known in the field to use LEDs to control illumination of a headlight (e.g., intensity, shape, and/or angular position), improve driving safety, in an efficient manner and with automatic sensitivity. *See* EX1010, 14:1-15, 14:26-30; 2:30-35, 6:1-5.

248. And as I explained, for example, in Section VIII.A., such adaptive light control was well known. *See*, *e.g.*, EX1015, 3-6; EX1016, 1-19; EX1023, 514-515; EX1024, 819. EX1018, 33-36 ("A new light concept called Adaptive Light Control (ALC) is developed with the aim to improve night time traffic safety."); EX1019, 1-2 ("A major breakthrough in improving visibility, safety and comfort under all driving conditions is given by a headlamp with adjustable light intensity and beam pattern according to the vehicle speed, steering wheel angles and different driving conditions."); EX1020, 368, 370, 374-378 ("The car's sensors analyze and evaluate the driving situation and generate a light distribution that is adapted to that particular situation. In this process, not only the driver's comfort is increased but the visibility is improved also. This has a direct positive impact on traffic safety."); EX1024, 819 ("The challenge of such a system approach and the necessary and not so easy change towards performance and system requirements was clearly seen - but also the prospects of possible safety improvement."); EX1025, 202 ("One explanation could be that because of the available luminous flux in direction of driving, the driver has the ability to recognize the subsequent direction peripherally and can fixate other interesting objects in the road area. With other words the driver has more time for driving and the tiredness of the eyes could be reduced."); EX1028, 844 ("The driver's comfort and safety can be improved considerably by adaptive motor vehicle headlighting, with the today's technical

means in lighting design and manufacturing, as well as sensors and communication systems in cars.”). And it was well known that adaptive lighting used multiple directional light sources (e.g., multiple directional beams, such as light modules or beam contributors) to produce an adaptive light pattern by varying illumination characteristics including beam intensity, beam shape, beam color, beam direction around curved roads, and glare reduction. EX1017, 3-10 (“[A] curve or an intersection can be adaptively illuminated before reaching actually the point when the steering wheel is turned or the turn indicator is operated.”); EX1018, 33-36 (“The advantage of using Adaptive Light Control is shown in Fig. 5, where one observes a country road lit correctly. Instead of illuminating some fields or trees, the available light is directed dynamically in the direction where it is actually needed, enhancing the visual information for the driver.”); EX1019, 1-2 (“A major breakthrough in improving visibility, safety and comfort under all driving conditions is given by a headlamp with adjustable light intensity and beam pattern according to the vehicle speed, steering wheel angles and different driving conditions.”); EX1020, 368, 370, 374-378 (“The results show, that significant improvements can be proven by the adaptive headlamp system, without generating additional glare for oncoming traffic”).

249. And as explained in Section VIII.A., such control using map data, e.g., GPS data, was well known. EX1025, 186; EX1026, 461-462 (“To obtain more

accurate information on driving regions, it is advantageous to use data from a GPS navigation system."); EX1024, 815-816; EX1023, 514-515, 525; EX1027, Abstract; EX1023, 524 (Table 1 showing increased visibility along straight and curved roads with adaptive headlight systems); EX1025, 202, 205-206 ("[B]ecause of the available luminous flux in direction of driving, the driver has the ability to recognize the subsequent direction peripherally and can fixate other interesting objects in the road area."); EX1026, 451-452.

250. And as I have explained, for example above in Section VIII.A., such anti-glare or glare reduction features were well known. *See*, *e.g.*, EX1017, FIGS. 1-3, 5; EX1009, 6:4-7; 16:6-25, 20:15-33 ("According to an aspect of some embodiments of the present invention, the pattern recognition application identifies oncoming vehicles and automatically adjusts illumination provided by the luxels to prevent glare from light provided by the luxels from blinding a driver of the oncoming vehicle.").

251. My experience at Toyota Motor Corporation working on vehicle trajectory prediction using vehicle sensors, map databases and GPS to control headlights and to preemptively alert the driver about excessive speed when approaching curves, supports these positions.

252. Now that I have provided a detailed overview of why it would have been obvious to combine Gotou and Karlsson, I now address each of the claim elements and specific disclosures in the references that show such obviousness.

2. [1.P]: "A system, for a motor vehicle, comprising:"

[12.P]: "A non-transitory computer-readable storage medium, storing instructions that, when executed by one or more processors of a motor vehicle that includes a plurality of headlamps that each comprise a plurality of LED light sources, enable the one or more processors to:"

[23.P]: "A computer-implemented method for adapting light from headlamps of a motor vehicle to accommodate road shape changes, the headlamps including a plurality of LED light sources, comprising:"

253. Gotou's adaptive vehicle headlamp uses map data, including a road profile and a present position of the vehicle, to predict and adjust the illumination direction. EX1012, Abstract, 1:35-40, 2:8-26, 3:24-62, 4:45-49, 6:4-61, 7:32-43, 8:28-35, and FIGS. 1-3, 8-10. As shown in Figures 8 and 9, reproduced below, vehicle 1 includes headlights 2 with lighting regions 3 that are adjusted relative to an intended advancing direction of vehicle 1. EX1012, 3:24-62, 7:32-43, 8:28-35. For example, when there is a leftward curve, the light distribution of headlights 2 is adjusted leftward prior to reaching the curve. EX1012, 3:24-62, 7:32-43, 8:28-35.

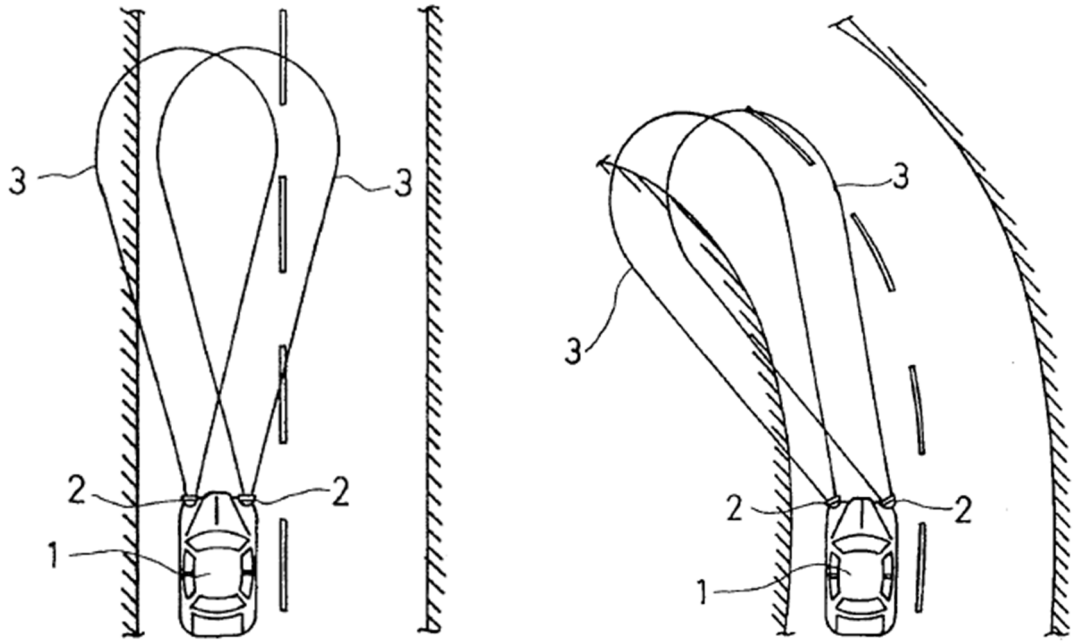

EX1012, FIGS. 8 and 9.

254. Karlsson too discloses a headlight having a plurality of spotlight beams and spotlight sensors to detect light from oncoming traffic and automatically control a lighting pattern of the headlight to reduce blinding oncoming traffic. EX1010, Abstract. Karlsson expands on this control of plural light sources, specifically describing benefits of an individually controllable grid of separate light sources (*LEDs*) for controlling the light direction. *See* EX1010, 14:1-15, 14:26-30, 2:30-35, 6:1-5. The spotlight beams (from LEDs) are controlled such that patterns of the emitted light beam are automatic and responsive to inputs. EX1010, 13:24-14:4. Switching one or more LEDs on or off or adjusting the intensity of the light emitted provides a desired pattern and intensity. EX1010, 13:24-14:4; *see also* EX1010, FIG. 3. Karlsson's spotlight beams 34 can be

provided by a light source 2 composed of a grid of separate LEDs, which can be controlled individually or in groups. EX1010, 13:24-14:4; *see also* EX1010, FIG. 3. The headlight includes a spatial distribution of LEDs (D, I, and D/I) and spotlight sensors S. EX1010, 19:18-20:3, FIGS. 6 and 14. The resulting emitted light beam 50 is represented as a window that can shift in the plane from left to right and from top to bottom and produced by LEDs based on the data from inputs, e.g., data sensed from spotlight sensors S. EX1010, 19:18-20:3, FIGS. 6 and 14.

255. In view of the above, and Section XI.A.3, below, the combined Gotou-Karlsson system discloses these elements.

3. [1.1]: "a plurality of headlamps, each comprising a plurality of LED light sources;"

***See* [12.P]: ("a plurality of headlamps that each comprising a plurality of LED light sources,")**

***See* [23.P]: ("the headlamps including a plurality of LED light sources,")**

256. Gotou focuses on an embodiment where the right and left headlights concurrently swing in the same direction to change the light distribution. *See* EX1012, 3:52-67, 4:1-29, 5:8-6:3, 6:18-7:4. However, Gotou also provides independent movement, as well as (1) using a plurality of light sources in each headlight and changing the light distribution by separately using one or more sources for illumination and (2) using one or more sub-reflectors to change the

light distribution. EX1012, 8:9-22. Gotou does not expressly identify using LED light sources for its headlights.

257. Using LEDs in headlamps was not novel—LED arrays were well known years before the ’029 patent’s earliest possible priority date. *See*, *e.g.*, EX1005, 4:9-15, 6:9-12, 8:4-17; EX1006, ¶¶5, 7, 8, 20, 27; EX1009, 19:27-29, 20:9-12, 23:8-12; EX1010, 4:25-35, 13:24-29, 11:29-32; EX1011, 1:18-2:3, 3:18-26, 8:13-20, 10:6-11, 10:21-22.

258. And advantages of using LEDs as emitters were also known, such as an array of LEDs meets the standard of luminous flux; there is no appreciable size difference in the overall headlamp packaging using such LEDs; the service life of LEDs is very long compared to conventional light sources. EX1011, 3:18-26. Beyond that, the art recognized that LEDs may be adapted under unfavorable weather (EX1011, 10:6-11) and function at a low-voltage direct current (EX1011, 10:21-22). *See also* EX1029, 987, 991 (“LED's are offering a unique set of benefits such as lower power consumption, Long operating life, compact size, increased reliability and very low maintenance requirements depending on the application;” “the probably biggest potential for LED's in Automotive is in Headlamps.”). Thus, the evolution from prior “conventional lamps” to LEDs as headlamp light sources would have been apparent to a POSA.

259. As I have explained throughout this declaration, e.g., above in Section VIII.A., arrays of independently controlled narrow-beam directional light sources, for example, light-emitting diode (LED) arrays, were developed with sufficient illuminance, directionality, and dynamic control as an alternative to traditional incandescent and gas discharge bulbs to provide adaptive light patterns and real-time feedback. EX1005, 1:5-3:44, 4:9-59; EX1010, 1:10-26, 9:18-26, 20:29-32; EX1015, 6-18, 21; EX1009, 16:6-25, 20:15-33.

260. Thus, implementing LEDs—with their many known benefits—as the light source of choice in Gotou's system would have been obvious to a POSA.

261. Indeed, it would have been obvious to substitute Karlsson's known controllable LED arrays to control the shape and/or intensity of headlights for Gotou's similar, known control of a non-LED light source, in the same way. *See also*, *e.g.*, EX1022, 2:22-26, 3:44-47; EX1029, 987, 991. And applying Karlsson's teachings of controllable LED light sources to Gotou's system with non-LED light sources would have merely been applying a known prior-art solution from a finite number of identified, predictable solutions, with a reasonable expectation of success.

262. In one of many examples, Karlsson discloses headlights that have a plurality of controllable spotlight beams (e.g., from LEDs), using spotlight sensors to detect light from oncoming traffic and automatically control the headlight

lighting pattern (in Karlsson's case, to reduce blinding oncoming traffic). EX1010, Abstract, 13:24-14:4; *see also* EX1010, 2:30-35, 9:18-26. Karlsson's system includes a grid of separate LEDs, which can be controlled individually or in groups. EX1010, Abstract, 13:24-14:4; *see also* EX1010, 2:30-35, 9:18-26. Figures 6 and 14 show a pattern and intensity (Figure 14) of a light beam 33 can be effected by switching one or more LEDs on or off, or by adjusting the intensity of the light emitted by an individual LED. EX1010, Abstract, 13:24-14:4; *see also* EX1010, 2:30-35, 9:18-26.

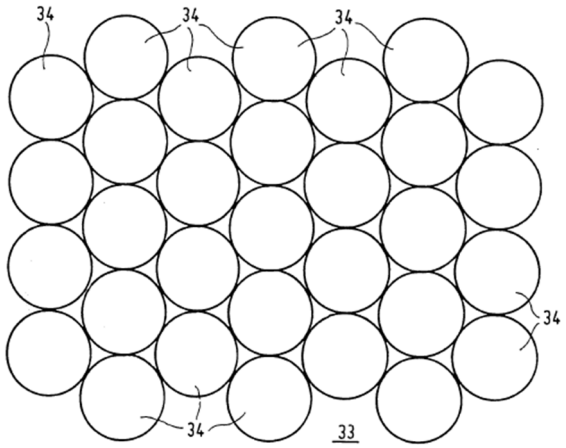

FIG. 6

EX1010, FIG. 6.

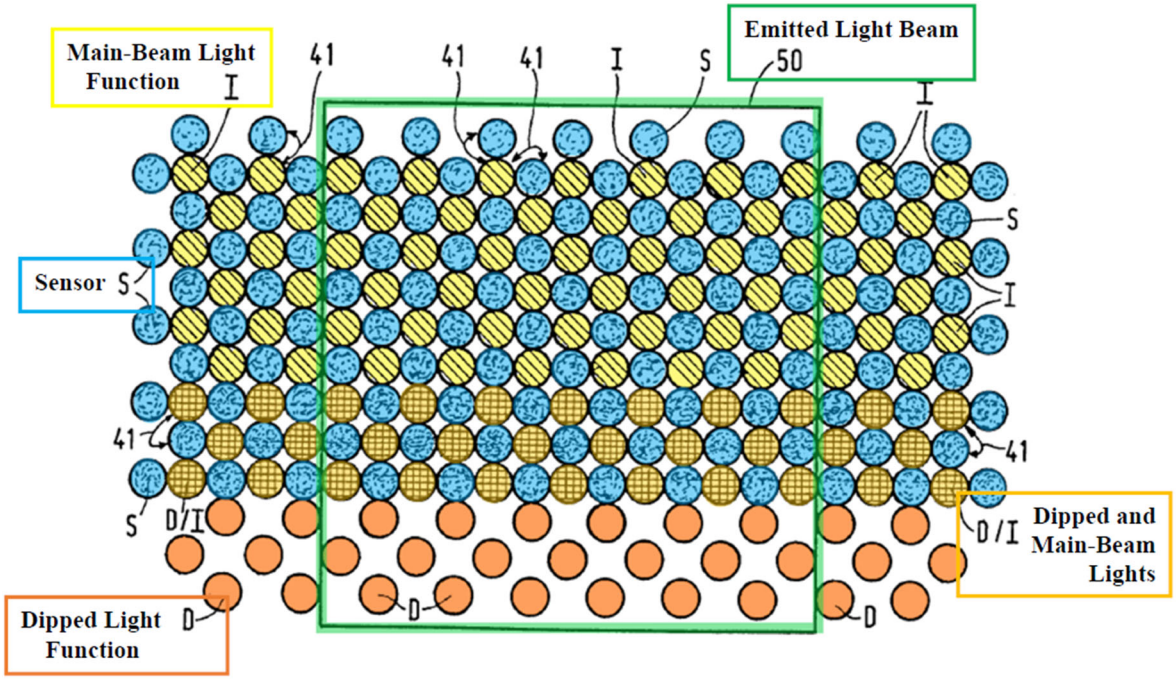

EX1010, FIG. 14 (annotated).

263. In view of the above, the combined Gotou-Karlsson system discloses these elements.

4. [1.2]: "one or more processors; and"

***See* [12.P]: ("one or more processors")**

***See* [23.P]: ("computer-implemented method")**

264. Gotou's Figure 3 shows a schematic block diagram for the control system, including ECU 10, which includes one or more processors.

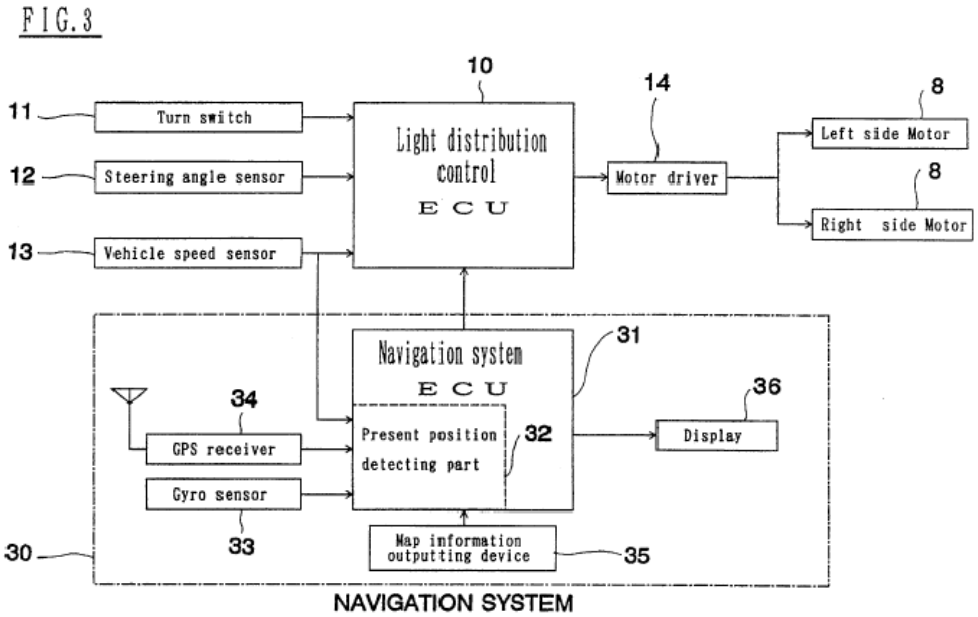

EX1012, FIG. 3.

265. Particularly, Gotou's ECU 10 "*processes* the information and signals to determine a requisite optical axis angle θ, and an indicating signal is outputted to motor driver 14 so as to achieve the optical axis angle θ." EX1012, 3:62-67; *see also* EX1012, 3:52-62, 4:1-29. As used in this field, I confirm that a POSA would understand that ECU 10 (and ECU 31, or any other ECU) would contain one or more *processors*, as common in the field. *See*, *e.g.*, EX1034, FIG. 2, 1:24-38 (describing ECUs controlling a headlamp turning-on operation in response to certain control inputs), 14:7-51 (describing ECU 12i shown in FIG. 2 including input/output interface 58i, CPU (processor) and three types of memory (RAM, ROM, and E^2PROM).

266. Should Patent Owner argue, incorrectly, that Gotou does not expressly disclose one or more processors, it would have been obvious to a POSA to include them. In the automotive lighting industry it was widely known that the terminology of ECU (electronic control unit) is commonly inclusive with one or more processors. *See*, *e.g.*, EX1034, FIG. 2, 1:24-38; 14:7-51.

267. Further, indeed, Karlsson's control system includes processors, memory, etc., and specifically discloses that "[t]he *control means* may likewise be built up of various components, such as a *microprocessor, a microcontroller, programmable logic circuits, or of discrete logic components*…A non-volatile *memory* 51 type PROM, EPROM or EEPROM may be used for *storing and recording the various adjustments*." EX1010, 21:36-22:4; *see also* EX1010, FIG. 15, 20:6-21. These were all well known components of a control system that a POSA would have known were included (or at a minimum obvious to include) in Gotou's ECU 10.

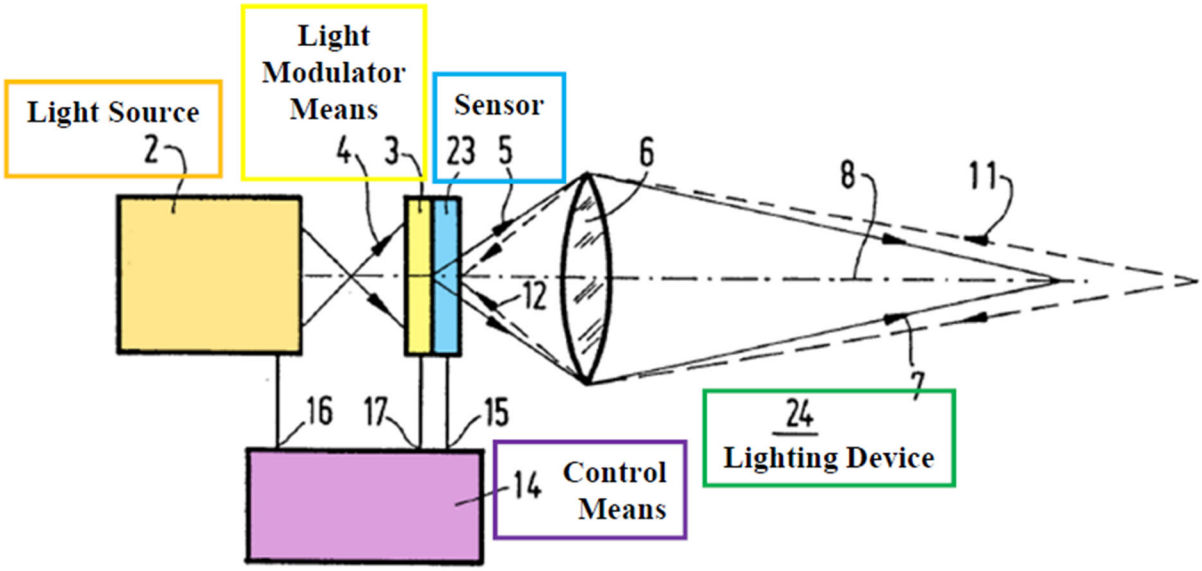

EX1010, FIG. 3 (annotated).

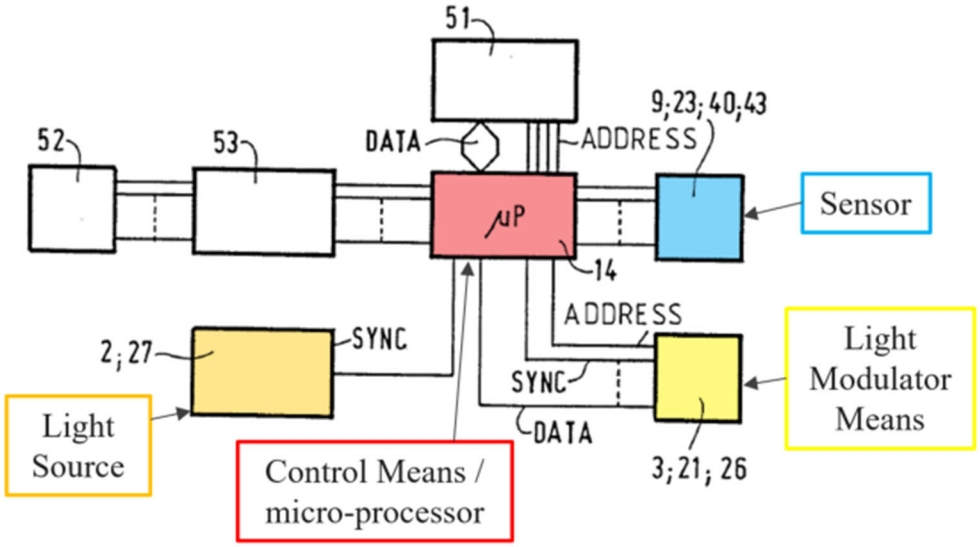

EX1010, FIG. 15 (annotated).

268. In view of the above, Gotou and Karlsson both disclose these elements.

5. [1.3]: "a memory storing instructions that, when executed by one or more of the one or more processors, enable the one or more processors to:"

***See* [12.P]: ("storing instructions that, when executed by one or more processors")**

***See* [23.P]: ("A computer-implemented method")**

269. As with the processor(s) discussed above, a skilled artisan would have also understood that Gotou's light distribution control ECU 10 includes a memory. Similarly, a skilled artisan would have understood that the ECU 31 also includes a memory. Gotou explains that "[v]arious kinds of road information on the map, for example, degrees of curves or the like on the road are *stored* in correspondence with each of the nodes." EX1012, 4:23-25; *see also* EX1012, 8:23-27, 4:36-40, FIG. 3. And as above, Gotou's ECU 10 "*processes*"—via instructions—"the information and signals to determine a requisite optical axis angle θ, and an indicating signal is outputted to motor driver 14 so as to achieve the optical axis angle θ." EX1012, 3:62-67; *see also* EX1012, 3:52-62.

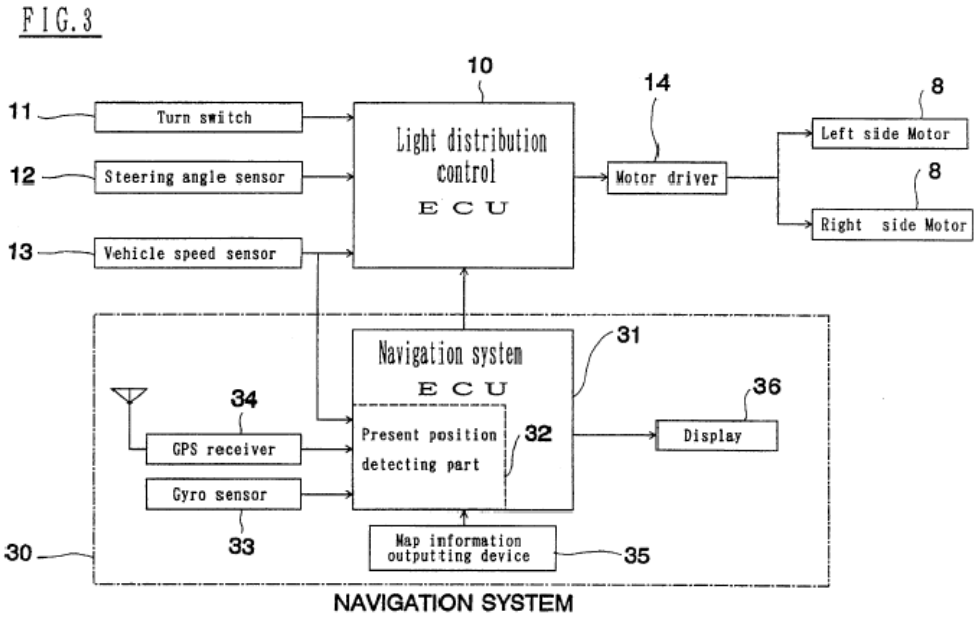

EX1012, FIG. 3.

270. Should Patent Owner argue, incorrectly, that Gotou does not expressly disclose memory storing instructions that are executed by one or more processors, this would have been obvious to a POSA in view of Karlsson.

271. Karlsson too describes a control system with a memory. EX1010, 21:36-22:4; *see also* EX1010, FIG. 15, 20:6-21. Karlsson's control system includes processors, memory, etc., and specifically discloses that "[t]he *control means* may likewise be built up of various components, such as a *microprocessor, a microcontroller, programmable logic circuits, or of discrete logic components*…A non-volatile *memory* 51 type PROM, EPROM or EEPROM may be used for *storing and recording the various adjustments*." EX1010, 21:36-22:4; *see also* EX1010, FIG. 15, 20:6-21. These were all well known components of a control

system that a POSA would have known were included (or at a minimum obvious to include) in Gotou's ECU 10. *See also*, *e.g.*, EX1034, FIG. 2, 1:24-38; 14:7-51.

272. In view of the above, Gotou and Karlsson both disclose these elements.

6. [1.4]: "receive first data, including at least map data, indicating a road curvature upcoming along a road on which the motor vehicle is traveling;"

[12.4]: "receive first data, including at least map data, indicating a road curvature upcoming along a road on which the motor vehicle is traveling;"

[23.4]: "determining an upcoming shape change of a road, ahead of the motor vehicle, based on first data, including map data, indicating the shape change;"

273. Gotou's ECU 10 receives map data and processes the information and signals to determine a requisite optical axis angle θ, and an indicating signal is outputted to motor driver 14 so as to achieve the optical axis angle θ. EX1012, 3:52-67, 4:1-29. Indeed, Gotou discloses that using map data "improves the visibility by varying the optical axis" (the shape of the light) "at an early stage before the steering wheel is actually turned," (i.e., before the road curvature). EX1012, 6:40-44. Thus, a POSA would have understood that the received map data indicated an upcoming road curvature.

FIG.3

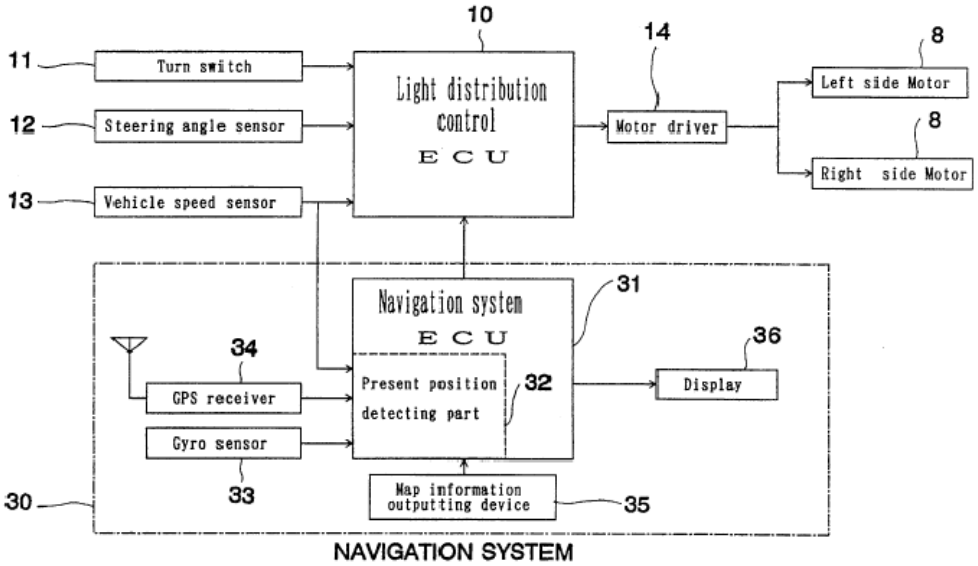

EX1012, FIG. 3.

See also EX1012, 5:8-6:3, 6:18-7:4, FIGS. 4 and 7.

FIG.4

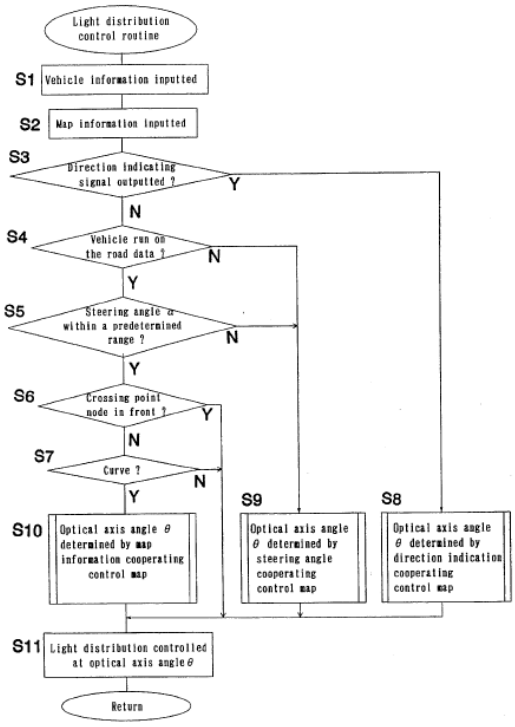

EX1012, FIG. 4.

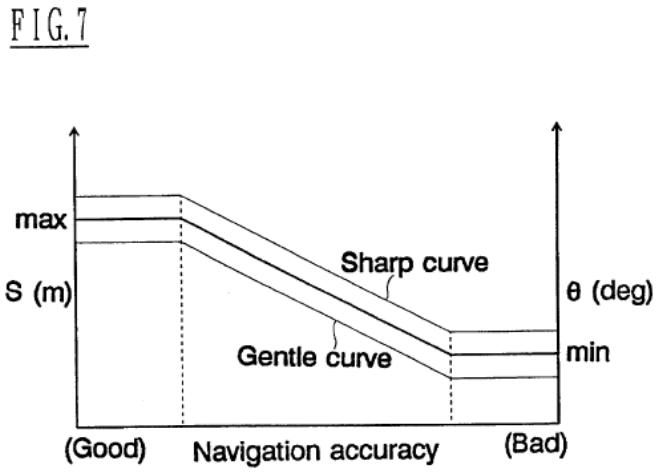

EX1012, FIG. 7.

274. Similarly, Karlsson discloses direction sensor 54, intended "for determining when the car 56 is taking a bend, so that the light beam 7 can be adapted to prevent the traffic on the other side of the road from being blinded as much as possible." EX1010, 20:22-32.

275. In view of the above, at least Gotou discloses these elements.

7. [1.5]: "determine a light change, the change adapting a light pattern of the headlamps in at least one of color, intensity or spatial distribution to increase light in a direction of the road curvature ahead of the motor vehicle and shaping light based at least in part on the road curvature; and"

[12.5]: "determine a light change, the change adapting a light pattern of the headlamps in at least one of color, intensity or spatial distribution to increase light in a direction of the road curvature ahead of the motor vehicle and shaping light based at least in part on the road curvature; and"

[23.5]: "determining a light output, the output adapting a light pattern of the headlamps in at least one of color, intensity or spatial distribution to increase light in a direction associated with the shape change ahead of the motor vehicle and shaping light based on the shape change; and"

276. Gotou's ECU 10 processes the information and signals to determine a requisite optical axis angle θ (*determining* a light change), and an indicating signal is outputted to motor driver 14 so as to achieve the optical axis angle θ, thereby *adapting and shaping* the light pattern in intensity and spatial distribution in a direction of the road curvature. EX1012, 3:62-67.

277. Gotou's Figure 4 shows a control method for distributing light.

FIG.4

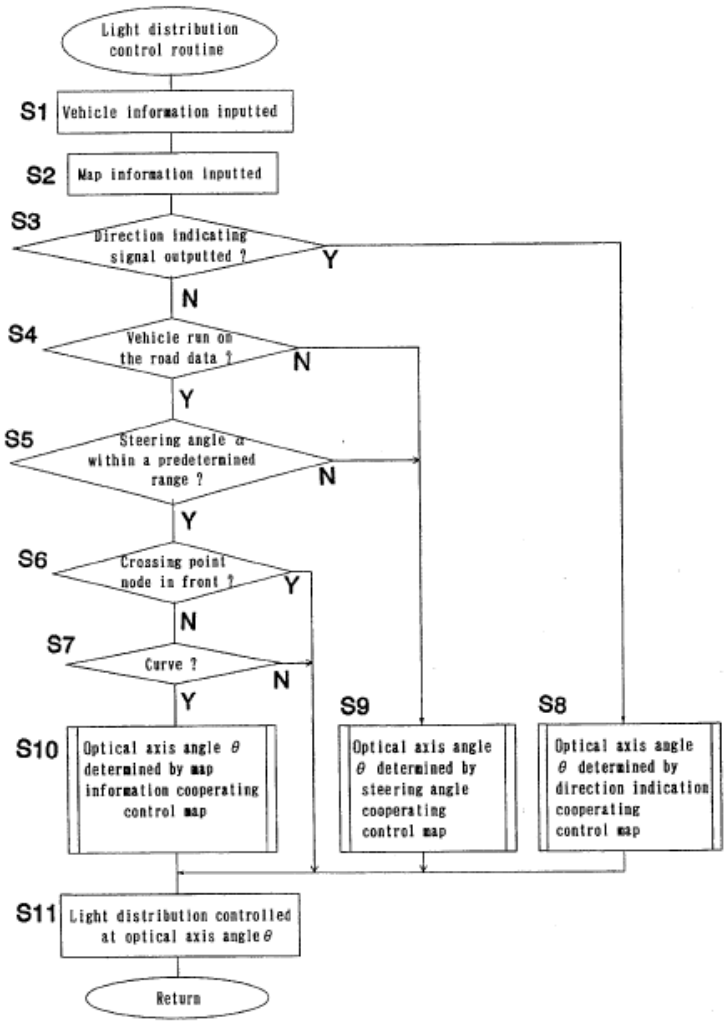

EX1012, FIG. 4.

As shown, at S2, map information is input (such as information stored as crossing points, directions of curves or degrees of sharpness of curves). EX1012, 4:36-40. At S7, the system determines whether or not a curve is present. EX1012, 6:18:-27, 5:8-6:3, 6:28-7:4.

278. Gotou's Figures 8 and 9 show the effect of this determination—light is shaped in the direction of the curve.

FIG.8

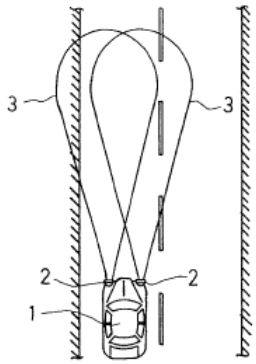

EX1012, FIG. 8.

FIG.9

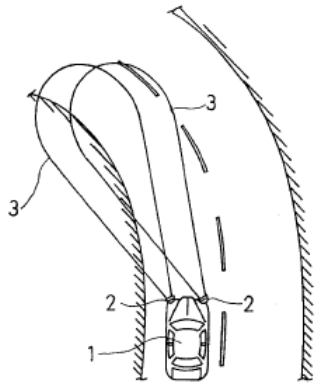

EX1012, FIG. 9.

279. Karlsson too, describes discrete control of the light pattern (shaping light). For example, "the objective of the invention is to provide…a headlight of a motor vehicle, wherein the pattern of the emitted light beam is *varied automatically* in an efficient manner and with maximum sensitivity *in response to at least one control signal*." EX1010, 2:30-35; *see also* EX1010, 20:22-32. Indeed, Karlsson's grid of separate LEDs are controlled individually or in groups, and Figures 6 and 14 show a pattern and intensity (Figure 14) of a light beam 33 can be effected by switching one or more LEDs on or off, or by adjusting the intensity of the light emitted by an individual LED. EX1010, 2:30-35; *see also* EX1010, 20:22-32.

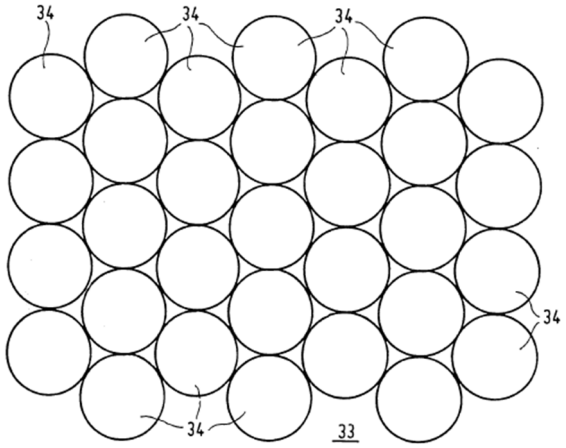

FIG. 6

EX1010, FIG. 6.

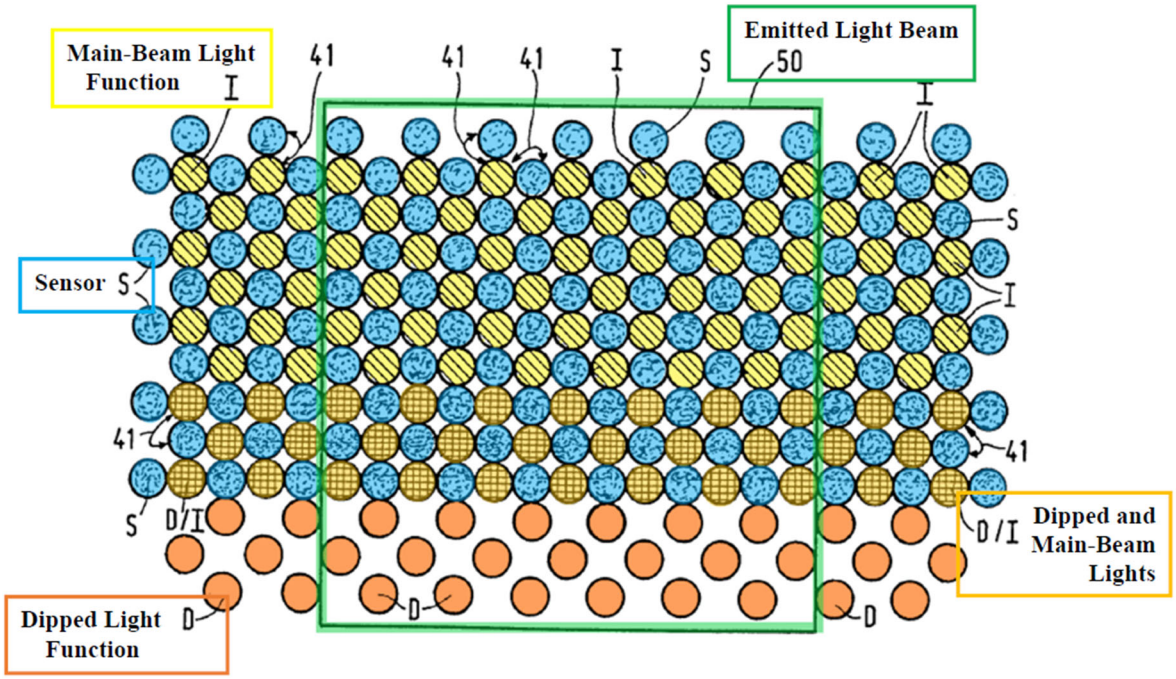

EX1010, FIG. 14 (annotated).

280. And as I explained, for example, in Section VIII.A., such adaptive light control was well known. *See*, *e.g.*, EX1015, 3-6; EX1016, 1-19; EX1023, 514-515; EX1024, 819. EX1018, 33-36 ("A new light concept called Adaptive

Light Control (ALC) is developed with the aim to improve night time traffic safety."); EX1019, 1-2 ("A major breakthrough in improving visibility, safety and comfort under all driving conditions is given by a headlamp with adjustable light intensity and beam pattern according to the vehicle speed, steering wheel angles and different driving conditions."); EX1020, 368, 370, 374-378 ("The car's sensors analyze and evaluate the driving situation and generate a light distribution that is adapted to that particular situation. In this process, not only the driver's comfort is increased but the visibility is improved also. This has a direct positive impact on traffic safety."); EX1024, 819 ("The challenge of such a system approach and the necessary and not so easy change towards performance and system requirements was clearly seen - but also the prospects of possible safety improvement."); EX1025, 202 ("One explanation could be that because of the available luminous flux in direction of driving, the driver has the ability to recognize the subsequent direction peripherally and can fixate other interesting objects in the road area. With other words the driver has more time for driving and the tiredness of the eyes could be reduced."); EX1028, 844 ("The driver's comfort and safety can be improved considerably by adaptive motor vehicle headlighting, with the today's technical means in lighting design and manufacturing, as well as sensors and communication systems in cars."). And it was well known that adaptive lighting used multiple directional light sources (e.g., multiple directional beams, such as light modules or

beam contributors) to produce an adaptive light pattern by varying illumination characteristics including beam intensity, beam shape, beam color, beam direction around curved roads, and glare reduction. EX1017, 3-10 ("[A] curve or an intersection can be adaptively illuminated before reaching actually the point when the steering wheel is turned or the turn indicator is operated."); EX1018, 33-36 ("The advantage of using Adaptive Light Control is shown in Fig. 5, where one observes a country road lit correctly. Instead of illuminating some fields or trees, the available light is directed dynamically in the direction where it is actually needed, enhancing the visual information for the driver."); EX1019, 1-2 ("A major breakthrough in improving visibility, safety and comfort under all driving conditions is given by a headlamp with adjustable light intensity and beam pattern according to the vehicle speed, steering wheel angles and different driving conditions."); EX1020, 368, 370, 374-378 ("The results show, that significant improvements can be proven by the adaptive headlamp system, without generating additional glare for oncoming traffic").

281. In view of the above, Gotou and Karlsson both disclose these elements.

8. [1.6]: "control at least a first plurality of the LED light sources to provide light based at least in part on the determined light change and prior to the motor vehicle reaching the road curvature."

[12.6]: "control at least a first plurality of the LED light sources to provide light based at least in part on the determined light change and prior to the motor vehicle reaching the road curvature."

[23.6]: "prior to reaching the road shape change, causing at least a first plurality of the LED light sources to provide light based at least in part on the determined light output."

282. Although Gotou does not disclose using LED light sources, Gotou discloses the control of headlights "to provide light based at least in part on the determined light change and prior to the motor vehicle reaching the road curvature," as claimed. Gotou also discloses that using map data "improves the visibility by varying the optical axis" (the shape of the light) "at an early stage before the steering wheel is actually turned," (i.e., before the road curvature). EX1012, 6:40-44.

283. Karlsson's lighting device 1 provides a light beam 7 from LEDs, with the intensity and pattern controlled by lighting means 2, 3 and control means 14. EX1010, 9:18-26. Lighting means 2, 3 operates with an intensity and a pattern that are optimally adapted to the road. EX1010, 9:18-26. As in Section XI.A.7, Karlsson's grid of separate LEDs are controlled individually or in groups, and Figures 6 and 14 show a pattern and intensity (Figure 14) of a light beam 33 can be

effected by switching one or more LEDs on or off, or by adjusting the intensity of the light emitted by an individual LED. EX1010, 9:18-26.

284. So, a POSA would have been motivated to combine Gotou and Karlsson to take advantage of Karlsson's individually controllable grid of separate light sources (LEDs) for better controllability of the light direction in Gotou and to realize the benefits of LED light sources. *See also* Sections XI.A.1, XI.A.2; EX1012, 7:32-43, 1:10-40; EX1010, 14:1-15, 14:26-30; 2:30-35, 6:1-5.

285. In view of the above, the combined Gotou and Karlsson system disclose these elements.

286. Thus, the combined Gotou-Karlsson system renders obvious these features, and thus each of the independent claims 1, 12, and 23.

287. I turn now to the dependent claims.

B. Dependent claims

1. [2]: "wherein the determination of the light change includes selection of the first plurality of the LED light sources."

[13]: "wherein the determination of the light change includes selection of the first plurality of the LED light sources."

[24]: "wherein the determining the light includes selecting the first plurality of the LED light sources."

288. Even though Gotou does not disclose the use of LED light sources, the Gotou-Karlsson combined system renders obvious this feature. As in Section XI.A.7, Karlsson's grid of separate LEDs are controlled individually or in groups,

and Figures 6 and 14 show a pattern and intensity (*see* FIG. 14) of a light beam 33 can be effected by switching one or more LEDs on or off, or by adjusting the intensity of the light emitted by an individual LED. EX1010, 14:1-15, 14:26-30, 2:30-35, 6:1-5. The combined system thus selects which LEDs should be on and which should be off or reduced. EX1012, 5:33-54. Thus, when the combined system determines a light change should be made, it selects a first plurality of LEDs to provide light.

289. A POSA would have been motivated to combine the teachings of Gotou and Karlsson to take advantage of benefits of Karlsson's individual controllable grid of LEDs for better reliability and longevity, controllability of the light direction, adaptability in unfavorable weather, and low-voltage direct current operation, in Gotou's system in an efficient manner and with automatic sensitivity. *See above*, Sections XI.A.1, XI.A.2; EX1010, 14:1-15, 14:26-30, 2:30-35, 6:1-5.

290. In view of the above, as combined, claims 2, 13, and 24 are rendered obvious by the Gotou-Karlsson combination.

2. [3]: "wherein the instructions include instructions that, when executed by the one or more processors, enable the one or more processors to reshape light based on the road curvature as the motor vehicle travels at least to or through the road curvature."

[14]: "wherein the instructions include instructions that, when executed by the one or more processors, enable the one or more processors to reshape light based on the road curvature as the motor vehicle travels at least to or through the road curvature."

[25]: "reshaping light based on the shape change as the motor vehicle travels at least to or through the shape change."

291. Again, these elements simply implement "*reshaping*" the light based on road curvature via the customary step of the instructions stored in the memory and executed by the processor. *See*, *e.g.*, *above* Section X.A.5.

292. Gotou's ECU 10 receives map data, processing the information and signals to determine a requisite optical axis angle θ, and thus controlling the optical axis angle θ. EX1012, 3:62-67, 3:52-62, 4:1-29. Gotou's control method for light distributing control includes "Return" and is an iterative process that accounts for *reshaping*.

FIG. 4

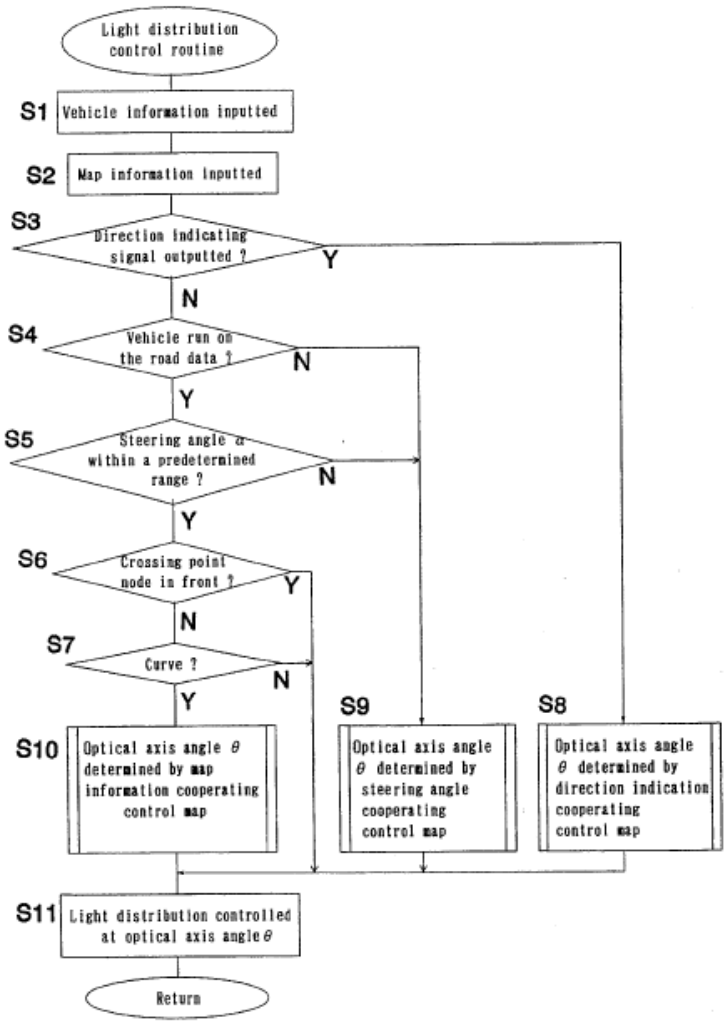

EX1012, FIG. 4.

See EX1012, 5:8-6:3, 6:18-7:4.

293. Indeed, Figure 7 shows how light distribution may be changed to accommodate a variety of *curvatures* and *reshaping*, with accommodations for navigation accuracy, gentle and sharp curves, etc.

FIG.7

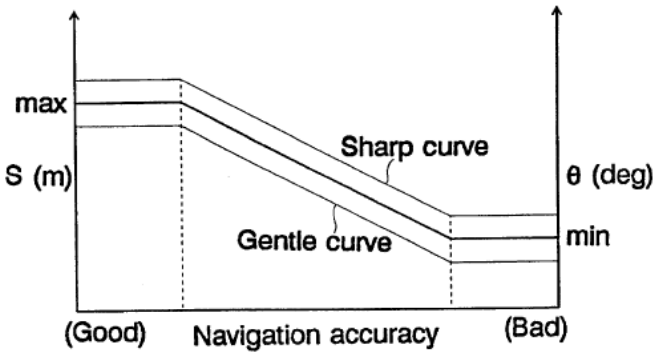

EX1012, FIG. 7.

See also 6:28-61.

294. In view of the above, as combined, claims 3, 14, and 25 are rendered obvious by the Gotou-Karlsson combination.

3. [4]: "wherein the reshaping of light further includes control to at least one of the first plurality of LED light sources, or a second plurality of LED light sources, including at least one LED light source different from the LED light sources of the first plurality of LED light sources, to provide reshaped light."

[15]: "wherein the reshaping of light further includes control to at least one of the first plurality of LED light sources, or a second plurality of LED light sources, including at least one LED light source different from the LED light sources of the first plurality of LED light sources, to provide reshaped light."

[26]: "wherein the reshaping light further includes controlling at least one of the first plurality of LED light sources, or a second plurality of LED light sources, including at least one LED light source different from the LED light sources of the first plurality of LED light sources, to provide reshaped light."

295. Again, I note that these elements further contemplate selecting one of the first plurality of LED's or some second plurality of LEDs with one different LED from the first to provide *reshaped* light. A POSA would have understood this to have been obvious, at least because *reshaping* the combined system's light in any sense would have required taking some action with *at least one* of Gotou's modified headlamps utilizing Karlsson's LEDs (e.g., rather than relying on the instant forward direction of travel of the vehicle). Indeed, as above, Gotou's ECU 10 receives map data, processing the information and signals to determine a requisite optical axis angle θ, and thus controlling the optical axis angle θ. EX1012, 3:62-67, 3:52-62, 4:1-29. Gotou's control method for light distributing

control includes “Return” and is an iterative process that accounts for reshaping. EX1012, FIG. 7; *see also* EX1012, 6:28-61.

296. And the combined system using Karlsson’s headlights including a spatial distribution of LEDs (D, I, and D/I) and spotlight sensors S (EX1010, 19:18-20:3) provides an emitted light beam 50 (represented as a window) that can shift in the plane from left to right and from top to bottom and produced by LEDs based on the data from inputs. This illustrates that a specific LED is used in one situation (e.g., prior to entering a curve) but not in another situation (e.g., while driving through a curve).

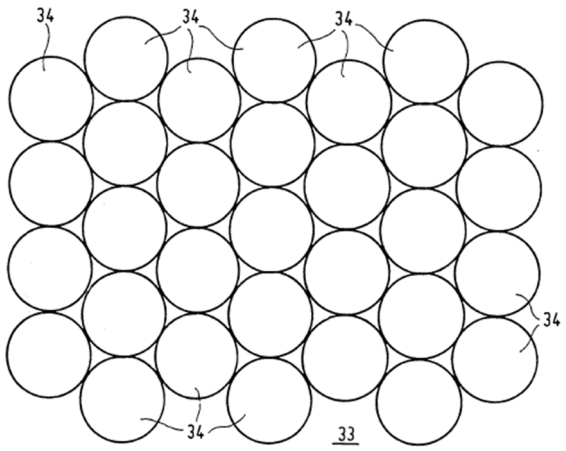

FIG. 6

EX1010, FIG. 6.

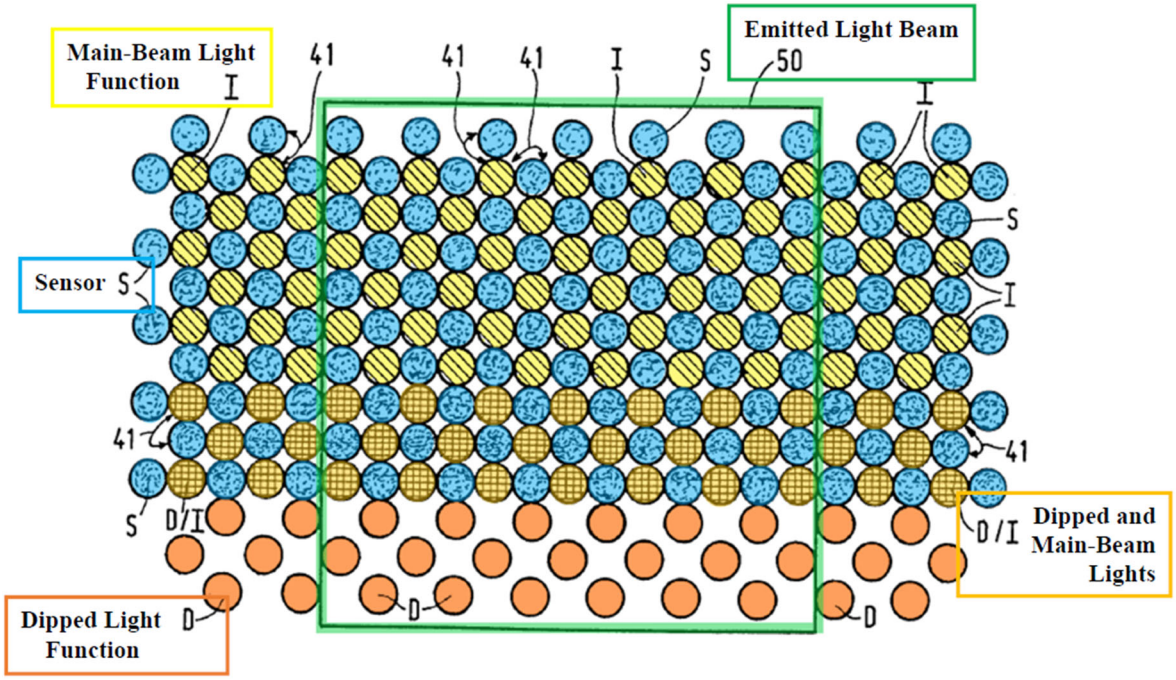

EX1010, FIG. 14 (annotated).

297. Thus, Gotou–Karlsson's combined system renders obvious this feature. A POSA would have been motivated to combine the teachings of Gotou and Karlsson to take advantage of benefits of Karlsson's individual controllable grid of LEDs for better reliability and longevity, controllability of the light direction, adaptability in unfavorable weather, and low-voltage direct current operation, in Gotou's system in an efficient manner and with automatic sensitivity. *See above*, Sections XI.B.1, XI.B.2; EX1010, 14:1-15, 14:26-30; 2:30-35, 6:1-5.

298. In view of the above, as combined, claims 4, 15, and 26 are rendered obvious by the Gotou-Karlsson combination.

4. [5]: "wherein the increase of light in the direction of the road curvature includes at least an increase of light emitted at a level below high-beam light and directed in the direction of the road curvature."

[16]: "wherein the increase of light in the direction of the road curvature includes at least an increase of light emitted at a level below high-beam light and directed in the direction of the road curvature."

[27]: "wherein the increase of light in the direction associated with the shape change includes at least light output that increases light emitted at a level below high-beam light and directed in the direction associated with shape change."

299. This feature recites, at bottom, increasing any light (other than high-beam intensity) in the direction of the road curvature.

300. Gotou's variation of high-beam and low-beam is generally in a vertical direction and not affected by horizontal movement—rather, when the vehicle runs along a curved corner or turns right or left, if the lamp optical axes are moved in a turning direction to deflect the lighting region at the curve, thereby improving visiblity. EX1012, 1:10-20; *see also* EX1012, 3:52-67, 4:1-29, FIG. 4, 4:36-40, 5:8-7:4, FIGS. 8-9.

301. Karlsson too descloes "the the increase of light in the direction of the road curvature" as claimed, at least with the description that "[t]he direction sensor 54 is in particular intended for determining when the car 56 is taking a bend, so that the light beam 7 can be adapted to prevent the traffic on the other side of the road from being blinded as much as possible." EX1010, 20:29-33.

302. Thus, the increase of lighting toward the curve of the combined Gotou-Karlsson system is emitted at a level below high-beam light, unless manually changed by the driver, resulting in the increase of light in the direction of the road curvature being "an increase of light emitted at a level below high-beam light." *See* EX1012, 1:10-20. The increased lighting toward the curve of the combined Gotou-Karlsson system (using Karlsson's LEDs) would be at a level below high-beam light (i.e., Karlsson's LEDs would implement the same type of light level toward the curve).

303. In view of the above, claims 5, 16, and 27 are rendered obvious by both Gotou and Karlsson.

5. **[6.1]: "wherein the instructions include instructions that, when executed by the one or more processors, enable the one or more processors to:"**

[17.1]: "wherein the instructions include instructions that, when executed by the one or more processors, enable the one or more processors to:"

[28.1]: (no corresponding element due to claim 23 not positively reciting "processors")

[6.2]: "determine a second light change, the second change adapting the light pattern of the headlamps in at least one of color, intensity or spatial distribution to increase light in a direction of a second road curvature ahead of the motor vehicle, determined based on at least one of the first data or second data including at least second map data, and the second change shaping light based at least in part on the second road curvature; and"

[17.2]: "determine a second light change, the second change adapting the light pattern of the headlamps in at least one of color, intensity or spatial distribution to increase light in a direction of a second road curvature ahead of the motor vehicle, determined based on at least one of the first data or second data including at least second map data, and the second change shaping light based at least in part on the second road curvature; and"

[28.2]: "determining a second light output, the second output adapting the light pattern of the headlamps in at least one of color, intensity or spatial distribution to increase light in a direction associated with a second shape change ahead of the motor vehicle, determined based on at least one of the first data or second data including at least second map data, and the second output shaping light based at least in part on the second shape change; and"

[6.3]: "control at least a second plurality of the LED light sources, having at least one LED light source different from the first plurality of LED light sources, to provide light based at least in part on the determined second light change and prior to the motor vehicle reaching the second road curvature."

[17.3]: "control at least a second plurality of the LED light sources, having at least one LED light source different from the first plurality of LED light sources, to provide light based at least in part on the determined second light change and prior to the motor vehicle reaching the second road curvature."

[28.3]: "controlling at least a second plurality of the LED light sources, having at least one LED light source different from the first plurality of LED light sources, to provide light based at least in part on the determined second output and prior to the motor vehicle reaching the second shape change."

304. As above, the Gotou-Karlsson combined system is iterative, and determines any number of future light changes. The elements are a verbose way of reciting that the system (including instructions [6.1]/[17.1]/[28.1]) (1) determines a second light change for a second (i.e., next) road curvature [6.2]/[17.2]/[28.2], and (2) controls the LEDs to provide light toward the second road curvature (i.e., "shaping light") based on map data [6.3]/[17.3]/[28.3].

305. Thus, as above, the Gotou-Karlsson combination discloses this function for the same reasons as in, Sections XI.A.1, XI.A.7, XI.A.8, XI.B.2, XI.B.3. *See*, *e.g.*, EX1008, 13:67-14:13, 14:26-30, 2:30-35, 6:1-5; EX1012, Abstract, 1:35-40, 2:8-26, 3:24-62, 4:45-49, 6:4-61, 7:32-43, 8:28-35, FIGS. 1-3

and 8-10. This is nothing more than a subsequent, repeated step in the continuous, iterative processes of the ’029 patent and Gotou-Karlsson systems.

306. Gotou’s ECU 10 processes the information and signals to determine a requisite optical axis angle θ (*determining* a light change), and an indicating signal is outputted to motor driver 14 so as to achieve the optical axis angle θ, thereby *adapting and shaping* the light pattern in intensity and spatial distribution in a direction of the road curvature. EX1012, 3:62-67.

Gotou’s Figure 4 shows a control method for distributing light.

FIG. 4

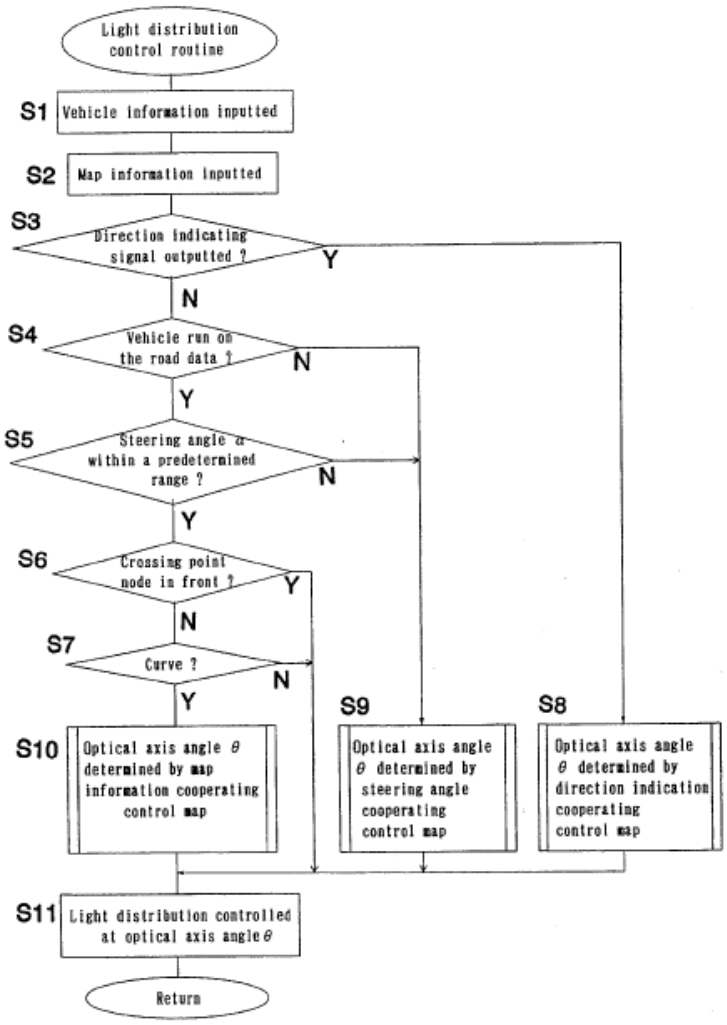

EX1012, FIG. 4.

307. As shown, at S2, map information is input (such as information stored as crossing points, directions of curves or degrees of sharpness of curves). EX1012, 4:36-40. At S7, the system determines whether or not a curve is present. EX1012, 6:18:-27, 5:8-6:3, 6:28-7:4.

308. Gotou's Figures 8 and 9 show the effect of this determination—light is shaped in the direction of the curve.

FIG.8

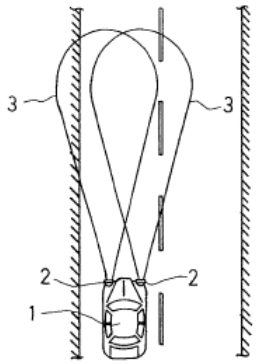

EX1012, FIG. 8.

FIG.9

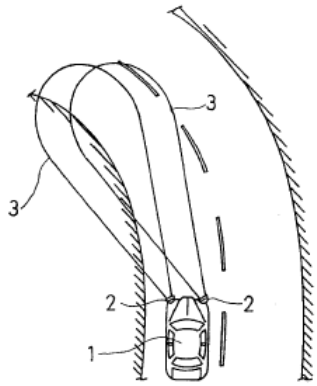

EX1012, FIG. 9.

309. Karlsson too, describes discrete control of the light pattern (shaping light). For example, "the objective of the invention is to provide…a headlight of a motor vehicle, wherein the pattern of the emitted light beam is *varied automatically* in an efficient manner and with maximum sensitivity *in response to at least one control signal*." EX1010, 2:30-35; *see also* EX1010, 20:22-32. Indeed, Karlsson's grid of separate LEDs are controlled individually or in groups, and Figures 6 and 14 show a pattern and intensity (Figure 14) of a light beam 33 can be effected by switching one or more LEDs on or off, or by adjusting the intensity of the light emitted by an individual LED. EX1010, 2:30-35; *see also* EX1010, 20:22-32.

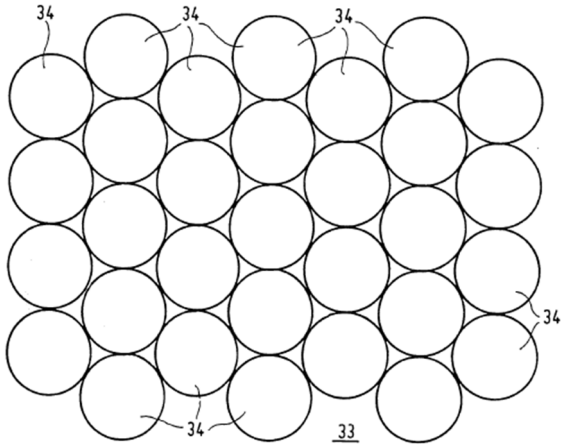

FIG. 6

EX1010, FIG. 6.

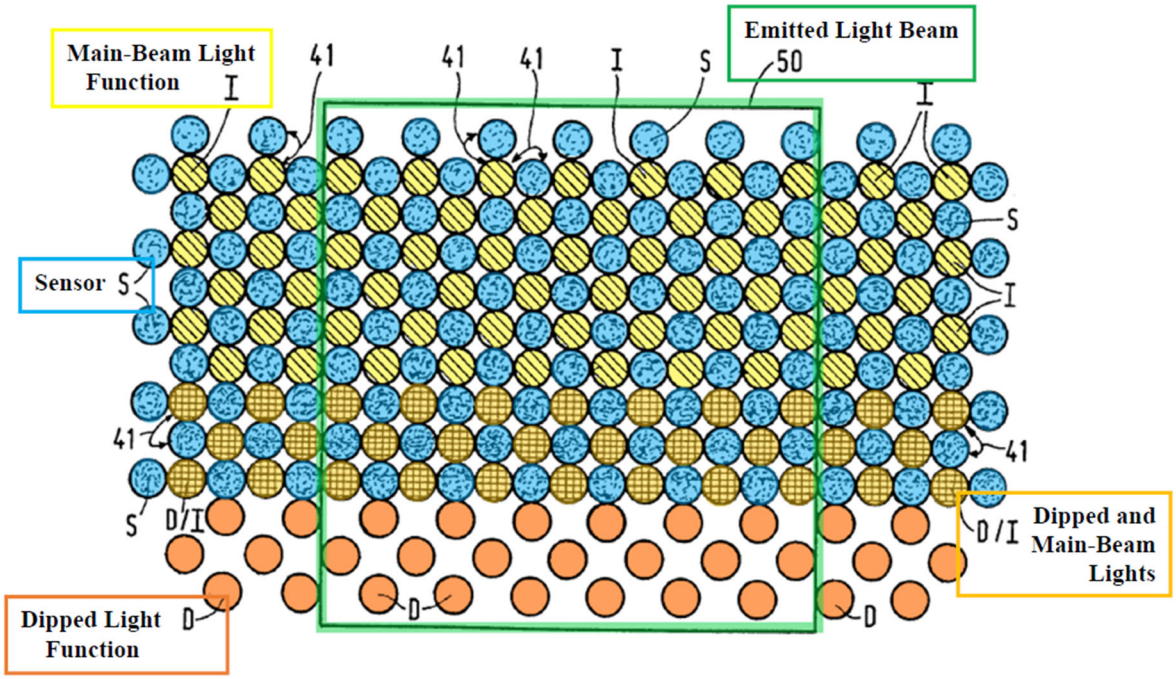

EX1010, FIG. 14 (annotated).

310. Gotou discloses that using map data "improves the visibility by varying the optical axis" (the shape of the light) "at an early stage before the

steering wheel is actually turned," (i.e., before the road curvature). EX1012, 6:40-44.

311. Karlsson's lighting device 1 provides a light beam 7 from LEDs, with the intensity and pattern controlled by lighting means 2, 3 and control means 14. EX1010, 9:18-26. Lighting means 2, 3 operates with an intensity and a pattern that are optimally adapted to the road. EX1010, 9:18-26. As in Section XI.A.7, Karlsson's grid of separate LEDs are controlled individually or in groups, and Figures 6 and 14 show a pattern and intensity (Figure 14) of a light beam 33 can be effected by switching one or more LEDs on or off, or by adjusting the intensity of the light emitted by an individual LED. EX1010, 9:18-26.

312. So, a POSA would have been motivated to combine Gotou and Karlsson to take advantage of Karlsson's individually controllable grid of separate light sources (LEDs) for better controllability of the light direction in Gotou and to realize the benefits of LED light sources. *See also* Sections XI.A.1, XI.A.2; EX1012, 7:32-43, 1:10-40; EX1010, 14:1-15, 14:26-30; 2:30-35, 6:1-5.

313. And as I explained, for example, in Section VIII.A., such adaptive light control was well known. *See*, *e.g.*, EX1015, 3-6; EX1016, 1-19; EX1023, 514-515; EX1024, 819. EX1018, 33-36 ("A new light concept called Adaptive Light Control (ALC) is developed with the aim to improve night time traffic safety."); EX1019, 1-2 ("A major breakthrough in improving visibility, safety and

comfort under all driving conditions is given by a headlamp with adjustable light intensity and beam pattern according to the vehicle speed, steering wheel angles and different driving conditions."); EX1020, 368, 370, 374-378 ("The car's sensors analyze and evaluate the driving situation and generate a light distribution that is adapted to that particular situation. In this process, not only the driver's comfort is increased but the visibility is improved also. This has a direct positive impact on traffic safety."); EX1024, 819 ("The challenge of such a system approach and the necessary and not so easy change towards performance and system requirements was clearly seen - but also the prospects of possible safety improvement."); EX1025, 202 ("One explanation could be that because of the available luminous flux in direction of driving, the driver has the ability to recognize the subsequent direction peripherally and can fixate other interesting objects in the road area. With other words the driver has more time for driving and the tiredness of the eyes could be reduced."); EX1028, 844 ("The driver's comfort and safety can be improved considerably by adaptive motor vehicle headlighting, with the today's technical means in lighting design and manufacturing, as well as sensors and communication systems in cars."). And it was well known that adaptive lighting used multiple directional light sources (e.g., multiple directional beams, such as light modules or beam contributors) to produce an adaptive light pattern by varying illumination characteristics including beam intensity, beam shape, beam color, beam direction

around curved roads, and glare reduction. EX1017, 3-10 ("[A] curve or an intersection can be adaptively illuminated before reaching actually the point when the steering wheel is turned or the turn indicator is operated."); EX1018, 33-36 ("The advantage of using Adaptive Light Control is shown in Fig. 5, where one observes a country road lit correctly. Instead of illuminating some fields or trees, the available light is directed dynamically in the direction where it is actually needed, enhancing the visual information for the driver."); EX1019, 1-2 ("A major breakthrough in improving visibility, safety and comfort under all driving conditions is given by a headlamp with adjustable light intensity and beam pattern according to the vehicle speed, steering wheel angles and different driving conditions."); EX1020, 368, 370, 374-378 ("The results show, that significant improvements can be proven by the adaptive headlamp system, without generating additional glare for oncoming traffic").

314. And as I have explained throughout this declaration, e.g., above in Section VIII.A., arrays of independently controlled narrow-beam directional light sources, for example, light-emitting diode (LED) arrays, were developed with sufficient illuminance, directionality, and dynamic control as an alternative to traditional incandescent and gas discharge bulbs to provide adaptive light patterns and real-time feedback. EX1005, 1:5-3:44, 4:9-59; EX1010, 1:10-26, 9:18-26, 20:29-32; EX1015, 6-18, 21; EX1009, 16:6-25, 20:15-33.

315. In view of the above, as combined, claims 6, 17, and 28 are rendered obvious by the Gotou-Karlsson combination.

6. **[7.1]: "wherein the increase of light in the direction of the road curvature includes at least one of expansion of the light pattern in the direction of the road curvature or an increase to intensity of light directed in the direction of the road curvature; and"**

[18.1]: "wherein the increase of light in the direction of the road curvature includes at least one of expansion of the light pattern in the direction of the road curvature or an increase to intensity of light directed in the direction of the road curvature; and"

[29.1]: "wherein the increase of light in the direction associated with the shape change includes at least one of expansion of the light pattern in the direction associated with the shape change or an increase to intensity of light directed in the direction associated with the shape change; and"

[7.2] "wherein the determination of the light change includes determination of light changes to individual LEDs of the first plurality of LED light sources, at least one of the changes including at least one of:"

[18.2]: "wherein the determination of the light change includes determination of light changes to individual LEDs of the first plurality of LED light sources, at least one of the changes including at least one of:"

[29.2]: "wherein the determining the light output includes determining output for individual LEDs of the first plurality of LED light sources, the output including providing light directed in the direction associated with the shape change from an LED not providing light directed in the direction associated with the shape change prior to the change."

[7.3]: "a variation to at least one of intensity or color of individual LEDs of the first plurality of LED light sources, or"

[18.3]: "a variation to at least one of intensity or color of individual LEDs of the first plurality of LED light sources, or"

***See* [29.2] (no corresponding element in claim 29, no mentioning intensity or color of individual LEDs)**

[7.4]: "providing light directed in the direction of the road curvature from an LED not providing light directed in the direction of the road curvature prior to the change."

[18.4]: "providing light directed in the direction of the road curvature from an LED not providing light directed in the direction of the road curvature prior to the change."

***See* [29.2] ("providing light directed in the direction associated with the shape change from an LED not providing light directed in the direction associated with the shape change prior to the change.")**

316. Again, these elements are simply a way of reciting well known alternatives for increasing the light toward the road curvature [7.1]/[18.1]/[29.1], [7.2]/[18.2]/[29.2]. The light can be increased by (1) increasing the intensity of the lights [7.3]/[18.3], or (2) increasing the number of lights that are "on" that are directed toward the road curvature [7.4]/[18.4]/[29.2]. These basic alternatives are disclosed by the Gotou-Karlsson combination.

317. As with Ground 1, the obviousness of this feature is shown by the same disclosures and rationales as the independent claims. *See above*, Section XI.A. Indeed, Karlsson's grid of separate LEDs are controlled individually or in groups [7.2]/[18.2]/[29.2], [7.3]/[18.3], and Figures 6 and 14 show a pattern and intensity (Figure 14) of a light beam 33 can be effected by switching one or more

LEDs on or off [7.4]/[18.4]/[29.2], or by adjusting the intensity of the light emitted by an individual LED [7.3]/[18.3]. *See above*, Section XI.A.

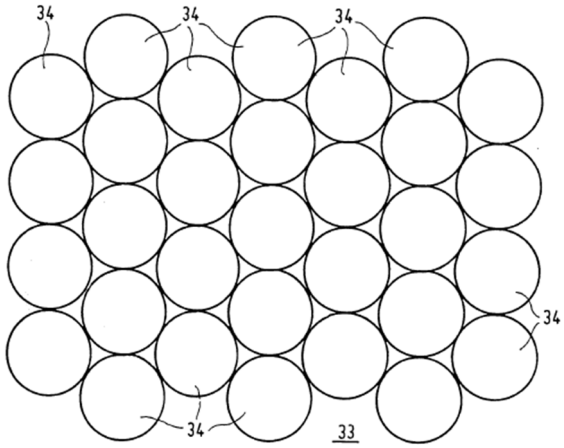

FIG. 6

EX1010, FIG. 6.

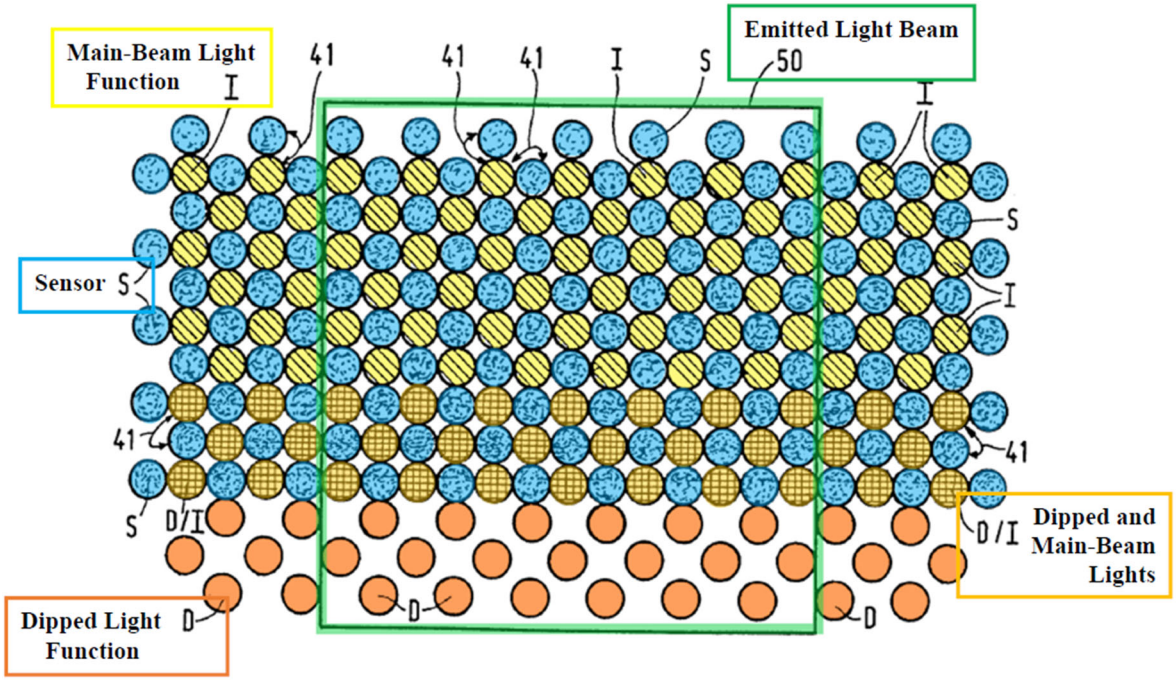

EX1010, FIG. 14 (annotated).

318. As I have explained throughout this declaration, e.g., above in Section VIII.A., arrays of independently controlled narrow-beam directional light sources, for example, light-emitting diode (LED) arrays, were developed with sufficient illuminance, directionality, and dynamic control as an alternative to traditional incandescent and gas discharge bulbs to provide adaptive light patterns and real-time feedback. EX1005, 1:5-3:44, 4:9-59; EX1010, 1:10-26, 9:18-26, 20:29-32; EX1015, 6-18, 21; EX1009, 16:6-25, 20:15-33.

319. And as I explained, for example, in Section VIII.A., such adaptive light control was well known. *See*, *e.g.*, EX1015, 3-6; EX1016, 1-19; EX1023, 514-515; EX1024, 819. EX1018, 33-36 ("A new light concept called Adaptive Light Control (ALC) is developed with the aim to improve night time traffic safety."); EX1019, 1-2 ("A major breakthrough in improving visibility, safety and comfort under all driving conditions is given by a headlamp with adjustable light intensity and beam pattern according to the vehicle speed, steering wheel angles and different driving conditions."); EX1020, 368, 370, 374-378 ("The car's sensors analyze and evaluate the driving situation and generate a light distribution that is adapted to that particular situation. In this process, not only the driver's comfort is increased but the visibility is improved also. This has a direct positive impact on traffic safety."); EX1024, 819 ("The challenge of such a system approach and the necessary and not so easy change towards performance and system requirements

was clearly seen - but also the prospects of possible safety improvement.”); EX1025, 202 (“One explanation could be that because of the available luminous flux in direction of driving, the driver has the ability to recognize the subsequent direction peripherally and can fixate other interesting objects in the road area. With other words the driver has more time for driving and the tiredness of the eyes could be reduced.”); EX1028, 844 (“The driver's comfort and safety can be improved considerably by adaptive motor vehicle headlighting, with the today's technical means in lighting design and manufacturing, as well as sensors and communication systems in cars.”). And it was well known that adaptive lighting used multiple directional light sources (e.g., multiple directional beams, such as light modules or beam contributors) to produce an adaptive light pattern by varying illumination characteristics including beam intensity, beam shape, beam color, beam direction around curved roads, and glare reduction. EX1017, 3-10 (“[A] curve or an intersection can be adaptively illuminated before reaching actually the point when the steering wheel is turned or the turn indicator is operated.”); EX1018, 33-36 (“The advantage of using Adaptive Light Control is shown in Fig. 5, where one observes a country road lit correctly. Instead of illuminating some fields or trees, the available light is directed dynamically in the direction where it is actually needed, enhancing the visual information for the driver.”); EX1019, 1-2 (“A major breakthrough in improving visibility, safety and comfort under all driving

conditions is given by a headlamp with adjustable light intensity and beam pattern according to the vehicle speed, steering wheel angles and different driving conditions."); EX1020, 368, 370, 374-378 ("The results show, that significant improvements can be proven by the adaptive headlamp system, without generating additional glare for oncoming traffic").

320. In view of the above, as combined, claims 7, 18, and 29 are rendered obvious by the Gotou-Karlsson combination.

7. [8.1]: "further comprising one or more cameras positioned to capture data indicating at least one other vehicle ahead of the motor vehicle;"

***See* [19.2] ("captured by at least one camera of the motor vehicle")**

***See* [30.2] ("captured by at least one camera of the motor vehicle")**

[8.2]/[19.1]/[30.1]: "wherein the instructions include instructions that, when executed by the one or more processors, enable the one or more processors to:"

[8.3]/[19.2]/[30.2]: "determine a position associated with the at least one other vehicle based at least in part on second data captured by at least one of the one or more cameras; and"

[8.4]/[19.3]/[30.3]: "control, based at least in part on the position, a second plurality of LED light sources providing light directed towards an area including at least a portion of the other vehicle to diminish glare to a driver of the other vehicle by a decrease to intensity of light directed towards and illuminating the area, the light that is directed towards and illuminating the area having lower intensity compared to light directed towards points laterally adjacent the area to either side."

321. These "instructions" [8.2]/[19.1]/[30.1] sub-elements recites that the processor can use the camera [8.1] data and instructions to *determine* the position of another vehicle [8.3]/[19.2]/[30.2] and then *control* the LEDs to diminish glare to the other driver [8.4]/[19.3]/[30.3]. Such instructions were well known in the art, as demonstrated below.

322. Gotou does not expressly recite using a camera in this way, e.g., to diminish glare to a driver of another vehicle.

323. However, Karlsson describes using a camera 23 in this way, e.g., using camera data to detect another vehicle and control the LEDs to provide an area of decreased light intensity to reduce glare for the other driver [8.1], [8.2], [19.1]/[30.1], [8.3]/[19.2]/[30.2], [8.4]/[19.3]/[30.3]. EX1010, 12:19-24, 1:10-26, 9:18-26, 20:29-32.

324. Karlsson's lighting device automatically varies a pattern of LEDs in response to control signals delivered by light-sensitive sensors, e.g., from a camera. EX1010, 2:30-35, 12:19-24. Karlsson's light beam 7's intensity and pattern are controlled to operate with an intensity and a pattern that are optimally adapted to the road and effectively prevent glaring or blinding of oncoming traffic. EX1010, 9:18-26.

325. Specifically, Karlsson explains that a desired pattern and intensity of light beam 33 is achieved by switching one or more LEDs on or off or adapting the intensity of the light emitted by an LED, which can be controlled individually or in groups. EX1010, 9:18-26.

326. Karlsson's express benefits would have been obvious to include into Gotou's system, as an additional way to improve overall safety of the combined Gotou-Karlsson system.

327. And as I have explained, for example above in Section VIII.A., such anti-glare or glare reduction features were well known. *See*, *e.g.*, EX1017, FIGS. 1-

3, 5; EX1009, 6:4-7; 16:6-25, 20:15-33 ("According to an aspect of some embodiments of the present invention, the pattern recognition application identifies oncoming vehicles and automatically adjusts illumination provided by the luxels to prevent glare from light provided by the luxels from blinding a driver of the oncoming vehicle.").

328. In view of the above, as combined, claims 8, 19, and 30 are rendered obvious by the Gotou-Karlsson combination.

8. [9.1]/[20.1]/[31.1]: "wherein:"

[9.2]/[20.2]/[31.2]: "the first plurality and second plurality of LED light sources include at least one common LED light source;"

[9.3]/[20.3]/[31.3]: "the control of the second plurality of LED light sources is based at least in part on third data received from a non-camera sensor of the motor vehicle;"

[9.4]/[20.4]/[31.4]: "the position includes at least one of:

a distance associated with the at least one other vehicle,

at least one elevation associated with the at least one other vehicle, or

a position within image data captured by at least one of the cameras;"

[9.5]/[20.5]/[31.5]: "the first data includes data from a non-camera sensor of the motor vehicle;"

[9.6]/[20.6]/[31.6]: "either one of the control of the first plurality of LED light sources or control of the second plurality of LED light sources is subsequent to and accommodative of the other;"

[9.7]/[20.7]/[31.7]: "the control of the second plurality of LED light sources additionally includes termination of light from at least one LED providing light directed to the area prior to the termination; and"

[9.8]/[20.8]/[31.8]: "the light pattern includes at least one of an illumination pattern or an emission pattern of the headlamps."

329. *See*, *e.g.*, Sections XI.B.7 and XI.B.8. These claims recite well known concepts. In short, at least one LED is common to both the first and second pluralities of LEDs [9.1]/[20.1]/[31.1], [9.2]/[20.2]/[31.2]; the second plurality of

LEDs is controlled based at least in part on third data received from a *non-camera sensor* [9.3]/[20.3]/[31.3]; and the first data includes data from a *non-camera* sensor [9.5]/[20.5]/[31.5].

330. I note that Gotou's map data is not from a camera sensor (among other examples in both Gotou and Karlsson), and thus in combination with Karlsson meets this portion of the feature related to both first and third data not from a camera sensor [9.3]/[20.3]/[31.3], [9.5]/[20.5]/[31.5]. EX1012, 3:52-67, 4:1-29, 5:8-6:3, 6:18-7:4, FIGS. 4, 7.

331. Additionally, controlling the second plurality of LEDs includes terminating light from an LED providing light directed to the area–simply turning an LED off [9.7]/[20.7]/[31.7], and controls an illumination pattern or an emission pattern of the headlamps [9.8]/[20.8]/[31.8].

332. Karlsson's system uses separate light sources (LEDs) for better controllability of the light direction. *See* EX1010, 14:1-15, 14:26-30, 2:30-35, 6:1-5. Removing the requirement for the entirety of Gotou's lamp unit 4 via a motor and other motion control mechanism, and instead expanding on Gotou's plural bulb control—with Karlsson's controllable LED array—would have been an obvious improvement to a POSA, leading to a more compact system with less moving parts, and taking advantage of the well known benefits of LEDs as a controllable light source, and to achieve an advanced and more active execution of

headlamp light output variations (direction, shape, intensity, etc.). *See*, *e.g.*, EX1022, 2:22-26, 3:44-47; EX1029, 987, 991.

333. Karlsson's grid of separate LEDs are controlled individually or in groups, and Figures 6 and 14 show a pattern and intensity (Figure 14) of a light beam 33 can be effected by switching one or more LEDs on or off, or by adjusting the intensity of the light emitted by an individual LED, thereby rendering the plurality of LEDs including at least one common LED light source. EX1010, 12:19-24, 1:10-26, 9:18-26, 20:29-32, 2:30-35. The Gotou-Karlsson combined system's iterative nature provides that control of the first and second LED light sources is subsequent to and accommodative of the other [9.6]/[20.6]/[31.6]. These disclosures cover [9.1]/[20.1]/[31.1], [9.2]/[20.2]/[31.2], [9.7]/[20.7]/[31.7], and [9.8]/[20.8]/[31.8].

334. The emitted light beam 50 is represented as a window that can shift left to right and top to bottom, produced by LEDs based on the data from inputs, e.g., from spotlight sensors S. *Id*.

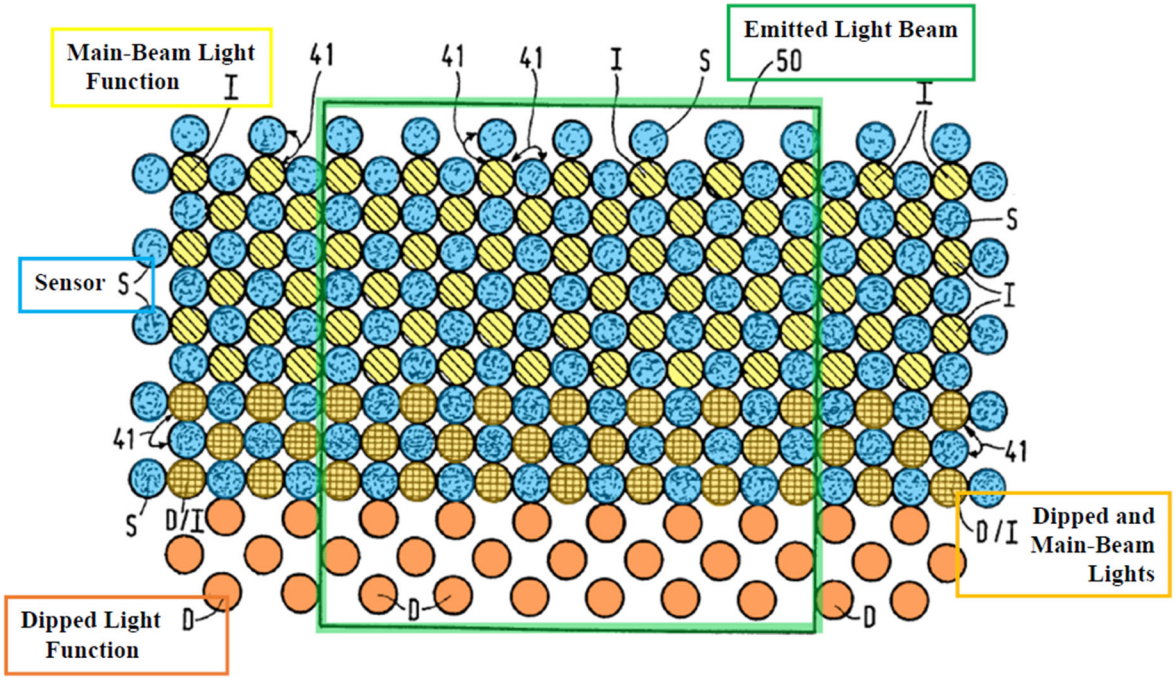

EX1010, FIG. 14 (annotated).

335. Finally, the additional alternate properties of "the position" [9.6]/[20.6]/[31.6] (i.e., the one determined and associated with the at least one other vehicle based at least in part on second data captured by at least one of the one or more cameras, as discussed *above*, Section XI.B.7.) Karlsson's lighting device automatically varies a pattern of emitted light in an efficient manner and with maximum sensitivity in response to control signals delivered by light-sensitive sensors—that detect the position determined and associated with the at least one other vehicle based at least in part on second data captured by at least one of the one or more cameras. EX1010, 2:30-35, 9:18-26, FIG. 3, 3:24-14:4, 19:18-20:3.

336. And as I explained, for example, in Section VIII.A., such adaptive light control was well known. *See*, *e.g.*, EX1015, 3-6; EX1016, 1-19; EX1023, 514-515; EX1024, 819. EX1018, 33-36 ("A new light concept called Adaptive Light Control (ALC) is developed with the aim to improve night time traffic safety."); EX1019, 1-2 ("A major breakthrough in improving visibility, safety and comfort under all driving conditions is given by a headlamp with adjustable light intensity and beam pattern according to the vehicle speed, steering wheel angles and different driving conditions."); EX1020, 368, 370, 374-378 ("The car's sensors analyze and evaluate the driving situation and generate a light distribution that is adapted to that particular situation. In this process, not only the driver's comfort is increased but the visibility is improved also. This has a direct positive impact on traffic safety."); EX1024, 819 ("The challenge of such a system approach and the necessary and not so easy change towards performance and system requirements was clearly seen - but also the prospects of possible safety improvement."); EX1025, 202 ("One explanation could be that because of the available luminous flux in direction of driving, the driver has the ability to recognize the subsequent direction peripherally and can fixate other interesting objects in the road area. With other words the driver has more time for driving and the tiredness of the eyes could be reduced."); EX1028, 844 ("The driver's comfort and safety can be improved considerably by adaptive motor vehicle headlighting, with the today's technical

means in lighting design and manufacturing, as well as sensors and communication systems in cars.”). And it was well known that adaptive lighting used multiple directional light sources (e.g., multiple directional beams, such as light modules or beam contributors) to produce an adaptive light pattern by varying illumination characteristics including beam intensity, beam shape, beam color, beam direction around curved roads, and glare reduction. EX1017, 3-10 (“[A] curve or an intersection can be adaptively illuminated before reaching actually the point when the steering wheel is turned or the turn indicator is operated.”); EX1018, 33-36 (“The advantage of using Adaptive Light Control is shown in Fig. 5, where one observes a country road lit correctly. Instead of illuminating some fields or trees, the available light is directed dynamically in the direction where it is actually needed, enhancing the visual information for the driver.”); EX1019, 1-2 (“A major breakthrough in improving visibility, safety and comfort under all driving conditions is given by a headlamp with adjustable light intensity and beam pattern according to the vehicle speed, steering wheel angles and different driving conditions.”); EX1020, 368, 370, 374-378 (“The results show, that significant improvements can be proven by the adaptive headlamp system, without generating additional glare for oncoming traffic”).

337. As I have explained throughout this declaration, e.g., above in Section VIII.A., arrays of independently controlled narrow-beam directional light sources,

for example, light-emitting diode (LED) arrays, were developed with sufficient illuminance, directionality, and dynamic control as an alternative to traditional incandescent and gas discharge bulbs to provide adaptive light patterns and real-time feedback. EX1005, 1:5-3:44, 4:9-59; EX1010, 1:10-26, 9:18-26, 20:29-32; EX1015, 6-18, 21; EX1009, 16:6-25, 20:15-33.

338. And as explained in Section VIII.A., such control using map data, e.g., GPS data, was well known. EX1025, 186; EX1026, 461-462 ("To obtain more accurate information on driving regions, it is advantageous to use data from a GPS navigation system."); EX1024, 815-816; EX1023, 514-515, 525; EX1027, Abstract; EX1023, 524 (Table 1 showing increased visibility along straight and curved roads with adaptive headlight systems); EX1025, 202, 205-206 ("[B]ecause of the available luminous flux in direction of driving, the driver has the ability to recognize the subsequent direction peripherally and can fixate other interesting objects in the road area."); EX1026, 451-452.

339. And as I have explained, for example above in Section VIII.A., such anti-glare or glare reduction features were well known. *See*, *e.g.*, EX1017, FIGS. 1-3, 5; EX1009, 6:4-7; 16:6-25, 20:15-33 ("According to an aspect of some embodiments of the present invention, the pattern recognition application identifies oncoming vehicles and automatically adjusts illumination provided by the luxels to

prevent glare from light provided by the luxels from blinding a driver of the oncoming vehicle.”).

340. In view of the above, as combined, claims 9, 20, and 31 are rendered obvious by the Gotou-Karlsson combination.

9. [10]: “further including one or more optical control elements for controlling light from one or more of the LED light sources.”

[21]: “wherein the instructions include instructions that, when executed by the one or more processors, enable the one or more processors to utilize one or more optical control elements included in the motor vehicle to control light from at least the first plurality or second plurality of the LED light sources.”

[32]: “utilizing one or more optical control elements included in the motor vehicle to control light from at least the first plurality or second plurality of the LED light sources.”

341. Gotou discloses optical control elements by using reflectors/sub-reflectors to change light distribution. EX1012, 8:20-22.

342. And Karlsson also discloses optical control elements such as reflectors and lenses throughout. *See*, *e.g.*, EX1010, 14:1-15, 5:4-10, 10:26-31. These are all optical control elements for controlling the LED light. *See also* EX1010, 11:3-25 (discussing “light modulator means).

343. In view of the above, as combined, claims 10, 21, and 32 are rendered obvious by the Gotou-Karlsson combination.

10. [11]/[22]/[33]: "wherein the optical control elements include at least one of one or more reflectors, refractors or lenses."

344. Gotou discloses optical control elements by using reflectors/sub-reflectors to change light distribution. EX1012, 8:20-22.

345. And Karlsson also discloses optical control elements such as reflectors and lenses throughout. See, e.g., EX1010, 14:1-15, 5:4-10, 10:26-31. These are all optical control elements for controlling the LED light. *See also* EX1010, 11:3-25 (discussing "light modulator means).

346. *See* above, Section XI.B.9.

347. The combination of Gotou and Karlsson disclose this feature.

348. In view of the above, as combined, claims 11, 22, and 33 are rendered obvious by the Gotou-Karlsson combination.

349. Thus, the Gotou-Karlsson combination renders obvious all claims in the '029 patent, rendering the '029 patent unpatentable.

XII. OBJECTIVE INDICIA DO NOT SUPPORT PATENTABILITY.

350. I understand that the obviousness analysis includes considering evidence of secondary indicia of nonobviousness (if available). I understand that any secondary indicia of nonobviousness must have a nexus, or a close connection, to the novel aspects of the claimed invention. I understand that secondary indicia of nonobviousness include the following: commercial success, long-felt but unmet

need, failure of others, copying, praise in the industry, and unexpectedly superior results as compared with the closest prior art.

351. Considering the information I have reviewed, my general knowledge of the field of headlamp systems, including adaptive headlamp systems, and publications within that and related fields, I am not aware of any objective evidence that might support the patentability of the claims of the ’029 patent. Further, from my review of the file history (EX1002) of the ’029 patent, I did not see that the applicant raised any secondary indicia of nonobviousness during prosecution. I am not otherwise aware of any publicly available evidence of secondary indicia of nonobviousness. Should any alleged secondary indicia of nonobviousness be presented, I reserve the right to provide an opinion thereon.

352. Counsel has informed me that Patent Owner submitted alleged evidence of secondary considerations in a reexamination proceeding involving U.S. Patent No. 9,955,551, but I understand that the Central Reexamination Unit did not address it. In any event, in my opinion, that evidence would not be applicable here at least because the ’029 patent involves different claims than in the ’551 reexamination. Again, should any alleged secondary indicia of nonobviousness be presented, I reserve the right to provide an opinion thereon.

XIII. CONCLUSION

In signing this Declaration, I recognize that this Declaration will be filed as evidence in an *inter partes* review before the Patent Trial and Appeal Board of the United States Patent and Trademark Office. I also recognize that I may be subject to cross-examination in the case and that cross-examination will take place within the United States. If cross-examination is required, I will appear for cross-examination within the United States during the time allotted.

I hereby declare that all statements made herein are made of my own knowledge and are true and that all statements made on information and belief are believed to be true; and further that these statements were made with the knowledge that willful false statements and the like so made are punishable by fine or imprisonment, or both, under Section 1001 of Title 18 of the United States Code.

Executed on this 22nd day of June, 2023, in Petaluma, California.

Scott Andrews