US 20080272889A1

(19) United States

(12) Patent Application Publication

Symons

(10) Pub. No.: US 2008/0272889 A1

(43) Pub. Date: Nov. 6, 2008

(54) NFC COMMUNICATORS AND NFC COMMUNICATIONS ENABLED DEVICES

(75) Inventor: **Peter Robert Symons**, Berks (GB)

Correspondence Address:
LERNER, DAVID, LITTENBERG, KRUMHOLZ & MENTLIK
600 SOUTH AVENUE WEST
WESTFIELD, NJ 07090 (US)

(73) Assignee: **INNOVISION RESEARCH & TECHNOLOGY PLC**, Cirencester (GB)

(21) Appl. No.: **11/795,434**

(22) PCT Filed: **Jan. 19, 2006**

(86) PCT No.: **PCT/GB06/00195**

§ 371 (c)(1), (2), (4) Date: **Jul. 17, 2007**

(30) **Foreign Application Priority Data**

Jan. 19, 2005 (GB) 0501115.0

Publication Classification

(51) **Int. Cl.**
H04Q 5/22 (2006.01)

(52) **U.S. Cl.** **340/10.1**

(57) **ABSTRACT**

A NFC communicator or NFC communications enabled device (**1** or **2** or **100***a*) has a data store (**108**) to store data, a coupler (**17** or **32** or **102**) to couple inductively with the magnetic field of a radio frequency signal and a signal generator (**109**) to supply a radio frequency signal to the coupler. A modulator (**110**) is provided to modulate a radio frequency signal in accordance with data and a demodulator (**114**) is provided to extract data from a modulated radio frequency signal inductively coupled to the coupler. A controller (**107**) enables the NFC communicator or NFC communications enabled device both to initiate near field radio frequency communication with another near field RF communicator and to respond to near field radio frequency communication initiated by another near field RF communicator. The NFC communicator or NFC communications enabled device also has a power deliver (**19** or **34** or **103**) that derives power from a radio frequency signal inductively coupled to the coupler to charge a chargeable power supply.

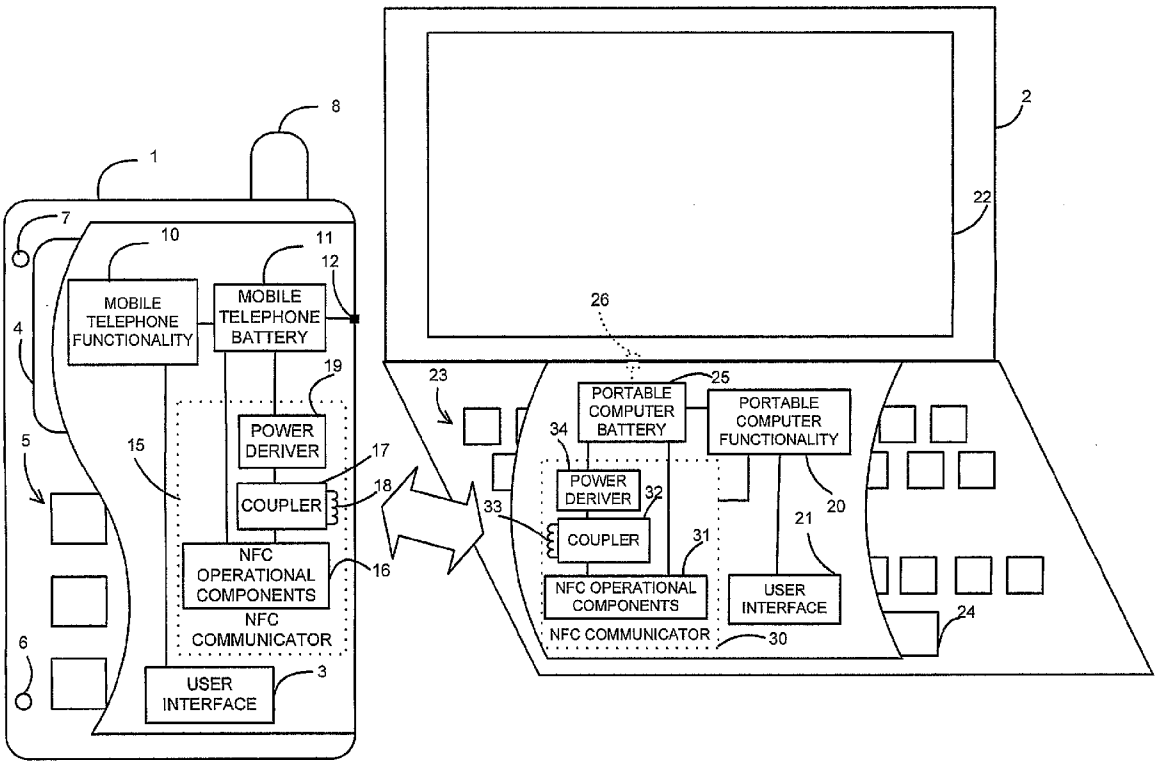

SAMSUNG EXHIBIT 1070

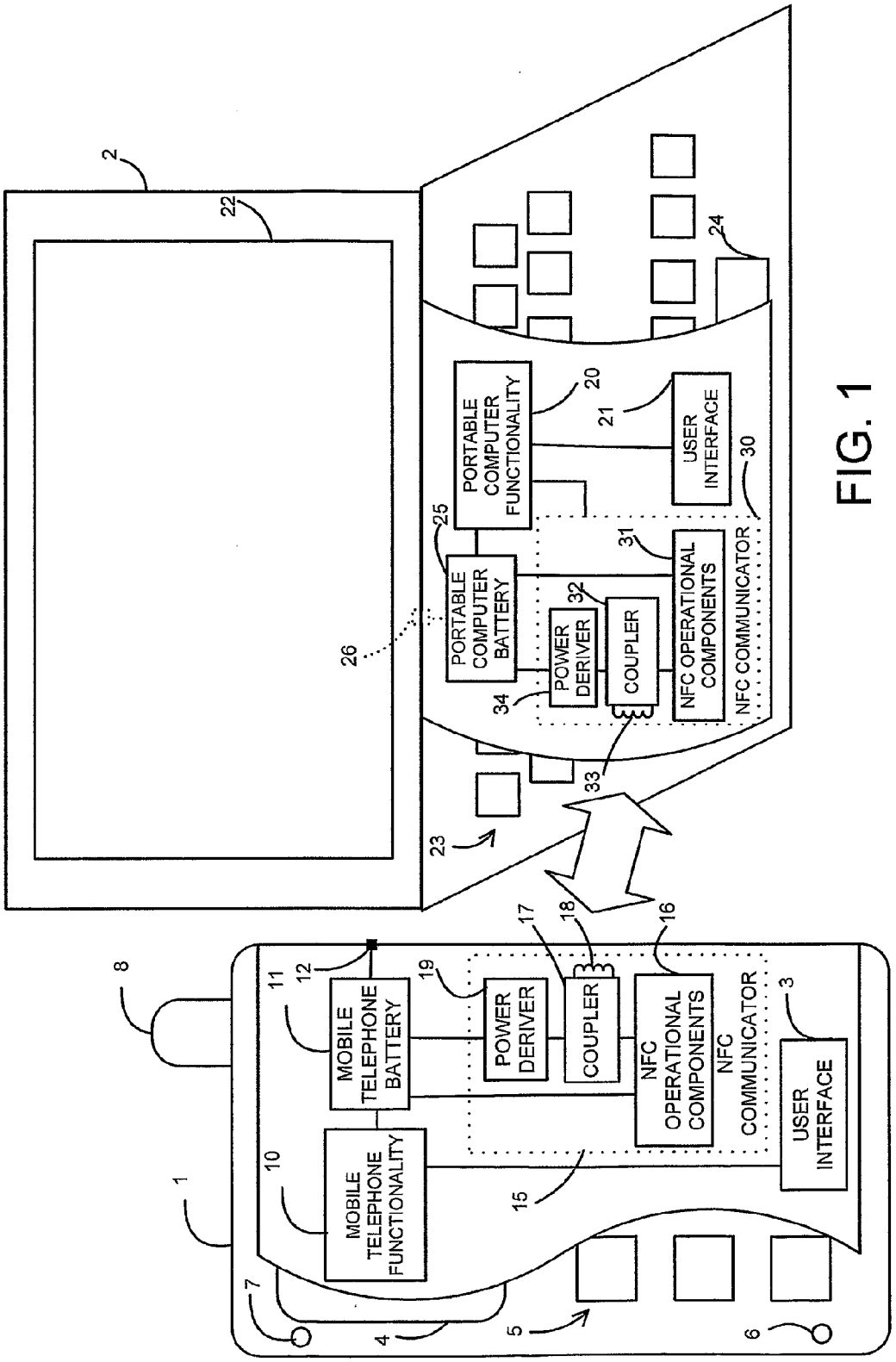
PORTABLE COMPUTER FUNCTIONALITY
USER INTERFACE
PORTABLE COMPUTER BATTERY
POWER DERIVER
COUPLER
NFC OPERATIONAL COMPONENTS
NFC COMMUNICATOR
MOBILE TELEPHONE BATTERY
MOBILE TELEPHONE FUNCTIONALITY
POWER DERIVER
COUPLER
NFC OPERATIONAL COMPONENTS
NFC COMMUNICATOR
USER INTERFACE
1
2
3
4
5
6
7
8
10
11
12
15
16
17
18
19
20
21
22
23
24
25
26
30
31
32
33
34

FIG. 1

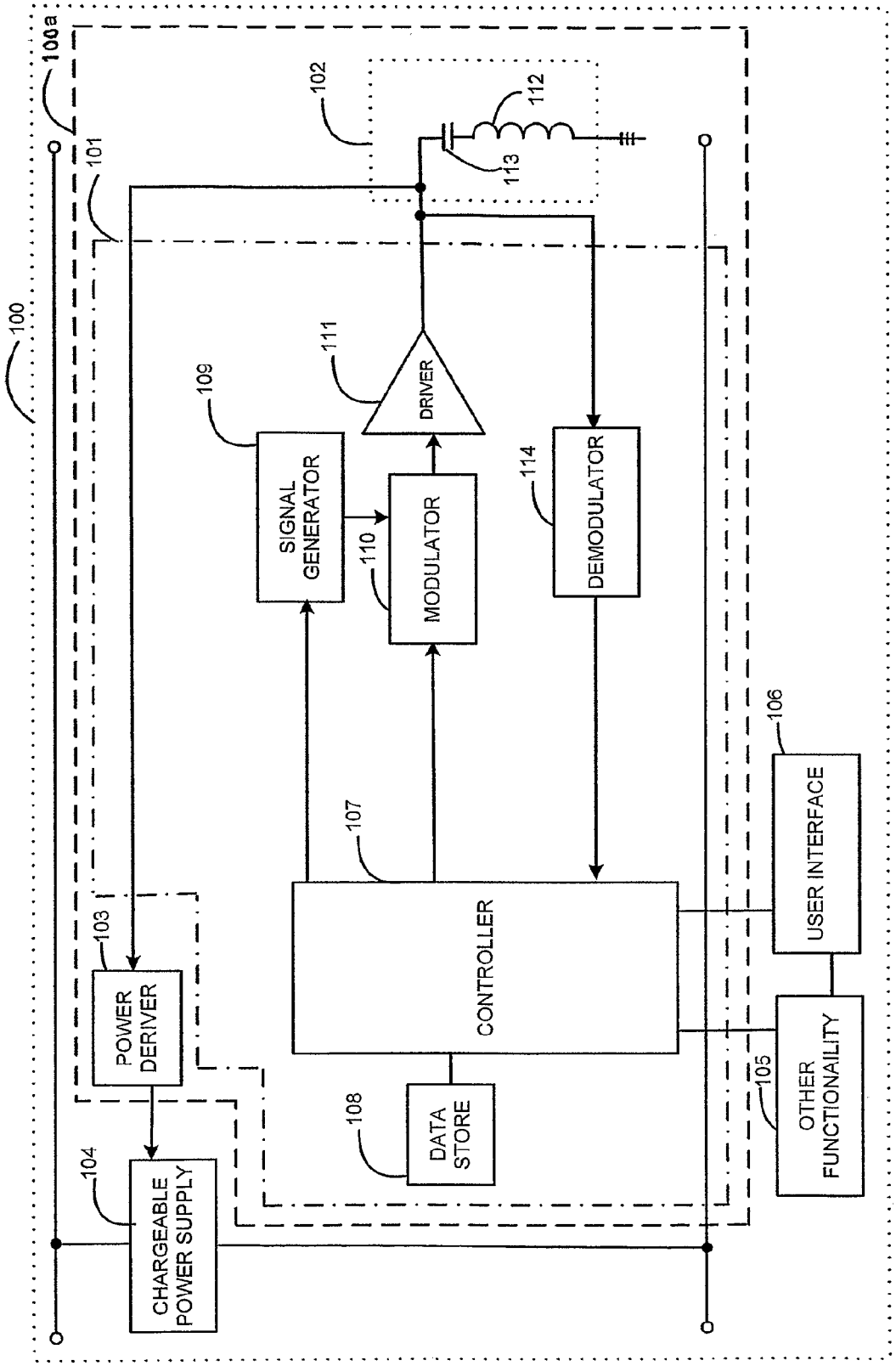
100a
100
101
102
112
113
111
DRIVER
109
SIGNAL GENERATOR
110
MODULATOR
114
DEMODULATOR
106
USER INTERFACE
107
CONTROLLER
103
POWER DERIVER
108
DATA STORE
105
OTHER FUNCTIONAILITY
104
CHARGEABLE POWER SUPPLY

FIG. 2

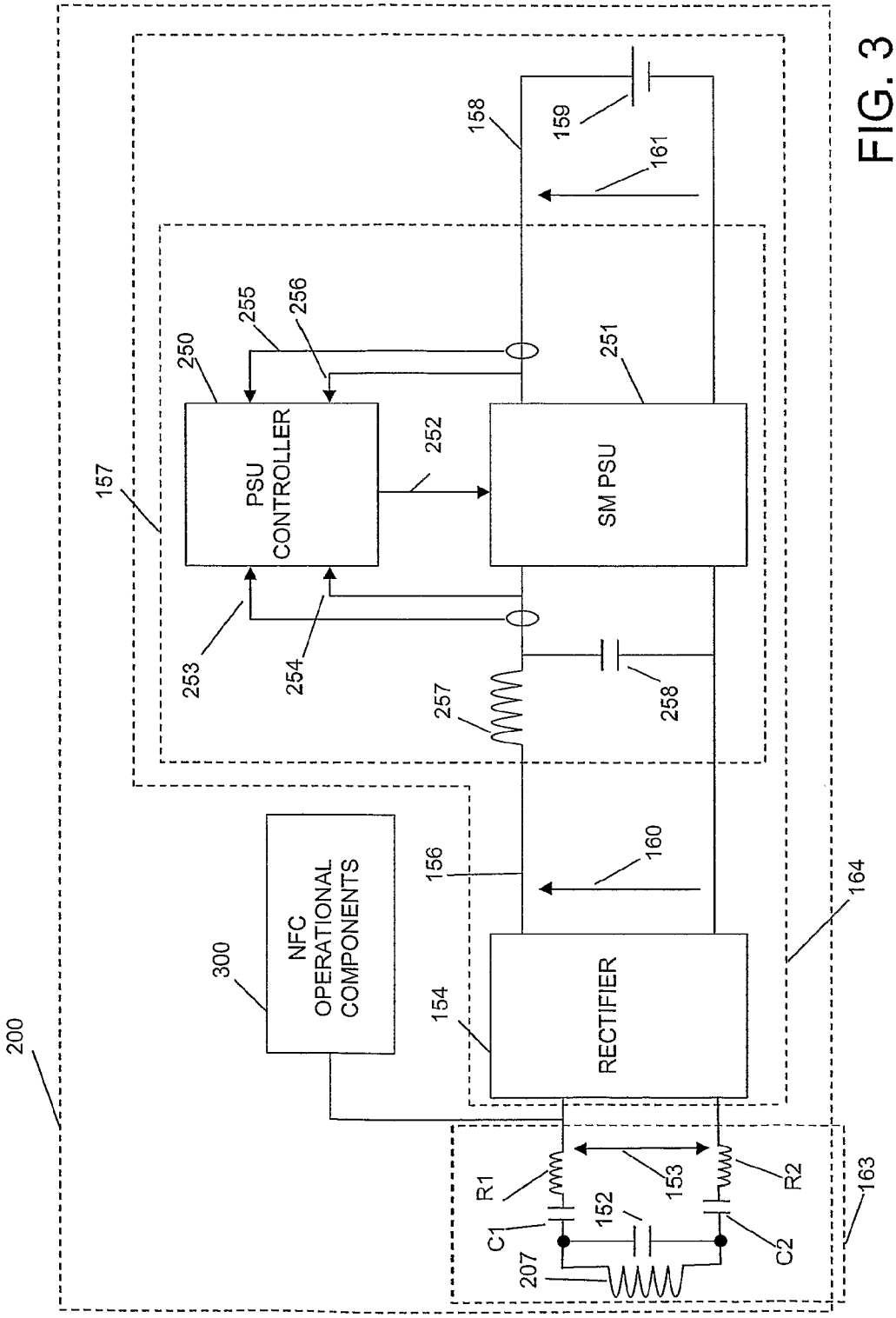
200
300
NFC OPERATIONAL COMPONENTS
157
250
PSU CONTROLLER
255
256
252
253
254
251
SM PSU
257
258
158
159
161
156
160
154
RECTIFIER
164
R1
C1
152
153
R2
C2
207
163

FIG. 3

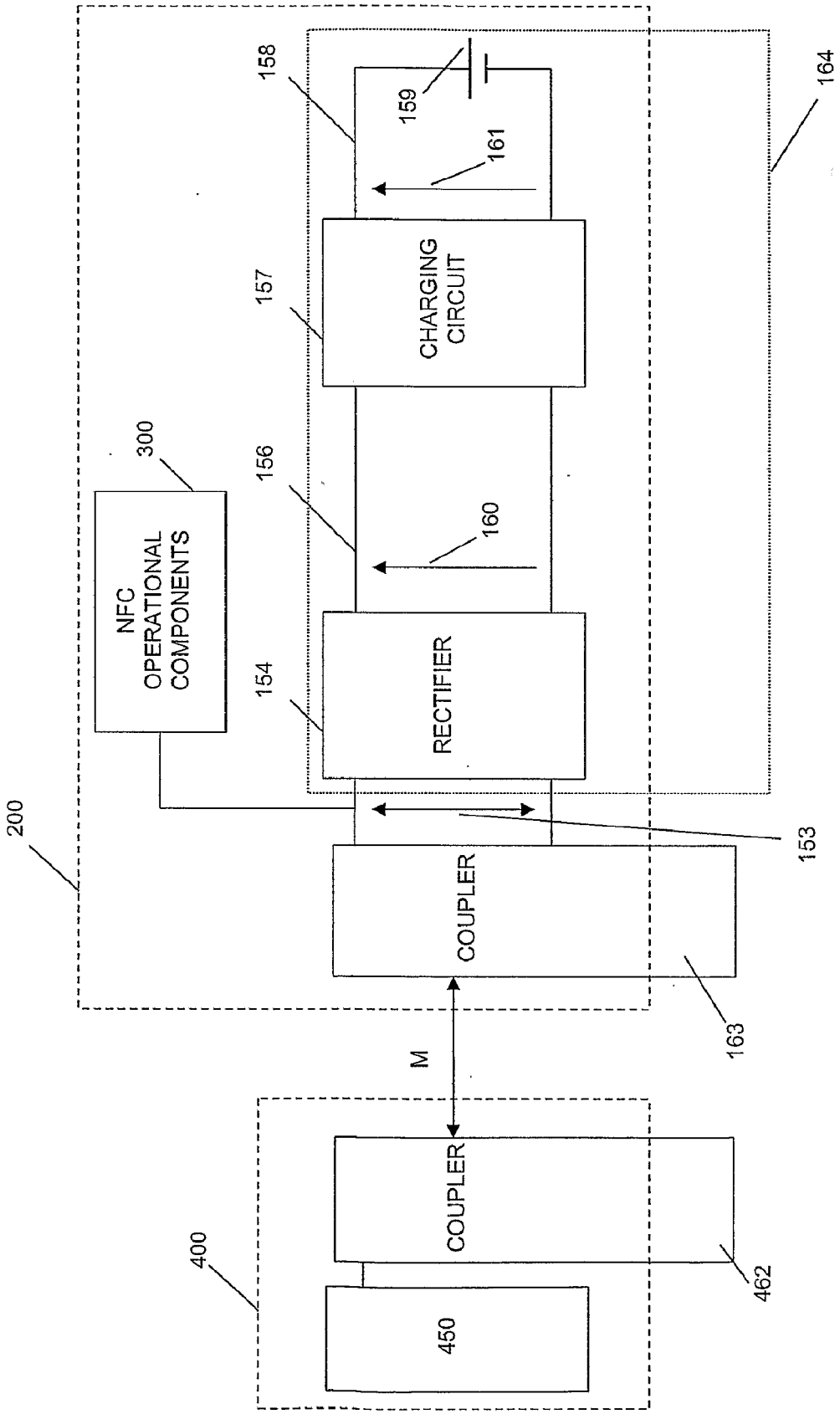
200
300
NFC OPERATIONAL COMPONENTS
154
156
157
158
159
161
160
RECTIFIER
CHARGING CIRCUIT
153
164
COUPLER
163
M
400
COUPLER
462
450

FIG. 4

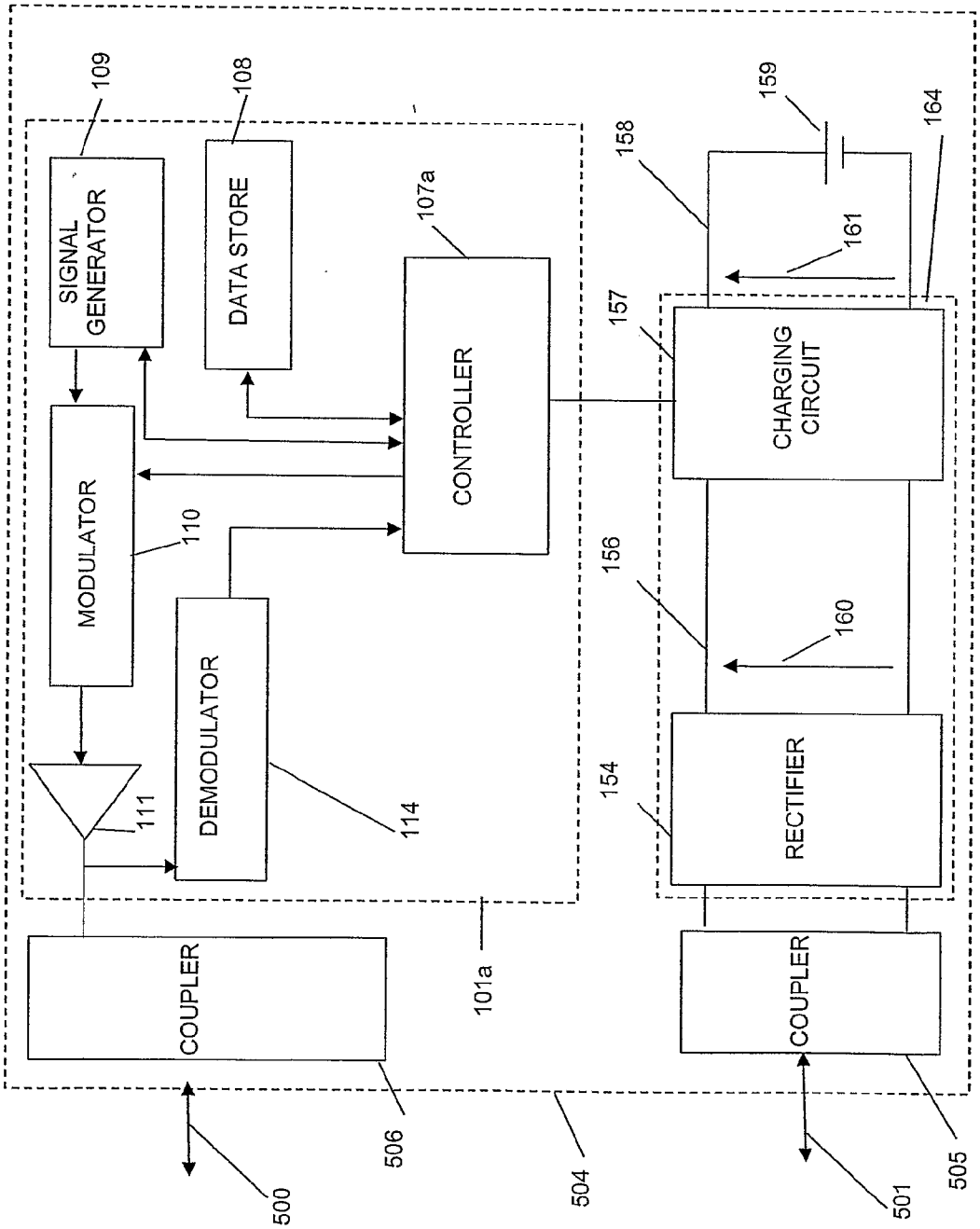
SIGNAL GENERATOR
109
DATA STORE
108
MODULATOR
110
CONTROLLER
107a
DEMODULATOR
114
111
COUPLER
506
500
101a
504
CHARGING CIRCUIT
157
158
159
161
164
RECTIFIER
154
156
160
COUPLER
505
501

FIG. 5

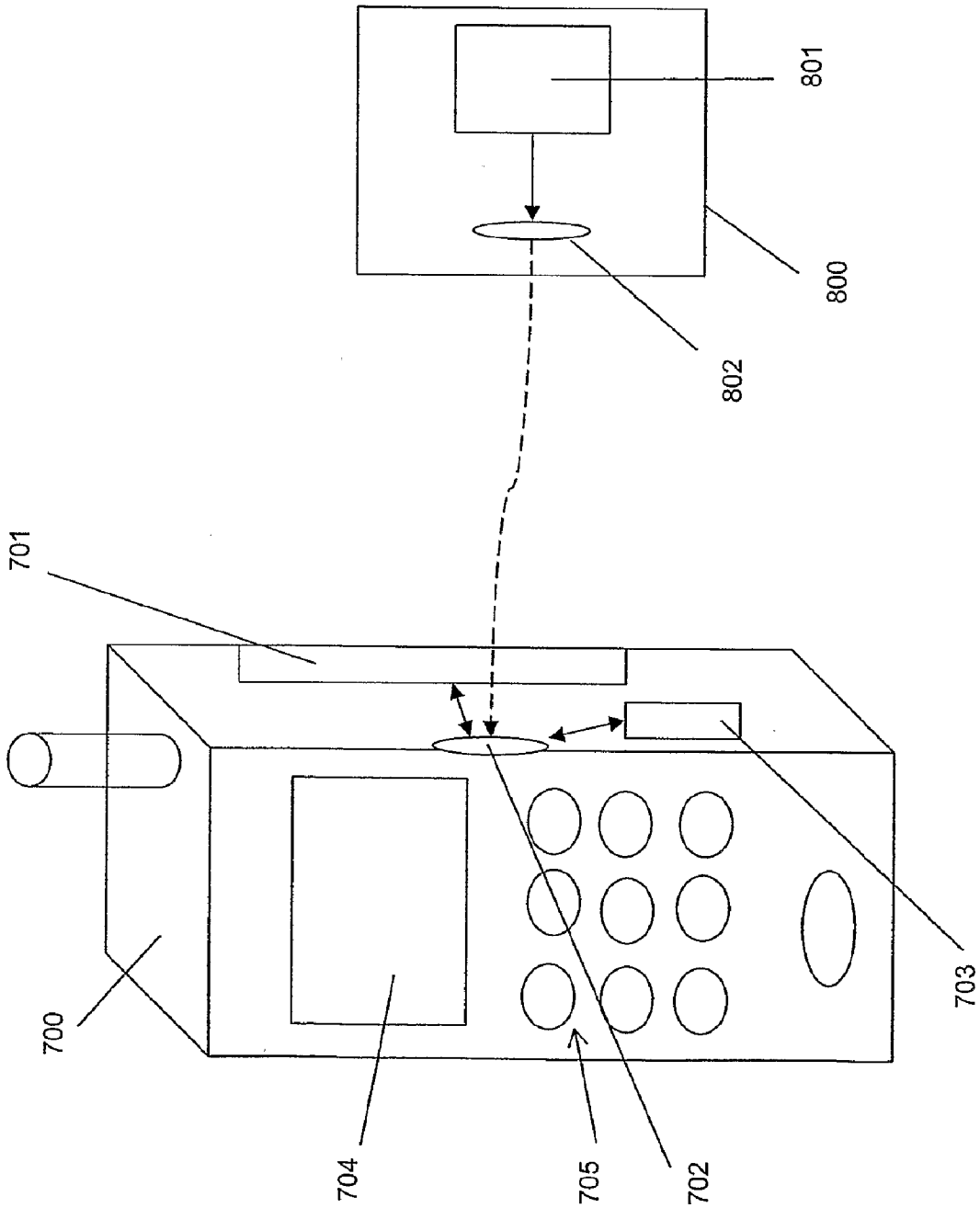

FIG. 6

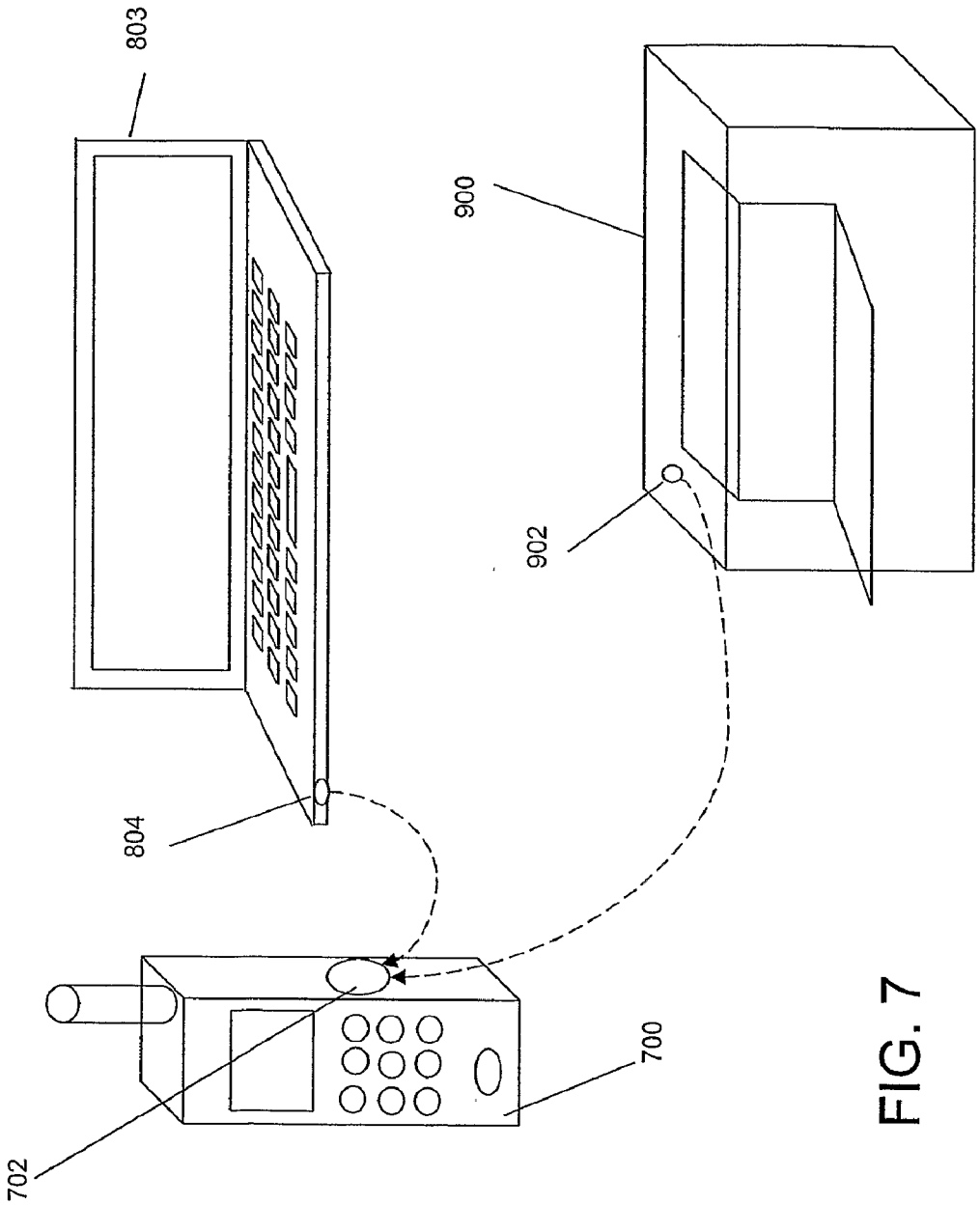

FIG. 7

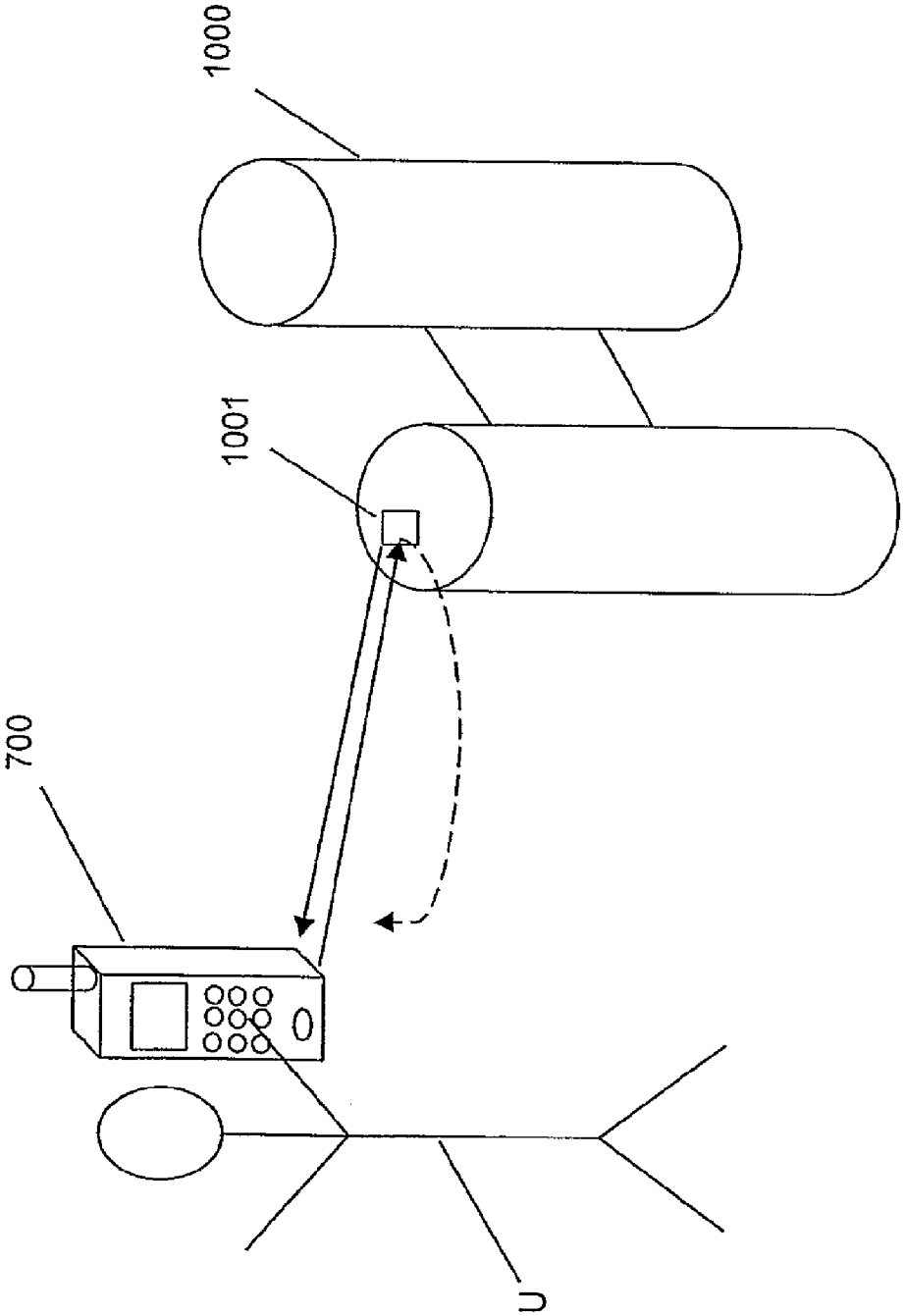

FIG. 8

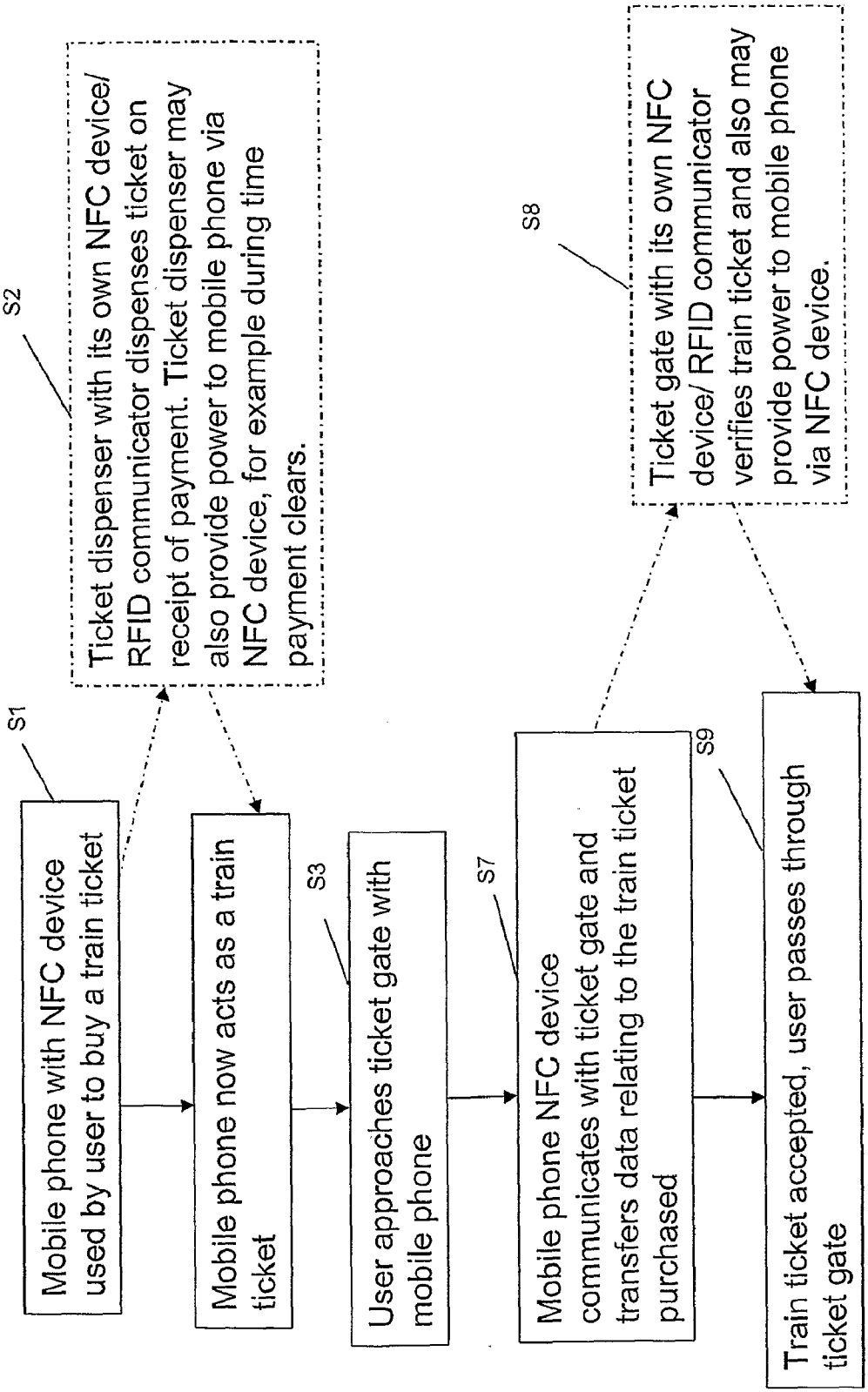
S1
Mobile phone with NFC device used by user to buy a train ticket
S2
Ticket dispenser with its own NFC device/ RFID communicator dispenses ticket on receipt of payment. Ticket dispenser may also provide power to mobile phone via NFC device, for example during time payment clears.
Mobile phone now acts as a train ticket
S3
User approaches ticket gate with mobile phone
S7
Mobile phone NFC device communicates with ticket gate and transfers data relating to the train ticket purchased
S8
Ticket gate with its own NFC device/ RFID communicator verifies train ticket and also may provide power to mobile phone via NFC device.
S9
Train ticket accepted, user passes through ticket gate

FIG. 9

NFC COMMUNICATORS AND NFC COMMUNICATIONS ENABLED DEVICES

[0001] This invention relates to NFC communicators and devices comprising NFC communicators.

[0002] Near field RF (radio frequency) communication requires an antenna of one near field RF communicator to be present within the alternating magnetic field (H field) generated by the antenna of another near field RF communicator by transmission of an RF signal (for example a 13.56 Mega Hertz signal) to enable the magnetic field (H field) of the RF signal to be inductively coupled between the communicators. The RF signal may be modulated to enable communication of control and/or other data. Ranges of up to several centimetres (generally a maximum of 1 metre) are common for near field RF communicators.

[0003] Near field communication may be referred to as near-field RFID (Radio Frequency Identification) or near-field communication. NFC communicators are a type of near field RF communicator that is capable of both initiating a near field RF communication (through transmission or generation of an alternating magnetic field) with another near field RF communicator and of responding to initiation of a near field RF communication by another near field RF communicator. The term "near field RF communicator" includes not only NFC communicators but also initiating near field RF communicators such as RFID transceivers or readers that are capable of initiating a near field RF communication but not responding to initiation of a near field RF communication by another near field RF communicator and responding near field RF communicators such as RFID transponders or tags that are capable of responding to initiation of a near field RF communication by another near field RF communicator but not of initiating a near field RF communication with another near field RF communicator. Hence NFC communicators can act as both RFID transceivers and RFID transponders and are able to communicate with other NFC communicators, RFID transceivers and RFID transponders.

[0004] Examples of near field RF communicators are defined in various standards for example ISO/IEC 18092, ISO/IEC 14443, ISO/IEC 15693 ISO/IEC 21481.

[0005] NFC communicators may be provided as standalone or discrete devices or may be incorporated within or coupled to larger electrical devices or host devices (referred to below as NFC communications enabled devices) to enable those devices to communicate by the near field with other near field RF communicators or devices incorporating or coupled to such near field RF communicators. When incorporated within a larger device or host, a NFC communicator may be a discrete entity or may be provided by functionality within the larger device or host. Examples of such larger devices or host devices are, for example, mobile telephones, portable computing devices (such as personal digital assistants, notebooks, lap-tops), other computing devices such as personal or desk top computers, computer peripherals such as printers, or other electrical devices such as portable audio and/or video players such as MP3 players, IPODs®, CD players, DVD players.

[0006] NFC communicators and host devices of course require a power supply to function. Where an NFC communicator or host device incorporating or coupled to an NFC communicator is powered by a chargeable power supply such as a rechargeable battery, then maintenance of a sufficient power supply is of prime importance to the functioning of both the host device and the NFC communicator, particularly where the NFC communicator or host device is being used in circumstances in which charging of the battery using a mains charging unit is not possible, for example because the user of the NFC communicator or host device does not have the mains recharging unit with them or is in a location without access to a mains power supply point. These power supply issues may be exacerbated for a host device because the NFC communicator may place an additional drain on the chargeable power supply of the host device. Additionally absence of suitable power supply may prevent or interrupt near field RF communication between one NFC communicator and another near field RF communicator. Depending on the application of such communication this could result in a failure to complete a required function or action, for example, a failure to obtain access to a location, refusal of a ticket to travel, inability to purchase goods or transfer data or information between electrical devices.

[0007] In one aspect, the present invention provides an NFC communicator or an NFC communications enabled device such as an a host device incorporating NFC functionality (either by way of a discrete NFC communicator incorporated within or coupled or attached to the host device or by way of NFC functionality provided as part of, for example integrated with, the other functionality of the host device) which has or is associated with a chargeable power supply and has a power deriver which is operable to charge the chargeable power supply from an RF signal inductively coupled to the NFC communications enabled device or NFC communicator when the NFC communications enabled device or NFC communicator is in the near field of that RF signal. The RF signal may be provided by another NFC communicator or NFC communications enabled device or other near field RF communicator such as an RFID reader or an RFID tag, if the RFID tag can provide sufficient power.

[0008] An NFC communications enabled device or NFC communicator embodying the invention may thus charge a chargeable power supply by near field RF communication and/or enable another near field RF communicator or communications enabled device embodying the invention to charge its chargeable power supply by near field RF communication, thereby enabling the NFC communications enabled device or NFC communicator to function even in circumstances where the chargeable power supply or one of a number of available power supplies has been drained or has only a small amount of power available and the user is not able to access a mains power supply to charge up the chargeable power supply. The received power may be used for some or all of the NFC communicator functionality and/or any host device functionality.

[0009] Embodiments of the present invention will now be described, by way of example, with reference to the accompanying drawings, in which:

[0010] FIG. **1** shows a representational diagram illustrating use of one NFC communications enabled device to charge a chargeable power supply of another NFC communications enabled device;

[0011] FIG. **2** shows a functional block diagram of an NFC communications enabled device;

[0012] FIG. **3** shows a functional block diagram of an NFC communicator illustrating one example of a power deriver that may be used to derive power to charge a chargeable power supply;

[0013] FIG. **4** shows a functional block diagram illustrating communication between the NFC communicator shown in FIG. **3** and another NFC communicator;

[0014] FIG. **5** shows a functional block diagram illustrating another example of an NFC communicator according to the present invention;

[0015] FIGS. **6** to **8** show diagrammatic representations of different examples of one NFC communications enabled device being used to charge a power supply of another NFC communications enabled device; and

[0016] FIG. **9** shows a flowchart for illustrating use of an NFC communications enabled device such as a mobile telephone to obtain a ticket and then to gain entry through an access gate controlled by that ticket.

[0017] With reference to the drawings in general, it should be understood that any functional block diagrams are intended simply to show the functionality that exists within the device and should not be taken to imply that each block shown in the functional block diagram is necessarily a discrete or separate entity. The functionality provided by a block may be discrete or may be dispersed throughout the device or throughout a part of the device. In addition, the functionality may incorporate, where appropriate, hard-wired elements, software elements or firmware elements or any combination of these. The NFC communicator may be provided wholly or partially as an integrated circuit or collections of integrated circuits.

[0018] Referring now specifically to FIG. **1**, there is shown a representational diagram illustrating use of one NFC communications enabled device to charge a chargeable power supply of another NFC communications enabled device. In FIG. **1** the representations of the NFC communications enabled devices have been show partly cut-away and the functionality provided by the NFC communications enabled devices illustrated by way of a functional block diagram within the NFC communications enabled device.

[0019] As shown in FIG. **1**, one NFC communications enabled device comprises a mobile telephone (cellphone) **1** and the other NFC communications enabled device comprises a portable computer **2** such as a notebook or laptop computer.

[0020] The mobile telephone **1** has the usual features of a mobile telephone including mobile telephone functionality **10** (in the form of, usually, a programmed controller, generally a processor or microprocessor with associated memory or data storage, for controlling operation of the mobile telephone in combination with a SIM card), an antenna **18** for enabling connection to a mobile telecommunications network, and a user interface **3** with a display **4**, a keypad **5**, a microphone **6** for receiving user voice input and a loudspeaker **7** for outputting received audio to the user. The mobile telephone also has a chargeable battery **11** coupled to a charging socket **12** via which a mains adapter (not shown) may be connected to enable charging of the battery **11**. The mobile telephone **1** may have an alternative or additional power supply (not shown), for example a reserve battery or emergency battery.

[0021] Similarly the portable computer **2** has the usual features of a portable computer including portable computer functionality **20** in the form of, usually, a processor with associated memory in the form of ROM, RAM and/or hard disk drive, one or more removable media drives such as a floppy disk drive and/or a CDROM or DVD drive, and possibly a communications device for enabling the portable computer to connect to a network such as the Internet. The portable computer **2** also includes a user interface **21** including a display **22**, a keyboard **23** and a pointing device, as shown a touchpad **24**. The portable computer **2** also has a chargeable battery **25** coupled to a charging socket **26** via which a mains adapter (not shown) may be connected to enable charging of the battery **25**.

[0022] In addition, as shown in FIG. **1**, both NFC communications enabled devices **1** and **2** have an NFC communicator **15** and **30**. As shown, the NFC communicators **15** and **30** are incorporated within the larger devices and, as with the other functional blocks, may be discrete entities within the host devices or may be provided by features dispersed throughout or integrated within the host device or a part of the host device.

[0023] Each NFC communicator **15** and **30** comprises NFC operational components **16** and **31** for, as will be described below, enabling control of the NFC functionality and generation, modulation and demodulation of an RF signal. Each NFC communicator **15** and **30** also comprises a coupler **17** and **32** comprising an inductor or coil in the form of an antenna **18** and **33**. The couplers **17** and **32** enable an alternating magnetic field (H field) generated by the antenna of one near field communicator **15** (or **30**) by transmission of an RF signal (for example a 13.56 Mega Hertz signal) to be inductively coupled to the antenna of the other near field communicator **30** (or **15**) when that antenna is within the near field of the RF signal generated by the one near field communicator **15** (or **30**).

[0024] The NFC communicators **15** and **30** are coupled to the mobile telephone and portable computer functionality **10** and **20**, respectively, to enable data and/or control commands to be sent between the NFC communicator and the host device and to enable user input to the NFC communicator. Communication between the user interface **3** or **21** and the NFC communicator **15** or **30** is via the host device functionality **11** or **20**, respectively. In addition, each of the NFC communicators **15** and **30** is coupled to the battery **11** and **25** of its host device **1** and **2** so that each NFC communicator is powered by the chargeable power supply of its host device. Alternatively or additionally the NFC communicators **15** and **30** may be connected to their own chargeable power supplies (not shown).

[0025] Each NFC communicator **15** and **30** also comprises a power deriver **19** and **34** coupled between the coupler **17** and **32** and the host chargeable battery **11** and **25** for, when the coupler **17** or **32** is in the near field range of an antenna transmitting an RF signal, charging the host chargeable battery **11** or **25** using a charging current or voltage derived from the inductive coupling to the coupler **17** or **32** of the alternating magnetic field (H field) generated by that RF signal. Additionally or alternatively such power deriver **19** and **34** may be coupled to additional power supplies within the host device or specific to the NFC communicators **15** and **30**, for example a button cell battery, other small battery or capacitor.

[0026] Charging of a chargeable power supply of an NFC communications enabled device may, for example, be initiated in response to user input to the user interface (**3** or **21** in FIG. **1**) of the NFC communications enabled device that requires charging. For example, when a user discovers that their NFC communications enabled device is low on power, then the user can bring that NFC communications enabled device into the near field range of another NFC communications enabled device that is not low on power to enable the

power deriver to charge up the chargeable power supply. Thus in the scenario shown in FIG. **1**, if a user discovers that their NFC communications enabled mobile telephone **1** is so low on power that they cannot make a call and they are without their mobile telephone charging unit or have no access to a mains power outlet, they can use their NFC communications enabled portable computer **2** to charge up the mobile telephone battery. Conversely, if the user discovers that their NFC communications enabled portable computer **2** is low on power and they are without their portable computer charging unit or have no access to a mains power outlet, they can use their NFC communications enabled mobile telephone **1** to charge up the portable computer battery.

[0027] As another possibility, charging may occur automatically when an NFC communications enabled device with a battery which is not fully charged is in the near field of a suitable RF signal. For example, when the battery is low, the NFC communicator **15** may be operable to couple to any near field RF signal and through the power deriver **19**, derive power from that near field RF signal.

[0028] As another possibility, charging may occur under the control of at least one of the host device functionality and the NFC operational components of at least one of the NFC communications enabled device being charged and the NFC communications enabled device providing the charge. As an example, the NFC operational components (**16** or **31**) of the NFC communications enabled device to be charged (**1** or **2**) may allow charging to occur only when that RF signal is not being used to communicate control or other data or when specific permission has been received from the NFC communications enabled device providing the RF signal from which charge is to be derived so that one user may not, without authorization, charge their NFC communications enabled device using somebody else's NFC communications enabled device. Users with multiple NFC communications enabled devices may also be able to set those devices such that charging is automatic when one device begins to get low on battery, for example in FIG. **1** settings on the portable computer **2** may be set by the user to provide power to the mobile telephone **1** whenever the mobile telephone battery requires charging.

[0029] It will be appreciated that FIG. **1** shows only examples of types of host devices. A host device may be another type of electrical device such as a personal digital assistant (PDA), other portable electrical device such as a portable audio and/or video player such as an MP3 player, an IPOD®, CD player, DVD player or other electrical device.

Also, rather than being incorporated within the host device, the NFC communicator **15** or **30** may be associated with the host device, for example by a wired or wireless coupling that is capable of power transfer. In such a case, a housing of the NFC communicator may be physically separate from or may be attached to the housing of the host device; in the later case, the attachment may be permanent once made or the NFC communicator may be removable. For example, the NFC communicator may be housed within: a housing attachable to another device; a housing portion, such as a fascia of the NFC communications enabled device or an other device; an access card; or may have a housing shaped or configured to look like a smart card. For example an NFC communicator may be coupled to a larger device by way of a communications link such as, for example, a USB link, or may be provided as a card (for example a PCMCIA card or a card that looks like a smart card) which can be received in an appropriate slot of the larger or host device.

[0030] In addition, one or both of the NFC communications enabled devices may be a standalone NFC communicator, that is it may have no functionality beyond its NFC communications functionality.

[0031] FIG. **2** shows a functional block diagram of an NFC communications enabled device **100** in accordance with the invention to illustrate in greater detail one way in which the NFC operational components of an NFC communications enabled device embodying the invention may be implemented.

[0032] In this example, the NFC communications enabled device **100** comprises an NFC communicator **100***a* having NFC operational components **101**, an inductive coupler **102** and a power deriver **103** coupled between the coupler **102** and a chargeable power supply **104** chargeable by the power deriver **103**. The NFC communications enabled device **100** may or may not also have or be capable of being connected or coupled with at least one of other functionality **105** (for example functionality of a host device such as described above) and a user interface **106**.

[0033] In the example shown in FIG. **2**, the coupler **102** comprises a series connection to earth (ground) of a capacitor **113** and an inductor **112**. As another possibility a parallel circuit configuration may be used, one example of which will be described below with reference to FIG. **3**. The exact design of the inductor and inductive coupler will depend on the functionality, range and emission standard compliance requirements, plus the environment within which the NFC communications enabled device **100** is designed to operate.

[0034] The NFC operational components **101** comprise a controller **107** for controlling overall operation of the NFC communicator. The controller **107** is coupled to a data store **108** for storing data (information and/or control data) to be transmitted from and/or data received by the NFC communications enabled device. The controller **107** may be a microprocessor, for example a RISC processor or other microprocessor or a state machine. Program instructions for programming the controller and/or control data for communication to another near field RF communicator may be stored in an internal memory of the controller and/or the data store.

[0035] The NFC operational components **101** also comprise a demodulator **114** coupled between the coupler **102** and the controller **107** for demodulating a modulated RF signal inductively coupled to the coupler **102** from another near field RF communicator in near field range and for supplying the thus extracted data to the controller **107** for processing.

[0036] In addition the NFC operational components **101** include components for enabling modulation of an RF signal to enable data to be communicated to another near field RF communicator in near field range of the NFC communicator **100***a*.

[0037] As shown in FIG. **2**, the NFC operational components **101** comprise a modulator **110** coupled via a driver **111** to the coupler **102**. The modulator **110** may, for example, switch a transistor (for example a FET) coupled across the inductor **112** on and off in accordance with the data supplied by the controller **107**, thereby modulating the load on the inductor **112** and thus an RF signal supplied by the NFC communicator in accordance with that data. Alternatively or additionally modulation of an RF signal may be provided by sine synthesis (which for example may generate a PDM (Pulse Density Modulation) signal to the driver **111**). As a further alternative the NFC communicator may comprise an emulator intended to enable interference or simulated load

modulation of a received RF signal as described in greater detail in WO 2005/045744, the whole contents of which are hereby incorporated by reference. In this latter case, the signal generator will be replaced by the circuitry described in WO 2005/045744 that enables interference or simulated load modulation of a received RF signal.

[0038] The NFC communicator **100***a* may operate in an initiator mode or a target mode, dependent on the mode to which the NFC communicator is set. The mode may be determined by the controller **107** or may be determined in dependence on the nature of a received near field RF signal. When in initiator mode, an NFC communicator initiates communications with any compatible near field RF communicator capable of responding to the initiator mode NFC communicator (for example an NFC communicator in target mode or an RFID tag or transponder) that is in its near field range, while when in target mode an NFC communicator waits for a communication from a compatible near field RF communicator that is capable of initiating near field communication a (for example an NFC communicator in initiator mode or an RFID reader or transceiver). As thus used, compatible means operable at the same frequency and in accordance with the same protocols, for example in accordance with the protocols set out in various standards such as ISO/IEC 18092, ISO/IEC 21481, ISO/IEC 14443 and ISO/IEC 15693.

[0039] When in initiator or target mode, the NFC communicator may communicate in accordance with an active or passive protocol. When using an active protocol the initiating NFC communicator will transmit an RF field and following completion of its data communication turn off its RF field. The responding RF communicator (target) will then transmit its own RF field and data before again turning off the RF field and so on. When using a passive protocol the NFC communicator (initiator) will transmit and maintain its RF field throughout the entire communication sequence. The protocol used will depend on instructions received form the controller **107** and the response received from a responding RF communicator.

[0040] When an NFC communicator as shown in FIG. **2** is in initiator mode (and therefore is transmitting an RF signal), the controller **107** is configured to control the modulator and signal generator to transmit a modulated or un-modulated RF signal through driver **111**. Modulation will be in accordance with at least one of data held in data store **108** and control data held within controller **107**. The data communicated will depend upon the communications protocol under which the NFC communicator is operating and the data stored in the data store **108**. For example, the initial data communicated may be a wake-up instruction (for example REQA) to any receptive device (for example an NFC communicator in target mode or an RFID transponder) in near field range.

[0041] When an NFC communicator as shown in FIG. **3** is operating in target mode, it will wait to receive an RF signal from an initiator mode NFC communicator or RFID reader through the coupler **102**. On receipt of such an RF signal, the demodulator **114** will demodulate the RF signal to extract any data carried by the RF signal and will supply a digital data signal to the controller **107**. The demodulated signal may be, for example, a wake-up instruction (for example REQA). The controller **107** will respond to such received data in accordance with its programming and/or data stored in the data store **108**. Response in target mode may be through load modulation of the received RF signal (through modulation of load on inductor **112**). Alternatively certain NFC communicators may respond through interference with the received RF signal or alternatively through transmission of a modulated RF signal (as described above).

[0042] The initial response of the controller **107** in the target mode to a wake up request may be to modulate the RF signal with an ATQA response or equivalent. Thereafter data communication between the initiator and target will occur by modulation of the RF signal or signals in accordance with the communications protocol under which the communicating devices operate or have agreed to operate where there is more then one possibility. Any suitable form of modulation scheme may be used, for example FSK (Frequency Shift Key) modulation, PSK (Phase Shift Key) modulation, PDM (Pulse Density Modulation), amplitude modulation, or load modulation.

[0043] As set out above, the NFC communications enabled device shown in FIG. **2** has its own chargeable power supply **104** (which may be part of the NFC communicator or may be the power supply of a host device) and when that chargeable power supply **104** is drained or is not fully charged, the power deriver **103** of the NFC communications enabled device may derive power from any suitable RF signal within near field range of the coupler **102** so as to charge the chargeable power supply **104**. A suitable RF signal may be for example an RF signal supplied by another NFC communications enabled device or near field RF communicator (for example an RFID reader or an RFID tag if the tag is capable of supplying sufficient power).

[0044] As will be appreciated from the above, the controller **107** is operable to control the NFC communications process to, for example, ensure that the NFC communicator operates in compliance with the appropriate communications protocol (s) and to control the timing (using its own clock where appropriate), manner and mode of operation of the NFC communicator. The controller **107** is also operable to control communication with any host device, where required. Depending upon the circumstances, a change in functionality of the NFC communicator or of any host device may arise as a result of communication with another NFC communications enabled device. Alternatively communication may result in a change to the data stored in either one or both of the data store **108** and controller **107**.

[0045] The functionality of the controller **107** is shown in FIG. **2** as being entirely within the NFC communicator. As other possibilities, the functionality of the controller **107** may be entirely within any host device controller or distributed between the NFC communicator and the host device. As a further possibility, certain control functionality may reside within a separate unit which is attachable or removable or alternatively only used for certain transactions, for example a security device or ESD device which may only be used for payment transactions. Where the functionality of the controller **107** is within a separate unit or within any host device, then instead of the controller **107** the NFC communicator will have a coupling, possibly including an appropriate interface, to that controller.

[0046] As shown in FIGS. **1** and **2**, the data store **108** comprises a memory within the NFC communicator. As another possibility, the data store **108** may be comprised within any host device or shared or co-located memory device or data storage means. For example the data store may reside within the host device and all data may be centrally held within such host device. Alternatively data may be stored both within the NFC communicator (for example data relevant to operation of the NFC functionality) and within a memory (not

shown) within the host device (for example data relevant to the operation characteristics of the host device). The data storage means may be read only or may be read/write, depending upon whether data is to be written to as well as read from the data store.

[0047] FIG. **3** shows a functional block diagram of an NFC communicator to illustrate one example of a power deriver that may be used in an NFC communications enabled device embodying the invention. The power deriver **103** shown in FIG. **2** may be of the type shown in FIG. **3**.

[0048] The NFC communicator **200** shown in FIG. **3** again has an inductive coupler **163** coupled to NFC operational components **300** (shown as a single functional block **300** in FIG. **3**) and to a power deriver **164** which is coupled to a chargeable power supply **159** that, although not shown in FIG. **3**, is coupled to provide power to the various components of the NFC communicator. Although not shown in FIG. **3**, the NFC communicator **200** may (or may not) have other functionality and a user interface as shown in FIG. **2**. As another possibility the other functionality and/or user interface may be provided by a host device incorporating the NFC communicator or to which the NFC communicator is attached or coupled. The power supply **159** may comprise a power supply of the NFC communicator, the host device or both. The NFC operational components **300** may be as described above with reference FIG. **2**.

[0049] In the example shown in FIG. **3**, the coupler has a parallel circuit configuration and comprises a parallel coupling of an inductor **207** in the form of an RF antenna and a capacitor **152** with one end of the parallel coupling being coupled to the power deriver **164** by a first series connection of a capacitor C**1** and a resistor R**1** and the other end of the parallel coupling being coupled to the power deriver **164** by a second series connection of a capacitor C**2** and a resistor R**2**. As another possibility a series type inductive coupler such as that shown in FIG. **2** may be used. As set out above, the exact design of the inductor and inductive coupler will depend on the functionality, range and emission standard compliance requirements, plus the environment within which the NFC communications enabled device is designed to operate.

[0050] As shown in FIG. **3**, the power deriver **164** comprises a rectifier **154** for generating a rectified power output (represented by arrow **160**) from an RF signal coupled to the coupler **163** and a charging unit **157** for generating a charging power output (represented by arrow **161**) from the rectified output.

[0051] The rectifier **154** may be any suitable form of rectifier, for example a bridge rectifier, half-wave rectifier, or voltage doubler. Where the NFC communicator or NFC communication enabled device is comprised within an integrated circuit or series of integrated circuits, the rectifier **154** may advantageously be produced by an on-chip rectification circuit functioning as a bridge rectifier.

[0052] The charging unit **157** is desirably configured to control the charging process so as to achieve charging of the chargeable power supply **159** in the most efficient manner possible and to optimize the power transfer according to the charging requirements of the chargeable power supply **159**.

[0053] The chargeable power supply **159** is shown in FIG. **3** as a battery and may consist of one or more cells. The chargeable power supply **159** may however be of any form that can be charged or re-charged via electrical power, such as for example a capacitor, button cell, battery.

[0054] FIG. **3** shows a functional block diagram of one suitable form of charging unit **157**. As shown in FIG. **3**, the charging unit **157** comprises a switched mode power supply unit (SM PSU) **251** controlled by power supply unit (PSU) controller **250** via signal line **252**. The power supply controller **250** may be a microcontroller, microprocessor, digital signal processor or state machine, for example.

[0055] As set out above, the fact that the PSU controller **250** is shown as a separate functional block does not necessarily mean that it is a separate entity, for example the power supply unit (PSU) controller **250** may be separate from or included within any other controller functionality within the NFC communicator **200** for example within the controller **107** shown in FIG. **2**.

[0056] The rectified output voltage node **156** of the rectifier **154** is coupled to an input of the SM PSU **251**. This coupling may be via an inductor **257** to make power-factor corrections in order to increase power transfer efficiency as is well known to persons skilled in the art. If present, then, for a typical RF input frequency of 13.56 MHz, the inductor **257** will typically have a value of between 10-100 micro Henries. It is advantageous, but not essential, to include the inductor **257**. As is standard practice for power derivation and supply, a capacitor **258** is coupled across the input to the SM PSU **251** to smooth the rectified AC cycles.

[0057] The PSU controller **250** is configured to monitor the input voltage **254**, input current **253**, output voltage **256** and output current **255** of the SM PSU **251** to ensure matching of the source and input impedances and therefore to ensure maximal power transfer. The source impedance includes all impedances in the power coupling path including the effects of mutual inductance from coupling between the inductive coupler **163** and another inductive coupler presented at the input of the SM PSU **251** while the input impedance of the SM PSU **251** is affected by the impedance of the chargeable power supply **159** and any circuit coupled to the chargeable power supply **159**.

[0058] In addition to impedance matching, the PSU controller **250** is, of course, operable to control the SM PSU **151** such that the values of output voltage **256** and output current **255** are appropriate to achieve correct charging of the chargeable power supply **159**.

[0059] Although FIG. **3** shows the use of a switched mode power supply unit, any suitable form of charging unit **157** may be used in an NFC communicator or NFC communications enabled device embodying the invention, for example a linear control regulator may be used.

[0060] During operation of the NFC communicator shown in FIG. **3**, a power supply for the NFC communicator and possibly any host device may be derived from the chargeable power supply **159** or from the output of the rectifier **154** or the output of the charging circuit **157** or any combination of these. Using power derived by the power deriver **164** directly to power parts of the NFC communicator and/or any host device where possible rather than relying on the chargeable power supply **159** of course avoids draining the chargeable power supply.

[0061] FIG. **4** shows a functional block diagram for assisting in further explaining examples of how NFC communicator or NFC communications enabled device **200** may derive power from another near field RF communicator **400**.

[0062] The power deriving NFC communicator **200** shown in FIG. **4** is as described above with reference to FIGS. **2** and **3** and the same numbering is used where relevant. The power

providing near field RF communicator **400** may be an NFC communicator or NFC communications enabled device similar to that described above in relation to FIGS. **2** and **3** or may comprise another form of near field RF communicator which is capable of communicating via inductive coupling, with the first NFC communicator **200**. The second power providing near field RF communicator may be an RFID transceiver when the power deriving NFC communicator is operating in target mode and could possibly be an RFID tag when the power deriving NFC communicator is operating in initiator mode, if the RFID tag can provide sufficient power.

[0063] As described above, each of the communicators shown in FIG. **4** may or may not have additional functionality, that is the functionality may be provided within or attached to a host device such as those described above. In the latter case, functionalities such as processing power and/or data storage may be shared with the host device.

[0064] The near field RF communicator **400** comprises, in the example shown in FIG. **4**, an NFC communicator having NFC operational components **450** and an inductive coupler **462** shown for simplicity simply as a block. The inductive coupler **462** is a tuned circuit comprising a capacitor and an inductor formed as an antenna and may have any of the configurations discussed above with reference to FIGS. **2** and **3** the exact design of the inductor and inductive coupler depending on the functionality, range and emission standard compliance requirements, plus the environment within which the RF communicator **400** is designed to operate.

[0065] The near field RF communicator **400** has its own power supply (not shown). This power supply may be specific to the near field RF communicator **400** or may form part of a host device and may be, for example a battery or mains supply. This power supply powers the operation of the near field RF communicator **400** when, for example, it acts as an initiator, that is when the NFC operational components **450** generate an RF signal which is fed to the inductive coupler **462**.

[0066] When the coupler **163** of the first NFC communicator **200** is in near field range, the magnetic field (H-field) produced by the RF signal supplied to the inductive coupler **462**, is inductively coupled to the coupler **163** of the first NFC communicator **200** (in FIG. **4** M denotes the mutual inductance between the two inductors of the inductive couplers **462** and **163**). The near field range, that is the range or distance over which inductive coupling arises between the couplers **462** and **163**, will depend on the apparatus involved, in particular the antenna design and position of antenna. Ranges of up to several centimetres are common for NFC communications enabled devices.

[0067] In the manner described above and with reference to FIG. **3**, the power deriver **164** derives power from the inductively coupled RF signal transmitted by the second NFC communicator **400**. Thus, the RF signal inductively coupled to the coupler **163** is converted by the rectifier **154** to a DC signal **160** which is in turn converted via the charging unit **157** into an appropriate charging signal **161** to charge the chargeable power supply **159**.

[0068] In FIG. **4** the NFC communicator **200** receives power and the other near field RF communicator **400** provides or transfers power. However, as will be appreciated, an NFC communicator or NFC communications enabled device embodying the invention may comprise both the ability to receive power and the ability to transfer power and, for example, whether an NFC communicator or NFC communications enabled device is operable to derive or provide power may depend upon the particular circumstances (for example the relative levels of available power) or particular configurations or modes of operation of the two communicators or devices when they come into near field range of one another.

[0069] As described above, power derivation may occur in a variety of ways or modes of operation and may occur during or independently of data communication between the NFC communicators. A number of examples of ways in which power may be derived will now be described. It should however be appreciated that these are only examples.

[0070] In one example, a first, power requiring NFC communicator or NFC communications enabled device such as the first NFC communicator **200** shown in FIG. **4** may derive power from a second, power providing NFC communicator or NFC communications enabled device such as the second near field RF communicator **400** shown in FIG. **4** when data is not being communicated. In this example, the second near field RF communicator or near field RF communications enabled device is operable to generate an un-modulated RF field from which an in-range NFC communicator or NFC communications enabled device embodying the invention may derive power to charge a chargeable power supply. The second, power providing near field RF communicator or near field RF communications enabled device may be operable to generate the un-modulated RF field in response to receipt of a request from the first, power requiring NFC communicator or NFC communications enabled device and/or may be operable to generate the un-modulated RF field automatically at certain times or intervals, for example immediately following communication of data. In this example, the controller (see FIG. **3**) may be configured to activate its power deriver in response to detection of an un-modulated RF field so as, as discussed above with reference to FIG. **3**, to derive a power supply from the un-modulated RF signal supplied by the second near field RF communicator or near field RF communications enabled device. Alternatively the power deriver may be activated when battery power is low by, for example user intervention or following data communication or initially at the start of data communication to ensure sufficient power is stored to carry out the necessary data communication. The derived power may be used directly to power components of the first NFC communicator or NFC communication enabled device (and possibly of any host device) and/or to charge or recharge its chargeable power supply.

[0071] In another example where a first, power requiring NFC communicator or NFC communications enabled device such as the first NFC communicator **200** shown in FIG. **4** may derive power from a second, power providing near field RF communicator or near field RF communications enabled device such as the NFC communicator **400** shown in FIG. **4**, the second near field RF communicator or near field RF communications enabled device may transmit a different RF frequency for power derivation than for data communication and the NFC operational components of the first, power requiring NFC communicator or NFC communications enabled device may comprise a frequency detector and be operable to switch to a power derivation mode in which the power deriver is activated when that different RF frequency is detected. In this example, communication of data occurs independently from communication of power.

[0072] In another example where a first, power requiring NFC communicator or NFC communications enabled device such as the first NFC communicator **200** shown in FIG. **4** may

derive power from a second, power providing near field RF communicator or near field RF communications enabled device such as the second NFC communicator **400** shown in FIG. **4**, communication of power and data may be simultaneous and utilize the same RF field. In such circumstances the power deriver will be activated to enable charging of the chargeable power supply following receipt of an RF field by the first NFC communicator or NFC communication enabled device. Multiple inductive couplers may be included within the first NFC communicator or NFC communications enabled device to maximize transfer of power. Such simultaneous power transfer may also assist to minimize or control power usage within the NFC communicator or NFC communications enabled device. Where power transfer occurs alongside communication of data or directly following such communication, the chargeable power supply within the NFC communicator or NFC communications enabled device may be topped up during or shortly after data communication so as to avoid drain of power supply, particularly of any host device. This may be particularly advantageous where a large amount of data needs to be transferred. For example where as in FIG. **1** the NFC communications enabled devices comprise a mobile telephone and a portable computer such as a laptop, the power supply within the portable computer can be used to replenish the chargeable power supply of the mobile telephone after use, to prevent the mobile telephone battery being drained.

[0073] Where power transfer occurs simultaneously with data communication or directly following data communication, the controller of the first, power requiring NFC communicator or NFC communications enabled device may maximize RF field availability for power transfer either by prolonging data communication with the second, power providing near field RF communicator or near field RF communication enabled device or by instructing the second, power providing near field RF communicator or near field RF communications enabled device to maintain its RF field. Further data communication (in the form of data to be stored and/or instructions) may follow once sufficient power transfer has occurred.

[0074] In another example where a first, power requiring NFC communicator or NFC communications enabled device such as the first NFC communicator **200** shown in FIG. **4** may derive power from a second, power providing near field RF communicator or near field RF communications enabled device such as the second NFC communicator **400** shown in FIG. **4**, power transfer may be brought about or maximized through a change in normal operation of the second, power providing near field RF communicator or near field RF communications enabled device. Thus, where the second, power providing near field RF communicator or near field RF communications enabled device is or comprises an NFC communicator similar to that described in FIG. **3** and is operating in target mode, communication with the first power requiring NFC communicator or NFC communications enabled device may cause the second near field RF communicator or near field RF communications enabled device to switch from target mode to initiator mode, thereby permitting the first NFC communicator or NFC communications enabled device to derive a power supply from a supplied RF signal. Where the second near field RF communicator is operating as an initiator but in accordance with the active protocol, communication with the first power requiring NFC communications enabled device may cause the second near field RF communicator to switch to the passive protocol thereby supplying a constant RF field from which the second near field RF communicator can derive a power supply.

[0075] A power requiring NFC communicator may also request another NFC communicator to change from target to initiator mode (and vice versa) so that the power requiring NFC communicator may derive a power supply from an RF signal generated by the other NFC communicator.

[0076] Also, an NFC communicator or communications enabled device may issue (by modulating an RF signal) a request for power transfer automatically, for example where the relevant power supply is close to exhaustion.

[0077] Thus, there is a number of ways in which power derivation may be controlled, for example, power may be derived, automatically before, during or after data communication or upon user instruction or only upon agreement between the two NFC communicators or NFC communications enabled devices, for example a controller of one of the two communicators or devices may request, if the controller determines that its chargeable power supply needs charging, an opportunity to derive power when in communication with the other NFC communicator or NFC communications enabled device and may activate power derivation in response to acceptance of the request. As another possibility, an NFC communicator or NFC communications enabled device may transmit an RF signal that indicates (for example is un-modulated or is modulated in a certain way) to another NFC communicator or NFC communications enabled device in near field range the availability of a RF signal for use in power derivation.

[0078] As described above, a first, power requiring NFC communicator or NFC communications enabled device may operate in a data communication mode and a power derivation mode. A second, power providing near field RF communicator or near field RF communications enabled device may similarly have a data communication mode and a power supply mode. Depending upon their functionality, either or both of the communicators or communications enabled devices may also have a third mode, a power derivation mode for the second near field RF communicator or near field RF communications enabled device and a power supply mode for the first NFC communicator or NFC communications enabled device. The mode of operation of an NFC communicator or near field RF communicator will be determined by a controller controlling operation of the NFC communicator or near field RF communicator and a mode change may be as a result of user intervention, on completion of any data communication (that is when no other data communication is occurring) on receipt of a request for power transfer from another near field RF communicator or near field RF communications enabled device or on detection of another near field RF communicator or near field RF communications enabled device. In power transfer mode, an near field RF communicator controller may instruct switching functions within the near field RF communicator to change the generated signal properties and/or circuit configuration to facilitate and maximize power transfer. Also, during power transfer, the power providing near field RF communicator may suspend data communication or processing of received data in order to maximize the power being transferred and therefore the replenishment of the chargeable power supply of the other power deriving near field RF communicator or near field RF communications enabled device.

[0079] As described above, an NFC communicator or NFC communications enabled device embodying the invention uses the same coupler or couplers for data communication and power derivation. This need not necessarily be the case and separate couplers may be used for data communication and power derivation by either one or both of two communicators or communications enabled devices.

[0080] FIG. **5** shows a functional block diagram of an NFC communicator **600** having separate couplers for data communication and power derivation. Although not shown in FIG. **5**, the NFC communicator **600** may or may not be associated with at least one of further functionality (that is it may form part of or be attached or associated with a host device) and a user interface.

[0081] The NFC communicator **600** shown in FIG. **5** comprises NFC operational components **101***a* which, like the NFC operational components **101** shown in FIG. **2**, comprise a controller **107***a* for controlling overall operation of the NFC communicator coupled to a data store **108** for storing data to be transmitted from and/or data received by the NFC communicator; a demodulator **114** coupled between the coupler **102** and the controller **107** for demodulating a modulated signal inductively coupled to the coupler from another NFC communicator or NFC communications enabled device in near field range; a signal generator **109** for generating an RF signal, a modulator **110** for modulating an RF signal and a driver for driving a coupler **506** in accordance with the output of the modulator **110**. The coupler **506** comprises an antenna coil or inductor **307** possibly associated, in the manner described above, with one or more capacitors **352**. Although not shown in FIG. **5**, the NFC communicator **600** may also be capable of interference or simulated load modulation in accordance with WO2005/045744. As thus far described, the NFC communicator **600** is similar to that shown in FIG. **3** and functions in similar manner. Like the NFC communicator shown in FIG. **3**, the NFC communicator **600** also has a power deriver **164** (comprising, as shown a rectifier **154** and a charging circuit **157** which may be as described above) coupled to a chargeable power supply **159** which may be provided within or attached to the NFC communicator **600** or provided within or attached to another device associated with or incorporating the NFC communicator. However, in this example, the power deriver **157** is not coupled to the coupler **506** but is coupled to a separate coupler **505** again comprising an antenna in the form of a coil or inductor possibly associated, in the manner described above, with one or more capacitors.

[0082] The controller **107***a* is configured to control both the operation of the NFC operational components **101***a* and the power deriver **164** and in operation will control whether the coupler **506** or the power deriver **164** together with inductive coupler **505** is operable on receipt of an externally supplied RF signal (represented as arrows **500** and **501**). In a preferred embodiment the controller **107***a* is operable to turn off the power deriver **164** until a set time or set series of instructions is received from an near field RF communicator or near field RF communications enabled device. For example on receipt of a modulated RF signal from another near field RF communicator or near field RF communications enabled device (not shown), the received modulated signal may be demodulated by demodulator **114** and interpreted by controller **107***a*. Depending on the data received, the controller **107***a* may then cause a modulated RF signal modulated in accordance with the appropriate operating protocol and data stored in the data store **108** to be transmitted for receipt by the other near field RF communicator or near field RF communications enabled device. Following completion of data communication between the two communicators or communications enabled devices, the controller **107***a* may then turn on the power deriver **164** and inductive coupler **505** or control switches in the paths from the two couplers so that the coupler **506** is disconnected from the NFC communicator **100***a* and the coupler **505** is connected to the power deriver so that an RF field generated by the other near field RF communicator or near field RF communications enabled device can then be used for charging purposes.

[0083] Alternatively both the power deriver **164** and the NFC operational components **101***a* shown in FIG. **5** may be operable at the same time and in response to the same RF field. The couplers may be configured using appropriate filter arrangements so that one is responsive to one frequency and the other to another frequency RF field with the different frequency fields being generated by the same or different NFC communications enabled devices. As in the other examples described above, the NFC communicator **600** shown in FIG. **5** may be a standalone NFC communicator or may be embodied in or associated with a host device. Where the NFC communicator is comprised within a host device, the controller **107***a* may interface with a controller of the host device and optionally the host device controller may control whether the NFC communicator is in a power derivation mode or a data communication mode or both.

[0084] The use of different frequencies for the two couplers **506** and **505** may minimize interference between the inductive couplers. Alternatively or additionally, the antennas **352** and **152** may be physically separated or orientated such that their axes are 90 degrees apart so that they respond to correspondingly orientated H fields.

[0085] A number of applications for NFC communicators and NFC communications enabled devices will now be described with the aid of FIGS. **6** to **9**.

[0086] FIG. **6** shows a simplified view of two NFC communications enabled devices **700** and **800** communicating. In this example, one NFC communications enabled device **700** comprises a mobile telephone having the usual mobile telephone features including a mobile telephone chargeable battery **701** and an NFC communicator **702** having the features described above with reference to any of FIGS. **1** to **5** and, as shown an emergency chargeable power supply or battery **703** which may be attachable to and detachable from the mobile telephone. As shown by the solid double arrows in FIG. **6**, the NFC communicator **702** is coupled to both the mobile telephone chargeable battery **701** and the emergency chargeable power supply or battery **703**.

[0087] In this example, the other NFC communications enabled device **800** comprises an electrical device which may be any suitable electrical device such as a portable electrical device, a desk top electrical device or other item of office or home electrical equipment and so on. For example, the other NFC communications enabled device **800** may be a laptop or notebook computer or a computer peripheral such as a printer or keyboard. In addition to its normal functionality (not illustrated in FIG. **6**) and a power supply **801** which may be a mains or battery power supply, the other NFC communications enabled device **800** has an NFC communicator as described above coupled to derive power from the power supply **801**. In the alternative the RF field from which the power is derived may be supplied by an RF communicator (whether stand-alone or comprised within a host device).

[0088] In the scenario shown in FIG. **6** when, for example, either the mobile telephone functionality or the user determines that the battery is low, then the user (possibly after prompting by the mobile telephone) brings the mobile telephone **700** into near field range of the other NFC communications enabled device **800** and (possibly only after the user has confirmed that the NFC communications enabled devices are in near field range using the key pad **705**), the NFC communicator **702** issues (by modulating an RF signal) a request for power transfer to any NFC communications enabled device in near field range. As another possibility, the NFC communicator **702** may be periodically activated to check for any in-range NFC communications enabled devices and may cause a controller of the mobile telephone to display on the display **704** a message to the user asking whether power transfer is required, whenever there is a power providing NFC communications enabled device in near field range. Then, if the user selects power transfer using the keypad **705**, the mobile telephone controller will instruct the NFC communicator **702** to issue (by modulating an RF signal) a request for power transfer to any NFC communications enabled device in near field range.

[0089] Once communication between the two NFC communications enabled devices has been established, then the NFC communicator **702** may derive power from an RF signal supplied by the NFC communicator **802** in any of the ways described above.

[0090] Alternatively the user may control the operation of NFC communications device **800** such that it is automatically in 'power providing' mode and constantly transmitting an RF signal. When the user brings NFC communications enabled device **700** into the near field range of device **800**, the NFC communicator within mobile phone **700** automatically derives power from the supplied RF signal and uses the derived power to top-up the mobile phone battery or to trickle charge some alternative or additional power supply.

[0091] The NFC communicator **702** may additionally (or alternatively) charge up or trickle charge the emergency battery **703** for later use with the mobile telephone or other compatible device.

[0092] In addition in FIG. **6**, data may be communicated by NFC communication between the NFC communicators of the two devices so that, for example, data (such as for example personal organizer data, music data, video data and so on) may be transferred between the portable computer and mobile telephone.

[0093] FIG. **7** shows another scenario in which the NFC communications enabled mobile telephone **700** is in near field range of two NFC communications enabled devices, a portable computer (laptop or notebook computer) **803** and a printer **900** which will generally, although not shown, be mains powered. In this case, as shown by the dashed lines, the mobile telephone NFC communicator **702** may derive power for itself and/or the mobile telephone as discussed above from near field RF signals transmitted by either the portable computer NFC communicator **804** or the printer NFC communicator **902** or a combination of both. Also although not shown in FIG. **7**, the portable computer NFC communicator **802** may derive power for itself and/or the portable computer from the near field RF signal transmitted by the printer NFC communicator **902**. In addition, data may be communicated by NFC communication between the NFC communicators **702**, **804** and **902** of the three devices so that, for example, data stored by the portable computer or mobile telephone may be supplied to the printer for printing by NFC communication and data (such as for example personal organizer data, music data, video data and so on) may be transferred between the portable computer and mobile telephone.

[0094] FIGS. **8** and **9** illustrate another scenario in the form of an access system in which an NFC communications enabled mobile telephone **700** (or other portable electrical device such as a PDA) is programmed with ticket or access pass software for enabling the user to obtain an electronic ticket, access pass or authorization code such that, when the NFC communicator (not shown in FIG. **8**) of the mobile telephone **700** is in near field communication with an NFC communicator **1001** of an access gate **1000** responsive to that electronic ticket, access pass or authorization code, access will be granted to the user (u) of that mobile telephone.

[0095] FIG. **9** shows a flow chart for explaining the functioning of such an access system.

Thus at S**1**, in response to user input via the keypad, the mobile telephone **700** obtains an electronic ticket, access pass or authorization code for the access gate, as shown in FIG. **9** by the user purchasing a train ticket. As shown at S**2**, the electronic ticket, access pass or authorization code may be obtained by NFC communication with, for example, an automatic ticket dispenser comprising an NFC communications enabled device embodying the invention which may also be used, as described above, to power or charge up the mobile telephone, for example while the users payment is being cleared by communications between the ticket dispenser and a transactions house in the same manner as would be used for a credit transaction. As another possibility, the electronic ticket, access pass or authorization code for the access gate may be purchased over the mobile telecommunications network or by the user from a ticket kiosk in which case the user will need to enter the electronic ticket, access pass or authorization code provided by the human ticket vendor into the mobile telephone using its keypad.

Once the electronic ticket, access pass or authorization code is stored in the mobile telephone at S**3** the mobile telephone **700** is programmed to function as the electronic ticket, access pass or authorization code provider.

The user then brings at S**5** the mobile telephone into near field communication range of the NFC communicator **1001** of the access gate **1000** and, at S**7**, the NFC communicator of the mobile telephone communicates with the NFC communicator **1001** of the access gate to transfer, data representing the electronic ticket, access pass or authorization code. Such data may be encrypted or provided in protected format. At S**8**, the NFC communicator **1001** of the access gate **1000** receives the transferred data and it or a controller of the access gate checks the authenticity and correctness of the transferred data and, if it is authentic and correct, allows the user of the mobile telephone access through the access gate **1000**.

[0096] It will of course be appreciated that the power deriver shown in FIG. **3** is only one possible example of a suitable power deriver and other circuit configurations may be advantageous in order to further maximize power transfer efficiencies.

[0097] The chargeable power supply may be the sole power supply of the NFC communications enabled device or alternatively may be one of a number of power supplies comprised within the NFC communications enabled device. For example, the NFC enabled device may have a separate power supply and the chargeable power supply may be used simply as a back-up in the event that power supply fails. In this case,

the chargeable power supply may be incorporated within the NFC communicator or within the host device where the NFC communications enabled device has functionality beyond the NFC communicator functionality or may be provided as a separate power supply device couplable to the NFC communications enabled device. As another possibility or additionally, where the NFC communications enabled device has functionality beyond the NFC communicator functionality, the NFC communicator and host device may have separate power supplies that may be chargeable by the power deriver either directly or from a charged chargeable power supply itself charged directly by the power deriver. The power deriver may also be coupled and configured to trickle-charge or replenish a second power storage device. For example an available RF field may be used to re-charge a lap-top battery or mobile telephone battery. Additional circuitry may be included to selectively feed alternative DC and AC power sources to the input of the charging circuit or to the input of the rectifier, respectively, for example. A mains power-adapter is an example alternative DC power source.

[0098] In examples given above, both the power requirer and the power provider are NFC communicators or NFC communications enabled devices. In examples where the power provider has to be capable of initiating near field communication but does not have to be capable of responding to initiation of near field communication by the power requirer, then the power provider may be an initiating near field communicator such as an RFID transceiver or reader. In examples where the power provider has to be capable of responding to initiation of near field communication by the power requirer but does not have to be capable of initiating near field communication, then the power provider may be a responding near field communicator such as an RFID transponder or tag, if sufficient power can be provided. An NFC communicator may operate in accordance with ISO/IEC 18092 and/or ISO/IEC 21481 while an RFID reader or RFID tag may operate fully or partially in accordance with RFID ISO/IEC 14443A or ISO/IEC 15693.

[0099] It is to be understood that any feature described in relation to any one embodiment may be used alone, or in combination with other features described, and may also be used in combination with one or more features of any other of the embodiments, or any combination of any other of the embodiments. Furthermore, equivalents and modifications not described above may also be employed without departing from the scope of the invention, which is defined in the accompanying claims.

1. An NFC communicator, comprising:
- a data store operable to store data;
- a coupler operable to couple inductively with the magnetic field of a radio frequency signal;
- a signal generator operable to supply a radio frequency signal to the coupler;
- a modulator operable to modulate a radio frequency signal in accordance with data;
- a demodulator operable to extract data from a modulated radio frequency signal inductively coupled to the coupler;
- a controller operable to enable the NFC communicator both to initiate near field radio frequency communication with another near field RF communicator and to respond to near field radio frequency communication initiated by another near field RF communicator; and
- a power deriver operable to derive power from a radio frequency signal inductively coupled to the coupler to charge a chargeable power supply.

2. An NFC communicator according to claim **1**, wherein the power deriver comprises one of a switch-mode power supply unit and a linear regulator.

3. An NFC communicator according to claim **1**, wherein the power deriver comprises a rectifier and one of a switch-mode power supply unit and a linear regulator.

4. An NFC communicator according to claim **1**, wherein the controller is operable to enable the device to operate in a power deriving mode in which the power deriver is active and a data communication mode in which the power deriver is inactive.

5. An NFC communicator according to claim **1**, wherein the controller is operable to enable the device to operate also in a power supply mode in which the power deriver is inactive and the signal generator is operable to generate a signal from which another NFC communicator can derive power.

6. An NFC communicator according to claim **1**, wherein the controller is operable to change the mode of operation of another near field RF communicator such that an RF signal supplied by the other near field RF communicator couples inductively with the coupler to enable the power deriver to charge a chargeable power supply.

7. An NFC communicator according to claim **1**, wherein the power deriver is operable to derive power:
- following communication of data and/or instructions with another near field RF communicator;
- following receipt of instructions from an end user;
- when the or at least one of plural chargeable power supplies is exhausted; or
- automatically when the NFC communicator device is within the magnetic field supplied by another near field RF communicator.

8. An NFC communicator according to claim **1**, wherein the inductive coupler comprises multiple inductive couplers.

9. An NFC communicator according to claim **1**, wherein the plurality of inductive couplers are provided and the NFC communicator is operable to use different inductive couplers for each of power derivation and data communication.

10. An NFC communicator according to claim **8**, wherein different inductors or inductive couplers are responsive to different frequency signals.

11. An NFC communicator according to claim **1**, further comprising a frequency detector operable to detect the frequency of RF signals coupled to the coupler.

12. An NFC communicator according to claim **1**, wherein the NFC communicator is operable under ISO/IEC 18092 and/or ISO/IEC 21481.

13. An NFC communicator according to claim **1**, wherein the NFC communicator is operable to communicate with at least one of: another NFC communicator, an RF transceiver; an RF transponder; an RF transceiver fully or partially compliant with ISO/IEC 14443 or ISO/IEC 15693; and an RF transponder fully or partially compliant with ISO/IEC 14443 or ISO/IEC 15693.

14. An NFC communicator according to claim **1**, wherein the NFC communicator is provided within: a housing attachable to another device; a housing portion, such as fascia of another device; an access card; or a housing shaped or configured to look like a smart card.

15. An NFC communicator according to claim **1** and a chargeable power supply.

16. An NFC communicator according to claim **15**, wherein the chargeable power supply comprises at least one of: a chargeable power supply comprised within or couplable to the NFC communicator; a chargeable power supply operable to power at least one of the NFC communicator and functionality other than that of the NFC communicator; a spare or emergency chargeable power supply; and plural chargeable power supplies.

17. An electrical device comprising an NFC communicator according to claim **1**.

18. An electrical device comprising an NFC communicator according to claim **1** and a chargeable power supply.

19. An electrical device according to claim **18**, wherein the chargeable power supply comprises a power supply for at least one of the NFC communicator and the electrical device.

20. An electrical device according to claim **17**, wherein the NFC communicator is integrated within or dispersed within the functionality of the electrical device.

21. An electrical device according to claim **17**, wherein the NFC communicator comprises at least one integrated circuit within the electrical device.

22. An electrical device according to claim **17**, wherein the power supply is operable: to power at least one of the NFC communicator; functionality of the electrical device; other functionality; and a chargeable spare or emergency power supply.

23. An electrical device according to claim **17**, wherein the device comprises at least one of a mobile telephone, a portable computing device such as a personal digital assistant, notebook, or lap-top, a personal or desk top computer, a computer peripheral such as a printer, or other electrical device such as a portable audio and/or video player.

24. An electrical device according to claim **17**, further comprising a user interface for enabling a user to input instructions to control at least one of communication of data by the NFC communicator or derivation of power by the power deriver.

25. A system comprising at least one NFC communicator in accordance with claim **1** and at least one other near field RF communicator from which the at least one NFC communicator or device may derive power, wherein the at least one other near field RF communicator is

operable to inductively couple an RF signal to the NFC communicator.

26. An NFC communicator, comprising:

data storing means for storing data;

coupling means for coupling inductively with the magnetic field of a radio frequency signal;

signal generating means for supplying a radio frequency signal to the coupling means;

modulating means for modulating a radio frequency signal in accordance with data;

demodulating means for extracting data from a modulated radio frequency signal inductively coupled to the coupling means;

controlling means for enabling the NFC communicator both to initiate near field radio frequency communication with another near field RF communicator and to respond to near field radio frequency communication initiated by another near field RF communicator; and

power deriving means for deriving power from a radio frequency signal inductively coupled to the coupling means to charge a chargeable power supply means.

27. A chargeable power supply comprising an NFC communicator in accordance with claim **1**.

28. A system comprising at least one NFC communicator in accordance with claim **1** and at least one other near field RF communicator from which the at least one NFC communicator or device may derive power, wherein the at least one other near field RF communicator is selected from the group consisting of: (i) NFC communicators compatible with at least one of ISO/IEC 18092 and ISO/IEC 21481 and

(ii) RFID readers compatible with at least one of ISO/IEC 14443 and ISO/IEC 15693.

29. A system comprising first and second NFC communicators each in accordance with claim **1**, wherein the first NFC communicator may derive power from the second NFC communicator.

* * * * *