UNITED STATES PATENT AND TRADEMARK OFFICE

BEFORE THE PATENT TRIAL AND APPEAL BOARD

SAMSUNG ELECTRONICS CO., LTD.
Petitioner

v.

MOJO MOBILITY INC.
Patent Owner

Patent No. 11,462,942

PETITION FOR *INTER PARTES* REVIEW
OF U.S. PATENT NO. 11,462,942

TABLE OF CONTENTS

I. INTRODUCTION 1

II. MANDATORY NOTICES 1

III. PAYMENT OF FEES 2

IV. GROUNDS FOR STANDING 2

V. PRECISE RELIEF REQUESTED AND GROUNDS 2

VI. LEVEL OF ORDINARY SKILL 4

VII. THE '942 PATENT 4

VIII. CLAIM CONSTRUCTION 5

IX. DETAILED EXPLANATION OF GROUNDS 5

A. Ground 1: Claims 6 and 9 are obvious over *Okada*, *Odendaal*, and *Kook* 5

1. Claim 1 5

2. Claim 6 60

3. Claim 9 66

B. Ground 2: Claim 10 is obvious over *Okada*, *Odendaal*, *Kook, Symons*, *Shima*, and *Hui-027* 69

1. Claim 10 69

C. Ground 3: Claim 13 is unpatentable under § 103(a) as being obvious over *Okada*, *Odendaal*, *Kook*, and *Symons* 83

1. Claim 13 83

X. DISCRETIONARY DENIAL IS NOT APPROPRIATE 86

XI. CONCLUSION 91

LIST OF EXHIBITS

Ex.1001	U.S. Patent No. 11,462,942
Ex.1002	Declaration of R. Jacob Baker, Ph.D., P.E.
Ex.1003	Curriculum Vitae of R. Jacob Baker, Ph.D., P.E.
Ex.1004	Prosecution History of U.S. Patent No. 11,462,942
Ex.1005	Translation of Japanese Patent Application Publication No. 2006-141170A ("*Okada*")[1]
Ex.1006	U.S. Patent No. 6,912,137 ("*Berghegger*")
Ex.1007	U.S. Patent Application Publication No. 2006/0145660A1 ("*Black*")
Ex.1008	U.S. Patent No. 6,960,968 ("*Odendaal*")
Ex.1009	U.S. Patent No. 6,489,745 ("*Koreis*")
Ex.1010	U.S. Patent No. 6,366,817 ("*Kung*")
Ex.1011	Physics, Henry Semat et al., Rinehart & Co., Inc., 1958, Chapters 29-32 ("*Semat*")
Ex.1012	U.S. Patent No. 5,702,431 ("*Wang*")
Ex.1013	International Patent Application Publication No. WO1996040367 ("*WangII*")
Ex.1014	Handbook of Radio and Wireless Technology, Stan Gibilisco, McGraw-Hill, 1999 ("*Gibilisco*")
Ex.1015	U.S. Patent No. 4,942,352 ("*Sano*")

[1] Exhibit 1005 includes the original Japanese version and a certified English translation. Citations to *Okada* are to the English translation.

Ex.1016	Fundamentals of Electric Circuits, 2d., Charles Alexander et al., McGraw-Hill, 2004 ("*Alexander*")
Ex.1017	International Patent Application Publication No. WO1994/18683 ("*Koehler*")
Ex.1018	Mojo Mobility's Infringement Chart for U.S. Patent No. 11,462,942 (Ex. 5) accompanying Mojo Mobility's Infringement Contentions in *Mojo Mobility Inc. v. Samsung Elecs. Co., Ltd.*, No. 2:22-cv-00398 (E.D. Tx.) (February 28, 2023)
Ex.1019	U.S. Patent Application Publication No. 2005/0068019 ("*Nakamura*")
Ex.1020	U.S. Patent Application Publication No. 2007/0109708 ("*Hussman*")
Ex.1021	U.S. Patent Application Publication No. 2003/0210106 ("*Cheng*")
Ex.1022	Mojo Mobility's Infringement Contentions in *Mojo Mobility Inc. v. Samsung Elecs. Co., Ltd.*, No. 2:22-cv-00398 (E.D. Tx.) (February 28, 2023)
Ex.1023	U.S. Patent Application Publication No. 2004/0201988 ("*Allen*")
Ex.1024	U.S. Patent No. 7,378,817 ("*Calhoon-817*")
Ex.1025	International Patent Application Publication No. WO2003/096361 ("*Cheng*")
Ex.1026	International Patent Application Publication No. WO2004/038888 ("*ChengII*")
Ex.1027	Spiral Inductor Design for Quality Factor, Sang-Gug Lee et al., Journal of Semiconductor Technology and Science, Vol. 2. No. 1, March 2002 ("*Lee*")
Ex.1028	U.S. Patent Application Publication No. 2001/0055207 ("*Barbeau*")
Ex.1029	AN710 Antenna Circuit Design for RFID Applications
Ex.1030	U.S. Patent No. 6,606,247 ("*Credelle*")

Ex.1031	RESERVED
Ex.1032	U.S. Patent No. 5,808,587 ("*Shima*")
Ex.1033	RESERVED
Ex.1034	RESERVED
Ex.1035	RESERVED
Ex.1036	International Patent Application Publication No. WO2003/105308A1 ("*Hui*")
Ex.1037	U.S. Patent No. 5,780,992 ("*Beard-1*")
Ex.1038	RESERVED
Ex.1039	RESERVED
Ex.1040	RESERVED
Ex.1041	RESERVED
Ex.1042	RESERVED
Ex.1043	RESERVED
Ex.1044	U.S. Patent Application Publication No. 2007/0145830A1 ("*Lee-II*")
Ex.1045	U.S. Patent Application Publication No. 2007/0267718A1 ("*Lee-Via*")
Ex.1046	RESERVED
Ex.1047	U.S. Patent Application Publication No. 2006/0202665 ("*Hsu*")
Ex.1048	International Patent Application Publication No. WO2009155000A2 ("*Lin*")
Ex.1049	U.S. Patent Application Publication No. 2008/0067874 ("*Tseng*")
Ex.1050	U.S. Patent No. 9,356,473 ("*Ghovanloo*")

Ex.1051	Memorandum from Director Vidal (June 21, 2022)
Ex.1052	Federal Court Management Statistics (December 2022)
Ex.1053	Docket Control Order of March 28, 2023, *Mojo Mobility Inc. v. Samsung Elecs. Co., Ltd.*, No. 2:22-cv-00398 (E.D. Tex.)
Ex.1054	RESERVED
Ex.1055	RESERVED
Ex.1056	RESERVED
Ex.1057	RESERVED
Ex.1058	RESERVED
Ex.1059	U.S. Patent Application Publication No. 2009/0261778 ("*Kook*")
Ex.1060	RESERVED
Ex.1061	International Patent Application Publication No. WO2002/37641 ("*Cho*")
Ex.1062	U.S. Patent Application Publication No. 2007/0022058 ("*Labrou*")
Ex.1063	RESERVED
Ex.1064	RESERVED
Ex.1065	RESERVED
Ex.1066	RESERVED
Ex.1067	RESERVED
Ex.1068	U.S. Patent Application Publication No. 2003/0095027 ("*Hui-027*")
Ex.1069	RESERVED
Ex.1070	U.S. Patent Application Publication No. 2008/0272889 ("*Symons*")
Ex.1071	RESERVED

Ex.1072	RESERVED
Ex.1073	RESERVED
Ex.1074	RESERVED
Ex.1075	Watson, J., Mastering Electronics, Third Ed., McGraw-Hill, Inc. (1990) ("*Watson*")
Ex.1076	Sedra, A., *et al.*, Microelectronic Circuits, Fourth Ed., Oxford University Press (1998) ("*Sedra*")
Ex.1077	GB Patent Application Publication No. 2202414 ("*Logan*")
Ex.1078	U.S. Patent No. 7,226,442 ("*Sheppard*")
Ex.1079	U.S. Patent No. 6,631,296 ("*Parramon*")

I. INTRODUCTION

Samsung Electronics Co., Ltd. ("Petitioner") requests *inter partes* review of claims 6, 9-10, and 13 ("challenged claims") of U.S. Patent No. 11,462,942 ("the '942 patent") (Ex.1001) assigned to Mojo Mobility Inc. ("PO"). For the reasons below, the challenged claims should be found unpatentable and canceled.

II. MANDATORY NOTICES

Real Parties-in-Interest: Petitioner identifies the following as the real parties-in-interest: Samsung Electronics Co., Ltd., and Samsung Electronics America, Inc.

Related Matter: The '942 patent is at issue in the following matter(s):

- *Mojo Mobility Inc. v. Samsung Electronics Co., Ltd.*, No. 2-22-cv-00398 (E.D. Tex.) (asserting the '942 patent and also U.S. Patent Nos. 9,577,440, 11,292,349, 11,201,500, 7,948,208, 11,342,777, and 11,316,371) ("Texas Litigation").
- Petitioner is filing concurrently herewith petitions for *inter partes* review challenging other claims of the '942 patent and petitions challenging parent U.S. Patent No. 11,316,371 (the '371 patent).

The '942 patent originates from U.S. Patent Application No. 17/728,502, filed on April 25, 2022, which is a continuation or continuation-in-part of a sequence of

applications dated as early as Jan. 30, 2007. (Ex.1001, Cover.) The '942 patent also lists multiple provisional applications dated as early as Jan. 31, 2006. (*Id.*)

Counsel and Service Information: Lead counsel: Joseph E. Palys (Reg. No. 46,508), and Backup counsel are (1) Naveen Modi (Reg. No. 46,224), (2) Howard Herr (*pro hac vice* admission to be requested). Service information is Paul Hastings LLP, 2050 M St., Washington, D.C., 20036, Tel.: 202.551.1700, Fax: 202.551.1705, email: PH-Samsung-MojoMobility-IPR@paulhastings.com. Petitioner consents to electronic service.

III. PAYMENT OF FEES

The PTO is authorized to charge any fees due during this proceeding to Deposit Account No. 50-2613.

IV. GROUNDS FOR STANDING

Petitioner certifies that the '942 patent is available for review and Petitioner is not barred or estopped from requesting review on the grounds identified herein.

V. PRECISE RELIEF REQUESTED AND GROUNDS

The challenged claims should be canceled as unpatentable based on the following grounds:

Ground 1: Claims 6 and 9 are unpatentable under 35 U.S.C. § 103(a) as obvious over *Okada* in view of *Odendaal* and *Kook*;

Ground 2: Claim 10 is unpatentable under § 103(a) as obvious over *Okada* in view of *Odendaal*, *Kook, Symons*, *Shima*, and *Hui-027*; and

Ground 3: Claim 13 is unpatentable under § 103(a) as obvious over *Okada* in view of *Odendaal*, *Kook*, and *Symons*.

In the Texas Litigation, PO identified the following priority dates for the challenged claims (and possibly up to three months earlier):

(a) 7/30/2007: claims 1, 9, and 13;

(b) 12/12/2007: claims 6 and 10.

(Ex.1022, 6-8.) Without conceding such dates are appropriate, Petitioner assumes for this proceeding those are the effective date(s) for the challenged claims. The asserted prior art herein qualifies as prior art as follows:[2]

Okada (published: 6/1/2006)	§102(b)
Odendaal (filed: 6/26/2002; issued: 11/1/2005)	§§102(b), 102(e)
Shima (filed: 03/21/1997; published: 9/15/1998)	
Hui-027 (filed 10/28/2002; published 5/22/2003)	
Kook (filed: 10/25/2006; published: 10/22/2009)	§102(e)
Symons (filed: 1/19/2006; published: 11/6/2008)	

[2] *See infra* §X.

VI. LEVEL OF ORDINARY SKILL

A person of ordinary skill in the art as of the claimed priority date of the '942 patent ("POSITA") would have had at least a master's degree in electrical engineering, or a similar discipline, and two or more years of experience with wireless charging systems, including, for example, inductive power transfer systems. (Ex.1002, ¶¶20-21.)[3] More education can supplement practical experience and vice versa. (*Id.*)

VII. THE '942 PATENT

During prosecution, the claims went straight to allowance because allegedly "the prior art fails to teach or suggest" features associated with the claimed "communication and control circuit" and "regulate" features (*id.*, 562-573). However, those features, and others, recited in the challenged claims relate to a compilation of conventional components/features that were disclosed/suggested by the prior art combinations herein. *See In re Gorman*, 933 F.2d 982, 986 (Fed. Cir. 1991). (*Infra* §IX; Ex.1002, ¶¶22-67, 69-250; Exhibits 1005-1017, 1019-1021,

[3] Petitioner submits the declaration of R. Jacob Baker, Ph.D., P.E. (Ex.1002), an expert in the field of the '942 patent. (Ex.1002, ¶¶3-13; Ex.1003.)

1023-1030, 1032, 1036-1037, 1044-1045, 1047-1050, 1059, 1061-1062, 1068, 1070, 1075-1079.)

VIII. CLAIM CONSTRUCTION

The Board only construes the claims when necessary to resolve the underlying controversy. *Toyota Motor Corp. v. Cellport Systems, Inc.*, IPR2015-00633, Paper No. 11 at 16 (Aug. 14, 2015). For purposes of this proceeding, Petitioner believes that no special constructions are necessary to assess whether the challenged claims are unpatentable over the asserted prior art.[4] (Ex.1002, ¶68.)

IX. DETAILED EXPLANATION OF GROUNDS

A. Ground 1: Claims 6 and 9 are obvious over *Okada*, *Odendaal*, and *Kook*

Claims 6 and 9 depend from claim 1.

1. Claim 1

a) A system for providing power inductively to a portable device comprising a battery and an inductive

[4] Petitioner reserves all rights to raise claim construction and other arguments, including challenges under §112, in district court as relevant to those proceedings. *See, e.g.*, *Target Corp. v. Proxicom Wireless, LLC*, IPR2020-00904, Paper 11 at 11–13 (Nov. 10, 2020). A comparison of the claims to any accused products in litigation may raise controversies that are not presented here given the similarities between the references and the patent.

receiver unit including a receiver coil and a receiver circuit, the system comprising:

To the extent limiting, *Okada* (including as modified below) discloses this limitation. (Ex.1002, ¶¶70-84, 103-112; §§IX.A.1(b)-(m).) *Okada* discloses a "**system**" for inductively powering/charging portable devices, *e.g.*, mobile phones. (Ex.1005, Abstract, ¶¶0001, 0047.) FIG. 1 (annotated-below) shows power supply system 1 (blue) including PC2, PDA3 (green) ("**portable device**"), and cradle 4 (red) ("**system**"). (Ex.1005, ¶¶0034-0036.) (Ex. 1002, ¶104.)

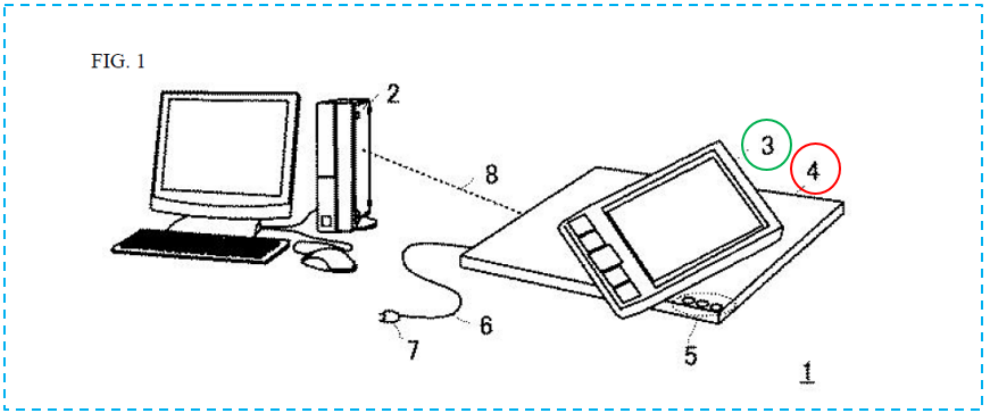

"[M]agnetic coupling" occurs between cradle coil and PDA3 coil, which "induces voltage at both ends of the coil in the PDA" to "suppl[y] power to the PDA." (*Id.*, ¶0035.) (Ex.1002, ¶105.)

Cradle 4 includes a **power transmitting module 10** ("PTM10") (also a "**system**" (alone or collectively with cradle 4)), and PDA3 includes a **power receiving module 40** ("PRM40"). (*Id.*, ¶¶0035-0037, 0038-0058, FIG. 8, 0110-0111; Ex.1002, ¶106.)

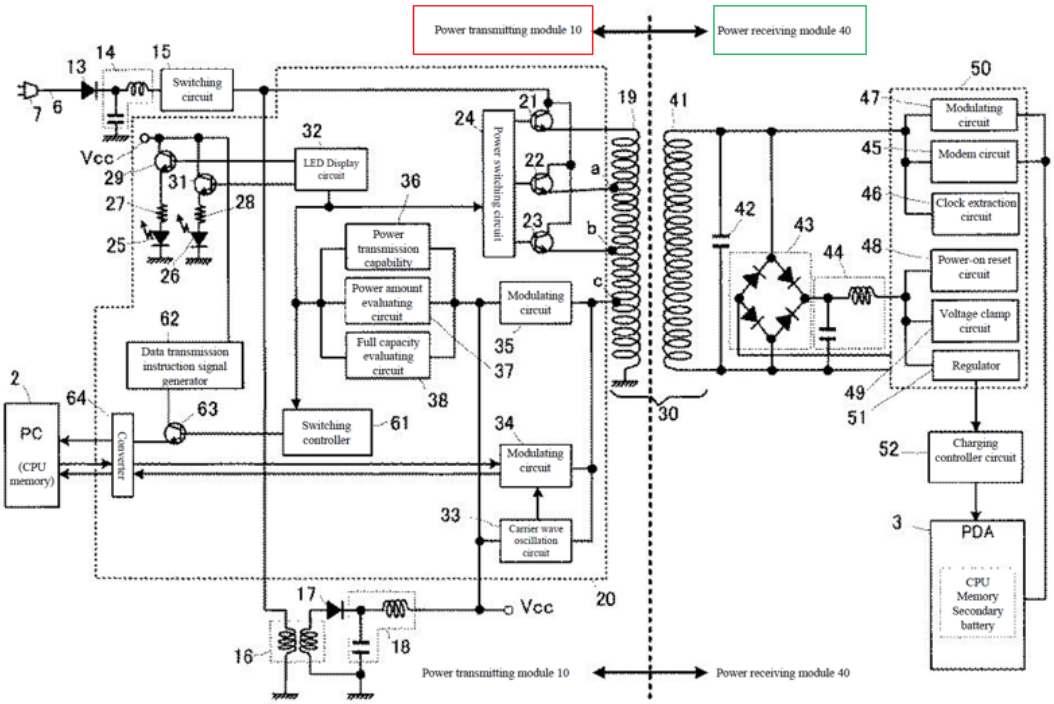

Circuits 13-14 convert received power to a DC signal. (Ex.1005, ¶¶0038, 0049.) Switching circuit 15 generates a switching pulse signal using the DC signal (*id.*), which is converted to a signal (V_{CC}) powering PTM10 components (via circuits 16-18). (*Id.*, ¶0039.) The pulse signal is also supplied to primary coil 19 via switches 21/22/23. (*Id.*, ¶¶0040, 0049-0051.) Power switching circuit 24 selects a switch 21/22/23 to allow the pulse signal to traverse turns of coil 19, enabling the system to select/adjust the power level transmitted to PRM40 (PDA3). (*Id.*, ¶¶0040, 0051, 0057, 0069-0073.) The transmitted power level may be determined based on the device's "power consumption information" provided by PRM40 to PTM10. (*Id.*, ¶¶0057, 0063-0064, 0069-0073; Ex.1002, ¶¶107-108.)

Okada discloses various configurations of such a "system" providing similar

functionalities associated with PTM10 and PRM40, in connection with, *e.g.,* FIGS. 2, 7-17. (Ex.1005, ¶¶0009-0032, ¶¶0094-0096 (PTM10 and PRM40 including multiple coils), 0097-0154). Applications of these features are described with respect to other exemplary "system[s]." (Ex.1005, ¶0107, FIG. 9 (below), ¶¶0116-0118, FIG. 10, ¶0119, FIGS. 11(a)-(b) (below), ¶¶0120-0122, FIGS. 12(a)-(b) (below), ¶¶0123-0126, FIGS. 13(a)-(b) (below), ¶¶0127-0132; Ex.1002, ¶109.)

FIG. 9

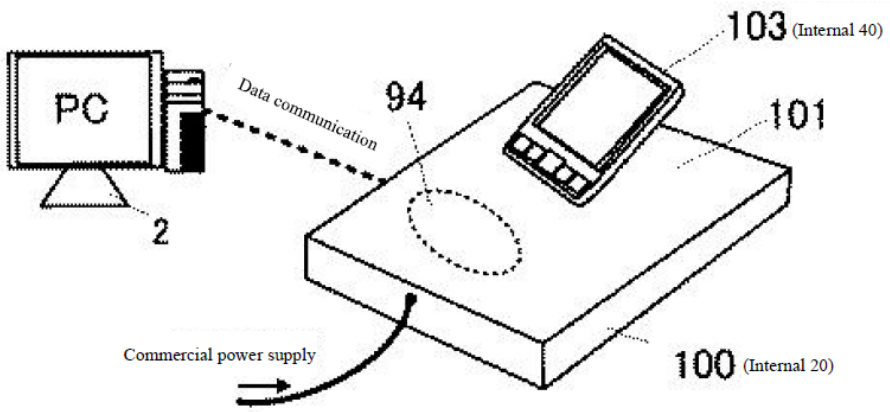

FIG. 10

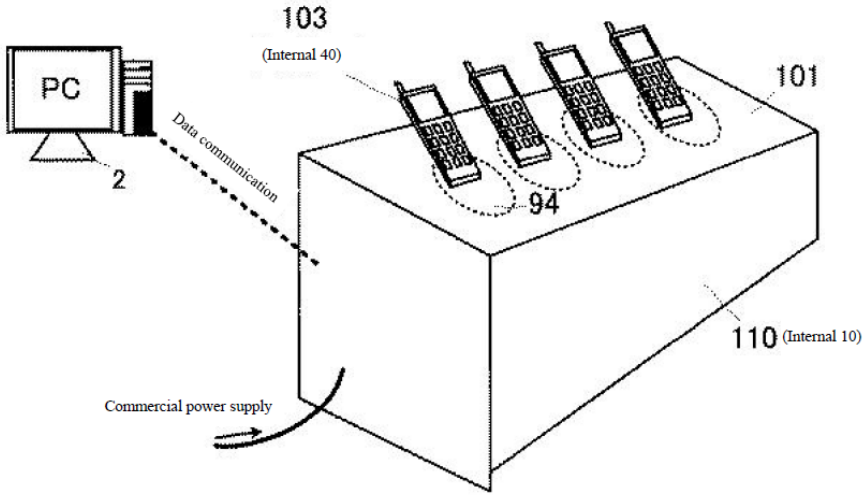

FIG. 11

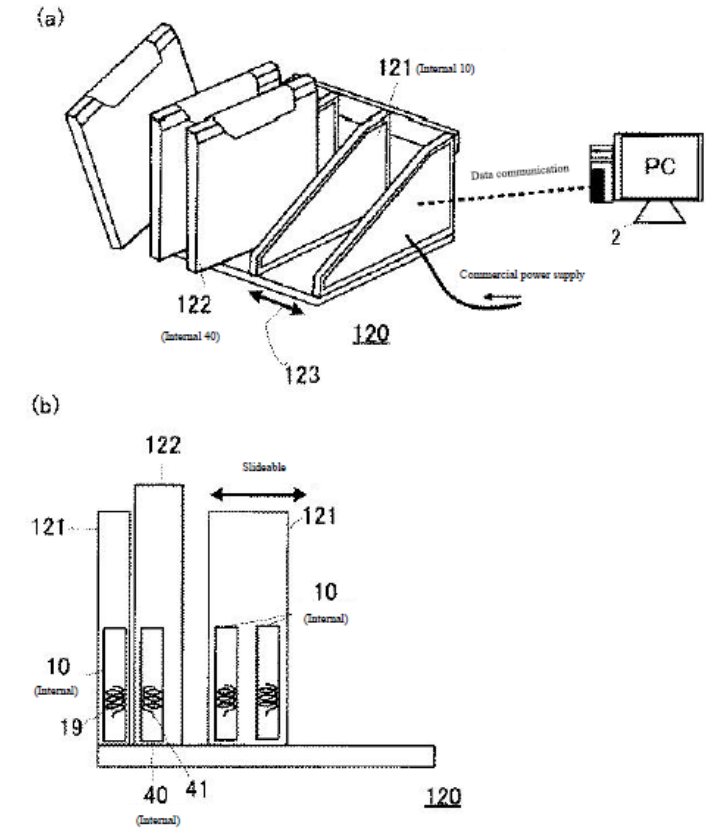
(a)
121 (Internal 10)
Data communication
PC
2
Commercial power supply
122
(Internal 40)
120
123
(b)
122
Slideable
121
121
10
(Internal)
10
(Internal)
19
40
41
(Internal)
120

FIG. 12

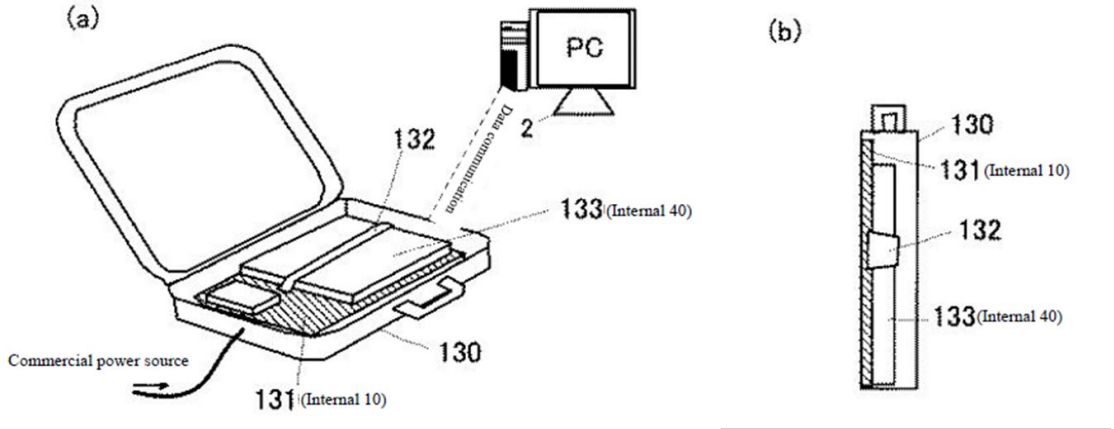
(a)
PC
2
Data communication
132
133 (Internal 40)
130
Commercial power source
131 (Internal 10)
(b)
130
131 (Internal 10)
132
133 (Internal 40)

FIG. 13

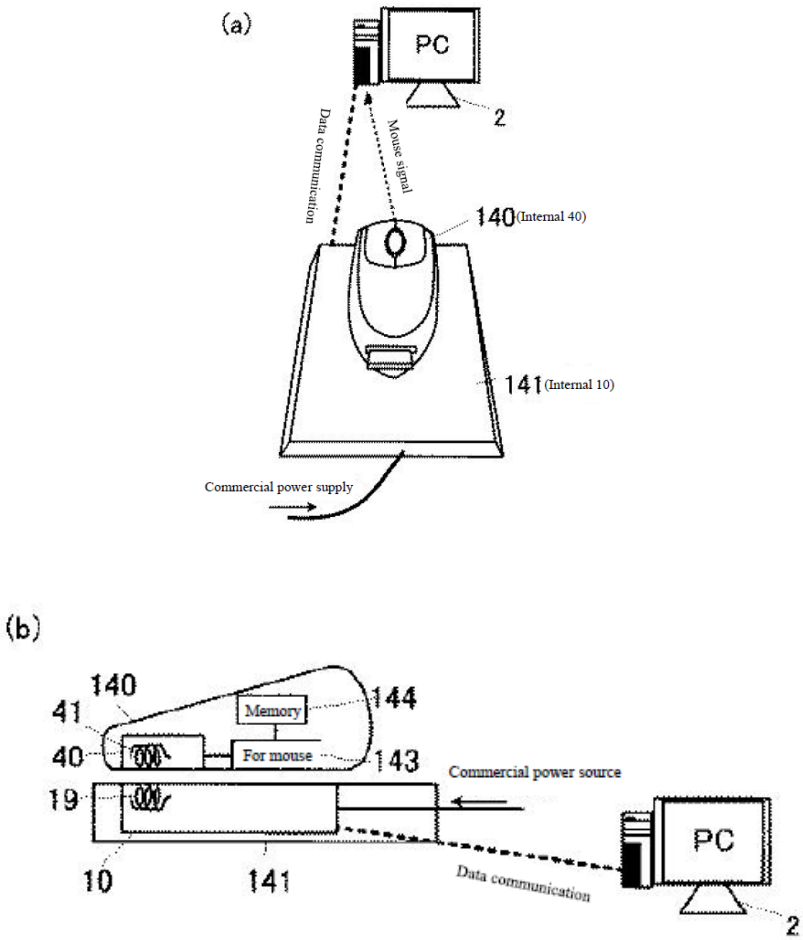

The "power supply operations carried out between [PTM10 and PRM40]" (FIG. 3 (below)) are also applicable to such configurations. (Ex.1005, FIG. 3, ¶0059; ¶¶0060-0090; 0094-0115.) Thus, *Okada*'s configurations (including as modified below) including features recited in the below-explained claimed limitations is a "**system**" (*e.g.*, FIGS 1, 2, 7, 9-13). (Ex.1005, ¶0030; §§IX.A.1(b)-(m); Ex.1002, ¶110.)

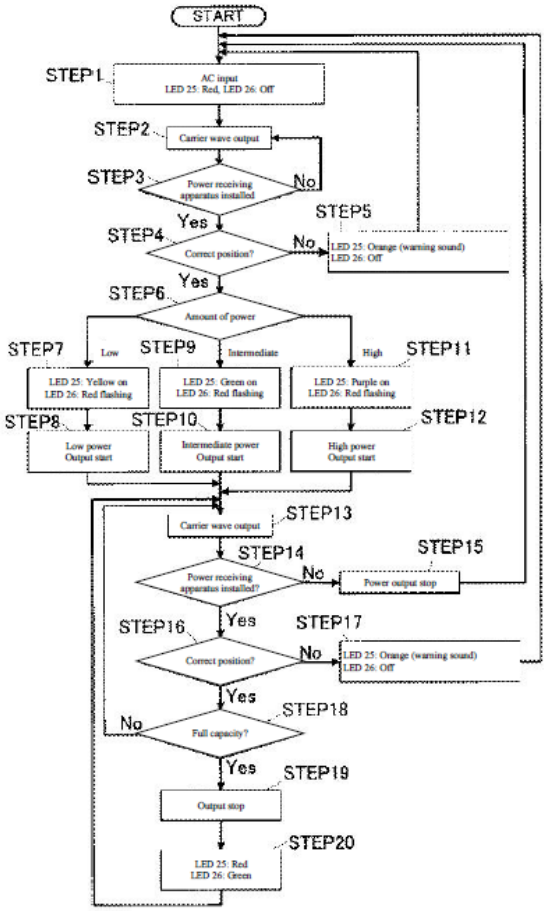

PDA3 includes a "secondary battery" and PRM40 ("**portable device**" with "**a battery and an inductive receiver unit**"). (Ex.1005, ¶¶0012, 0015, 0037, FIG. 14, ¶¶0134-0136, FIG. 15, ¶¶0138-0140, FIG. 16, ¶¶0142-0144, claim 4, FIG. 2 (**purple** below); Ex.1002, ¶111.)

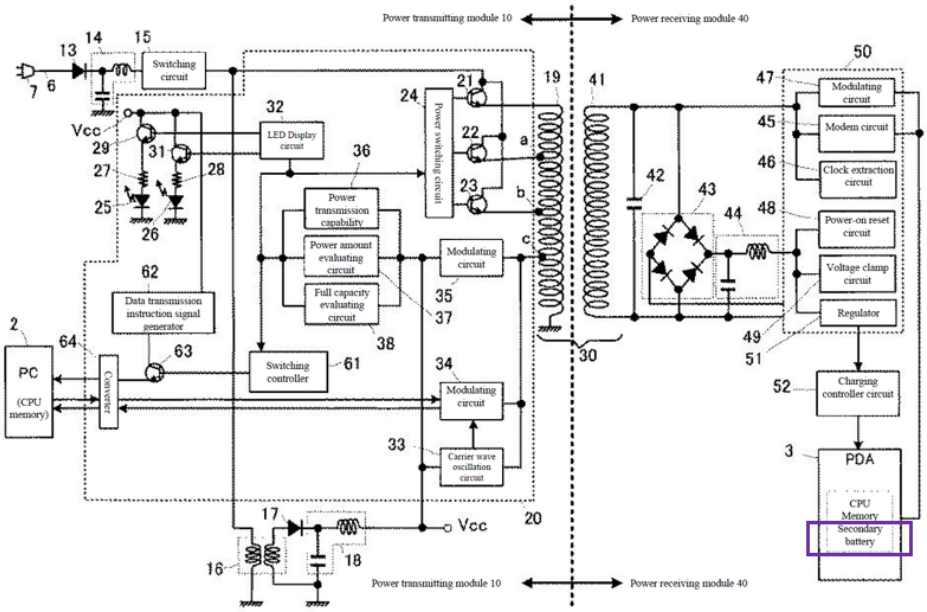

PRM40 exemplifies an "**inductive receiver unit**" including coil 41 (**orange**) ("**receiver coil**") (Ex.1005, ¶0040), and a "**receiver circuit**" (e.g., **red** below), including at least rectifier 43 (**blue**), clock and modulating circuits 46-47, and may further include one or more other PRM40 components (other than the **battery**) (e.g., circuits 42, 44-45, 48-49, 51, and/or 52). (Ex.1005, ¶0047; Ex.1002, ¶112).[5]

[5] The annotated figures provided herein are exemplary visual aids and are not intended to be limiting.

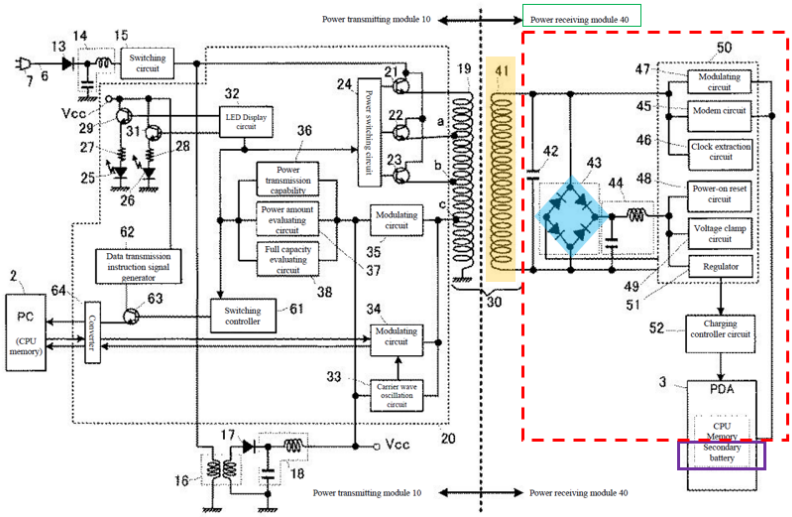

b) a first primary coil that is substantially planar and substantially parallel to a charging surface of the system for providing power inductively to the portable device;

Okada in view of *Odendaal* discloses/suggests this limitation. (Ex.1002, ¶¶113-131.)

Okada's "**system**" includes "**a first primary coil**" (19). (§IX.A.1(a); *e.g.*, Ex.1005, FIG. 2 (**blue** below), ¶¶0040, 0050, FIG. 7, 0095-0107, FIGS. 9-10, ¶¶0116-119, FIGS. 11(a)-(b)—12(a)-12(b), ¶0121-0125, FIG. 13, ¶0132; Ex.1002, ¶114.)

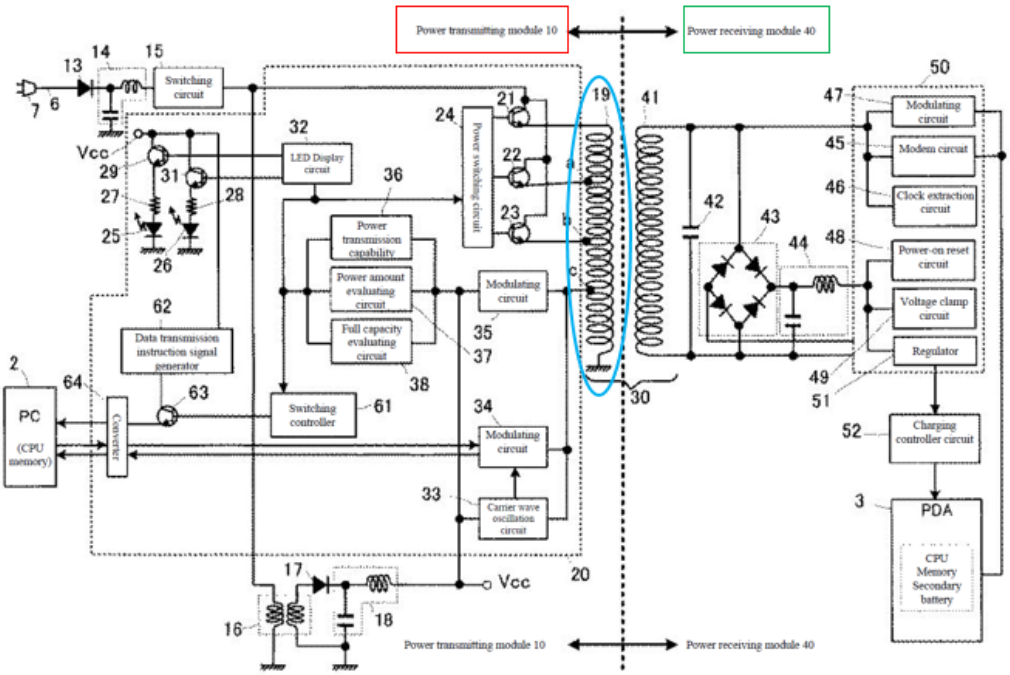

Coil 19 is used for "**providing power inductively to the portable device**." (Ex.1002, ¶115.) Switches 21/22/23 are selected to provide selected power level(s) to PRM40 of "**portable device**" via coils 19/41 through induction. (§IX.A.1(a); Ex.1005, FIG. 3, ¶¶0035, 0040, 0051, 0057, 0069-0073.)

Figures 11(b) and 13(b) exemplify "**primary coil**" 19 positioned "**substantially parallel to a charging surface of the system**" (**blue** parallel (**red**) to coil 19 (**orange**) below). (Ex.1005, FIGS. 11(b) (below-left), 13(b) (right); §§IX.A.1(a)-(b).) Similar arrangements exist with the other discussed exemplary system configurations. (Ex.1002, ¶116.)

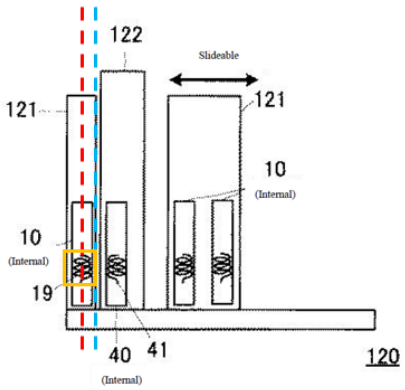

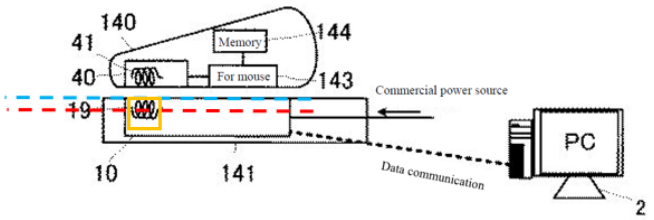

Okada does not expressly state that the "**first primary coil…is *substantially planar* and substantially parallel to a charging surface of the system**." But it would have been obvious to configure the *Okada* system to implement/use a planar primary coil (and secondary coil) in light of *Odendaal*. (Ex.1002, ¶117.)

Planar coils positioned parallel to a charging surface was known. (Ex.1002, ¶¶118-122; Ex.1027, 1-3; Ex.1015, FIGS. 1-2, 3-4, 7-12, Abstract, 1:5-2:29, 2:64-3:27, 3:39-51, 5:5-47, 5:48-9:5; Ex.1047, FIGS. 1-3, 6, 8A-9, ¶¶0002, 0006-0007, 0018-0025-0034; Ex.1025, FIGS. 1, 3, 8-9, 13, 1:10-2:3, 2:5-12 (reasons to consider thin coil designs), 2:14-3:2, 4:19-32, 7:25-9:28, 12:27-32, 14:4-17; Ex.1026, FIGS. 1-2, 5, 9A-9C, Abstract, 1:3-4:4, 4:6-9:4, 11:4-15; Ex.1009, Abstract, FIGS. 1-3, 1:4-51, 1:54-2:26, 2:47-3:8, 3:9-39, 4:18-60; Ex.1024, FIGS. 3, 8-9, 1:12-15, 1:39-2:29, 9:41-53, 10:45-57, 11:60-13:4; Ex.1028, Abstract, FIGS. 2-7, ¶¶0001, 0004-0007, 0025-0032, 0041; Ex.1029, 1-4, 9-19; Ex.1030, FIGS. 3-7B, 1:5-9, 1:59-61, 3:19-56, 4:62-567, 5:25-44; Ex.1036, Abstract, 2:22-3:6 ("primary

winding…***substantially parallel*** to [] planar **charging surface**" and formed on planar PCB), 5:22, 11:18, 23:20-24:8, 24:19-22.)

A POSITA would have been aware of such coil designs (and associated tradeoffs, e.g., size/weight/cost/performance) and thus motivated to consider relevant teachings (*Odendaal*) when configuring/implementing systems similar to *Okada*. (Ex.1002, ¶123; *e.g.,* Ex.1047, ¶0033.)

Odendaal discloses inductive power transfer technologies/techniques, and like *Okada*, is in the same technical field as the '942 patent, and discloses features reasonably pertinent to particular problem(s) the inventor for the '942 patent (and a POSITA) was trying to solve. (Ex.1001, 1:50-7:60; Ex.1008, Abstract, 1:5-3:57, 4:50-5:8, 5:24-28, 6:59-64; §IX.A.1(a); Ex.1005, FIGS. 1, 2, 7, 9-12, ¶¶0037-0048, 0049-0058, 0094-0109, 0116-0126.) Such teachings thus would have been consulted when designing/implementing a contactless/inductive charging system, like *Okada*. (Ex.1002, ¶¶124-125.)

Odendaal discloses known use of **planar-type inductor coils** in an inductive power transfer system, for, *e.g*., charging a cellphone battery. (Ex.1008, FIGS. 1A-1B, 2A, 2C, 8E, 1:58-2:43.) *Odendaal* describes planar resonator for power transfer with characteristics of an integrated inductor-capacitor transformer. (*Id.*, 1:53-57.) The planar resonator includes spirals on opposite sides used for energy transfer to charge a cellphone "without physical wires" (*id.*, 1:60-67) and can do so "across the

"interface-of-energy-transfer" (IOET) in "…**magnetic form**…." (*Id.*, 2:1-7, 2:7-10 (permitting transformer action "**without** capacitive energy transfer"), 2:65-3:5, 4:44-5:8, 6:1-18.) "The spiral-shaped conductor may comprise **pcb** spiral-wound conductors" and "a battery charging circuit can be coupled to one of the…spiral shaped conductors, and **load…coupled to the other**…" where "coupling between" the battery/charger "may comprise…**magnetic coupling,** wherein power is transferred by the **coupling of…and/or magnetic flux** across the IOET." (*Id.*, 2:55-64.) *Odendaal*'s teachings of "**planar**" coils (*id.*, 1:60-67) is consistent with that known in the art. (Ex.1002, ¶¶85-88, 126-127; Ex.1008, 1:60-67, 2:19-21, 2:29-44, 3:65-67.)

Moreover, consistent with the thin form factor configurations of *Okada* (*e.g.*, charging pads/case), *Odendaal* discloses that the spiral coils "are preferably integrated into a **planar (flat/thin) structure**" (Ex.1008, 3:3-5) and may conform to the housing surface to facilitate charging a device "in close proximity" (*id.*, 2:29-44). Such arrangements disclose coils that are parallel to a system's surface. (Ex.1002, ¶128.)

In light of such teachings, and state-of-art knowledge, a POSITA would have found it obvious to modify the *Okada* system to use a "**primary coil**" that is **"substantially planar and substantially parallel to a charging surface of the system**" (and complemented such design with corresponding planar

secondary/portable-device coil(s)) to expand/complement applications compatible with those contemplated by *Okada* to use thin(ner) devices. (Ex.1002, ¶129; §IX.A.1(a).) Such a modification would have provided options to reduce the volume the coil(s) occupy, device size/weight, and expanded/enhanced applications of *Okada* (*e.g.*, pads, tables) (*id.*; §IX.A.1(a); Ex.1005, FIGS. 1, 9, 10-16, ¶¶0033-0034, 0116-0146), and options to reduce the distance between primary/secondary planar coils (promoting close proximity coupling (Ex.1008, 2:29-44) for improving power transmission efficiency, reducing energy waste, and shortening charging time. (Ex.1002, ¶129; Ex.1005, ¶¶0066-0068, 0112, FIGS. 4(a)-4(b); Ex.1036, 24:19-22.) A POSITA would have appreciated that implementing complementary planar coils (primary-secondary) would have promoted efficient energy transmission between a charger/receiver, especially where the coils were aligned to allow the perpendicular magnetic field generated by the primary coil(s) to be efficiently received by the receiving coil(s). (Ex.1002, ¶¶129-130; §IX.A.1(c)(2).)

A POSITA would have had the skills and rationale to implement the above-modification while considering design tradeoffs and associated techniques/technologies with a reasonable expectation of success. Especially given such modification would have involved known technologies/techniques (*e.g.*, planar coils to facilitate wireless power transfer) to yield the predictable result of providing an inductive powering/charging system with thinner charger units, like that

contemplated by *Okada-Odendaal*. (Ex.1002, ¶131; §IX.A.1(a).) *See KSR Int'l Co. v. Teleflex, Inc.*, 550 U.S. 398, 416 (2007).

c) Limitation 1(c)

Okada-Odendaal and *Kook* discloses and/or suggests this limitation. (Ex.1002, ¶¶132-165.)

(1) <u>1(c)(1):</u> a first drive circuit, including a FET driver, a capacitor, and a FET switch, coupled to a DC voltage input and coupled to the first primary coil,

Switching circuit 15 in PTM10 generates/supplies a switching pulse signal to coil 19 via a switch 21/22/23 (which can be MOSFETs ("**FET switch**")) selected by power switching circuit 24. (Ex.1005, ¶0049.) The pulse signal is also converted (via circuits 16-18) to V_{CC} for powering PTM10 components. (§IX.A.1(a); Ex.1005, ¶¶0038-0040, 0046, 0049-0051, FIG. 2.) Such PTM10 components are (directly/indirectly) coupled/configured to drive/power primary coil 19. Circuits 16-18 provide power to other components, *e.g.*, circuit 33, which outputs signals driving coil 19 to send a carrier wave signal to PRM40. (Ex.1005, ¶¶0062-0063, ¶¶0010-0014, 0042-0046, 0055-0058, Claims 2-3, 6; §§IX.A.1(c)(3), IX.A.1(e)-(f).) Circuit 15 also provides the switching pulsed signal to (FET) switch 21/22/23, and together with circuit 24, provides signals that drive coil 19 to transfer power. (*Id.*; Ex.1005, ¶¶0040, 0049-0051, 0070-0073.) (Ex.1002, ¶¶133-134.)

Thus, *Okada*'s examples of a "**first drive circuit**" include: **(1)** switching circuit 15 (including as modified below) and circuits 21-24, **(2)** same with circuits 16-18 (providing Vcc for IC 20, including circuit 24 (controlling (FET) switches 21/22/23)), **(3)** same with circuit 33 (driving coil 19 to send carrier wave to PRM40), or **(4)** a combination of such components (with/without other circuitry in IC 20). (*Id.*, FIG. 2 (annotated-below (pink)).) The "**first drive circuit**" includes an "**FET driver**" (*e.g.,* switch 15, circuit 24, and/or one or more of circuits 16-18, or a combination of such components) and "**a FET switch**" (*e.g.*, switch 21/22/23).[6] These components forming the "**first drive circuit**" are (directly/indirectly) coupled to rectifier/smoothing circuits 13/14 (providing a "DC voltage") (Ex.1005, FIG. 2, ¶0038, FIG. 17, 0148-0149 (battery 181 input)) thus having a "**DC voltage input**" and also (directly/indirectly) coupled to coil 19 ("**first primary coil**") (Ex.1005, FIG. 2, ¶¶0039-0049; Ex.1002, ¶135).

[6] *Okada*'s circuitry that provides a switching signal to power primary coil 19 is similar to drive circuitry discussed in the '942 patent. (§IX.A.1(a); Ex.1001, 25:15-19, 26:42-43, 44:7-16, 46:39-40.) (Ex.1002, ¶135.)

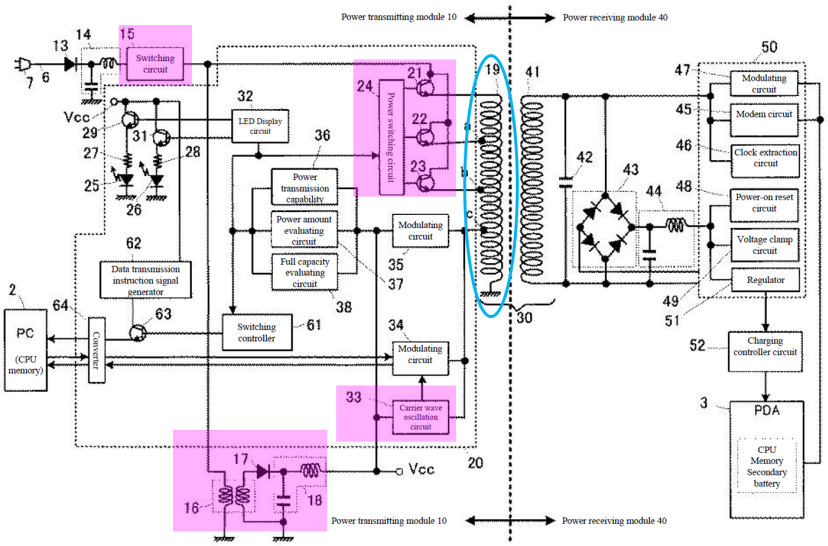
Power transmitting module 10
Power receiving module 40
Switching circuit
LED Display circuit
Power switching circuit
Power transmission capability
Power amount evaluating circuit
Full capacity evaluating circuit
Modulating circuit
Data transmission instruction signal generator
Switching controller
Carrier wave oscillation circuit
PC
(CPU memory)
Converter
Vcc
Modulating circuit
Modem circuit
Clock extraction circuit
Power-on reset circuit
Voltage clamp circuit
Regulator
Charging controller circuit
PDA
CPU
Memory
Secondary battery

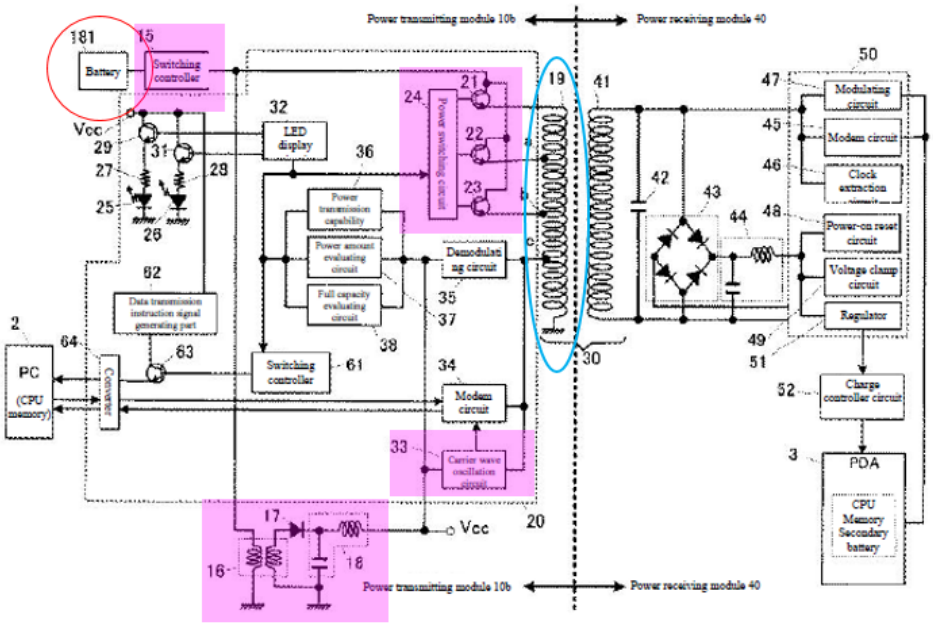
Power transmitting module 10b
Power receiving module 40
Battery
Switching controller
LED display
Power switching circuit
Power transmission capability
Power amount evaluating circuit
Full capacity evaluating circuit
Demodulating circuit
Data transmission instruction signal generating part
Switching controller
Modem circuit
Carrier wave oscillation circuit
PC
(CPU memory)
Converter
Vcc
Modulating circuit
Modem circuit
Clock extraction circuit
Power-on reset circuit
Voltage clamp circuit
Regulator
Charge controller circuit
PDA
CPU
Memory
Secondary battery

Okada does not expressly disclose the drive circuit(s) having a "**capacitor.**" Nevertheless, a POSITA would have found it obvious to modify the *Okada-Odendaal* system to include such features in light of *Kook*. *Kook* is in the same technical field as the '942 patent and *Okada* and discloses features reasonably pertinent to particular problem(s) the inventor for the '942 patent (and POSITA) was trying to solve. (Ex.1001, Abstract, 1:54-5:16; §§IX.A.1(a)-(b); Ex.1059, Abstract, ¶¶0009, 0035, 0041, 0049.) Thus, a POSITA would have consulted *Kook* in context of *Okada-Odendaal*. (Ex.1002, ¶136.)

Kook discloses "a non-contact charger capable of wireless data communication and…charging battery-pack of a mobile device." (Ex.1059, Abstract, ¶¶0001, 0006, 0037-0042.) Charger 1 (blue below) receives power from computer 100 to power/charge mobile device 300 with battery pack 200 (containing battery 230 (yellow)), via primary coil 70 and secondary coil 80 (both orange). (Ex.1059, ¶¶0015, 0032, 0036-0037, FIG. 1 (below (rectification-block 81 of battery pack 200 providing VREC (purple) to charger controller 210)).) (Ex.1002, ¶¶92-97, 137.)

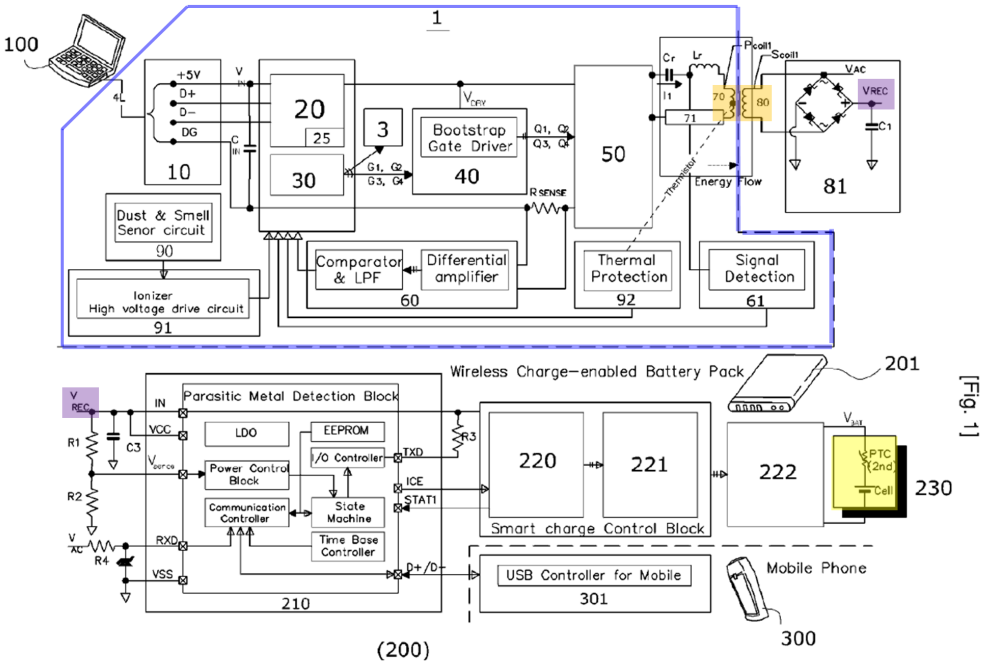

[Fig. 1]

Charger 1 includes MPU 30 controlling "internal elements" of charger 1. (Ex.1059, ¶0041.) Also gate drive block 40 (magenta below) and serial resonator converter 50 (*e.g.*, a LLC full/half wave type serial resonator converter, green), a "C-**L resonator**" (red (**Cr**/Lr)), coupled to primary coil 70, and current sensing block 60 (blue). (*Id.*, ¶¶0032-0035, 0041.) (Ex.1002, ¶138.)

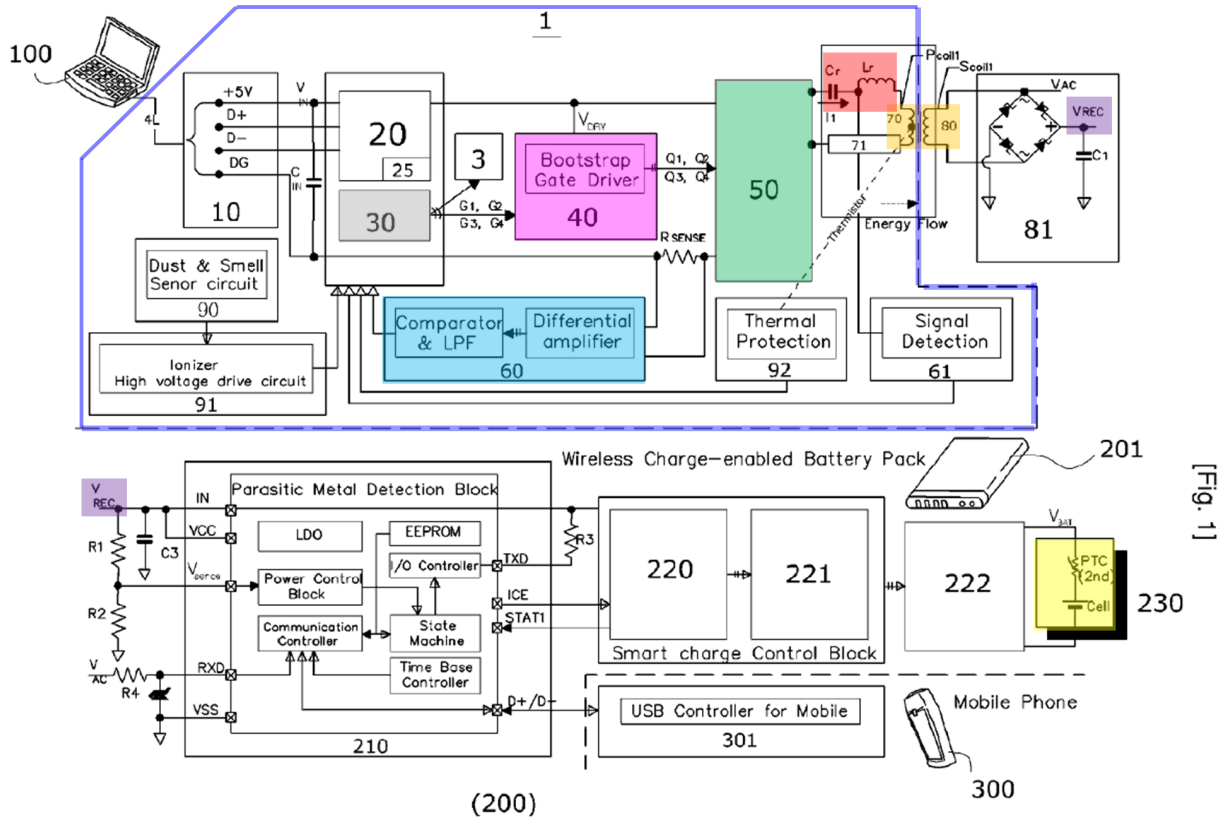

[Fig. 1]

"C-L resonator" coupled to primary coil 70, including capacitor Cr, also discloses a "**capacitor**." (Ex.1059, FIG. 1, ¶0041.) By using a "resonator converter to induce LC resonance," it "make[s] an electric current into a sine wave and transmit[s] an electric power to the secondary side by means of the inductive coupling." (*Id.*, ¶0049; Ex.1002, ¶139.) Consistent with that known in the art and *Kook*, a POSITA would have understood such a capacitor-based circuit would have allowed the coil to transmit less-distorted and efficient signals (*e.g.,* sine wave) with reduced harmonics. (Ex.1002, ¶¶57-65, 139.) Indeed, a POSITA knew that capacitor-based circuits (similar to that taught by *Kook*) improved signal

transmissions in inductive-based systems, like *Okada-Kook* (*e.g.*, minimizing/reducing unwanted radiations and heat issues caused by harmonics, etc.). (*Id.*; Ex.1016, 631 ("Resonant circuits…useful for constructing filters"), 641, 798, ("**blocks out all higher harmonics**"); Ex.1013, (capacitor/switches reducing harmonics from primary coil), FIGS. 3 (annotated-below), 6, 3:29-4:5, 4:19-5:7, 7:24-8:14, 8:17-23, 24-31, 9:26-12:27; Ex.1008, 2:16-19 (resonant tank); Ex.1001, 22:13-30 (acknowledging harmonics are "undesirable").) (Ex.1002, ¶¶140-141.)

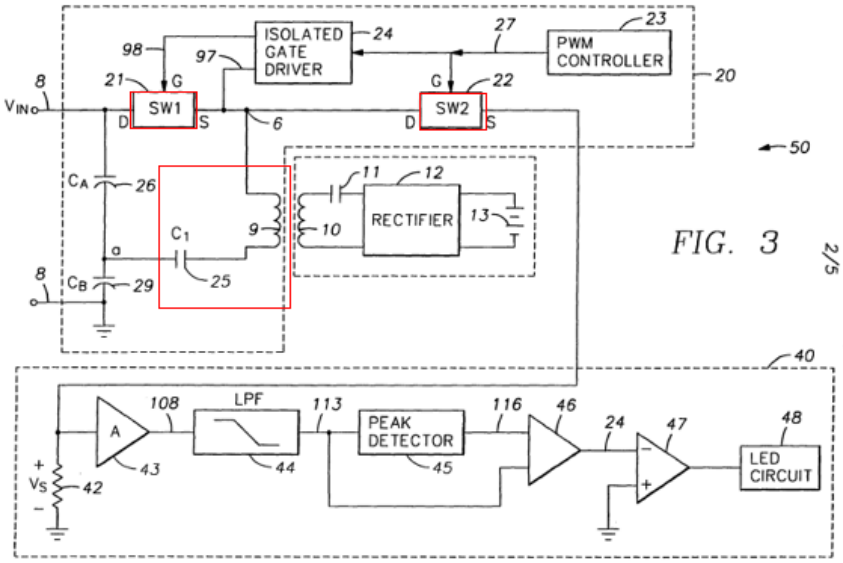

(*See also* Ex.1012, FIGS. 2, 5 (C1 25, inductor 9), 8, 3:30-62, 8:47-9:51; Ex.1014, 67-68 ("filter…for ***reduction of harmonic output***"); *id.*, 62-68; Ex.1015, FIGS. 1-2, 5-12, Abstract, 1:55-2:10, 3:28-51, 4:22-44, 5:45-6:4; Ex.1020, Abstract, (harmonic reducing tuning capacitor); Ex.1021, ¶¶00164-0165; Ex.1029, 22-25; Ex.1002, ¶141.)

In light of *Kook*, a POSITA would have been motivated to consider/implement a capacitor with the above-discussed "first drive circuit" and primary coil arrangement in PTM10 of the modified *Okada-Odendaal* system to improve power transmission and reduce harmonics, consistent with that known in the art. (*Id.*; Ex.1002, ¶142.) A POSITA would have had the skill and rationale in implementing, and expectation of success in achieving, the above-modification, especially given the known benefits of capacitor-based filter circuits and use of capacitor(s) to enhance the transmission efficiency in inductive power transfer systems, and that the modification would have involved implementation of known technologies/techniques (capacitor-based filter design). For example, a POSITA would have known, and been motivated to consider/implement, an appropriately designed capacitor-based circuit/filter positioned between switches 21/22/23 and primary coil 19, or between switching circuit 15 and the switches, (each as part of the "**first drive circuit**" discussed above), which would have achieved the above-noted filtering benefits (*e.g.*, reduced harmonics). (Ex.1002, ¶142.)

Beyond the capacitor-based disclosures noted above, a POSITA would have also recognized other advantages/benefits from *Kook*'s teachings in context of *Okada* (which are relevant to features recited in other limitations (e.g., limitations 1(c)(3), 1(k), discussed below (§§IX.A.1(c)(3), IX.A.1(k)).) Namely, while capable of adjusting power levels based on device power requirements and selective

switching at the **onset** of a charging process, *Okada* does not expressly indicate controlling power levels **during** the charging process. (Ex.1005, ¶¶0069-0076, FIG. 3.) Nevertheless, in light of *Kook*'s other teachings, a POSITA would have found it obvious to modify the *Okada-Odendaal* system to include such features. (Ex.1002, ¶143.)

Namely, *Kook* also describes feedback controlled type functionalities that allow the charger to adjust the operating frequency of the charger circuit, to control charging power/voltage to the portable device **during** charge/power transfer operations. (Ex.1002, ¶144.) Regarding FIG. 1 (annotated-above) *Kook* explains current sensing block 60 "stably control[s] an electric power through a current **feedback** using an automatic variation algorithm of **primary** frequency so as…to control a voltage of a **secondary** rectification terminal in the charging battery-pack 200." (Ex. 1059, ¶0041.) Current sensing block 60 also analyzes "a signal of the secondary coil 80 to recognize the mobile device 300, monitor the primary coil 70 and the secondary coil 80 to control a charge voltage to a stable voltage." (*Id*., ¶0033; *id.*, ¶0047 ("voltage of the secondary rectification terminal…is controlled to a constant voltage" via coils 70/80, which "may control the secondary charging power…using an automatic variation algorithm of primary frequency of the non-contact charger 1"), ¶0083 ("adjusting a voltage of the secondary side to the stable voltage…using a parameter (frequency)."); Ex.1002, ¶144.)

A POSITA would have understood that resonator converter 50 includes switching FETs and a capacitor. (Ex.1002, ¶145.) Indeed, *Kook* describes bootstrap ***gate*** drive block 40" providing four signals Q1-Q4 to serial resonator converter 50. (Ex.1059, FIG. 1, ¶¶0009, 0032-0035, 0041.) A POSITA would have understood such signals necessarily control corresponding "gates" of associated **FET** switches in converter 50 since it was understood that only FET switches have "gate(s)" (unlike a BJT) and *Kook* discusses "switching" in relation to converter 50. (Ex.1002, ¶145; Ex.1059, ¶¶0049, 0075.) As explained, *Kook* describes converter 50 as including an "LLC" serial resonator converter (Ex.1059, ¶¶0009, 0041, 0033, 0064), which a POSITA would have understood to reflect a **capacitor** ("C") with inductors ("LL"). (Ex.1002, ¶145.)

In light of *Kook*, a POSITA would have been further motivated, and found obvious, to configure the above modified *Okada* system such that the switching circuit 15 (part of the "**first drive circuit**" (as modified above to implement an **FET driver**, **FET switch**, and a **capacitor** coupled to the primary coil, similar to the features described/suggested by *Kook*, of the "**system**") to improve/enhance power transmission control during charging operations, by adjusting the switching/operating frequency of the primary circuitry in response to current feedback information, while providing a more efficient power transfer via capacitive filtering as discussed above. (Ex.1002, ¶146.) A POSITA would have appreciated

the guidance of *Kook*, which describes a closed-loop feedback arrangement, where powering/charging is controlled through a current feedback by varying the primary-side circuit operating frequency using FET driver/switch/capacitor-based circuitry.[7] (*Id.*, ¶146; Ex.1059, ¶¶0033, 0041, 0047, 0083.)

Such a configuration would have improved/complemented the *Okada-Odendaal* system, which also uses device information to control/adjust power delivery in a closed-loop feedback fashion, but does so at the onset of charging, not during charging. (Ex.1005, ¶¶0069-0076, FIG. 3; §§IX.A.1(a)-(b).) Implementing features similar to those described above would have improved power transmission control in the modified *Okada* system, providing a stabilized voltage for the device battery, for efficient power transfer/consumption during charging operations. (Ex.1002, ¶147.)

A POSITA would have had the skill/rationale in implementing, and expectation of success in achieving, the above-modifications, especially given the use of capacitor(s) and closed-loop feedback control technologies/techniques for

[7] A POSITA would have appreciated configuring the "drive circuit" in the modified *Okada* system to use "FET switches/FET driver"-circuitry with the modified switching circuit 15 to accommodate the frequency adjustment features discussed above. (Ex.1002, ¶146.)

adjusting power delivery was known (*e.g.*, *Okada* and *Kook*). (Ex.1002, ¶148.) Such a modification would have involved applying known technologies/techniques (*e.g.*, FET-based drive circuitry in closed-loop feedback power transfer system with capacitive filtering to adjust power delivery (*Okada* and *Kook*, state-of-art knowledge)) to yield the predictable result of an inductive power/charging system that ensures sufficient power is available to portable device during power delivery that achieves energy-efficient continuous power transfer with reduced heat waste and signal distortion. (Ex.1002, ¶148.) *KSR* at 416-18.

There were various ways for a POSITA to implement such modifications. (Ex.1002, ¶149.) For example, in addition to implementing an appropriately designed/positioned capacitor-based circuit/filter (*see supra*), a POSITA would have been motivated to configure/leverage features/components in *Okada*'s system that are used to receive/pass/process device information for power transfer control (*e.g.*, demodulator 35, circuits 36-38 (Ex.1005, ¶0064; *infra* §§IX.A.1(d)-(m)) to achieve the noted predictable and beneficial power delivery features during charging/powering operations (Ex.1002, ¶149). For instance, a POSITA would have recognized/appreciated the benefits of configuring the system to receive current feedback information/signals (*e.g.,* via demodulator 35, processed by one/more circuits (*e.g.*, 36-38), provided to the modified switching circuit 15) to vary the operating frequency of the primary side "drive circuit" to control a voltage of output

by the rectifier circuitry 43 used to charge/power the battery in the portable device. (Ex.1002, ¶149; *infra* §§IX.A.1(c)(3)-(m).)[8]

> **(2) <u>1(c)(2):</u> wherein during operation the first drive circuit is configured to apply an alternating electrical current to the first primary coil at an operating frequency and duty cycle to generate an alternating magnetic field in a direction substantially perpendicular to the plane of the first primary coil and the charging surface of the system to provide power inductively to the portable device,**

The *Okada-Odendaal-Kook* combination discloses/suggests this limitation. (Ex.1002, ¶¶150-156; §§IX.A.1(a)-(c)(1).)

As discussed, the *Okada-Odendaal-Kook* system would have been configured to include a first drive circuit (with FET driver, FET switch, capacitor) having current-based closed-loop feedback control to adjust the power/voltage used to charge the battery of the portable device by adjusting the operating frequency on the primary side. (§IX.A.1(c)(1).) In light of *Kook-Okada,* a POSITA would have understood that the configured drive circuit in the *Okada-Odendaal-Kook* system, during operation, would have provided an **alternating electrical current** to the

[8] Such configurations/modifications are exemplary. Other successful designs/configurations within the capabilities/knowledge of a POSITA would have been contemplated to achieve the same functionalities. (Ex.1002, ¶149.)

primary coil 19 at an "**operating frequency and duty cycle**," consistent with the features taught/suggested by *Kook* and *Okada*. (Ex.1002, ¶¶151-153; Ex.1059, ¶¶0041 ("stably controlling an electric power through a current feedback using an automatic variation algorithm of primary frequency"), 0047, 0083 ("receives AC current from the secondary coil 80"); §IX.A.1(c)(1); Ex.1005, ¶¶0064-0069, 0074-0076 (properly aligned coils maximize coupling when coil 19 is activated), 0110-0111.)

A POSITA would have also understood that the **ac signal applied to the primary coils** in the modified *Okada* system (employing planar coil(s)) would have generated a "**substantially perpendicular**" "**alternating magnetic field**" as claimed, given such a field would have been the natural result of activating the planar primary coil to inductively transfer power to the portable device as described by *Okada*, *Odendaal,* and *Kook*. (Ex.1002, ¶¶152-155; §IX.A.1(c)(1); Ex.1005, ¶¶0035, 0051, 0056, 0063, 0066, 0121, 0127-0132, FIGS. 11(b)/13(b); Ex.1059, ¶¶0032, 0037-0042; Ex.1011, 557-562, 593-594, 601; Ex.1009, 2:62-3:8 ("current is inducted into" receiving device "when magnetic field lines are approximately 90 degrees to the first part of the transformer"), 1:54-2:18, 3:20-4:11, FIGS. 1-3; Ex.1010, FIGS. 1-5B, 8:55-9:52, FIGS. 6A-10, 7:21-8:54, 9:53-10:22, 11:27-14:67; Ex.1029, 3-4, 27-50); Ex.1019, FIG. 2B, ¶¶0027, 0064.)

Indeed, a POSITA would have understood the planar primary coils in the *Okada-Odendaal-Kook* system, when providing power inductively to the coil(s) of the portable device (which also may be planar in the modified system), would have likewise generated a magnetic field that was substantially perpendicular to the plane of coils 19 and system's charging surface, as known in the art. (Ex.1002, ¶¶155-156; §IX.A.1(c); Ex.1011, 558, 559 ("magnetic field at the center of [a wire] loop is perpendicular to the plane of the loop"), 562-564, 592; Ex.1048, Abstract, FIGS. 1-6, 1:28-2:4, 2:27-3:14, 4:11-24, 5:23-6:15, claims 1-88; Ex.1049, Abstract, FIGS. 1, 5-6, 9, 11-12, 24-26, ¶¶0008-0010, 0044-0051, 0065-0066; Ex.1050, Abstract, FIGS. 1-5, 9A-9C, 5:22-6:45, 11:22-33, 12:28-38, 16:25-17:23, 17:61-18:3 ("**substantially perpendicular**" magnetic field from planar coils).)

(3) <u>1(c)(3):</u> wherein the operating frequency is within a range of frequencies (i) that are near a resonance frequency of a circuit comprising the first primary coil and the capacitor, (ii) such that increasing values of the operating frequency within the range of frequencies would correspond to a lower voltage or current induced in an output of the receiver circuit and (iii) that allow activation and powering of the receiver unit and charging the battery of the portable device;

The *Okada-Odendaal-Kook* combination discloses/suggests this limitation. (Ex.1002, ¶¶157-165.)

Consistent with that discussed above (§IX.A.1(c)(1)-(2)), a POSITA would

have been motivated to configure the system's first drive circuit to provide a sine wave-type signal to primary coil 19 coupled to a resonating circuit (*e.g.*, C-L circuit), based on circuitry/techniques consistent with those taught by *Kook*, such as a serial resonator converter type circuitry that "induce[s] **LC resonance**" to provide "a sine wave" to a primary coil coupled to a "**C-L resonator**." (§IX.A.1(c)(1); Ex.1059, ¶¶0032-0035, 0047, 0055, 0081.) *Kook* describes that "the **switching frequency** [may be] set to a higher level than the **resonant frequency**" (Ex.1059, ¶0049) and that "resonator converter 50…may operate at a lower **switching frequency** than a **resonance frequency**" to reduce "switching loss of the [secondary rectifier] diodes." (*Id.*, ¶0075.) A POSITA would have understood that *Kook*'s resonant frequency is that of a circuit including at least the primary coil and associated capacitor, *e.g.*, Cr of the C-L resonator and/or the capacitor of the [LLC full-bridge] serial resonator converter 50 ("**a resonance frequency of a circuit comprising the first primary coil and the capacitor**") as *Kook* discloses transmitting power from the primary coil by using the resonance converter to "induce **LC resonance**." (Ex.1002, ¶¶158-159; Ex.1059, ¶0049.) The above modified *Okada* system (implementing a resonant circuit (C-L) and frequency-based switching operations (§IX.A.1(c)(1)-(2)) would have been configured to provide similar features for similar reasons explained in context of *Kook*'s teachings. (Ex.1002, ¶159.)

Also consistent with *Kook*'s teachings, a POSITA would have found obvious, to configure the "drive circuit" in the above *Okada-Odendaal-Kook* system to apply current to the primary coil 19 at an operating frequency that is "**within a range of frequencies**" that are "**near**" the "**resonance frequency**" set by the capacitor-based resonance circuit (L-C circuit) in the modified system as discussed above and in §§IX.A.1(c)(1)-(2), to effectively filter the unwanted harmonics for reasons explained. (§IX.A.1(c)(1); Ex.1002, ¶160.)

Moreover, as explained, a POSITA would have been motivated to design/configure the LC circuit in the modified *Okada* system to filter signals having frequencies higher than the resonance frequency (as it was known such signals are unwanted harmonics). (§IX.A.1(c)(1); Ex.1002, ¶161.) A POSITA would have thus understood as a natural result of the operating frequency provided by the modified "driver circuit" being increased (including when operating in accordance with the frequency adjustment features discussed above (§IX.A.1(c)(1)-(2)) and within the range of frequencies that would produce a sine wave signal or "near" the resonance frequency of the circuit as noted above), at least some of the fundamental sine wave signal (non-harmonics signal) would be filtered by the LC circuit, resulting in a signal having reduced strength (in terms of its voltage/current, due to increased impedance) being transmitted to the portable device's receiver circuit (§IX.A.1(a)). (*See supra*; Ex.1002, ¶161; Ex.1008, 5:33-55 (FIG. 8B showing that "there is

minimal impedance at…the resonant frequency”).) Consequently, the output signal induced at the output of “receiver circuit” (provided to the battery of the portable device) in modified *Okada* system would have a corresponding lower voltage/current, consistent with that recited in part “**(ii)**” of limitation 1(c)(3). (Ex.1002, ¶162; §IX.A.1(a).) As such, for reasons explained, a POSITA would have been motivated, and found obvious to configure the *Okada-Odendaal-Kook* system to implement closed-loop feedback controlled frequency switching power delivery (consistent with that discussed above and recited in limitation 1(c)) based on device information to provide appropriate power to accommodate changes in PDA3’s load during power/charging operations. (§§IX.A.1(a)-IX.A.1(c)(2); *supra*; Ex.1002, ¶162.)

For similar reasons, the modified *Okada-Odendaal-Kook* system (and its “drive circuit”) would have been configured (and thus discloses/suggests) operating within the above-described range of frequencies that result in wirelessly powering/charging of the battery in the portable device. (Ex.1002, ¶163.) As discussed, the *Okada-Odendaal-Kook* system would have been configured to improve control of the power transmission by adjusting the switching/operating frequency of the primary-side circuitry, *e.g.*, including the “first drive circuit” with modified switching circuit 15, while providing a more efficient power transfer via capacitive filtering during powering/charging of the portable device’s battery.

(§§IX.A.1(c)(1)-(2), IX.A.1(a)-(b).)

Further, *Okada* discloses that circuit 15's switching signal is converted to a V_{CC} to power components in PTM10, including circuit 33, which generates "a prescribed carrier wave at a certain interval" that is sent to PRM40. (Ex.1005, ¶¶0039, 0056-0057; §IX.A.1(c)(1).) A DC signal "generated by a carrier wave provided by the carrier wave oscillating circuit 33 can be **used as a driving power source for the clock extracting circuit 46 and the modulating circuit 47**" in the "**receiver circuit**" of PRM40. (Ex.1005, ¶0058; §IX.A.1(a).) The carrier wave is periodically transmitted to PRM40 even during power transmission and, based on responsive/received device information, PTM10 determines whether PDA3 remains and/or is properly positioned. (Ex.1005, FIG. 3, ¶¶0074-0075.) Only when properly positioned does PDA3 receive power until fully charged, which is determined using the "periodically transmitted" carrier wave. (Ex.1005, FIG. 3, ¶¶0074, 0076.) A POSITA would have thus been motivated by such teachings to configure the above-discussed modified *Okada-Odendaal-Kook* system to include similar features to "**allow activation and powering of the receiver unit and charging the battery of the portable device**" as claimed. (Ex.1002, ¶¶164-165.)

d) a first sense circuit, including a low pass filter and an amplifier, coupled to the first primary coil to detect communication of information induced in the first primary coil by the receiver coil; and

The *Okada-Odendaal-Kook* combination discloses/suggests this limitation. (Ex.1002, ¶¶166-172; §§IX.A.1(a)-(c).)

In *Okada*, PTM10 transmits a carrier wave signal to PRM40, resulting in PDA3 to generate/send a modulated signal including device information back to PTM10 via coils 41 and 19. Circuit 35 "demodulates modulated signals included with the voltage from" primary coil 19 (Ex.1005, ¶0042), and the information is evaluated by circuits 36-38 as part of power transfer operations. (Ex.1005, FIG. 3, ¶¶0060-0077; Ex.1002, ¶167.) *Okada* explains that the modulation method may be based on "periodic intensity modulation of a carrier wave and may use a phase modulation method to express 0/1 information via phase change information of a signal." (Ex.1005, ¶0058.) Such "information" is "induced by the receiver coil and the receiver circuit" given the device information is provided by PRM40 through its circuitry within the above "**receiver circuit**" (*e.g.,* modulator 47) and "**receiver coil**" 41, which inductively communicates the information consistent with known inductive coupling principles/operations. (Ex.1002, ¶167.)

Thus, demodulating circuit 35 is one example of "**a sense circuit**" given it senses/receives/demodulates a modulated response signal from PRM40 via coil 19 ("**communication of information in the primary coil induced by the receiver**

coil" (§IX.A.1(a)). (Ex.1005, FIG. 2, ¶¶0050, 0064, 0069, 0076; Ex.1002, ¶¶167-168.) *Okada*'s teachings are consistent with PO's litigation assertions, which point to a demodulator or the like for the claimed "**sense circuit**." (Ex.1018, 43-44 (referring to "**demodulation** circuitry"), 45-46 (demodulator), 47 ("a **demodulator** as relevant to this part of the claim").)[9] A POSITA would have understood the modified *Okada* system above (§§IX.A.1(b)-IX.A.1(c)) would have performed/included similar features as described by *Okada* and claimed. (Ex.1002, ¶168; *infra* §§IX.A.1(e)-(m).)

The information provided in *Okada*'s system is used to confirm power reception equipment, full charge, and/or power level. (Ex.1005, ¶¶0056-0064.) PDA3's presence is verified by measuring intensity of signal(s) communicated via the coils. (Ex.1005, FIGS. 4(a)-4(b), ¶¶0066-0068, 0074-0076, FIG. 8 (current sensor 91), 0110-0111.) (Ex.1002, ¶¶167-168.) For reasons above, a POSITA would have had the requisite skills, motivation, and expectation of success to configure/implement similar current sensing/detecting/modulation/demodulation features via a "sense circuit" in the *Okada-Odendaal-Kook* system for detecting communications of the information received at coil 19 so that it is timely/properly

[9] Petitioner does not concede any feature in the accused instrumentalities meet this or any claim limitation.

detected, demodulated, and used to verify capable and properly positions/aligned mobile device for power transfer. (§§IX.A.1(a)-(c); Ex.1002, ¶¶168-169.)

While *Okada* does not expressly disclose a sense circuit including "**a low pass filter and an amplifier**," it would have been obvious to implement such features in view of *Kook*. (Ex.1002, ¶170.)

In addition that discussed above (§IX.A.1(c)), *Kook* discloses that charger 1 includes **current sensing block 60** (blue in FIG. 1 below) that **monitors primary coil 70** to receive signals and associated information. (Ex.1059, ¶¶0008, 0010, 0032-0033, 0041 ("a current sensing block 60 for stably controlling an electric power through a current feedback"), 0045 ("current sensing block 60 receives a signal").)

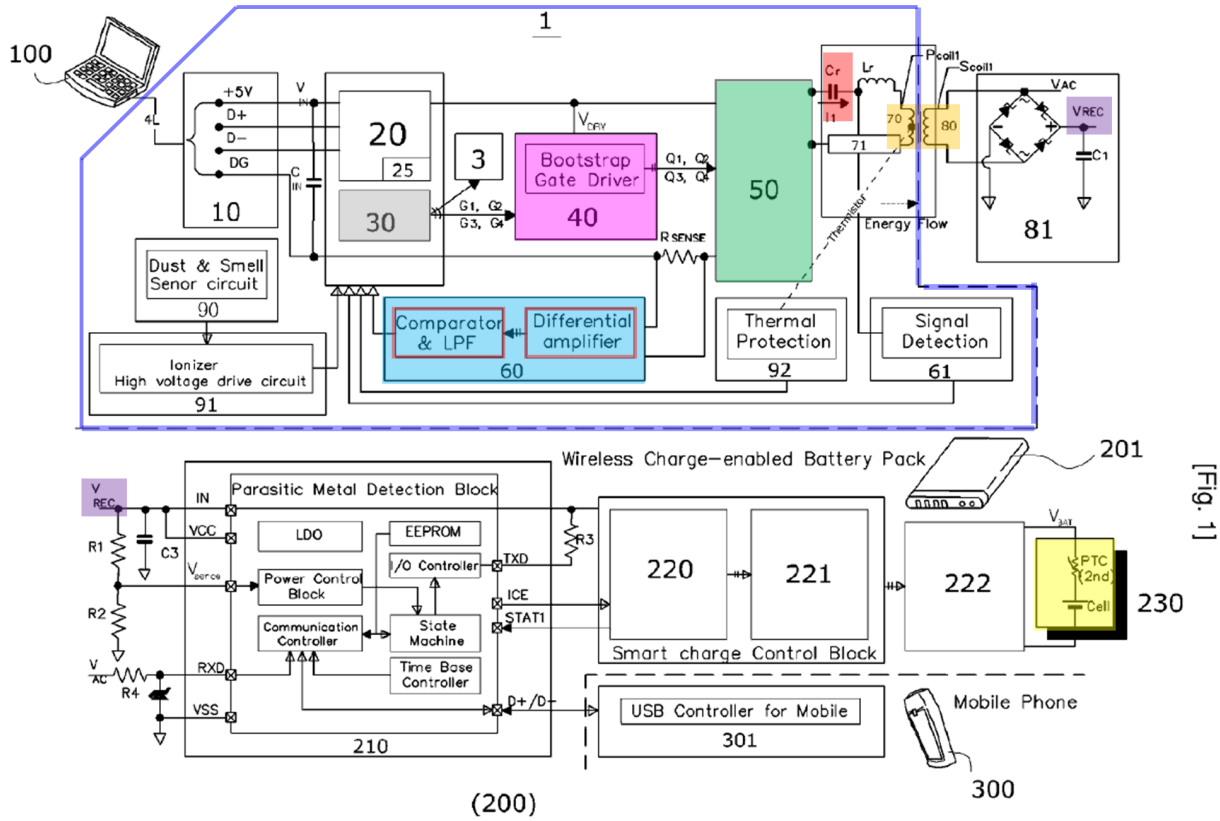

[Fig. 1]

Current sensing block 60 includes a differential "**amplifier**" and a "LPF" ("**Low Pass Filter**" (red above)). A POSITA would have understood that the "LPF" and "amplifier" would have improved the sensing/detecting of a signal as well as amplifying such a signal from a primary coil (similar to that described by) because it was known that an amplifier increases signal strength and a LPF reduces impacts of unwanted noise/distortion for optimizing signal detection/sensing. (Ex.1002, ¶170.)

In light of such teachings/knowledge, a POSITA would have been motivated to configure the "**sense circuit**" in the modified *Okada* system (*e.g.*, demodulating

circuit 35) to include amplifier/LPF circuitry to provide similar features like that suggested by *Kook*'s current sensing block 60 (*e.g.*, to amplify and filter the signal received by circuit 35 to ensure proper/efficient demodulation of the modulated information signal(s) sent by coil 41 in the receiver circuit). (Ex.1002, ¶171.)

A POSITA would have had the requisite skills and rationale to design/implement such features in the above modified *Okada-Odendaal-Kook* system, and done so with a reasonable expectation of success given the teachings of *Okada* and *Kook* in context of a POSITA's state-of-art knowledge at the time. (Ex.1002, ¶172.) Especially since such modification would have involved applying known technologies/techniques (e.g., amplifiers and LPFs) to predictably yield an inductive power transfer system having an optimized/improved sense circuit for monitoring current flow through the primary coil in accordance with the above-modified *Okada-Odendaal-Kook* system. (*Id.*; §IX.A.1(c).) *KSR*, 550 at 416.

e) a communication and control circuit, including a microcontroller coupled to the first drive circuit and the first sense circuit, configured to:

The *Okada-Odendaal-Kook* combination discloses/suggests this limitation. (Ex.1002, ¶¶173-178.)

Circuit 33 provides a carrier wave to PRM40 that causes responsive device information from circuit 47 of PRM40 via coils 41-19 to be received/processed by demodulator 35. (§§IX.A.1(a), 1(c)(3)); Ex.1005, ¶¶0056-0057, 0062-0064.)

Evaluation circuits 36-38 "perform various decision-making processes based on information included in the signal demodulated by the demodulating circuit 35." (Ex.1005, FIG. 2, ¶0042, FIG. 3, ¶¶0060-0077.) Those circuits control power transmission processes (FIG. 3) by providing signals to circuit 24 that controls/selects switches 21/22/23 (part of "**first drive circuit**"). (Ex.1005, FIG. 3, ¶¶0057-0076; §§IX.A.1(a), (c)(1).) Circuits 36-38 provide a signal to switching control 61 (Ex.1005, ¶0045) that determines whether "data can be **transmitted and received**" (*id.*, ¶0081, ¶¶0082-0085) and whether PDA3's charge capacity exceeds a "minimum capacity" for it to transmit/receive data (*id.*, ¶¶0082-0089, FIG. 6). Circuits 36-38 additionally control LEDs 25-26 that communicate charging status to a user. (*Id.*, ¶¶0041, 0053-0055, 0061, 0069-0072, 0077, FIG. 5; Ex.1002, ¶174.)

One or more circuits 36/37/38 disclose one example of "**a communication and control circuit** [FIG. 2, **yellow** below]…**coupled to the first drive circuit** [*e.g.*, §IX.A.1(c)(1) pink] **and the first sense circuit** [§IX.A.1(e), 35 blue]" as claimed. (*Supra*; Ex.1002, ¶175; Ex.1005, FIG. 2; *see also infra* §§IX.A.1(f)-(m).) Other components may also be included in such claimed "**communication and control circuit**," *e.g.*, switching controller 61, signal generator 62, controller 64, and/or "switching controller 73" in the multi-coil arrangement of FIG. 7 "system." (Ex.1005, FIG. 7 (**yellow** below), ¶¶0094-0115.)

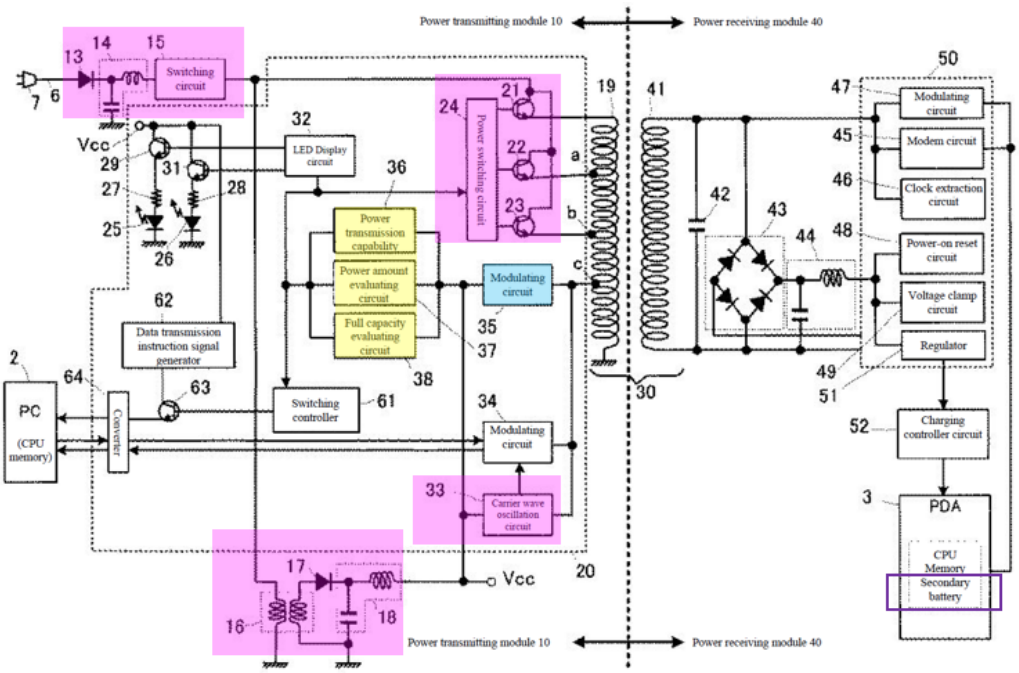
Power transmitting module 10
Power receiving module 40
Switching circuit
LED Display circuit
Power switching circuit
Power transmission capability
Power amount evaluating circuit
Full capacity evaluating circuit
Modulating circuit
Data transmission instruction signal generator
Switching controller
Converter
PC
(CPU memory)
Carrier wave oscillation circuit
Vcc
Modulating circuit
Modem circuit
Clock extraction circuit
Power-on reset circuit
Voltage clamp circuit
Regulator
Charging controller circuit
PDA
CPU
Memory
Secondary battery

FIG. 7

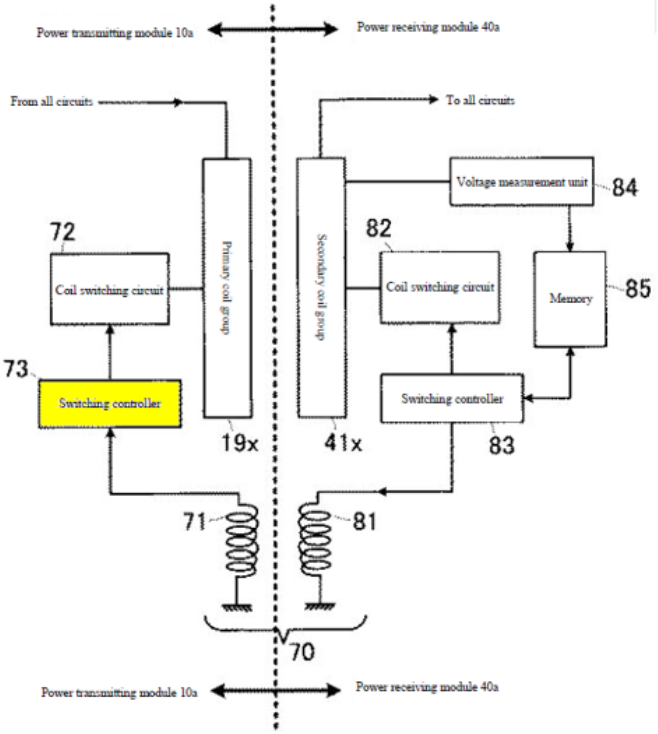
Power transmitting module 10a
Power receiving module 40a
From all circuits
To all circuits
Voltage measurement unit
Coil switching circuit
Primary coil group
Secondary coil group
Coil switching circuit
Memory
Switching controller
Switching controller
Power transmitting module 10a
Power receiving module 40a

Such inter-relationships would have enabled the "**communication and control circuit**" in the modified *Okada-Odendaal-Kook* system to perform various processes/functions discussed for limitations (f)-(m) below. (Ex.1002, ¶176; §§IX.A.1(f)-(m).) A POSITA would have been motivated to configure the "**communication and control circuit**" in the *Okada-Odendaal-Kook* system to, *e.g.*, process the current feedback information received from demodulator 35 (including as modified in view of *Kook*) for controlling the operating frequency of the modified "**first drive circuit**" to the voltage output of secondary rectification terminal during charging/powering operations, as explained. (§IX.A.1(c)(1); Ex.1002, ¶176.)

Circuits 33, 36-38 may be "configured on the same **IC chip**," *e.g.*, "**IC** 20," which includes other components like "controller" 61, 73. (Ex.1005, ¶¶0046, 0081-0084, FIGS. 2, 7.) Such circuitry would have been understood as compact integrated circuitry designed to perform given/certain operations in PTM10, which is consistent with a "**microcontroller**" as understood by a POSITA in context of the '942 patent. (Ex.1002, ¶177; Ex.1001, 24:32-45, 39:33-38 (exemplifying an "IC" or "chip" as a "microcontroller").) The same is true where "switching controller 73" is part of such "**communication and control circuit**" since it sends "instructions" to control the switching to select specific primary coils. (Ex.1005, ¶¶0095, 0101.)

To the extent it is argued/determined the claimed "microcontroller" requires a processor or the like, and *Okada* does not expressly disclose such features, it would have been obvious to configure PTM10 in the modified *Okada* system to include such features because it would have been a foreseeable application of known technologies/techniques to use in PTM10, which uses integrated circuit(s) to perform "control[ler]"-type operations. (*Supra*; Ex.1002, ¶178; Ex.1006, 5:65-6:59, FIGS. 4-5 (controller 40); Ex.1024, 6:60-7:14 (inductive power source including "microprocessor controller 308" for controlling modes of power supply operation), FIG. 3.) A POSITA would have appreciated implementing well-known processor-based microcontroller technology with PTM10 would have been an obvious variation to how the "communication and control circuit" can perform similar functionalities, while providing known programmable functionalities. Indeed, *Kook* discloses "MPU block 30 for controlling internal elements" of charger 1 (§IX.A.1(c)(1); Ex.1059, ¶0041), and a POSITA would have found it obvious to configure the components in the "communication and control circuit" of the modified *Okada* system with a microcontroller (or include a microcontroller to facilitate/work with such components and their associated functionalities), similar to how MPU block 30 operates in *Kook*. A POSITA would have had the skills and rationale to implement such a modification, and given the known technology and

Okada's teachings, would have done so with a reasonable expectation of success. (Ex.1002, ¶178.)

f) detect, through the first sense circuit, a received communication of information in the first primary coil;

The *Okada-Odendaal-Kook* combination discloses/suggests this limitation. (Ex.1002, ¶¶179-180.) For reasons explained for limitations 1(d)-1(e), one or more circuits 36/37/38 (part of the "**communication and control circuit**" in the modified *Okada* system) (§IX.A.1(e)) detects, through demodulator 35 ("**first sense circuit**") sensing, a modulated response signal from PRM40 (including information corresponding to PDA3 (*e.g.*, device compatibility/capability, power level, and charge status information)) via coil 19 ("**a received communication of information in the first primary coil**") used to facilitate power/charge operations, like that described by *Okada*. (§§IX.A.1(d)-IX.A.1(e); *see also* §§IX.A.1(a)-IX.A.1(c); Ex.1005, FIG. 3, ¶¶0056-0057, 0059-0077; Ex.1002, ¶180.)

g) operate the first drive circuit to inductively transfer power from the first primary coil to the receiver coil to activate and power the receiver unit to enable the receiver circuit to communicate the information detected in the first primary coil via the first sense circuit, wherein the received communication of information includes information to enable the communication and control circuit to configure the inductive transfer of power to the portable device,

The *Okada-Odendaal-Kook* combination discloses/suggests this limitation. (Ex.1002, ¶¶181-185.)

As discussed, a POSITA would have been motivated to configure the *Okada-Odendaal-Kook* system to implement closed-loop feedback controlled frequency switching power delivery based on device information to provide appropriate power to PDA3's battery during power/charging operations. (§IX.A.1(c).) Indeed, as explained (limitations 1(b)-1(f)), the communication/control circuit (*e.g.*, circuit(s) 36/37/38) in the *Okada-Odendaal-Kook* system would have operated the "**first drive circuit**" (§§IX.A.1(c)-IX.A.1(f), *e.g.,* with modified switching circuit 15 and *e.g.,* circuits 16-18, 21-24, 33) by *e.g.*, to provide control signal(s) to circuit 24 for selecting a switch 21/22/23 at the **onset** of a charging process, and/or by controlling power transmission based on received/demodulated current feedback information to control the operation frequency of the "**first drive circuit**" (*supra*) **during** the charging process in the modified system to inductively transfer power from coil 19 to coil 41 (the "communication and control circuit…configured to" "**operate the**

first drive circuit to inductively transfer power from the first primary coil to the receiver coil"), consistent with that disclosed/suggested by *Okada-Odendaal-Kook*. (§§IX.A.1(b)-1(f); Ex.1005, ¶¶0040, 0047, 0051, 0057, 0069-0073; Ex.1002, ¶182.)

Further explained above, operating the "first drive circuit" (including circuit 33) in the modified *Okada* system within a range of frequencies near a resonance frequency, would allow "**activation and powering of the receiver unit**…" (§IX.A.1(c)(3)) causing the "receiver circuit" (*e.g.*, modulator 47) to provide responsive device information that is received/processed by demodulator 35 ("**first sense circuit**") (§§IX.A.1(d)-(e)) based on modulated signals in primary coil 19 (§IX.A.1(d)) ("operate the first drive circuit…**to activate and power the receiver unit to enable the receiver circuit to communicate the information detected in the first primary coil via the first sense circuit**"). (Ex.1002, ¶183.) Consistent with *Okada*, in the above-discussed modified *Okada* system (*e.g.*, §§IX.A.1(b)-(IX.A.1(c)) circuits 36/37/38 (part of "**communication and control circuit**") controls the operating frequency of the modified switching circuit 15, which provides power to drive oscillating circuit 33 via circuits 16-18 (part of "**drive circuit**" §IX.A.1(d); Ex.1005, ¶¶0060-0064). Thus, after power/charge operations have begun, circuit 33 (part of "**drive circuit**") in the modified system would generate/transmit, via coil 19, the carrier wave that is used to "**activate and power**"

components in PRM40 ("**receiver unit**") to enable its "**receiver circuit**" (§IX.A.1(a)) to generate/communicate the responsive device information that is transmitted back to PTM10 via coils 41 and 19 based on modulation techniques/technologies as explained (§IX.A.1(e)). (Ex.1005, FIG. 3, ¶¶0062-0064, 0074-0090; §§IX.A.1(a)-(g); Ex.1002, ¶183.)

Also consistent with *Okada*'s teachings, the "**communication and control circuit**" in the modified system (*e.g.*, circuits 36/37/38) "perform various decision-making processes based on information included in the signal demodulated by the demodulating circuit 35" (§IX.A.1(d)). (Ex.1005, ¶¶0040, 0042, 0049-0051, 0057-0077, FIGS. 2-3.) Such processes include controlling/configuring inductive powering/charging of the portable device ("**wherein the received communication of information includes information to enable the communication and control circuit to configure the inductive transfer of power to the portable device**"), as explained above. (*Id.*; §§IX.A.1(a)-IX.A.1(g); Ex.1002, ¶¶184-185.)

h) wherein the received communication of information includes: information corresponding to a voltage or current induced by the first primary coil at the output of the receiver circuit; a unique identification code; and a power requirement; and

Okada-Odendaal-Kook discloses/suggests this limitation. (Ex.1002, ¶¶186-189.)

Consistent with *Okada*, in the above-discussed *Okada-Odendaal-Kook* system, PTM10 receives the device information from the "receiver circuit" in PRM40, which is provided to circuits 36/37/38 (part of "**communication and control circuit**") that use the information to "perform various decision-making processes" associated with powering/charging PDA3/battery. (Ex.1005, FIG. 2, ¶¶0042, 0057; *id.*, FIG. 3, ¶¶0060-0077; §§IX.A.1(b)-(g).) The device information includes, *e.g.*, "power consumption information" ("**a power requirement**") that is used to determine the power requirement/level for PDA3/battery. (Ex.1005, ¶¶0057, 0063-0064, 0069-0073, FIG. 3.) (Ex.1002, ¶187.)

Moreover, like *Okada*, *Kook* describes communicating mobile device related information to the charger. (§IX.A.1(c)(1).) Current sensing block 60 "stably control[s] an electric power through *a current feedback* using an automatic variation algorithm of primary frequency… *to control a voltage of a secondary rectification terminal* in the charging battery-pack 200," which describes information **corresponding to voltage/current induced by a primary coil at the output of the device's receiver circuitry**. (Ex.1059, ¶¶0041; *see also id.*, ¶¶0047, 0054, 0071, 0083.) *Kook* also discloses that "a unique ID" ("**a unique identification code**") is "generated in the [battery or mobile device] in response to the pulse signal of the non-contact charger 1" and is "transmitted to the non-contact charger 1," which,

based on the unique ID, supplies power to the battery/mobile device. (Ex.1059, ¶¶00012, 0046.) (Ex.1002, ¶188.)

Based on such teachings/suggestions, in addition to other teachings/suggestions in *Kook-Okada* and reasons discussed above (§IX.A.1(c)(1); §§IX.A.1(a)-(g)), a POSITA would have been motivated, and found obvious, to configure the *Okada-Odendaal-Kook* system such that the information communicated (§IX.A.1(g)) to include power-related information corresponding to PDA3 (*e.g.*, *Okada*'s device capability/compatibility, charge status), information corresponding to a voltage/current induced by coil 19 at the output of the receiver circuit (§IX.A.1(a)), *e.g.*, output of rectifying circuit 43 (which provides DC signal to charge/power PDA3's battery), and a unique ID (similar to that disclosed/suggested by *Kook*) to facilitate the power transmission/adjustment features/operations in the modified *Okada* system as discussed above. (§IX.A.1(c)-IX.A.1(g); Ex.1002, ¶189.)

A POSITA would have had similar rationale, skills, and expectation of success as that discussed above for the modifications involving *Kook*'s teachings. (*Id.*) Indeed, a POSITA would have appreciated the benefit of obtaining additional information with the device capability/compatibility/charge information (Ex.1005, FIG. 3, ¶¶0060-0090), such as a unique PDA3 ID that is used to recognize/confirm/verify the mobile device to receive power from the charger

system (Ex.1059, ¶¶0046-0047). Such modification(s) would have been within a POSITA's skill and expectation of success, given it would have involved known technologies/techniques (*e.g.*, leveraging *Okada-Kook*'s modified feedback mechanisms/operation for receiving information, including an identifier, for verifying the mobile device and controlling rectifier voltage output for battery charging, like that taught/suggested by *Okada-Odendaal-Kook*. (Ex.1002, ¶189.)

i) operate the first drive circuit according to the power requirement to provide the power from the first primary coil to the receiver coil to power the receiver unit and charge the battery of the portable device,

The *Okada-Odendaal-Kook* combination discloses/suggests this limitation. (Ex.1002, ¶¶190-191.) For reasons discussed for limitation 1(h) and other limitations (§§IX.A.1(b)-(h)), a POSITA would have been motivated, and found obvious, to modify the *Okada-Odendaal-Kook* combination to "**operate**" the modified charger "system" (including the "**first drive circuit**" (§IX.A.1(c)) according to the received "**power requirement**" to inductively power/charge, via coils 19 and 41, PRM40 ("**receiver unit**") and PDA3's battery ("**battery of the portable device**"). (§IX.A.1(h); §§IX.A.1(a)-(g).) Such features would have been consistent with the power transfer operations of *Okada*. (*Id.*; Ex.1005, FIG. 3, ¶¶0060-0077.) (Ex.1002, ¶191.)

j) wherein to charge the battery of the portable device the communication and control circuit is further configured to: receive additional information in the first primary coil corresponding to the voltage or current at the output of the receiver circuit while charging the battery of the portable device;

The *Okada-Odendaal-Kook* combination discloses/suggests this limitation. (Ex.1002, ¶¶192-196.) As discussed, a POSITA would have modified the *Okada-Odendaal-Kook* system such that the communicated information includes information **corresponding to a voltage/current** induced by the first primary coil **at the output of the receiver circuit** (§IX.A.1(h)), where such information would have been detected as modulated signals in primary coil 19 from receiver coil 41 (*Id.*; §§IX.A.1(d), IX.A.1(g); Ex.1002, ¶193.)

Moreover, as explained, *Okada* discloses continuously providing device information after the onset of power transfer operations (receiving "**additional information**" "**while charging the battery of the portable device**"). (Ex.1005, ¶¶0074-0090, FIG. 3 (below); §§IX.A.1(f)-1(i).) (Ex.1002, ¶194.)

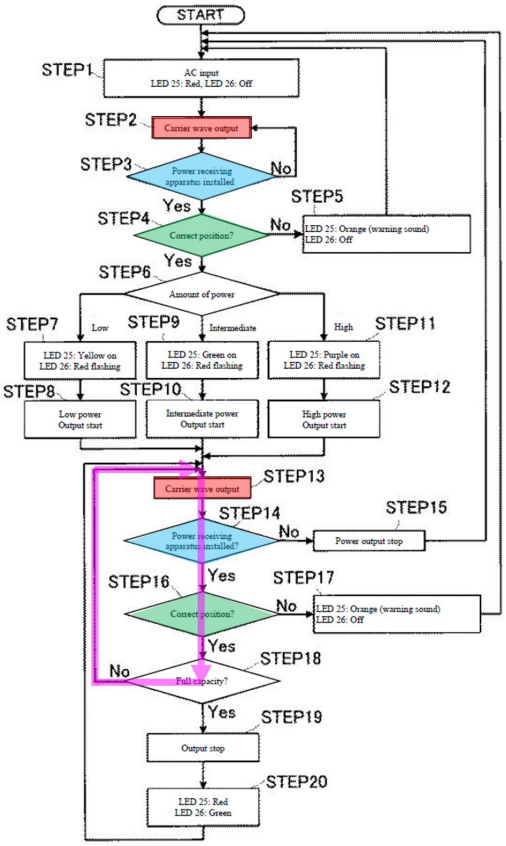

Further, *Kook* explains that upon recognizing the "unique ID" of the battery/device, "a voltage of the secondary rectification terminal in [the battery/device] is controlled to a **constant voltage**" via coils 70/80 by "using an automatic variation algorithm of primary frequency of the non-contact charger 1." (Ex.1059, ¶0047; *id.*, ¶0041 (current sensing block 60 "**stably controlling**" power "through a current feedback using an automatic variation algorithm of primary frequency"); Ex.1002, ¶195.)

Thus, consistent with the above-discussed modified *Okada* system in light of, *inter alia Kook* (§IX.A.1(c)), and for similar reasons, a POSITA would have been

motivated, and found obvious to configure the "**communication/control circuit**" (§IX.A.1(e)) in the *Okada-Odendaal-Kook* system (§§IX.A.1(c)-IX.A.1(i)) to continuously "**receive additional information**" (*e.g.*, information corresponding to a voltage/current induced by coil 19 at the output of the "receiver circuit") "**while charging the battery of the portable device**" in order to "stably control[]" an output voltage to "a constant voltage," thus allowing the charger system to adjust its operation, and thus the transmitted power (similar to that taught/suggested by *Kook* and *Okada* and explained above (§IX.A.1(c)). (Ex.1002, ¶196.)

k) regulate in a closed loop feedback manner the voltage or current at the output of the receiver circuit in accordance with the received additional information corresponding to the voltage or current at the output of the receiver circuit by adjusting at least one of the operating frequency, the duty cycle, and a DC voltage at the DC voltage input of the first drive circuit while charging the battery of the portable device;

The *Okada-Odendaal-Kook* combination discloses/suggests this limitation for reasons explained. (Ex.1002, ¶¶197-198.) As discussed for limitations 1(c)-(j), the *Okada-Odendaal-Kook* system would have been configured to perform a closed loop feedback process (§IX.A.1(c)) to stably control, using current feedback, the portable device's rectification terminal voltage (provided as output of receiver circuit (§IX.A.1(a) used to charge PDA3's battery) ("**regulate in a closed loop feedback manner the voltage or current at the output of the receiver circuit**"). (§§IX.A.1(c)-IX.A.1(j); Ex.1002, ¶198.) For similar reasons explained above, such

features would have been provided in accordance with the current feedback information continuously received during operation ("**the received additional information corresponding to the voltage or current at the output of the receiver circuit**") (§§IX.A.1(j)) by varying the operating frequency of the primary-side circuit (via, *inter alia*, modified switching circuit 15 (part of "**first drive circuit**")) (§IX.A.1(c)) while transferring power to charge PDA3's battery (§§IX.A.1(e)-IX.A.1(l)) ("**adjusting *at least one of* the operating frequency…while charging the battery of the portable device**"). (§§IX.A.1(a)-(c); Ex.1002, ¶198.)

l) monitor for continued presence of the portable device and completion of the charging of the battery of the portable device detected by the communication and control circuit through the first sense circuit; and

The *Okada-Odendaal-Kook* combination discloses/suggests this limitation. (Ex.1002, ¶¶199-201.)

As explained, *Okada* discloses "[e]ven after power transmission has begun," device information is periodically/continuously transmitted from PRM40 to PTM10 in response to the periodic/continuous transmission of the carrier wave by circuit 33. (§§IX.A.1(e)-(k); Ex.1005, ¶¶0074-0077, FIG. 3 (below); Ex.1002, ¶200.)

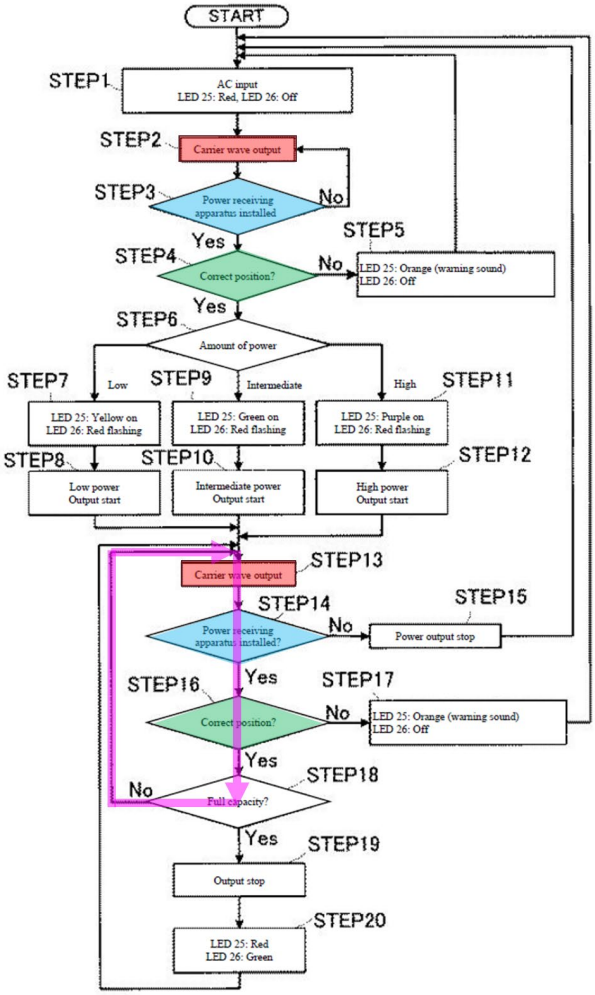

Based on the information received/detected **through** demodulator 35 ("**first sense circuit**") and provided from PRM40's circuit 47, circuit 36 determines whether PDA3 is properly positioned on cradle 4 (Ex.1005, ¶¶0074-0075) and circuit 38 determines whether PDA3 is fully charged (*id.*, ¶0076), where circuits 36/38 are part of the "**communication and control circuit**" (§IX.A.1(e)) ("**monitor for continued presence of the portable device and completion of the charging of the battery**"). (Ex.1005, ¶¶0074-0090.) For reasons explained, the *Okada-Odendaal-Kook* system, would have been configured to perform similar features in

similar fashion, like that recited in limitation 1(l). (§§IX.A.1(a)-IX.A.1(k); Ex.1002, ¶201.)

m) if the portable device is no longer present or charging is complete, stop operation of the first drive circuit for the provision of power inductively to the portable device.

The *Okada-Odendaal-Kook* combination discloses/suggests this limitation. (Ex.1002, ¶¶202-203.)

Okada discloses that if circuit 36 determines whether a "capable" device "has been removed" from cradle 4 and/or not properly positioned, then "the power switching circuit 24 controls all of the transistors [21/22/23]…into an OFF state and stops power transmission." (Ex.1005, ¶¶0074-0075, FIG. 3). Likewise, circuit 38 determines whether "a charged state of the PDA 3 is at full capacity," and if so, "the power switching circuit 24 controls all of the transistors [21-23] into an OFF state, ends power output." (*Id.*, ¶0076, FIG. 3.) (Ex.1002, ¶203.) Thus, consistent with that disclosed in *Okada* and for reasons explained, the "**communication and control circuit**" (§IX.A.1(e) (*e.g.*, circuits 36, 38), §IX.A.1(j)) in the *Okada-Odendaal-Kook* system would have likewise been configured to "**stop operation of the first drive circuit**" (§IX.A.1(c) for **inductive power transfer to PDA3**, upon determination PDA3 was removed or its battery is fully charged ("**device is no longer present or charging is complete**"). (§§IX.A.1(c)-(m); Ex.1002, ¶203.)

2. Claim 6

a) The system of claim 1 wherein: the DC voltage input is configured to couple to and receive a DC voltage from a DC power supply via a universal serial bus (USB) power supply; and the system is further configured to communicate with the DC power supply via the USB.

Okada-Odendaal-Kook discloses/suggests this limitation. (Ex.1002, ¶¶204-212; §IX.A.1.)

As explained, *Okada* discloses cradle 4 has a "**DC voltage input**" (§IX.A.1(c)(1)) (associated with circuits 13/14) connecting cradle 4 to a PC2 via "wire (line 8)." (Ex.1005, FIG. 1 (below), ¶¶0034, 0036.)

FIG. 1

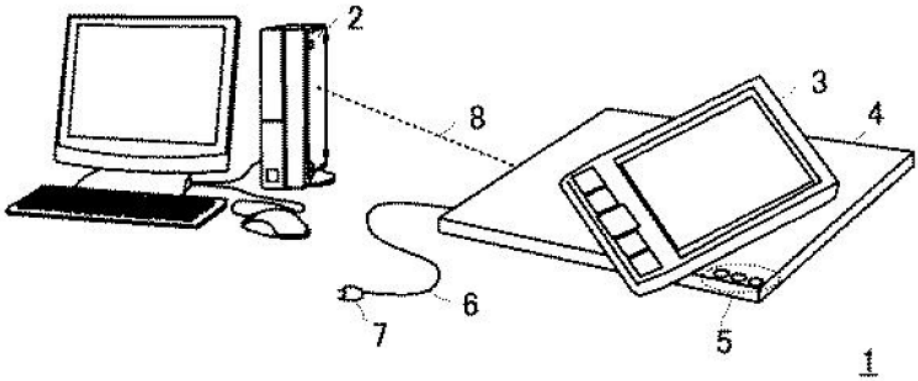

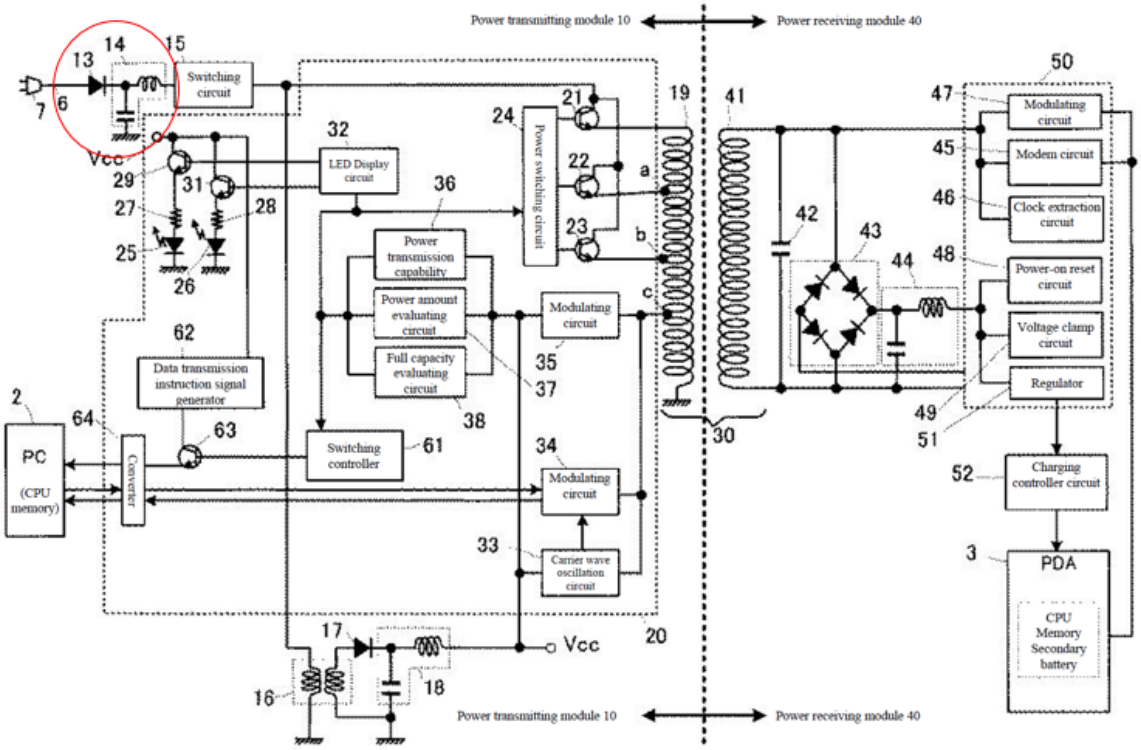
Power transmitting module 10
Power receiving module 40
Switching circuit
LED Display circuit
Power switching circuit
Power transmission capability
Power amount evaluating circuit
Full capacity evaluating circuit
Modulating circuit
Data transmission instruction signal generator
Switching controller
Carrier wave oscillation circuit
PC
(CPU memory)
Converter
Modulating circuit
Modem circuit
Clock extraction circuit
Power-on reset circuit
Voltage clamp circuit
Regulator
Charging controller circuit
PDA
CPU
Memory
Secondary battery
Vcc

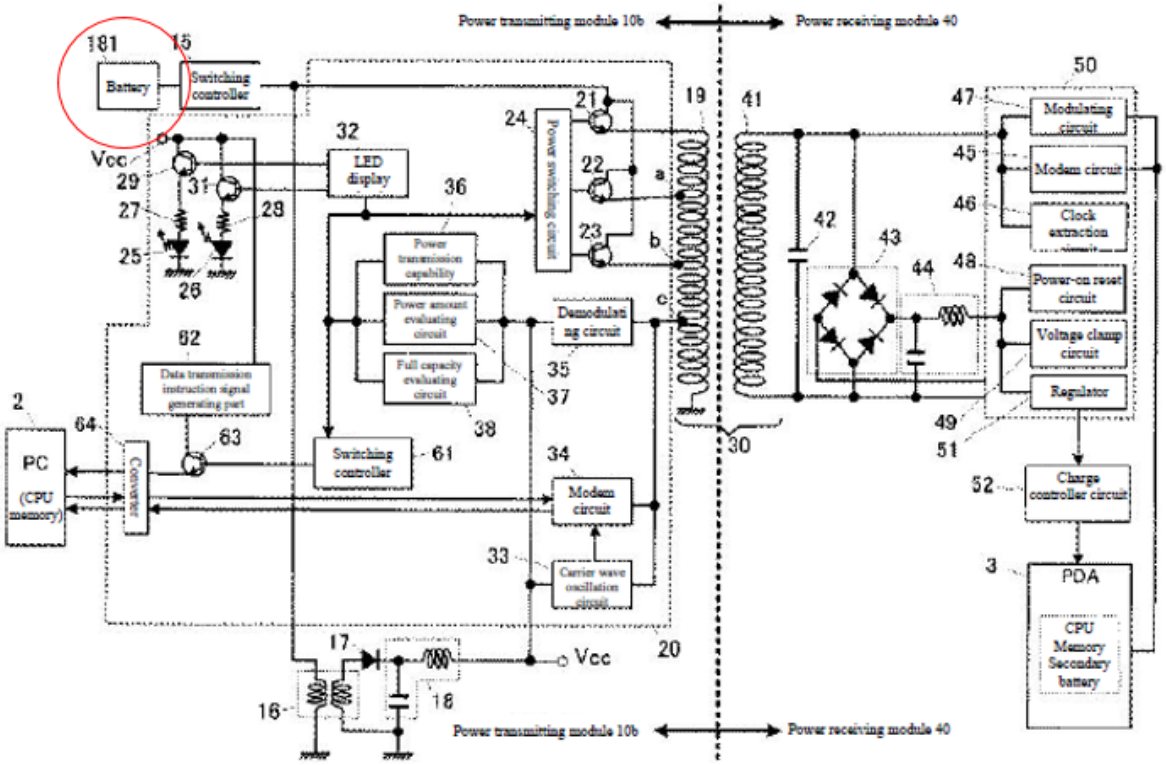
Power transmitting module 10b
Power receiving module 40
Battery
Switching controller
LED display
Power switching circuit
Power transmission capability
Power amount evaluating circuit
Full capacity evaluating circuit
Demodulating circuit
Data transmission instruction signal generating part
Switching controller
Modem circuit
Carrier wave oscillation circuit
PC
(CPU memory)
Converter
Modulating circuit
Modem circuit
Clock extraction
Power-on reset circuit
Voltage clamp circuit
Regulator
Charge controller circuit
PDA
CPU
Memory
Secondary battery
Vcc

Cradle 4 (and PTM10) communicates with PC2. (*Id.*, ¶¶0042-0044, 0078-0079, 0088-0089, FIG. 14(a)-(b), ¶0136-0137.) Cradle 4 and PC 2 may each include a "connection interface" where connection/communication occurs via "the same cable." (*Id.*, ¶0079.) However, *Okada* does not expressly disclose use of known USB power/data communications. Nonetheless, in light of *Kook*, it would have been obvious to implement such features in the *Okada-Odendaal-Kook* charger system so that cradle 4 is able to receive power and communicate data over a common interface/bus that was known to provide such dual functionalities (e.g., USB). (Ex.1002, ¶¶205-206.)

Kook discloses that charger 1 has a USB connector 10 (**yellow** below) connected to a USB port/bus (USB power supply) of computer 100 (a DC power supply) to receive a DC voltage, *e.g.*, 5V (*e.g.*, receives a DC voltage via a USB), which is used to power/charge device 300/battery 200. (Ex.1059, FIGS. 1, 4 (below), ¶¶0008, 0017, 0023, 0033, 0042, 0044, 0055 ("charger 1…may be charged…using a USB port"), 0061.) (Ex.1002, ¶207.)

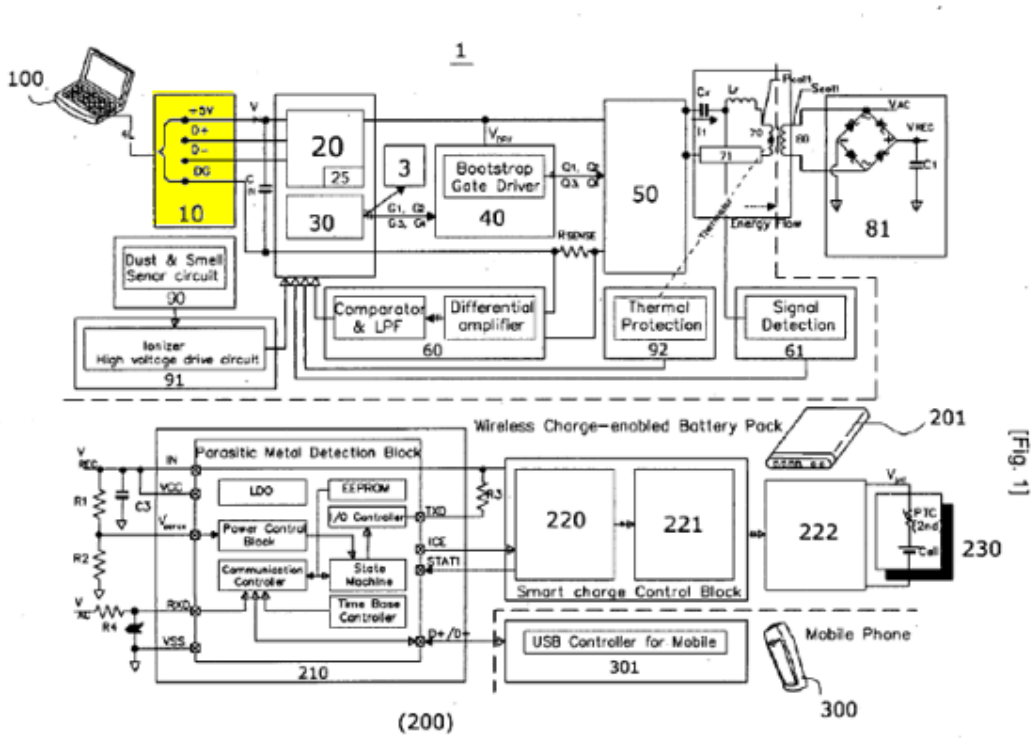

Standard 24PIN Socket	USB Connector	Cigar Socket
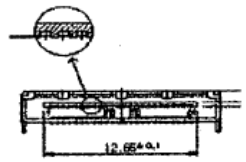	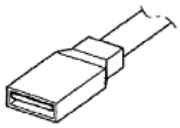	

Charger 1 communicates via the USB port/bus with computer 100, *e.g.*, to receive music/data and provide it to the mobile device. (*Id.*, ¶0042; *id.*, ¶¶0008, 0032 (MPU30 coupled to USB 10), 0038 ("USB communication makes it possible" for both "data communication" and "charging power" between computer 100 and charger 1), 0039, 0041; Ex.1002, ¶208.)

In light of such teachings/suggestions, a POSITA would have been motivated and found obvious to configure "system" to employ known USB technologies/techniques to transfer power to the "**DC voltage input**" of the "**first drive circuit**" (§IX.A.1(c)) and communicate data to the "**system**" because it would have enhanced the charger's versatility by using a single interface/port/cable to receive both DC power and data communications with PC 2 ("**DC power supply**"), consistent with the teachings of *Kook* and *Okada*. (Ex.1002, ¶209.)

A POSITA would have been motivated to design/implement such a modification since it would have enabled cradle 4 to receive DC power (DC voltage input) from alternative sources, *e.g.*, a computer's USB port (PC 2 ("**DC power supply**")), allowing additional flexibility and conveniences when using cradle 4 to power/charge a mobile device, consistent with *Okada* that contemplates alternative power sources to drive cradle 4. (Ex.1002, ¶210; Ex.1005, ¶¶0148-0149.) Moreover, it would have also allowed cradle 4 (including circuits 36/37/38 and other components) to perform data communications with PC 2 (*e.g.*, to facilitate communications between PDA3 and PC 2 via cradle 4 (Ex.1005, ¶¶0034-0036, 0044, 0078-0079, FIG. 6)) also **through the same USB connection/port**, enhancing versatility in the various applications of PTM10 and providing alternative power/data input connections/wires (*e.g.,* reduce cables for communicating data and

receiving power via USB connection), consistent with the teachings of *Okada* and *Kook*. (Ex.1002, ¶210.)

A POSITA would have been motivated to connect cradle 4 (PTM10) to PC 2 ("**DC power supply**") via the USB connection such that the "**communication and control circuit**" (§IX.A.1(e)) can communicate with PC 2 ("**DC power supply**") via the USB connection for similar reasons. (Ex.1002, ¶211.) As explained, the disclosed "**system**," including communications/control circuit in *Okada* (including as modified) can include circuits 36-38 and circuit(s) 61/62/63/64, which receives signal(s) from PC 2 and transmits an instruction signal in a "format that the PC 2 can read" to enable PC 2 to "recognize[] that a device capable of transmitting and receiving data is mounted" on cradle 4 and "that data transmission and reception preparation is completed" and "data to be transmitted" to PDA3 is "transmitted to converter 64." (Ex.1005, ¶¶0083-0085, *id.*, ¶¶0078-90.) Configuring the modified *Okada* system (§IX.A.1) to leverage the same USB connection to communicate data and receive DC power would have been an obvious implementation of conventional technologies (*Kook*) with foreseeable benefits (e.g., reduced cables, compatibility enhancements, etc.) (Ex.1002, ¶211.)

A POSITA would have had the skill and rationale in implementing, and reasonable expectation of success in achieving, such modification. Especially in light of the teachings of *Okada-Kook* and state-of-art knowledge of conventional

USB communications that would have been employed to predictably yield an inductive power/charging system that receives/communicates DC power/data from/with PC 2 in the modified *Okada-Odendaal-Kook* system. (*Id.*, ¶212; §IX.A.1.) *KSR* at 416-18.

3. Claim 9

a) The system of claim 1, wherein the communication and control circuit is further configured to detect presence of the portable device by periodically operating the first drive circuit for a period of time, wherein the period of time is sufficient to activate and power the receiver unit in the portable device and to receive at least part of the received communication of information.

Okada-Odendaal-Kook discloses/suggests this limitation. (Ex.1002, ¶¶213-216; §IX.A.1.)

As discussed, circuit 36 (part of "**communication and control circuit**") determines whether PDA3 is properly positioned/aligned on cradle 4 ("**configured to detect presence of the portable device**"). (Ex.1005, ¶¶0074-0075; IX.A.1(m).) Such a determination of PDA3's "**presence**" is based on circuit 33 "**periodically**" transmitting a carrier wave, resulting in the feedback of device information used to detect/determine a properly positioned/aligned PDA3/coil 41. (Ex.1002, ¶214.)

As discussed, switching signal from circuit 15 ("**first drive circuit**") is converted to a V_{CC} to power circuit 33, which **periodically** generates a carrier wave sent to PRM40, which is used to **activate/power** the PRM40 ("**receiver unit in the**

portable device"). (Ex.1005, ¶¶0039, 0056-0058; §IX.A.1(c)(3).) Even during power transmission, the carrier wave is periodically transmitted to PRM40, and, based on the received device information, PTM10 (including the disclosed "**communication and control circuit**") determines whether PDA3 remains and/or is properly aligned. (Ex.1005, FIG. 3, ¶¶0074-0075; §IX.A.1(c)(3).) Only when properly aligned does PDA3 receive power until fully charged, which is determined using the "periodically transmitted" carrier wave. (Ex.1005, FIG. 3, ¶0074, 0076; §IX.A.1(c)(3); Ex.1002, ¶¶215-216.)

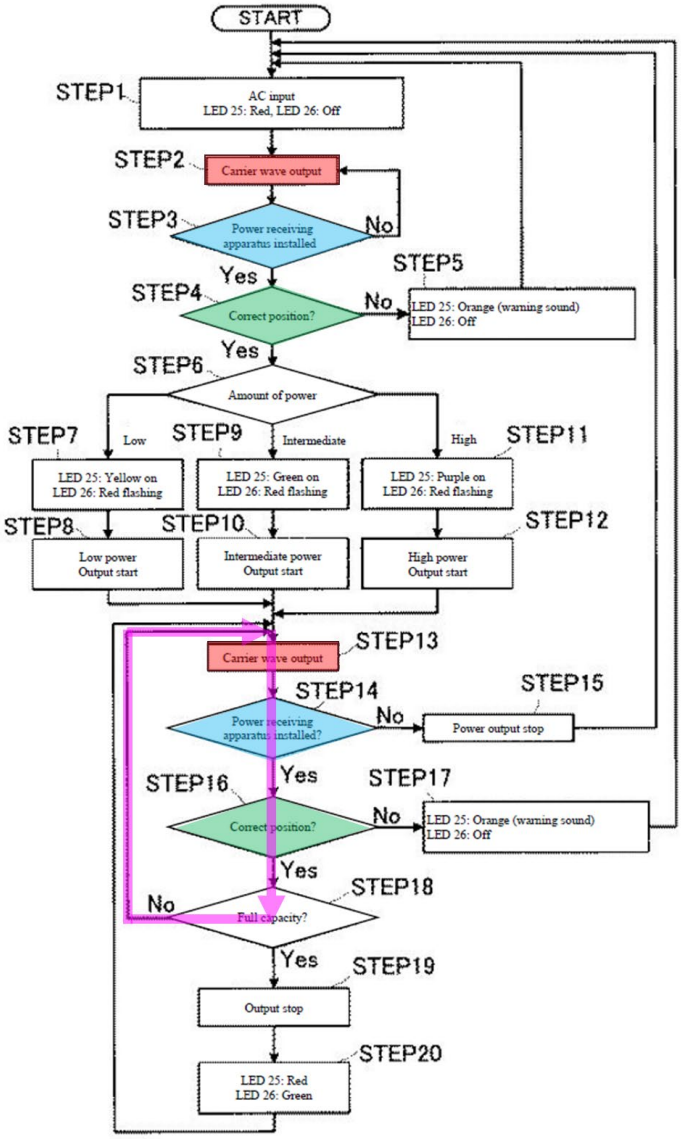

A POSITA would have thus understood PDA3 has to be properly placed/aligned for at least a **sufficient period of time** to allow the periodic carrier wave to **activate/power** the PRM40 and receive responsive device information in order to facilitate powering/charging of the device, like that claimed. Consequently, and consistent with such operations, the "**communication and control circuit**" in the modified *Okada* system would have been "**configured to detect presence of the**

portable device by periodically operating the first drive circuit for [such sufficient] **period of time**," as claimed. (Ex.1002, ¶216.)

B. Ground 2: Claim 10 is obvious over *Okada*, *Odendaal*, *Kook*, *Symons*, *Shima*, and *Hui-027*

1. Claim 10

a) The system of claim 1, further comprising a near field communication (NFC) antenna for communication of data, and further wherein:

Okada-Odendaal-Kook in view of *Symons* discloses/suggests this limitation. (Ex.1002, ¶¶217-221; §IX.A.1.) While *Okada-Odendaal-Kook* does not expressly disclose an NFC antenna as claimed, a POSITA would have found it obvious to implement such features in view of *Symons*.

Symons, like *Okada-Odendaal-Kook*, discloses an inductive power/signal transfer system using primary and secondary coils (Ex.1070, Abstract, ¶¶0006-0008, 0018-0025, 0028, 0031-0033, 0047-0049; FIGS. 1-3) and thus is similarly in the same technical field as the '942 patent. (§IX.A.1; Ex.1001, Abstract.) Likewise, *Symons* discloses features reasonably pertinent to particular problem(s) the '942 patent inventor and a POSITA was trying to solve. (*Id.*; Ex.1070, Abstract, ¶¶0006-0008, 0018-0025, 0028; Ex.1001, 11:66-12:4, 39:52-64, FIG. 1.) Therefore, a POSITA had reasons to consider/consult *Symons* when looking to design/implement the *Okada-Odendaal-Kook* system discussed above. (Ex.1002, ¶218.)

Symons discloses a "portable computer 2" that "provide[s] power to the mobile telephone 1 whenever the mobile telephone battery requires charging." (Ex.1070, ¶0028, FIG. 1 (below); §IX.A.1.) Portable computer 2 (operating as an inductive charger (*e.g.,* "system")) comprises a "NFC communicator … 30," which "comprises … an antenna … 33." (*Id.*, ¶0023; Ex.1002, ¶¶101-102, 219.) *Symons* explains the well-known use of NFC communication (and its requirement of an "antenna") for many applications. (*Id.*; Ex.1070, ¶¶0002-0006.)

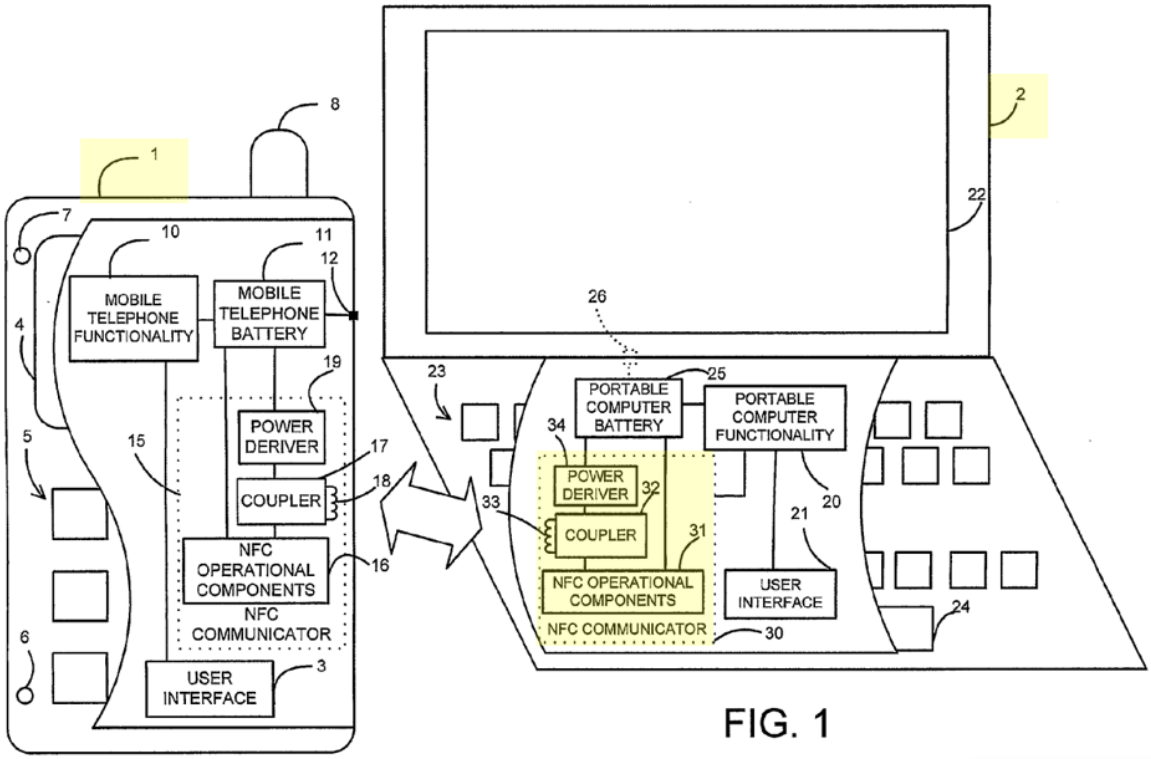

FIG. 1

A POSITA would have been motivated and found obvious to configure the "system" (§IX.A.1(a)) of modified *Okada* to implement known NFC technologies/functionalities in mobile device configurations (including an antenna),

similar to that taught by *Symons*. Such modification would have predictably enhanced/complemented the modified *Okada* system with additional functionalities for communicating information consistent with known features (*e.g.*, NFC technologies/components) to be implemented in charger system and mobile device implementations (like that taught by *Okada* and *Symons*) (*e.g.*, data transfer, authentication, transaction-based applications, etc.). (Ex.1002, ¶220; Ex.1062, FIG. 1, ¶¶0022-0026, 0185.) Indeed, given *Okada* contemplates a wide range of applications/configurations involving power transfer for a mobile device (e.g., PDA) (§IX.A.1(a)), and the well-known use and benefits of NFC technology at the time (Ex.1070, ¶¶0002-0006), a POSITA would have appreciated the benefits of implementing NFC communications (with an antenna) (as known in the art) with the charger system so it could facilitate near-field communications to perform operations consistent with such applications, including transaction-based features (Ex.1062). Thus, such an implementation would have enhanced conveniences and security of such device communications involving mobile devices (like the PDA of *Okada*) (*e.g.*, charging during large amount of transfer data). (*Id.*; Ex.1070, ¶0072.) (Ex.1002, ¶220.)

A POSITA would have had the skill and rationale in implementing, and reasonable expectation of success in achieving, such modification. (Ex.1002, ¶221.) Especially given it was known to employ NFC chip(s)/components with charger

device circuitry to provide the benefits of such near-field communications (*e.g.,* POS transactions, etc.) (*Supra*.) Thus, such modification would have involved applying known technologies/techniques (*e.g.,* known use of NFC antenna/circuitry) to yield the predictable result of providing a charger "system" that is capable of providing conventional features, such as NFC-based communications, consistent with that discussed by *Symons* and known in the art. (Ex.1002, ¶221.) *KSR* at 416-18.

b) the first primary coil is formed in a flexible Printed Circuit Board (PCB) and has an inductance in a range of 1 microhenry to 100 microhenries;

c) the PCB coil comprises multiple metallic layers of substantially spiral-shaped patterns comprising copper connected by vias wherein each layer comprises 1 to 4 ounce (oz) copper thickness material; and

Okada-Odendaal-Kook in view of *Shima*, and *Hui-027* discloses/suggests limitations 10(b)-10(c). (Ex.1002, ¶¶222-238.)

Odendaal discloses the primary coil may be "a set of **spiral coils**…with each spiral being a conductor trace **on a separate substrate**, such as **flex** or **printed circuit board**" (Ex.1008, 2:19-28, 3:41-48 (multi-layer coils)) and that "number of turns of spirals" may be adjusted (*id.*, 6:59-64) ("**the first primary coil is formed in a flexible Printed Circuit Board (PCB),**" where "**the PCB coil comprises multiple…layers of substantially spiral-shaped patterns**"). In addition to reasons discussed above for modifying *Okada* in view of *Odendaal*, a POSITA would have

been motivated and found obvious to include these features, *e.g.*, a primary coil made of a flexible PCB having a set of multi-layer spiral-shaped coils/patterns, when implementing the *Okada-Odendaal* system. It would have allowed forming flexible coils/substrate to be used in charger systems having different surfaces (*e.g.,* either rigid or flexible). (Ex.1002, ¶¶223-224; Ex.1008, 2:30-44 (disclosing a charger surface being a fabric).) Moreover, multi-layer spiral-shaped coils are known to increase the generated magnetic field. (Ex.1002, ¶224; Ex.1008, 3:41-48.)

A POSITA would have had the skills and rationale in light of the teachings/suggestions of *Okada-Odendaal*, and state-of-art knowledge, to implement the above-modification while considering design tradeoffs and techniques/technologies with a reasonable expectation of success. Especially given such modification would have involved known technologies/techniques (*e.g.*, flexible PCB having a set of multi-layer spiral-shaped coils) to yield the predictable result of expanding/complementing applications of an inductive powering/charging system, like that contemplated by *Okada-Odendaal*. (Ex.1002, ¶225; §IX.A.1(a).) *See KSR* at 416-18.

Moreover, to the extent the *Okada-Odendaal* combination does not expressly disclose that the multi-layer spiral-shaped flexible PCB primary coil, where the layers are "**connected by vias**," a POSITA would have found it obvious to do so

given that was a common design for interconnecting multi-layer PCB circuit arrangements, as exemplified by *Shima*. (Ex.1002, ¶225.)

Shima, like *Okada-Odendaal*, discloses an inductive power/signal transfer system using primary and secondary coils (Ex.1032, Abstract, 1:42-50, 2:12-4:10, 5:62-6:53, 7:17-8:38), and thus is similarly in the same technical field as the '942 patent. (§IX.A.1; Ex.1001, Abstract.) Likewise, *Shima* discloses features reasonably pertinent to particular problem(s) the '942 patent inventor and a POSITA was trying to solve. (*Id.*; Ex.1001, Abstract, 13:47-52.) Therefore, a POSITA had reasons to consider/consult *Shima* when looking to design/implement the above-discussed *Okada-Odendaal* system. (Ex.1002, ¶¶89-91, 226.)

Shima discloses coils having similar spiral patterns that reside on different layers of PCBs, where the coil patterns are connected by through-holes ("vias"). For example, FIG. 3A (below) is described having "a plurality of thin printed-circuit substrates 30-1 to 30-n having similar coil patterns 32-1 to 32-n." (Ex.1032, 5:62-6:1, FIGS. 3D-3E (below), 6:13-35.) Starting and terminating ends of the coil patterns are connected using **through-holes 33 and 34** respectively.[10] (*Id.*, 6:4-21.) Layers of loop patterns (*e.g.*, 37-1 to 37-n (FIG. 5A (below)) may also "have the respective through-holes [39] connected in such a way that a spiral coil is formed in

[10] Such through-holes are consistent with vias as known in the art. (Ex.1002, ¶227.)

the direction in which the printed-circuit substrates 30-1 to 30-n are stacked." (*Id.*, 7:17-35.) (Ex.1002, ¶227.)

FIG. 3A

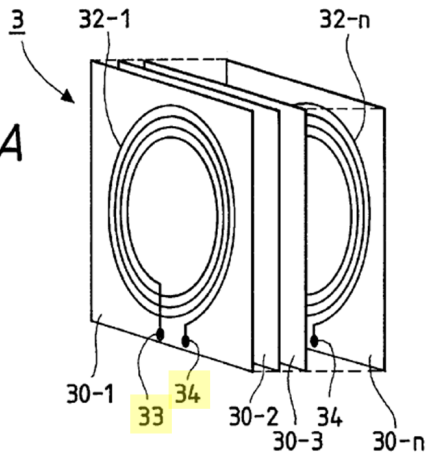

FIG. 5A

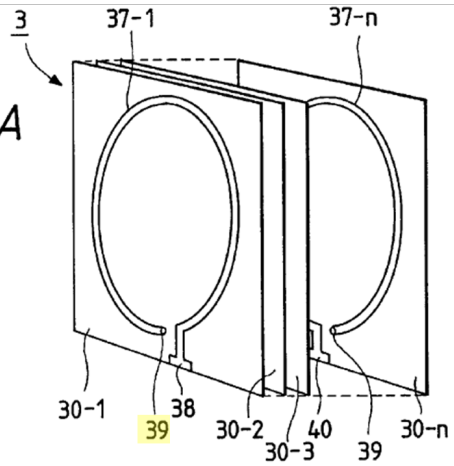

FIG. 3D

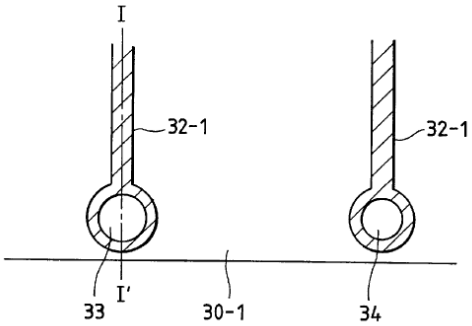

FIG. 3E

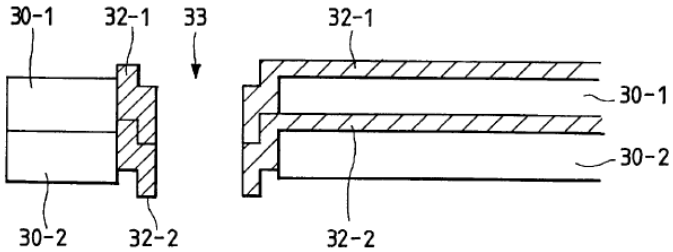

In view of *Shima* and *Odendaal*, a POSITA would have been motivated and found obvious to configure/implement the primary coils in the *Okada-Odendaal* system (§IX.A.1; *supra*) as a multi-layer/stacked flexible PCB-planar coil having spiral-shaped coil layers that are interconnected by vias to allow the coils to maintain continuity while providing a compact coil configuration with enhanced efficiency and reduced conductor resistance as suggested by *Shima*. (Ex.1002, ¶228; Ex.1032,

6:47-53, 7:41-44, 8:28-33.) A POSITA would have appreciated the versatility in applications taught by *Okada* (§IX.A.1(a)) and known stacked PCB coil designs and ways to interconnect them (vias) (*Shima/Odendaal*), and thus been motivated to design/implement various system designs that were consistent with such applications, including thin form factor configurations. (*Supra*; Ex.1002, ¶228.)

A POSITA would have had the skill and rationale in implementing, and reasonable expectation of success in achieving, such a modification, especially since it was known to use vias to connect multi-layered coil patterns. (Ex.1045, ¶0026, FIGS. 3A-C; Ex.1032 (*supra*).) Thus, such modification would have involved applying known technologies/techniques to yield the predictable result of providing a charger with multi-layer flexible PCB primary coils that would have performed power/signal communications consistent with that discussed above for the *Okada-Odendaal* system. (Ex.1002, ¶229; §IX.A.1.) *KSR* at 416-18.

While *Okada-Odendaal-Shima* discloses/suggests the above-discussed primary coil features, the combination does not expressly disclose that the multi-layer coil has "each layer compris[ing] 1 to 4 ounce (oz) copper thickness material." Nevertheless, a POSITA would have found it obvious to implement such a feature given that copper PCB-coils were well-known and thickness thereof was commonly designed within that range, as exemplified by *Hui-027*. (Ex.1002, ¶230.)

Hui-027, like *Okada-Odendaal-Shima*, discloses an inductive power/signal transfer system using primary and secondary coils. (Ex.1068, Abstract, ¶¶0001-0004, 0030-0033, 0039-0042, 0065, 0067, Table I, FIGS. 1, 2, 3a-3b), and thus is similarly in the same technical field as the '942 patent. (§IX.A.1(a); Ex.1001, Abstract.) Likewise, *Hui-027* discloses features reasonably pertinent to particular problem(s) the '942 patent inventor and a POSITA were trying to solve. (*Id.*; Ex.1001, Abstract, 13:47-52.) Therefore, a POSITA had reasons to consider/consult *Hui-027* when looking to design/implement the *Okada-Odendaal-Shima* inductive charging system discussed above. (Ex.1002, ¶231.)

Hui-027 discloses PCB coils made of copper of certain thickness. For instance, Table I (below) shows that the PCB coils of FIGS. 3a and 3b (below) have a "Copper Track Thickness" of "70 µm (**2 Oz/ft^2**)" and FIG. 3b illustrates that the "Conductor **Thickness**" corresponds to that of the primary winding. (Ex.1068, ¶¶0004, 0030, FIGS. 3a and 3b.) (Ex.1002, ¶¶98-100, 232.)

TABLE I

Geometric Parameters of the PCB Transformer

Geometric Parameter	Dimension
Copper Track Width	0.25 mm
Copper Track Separation	1 mm
Copper Track Thickness	70 μm (2 Oz/ft^2)
Number of Primary Turns	10
Number of Secondary Turns	10
Dimensions of Ferrite Plates	25 mm × 25 mm × 0.4 mm
PCB Laminate Thickness	0.4 mm
Insulating Layer Thickness	0.228 mm
Transformer Radius	23.5 mm

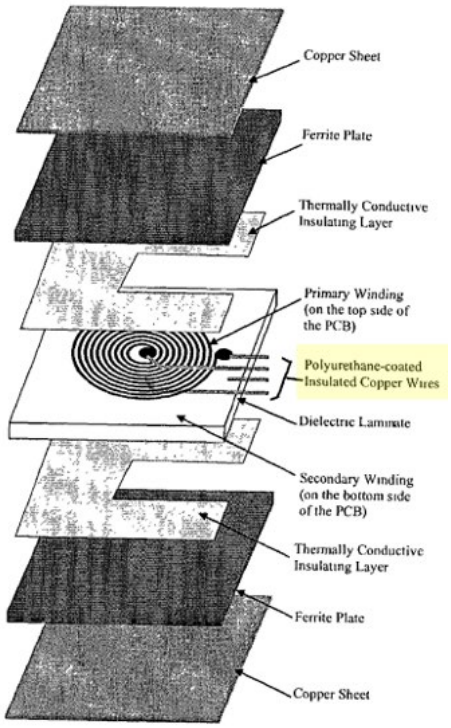

Fig. 3a.

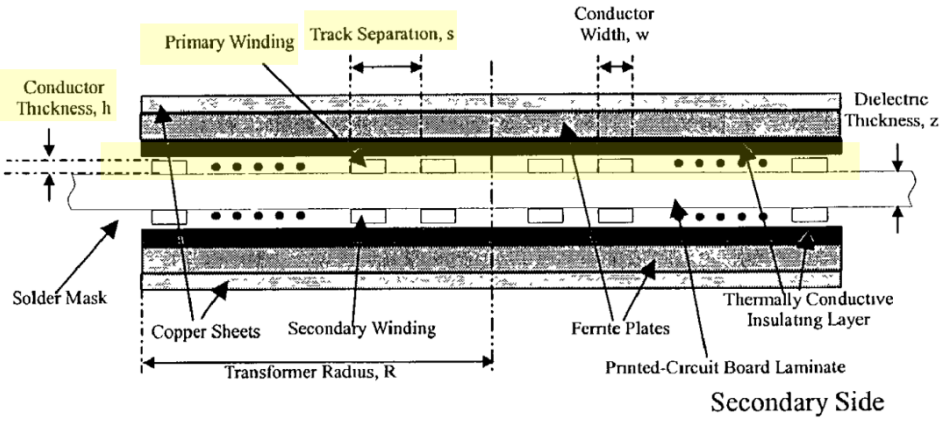

Fig. 3b.

In view of *Hui-027*, a POSITA would have been motivated and found obvious to configure/implement the primary coil in the *Okada-Odendaal-Shima* system (*supra*) as a multi-layer flexible PCB copper coil with each layer having a thickness of a few ounces, including 1 to 4 ounces as suggested by *Hui-027*, especially when the *Okada-Odendaal*, while disclosing use of PCB coils, does not provide specifics regarding type of coil material and its thickness. (Ex.1002, ¶233.) Indeed, the '942 patent acknowledges that "[m]ost common PCBs use 1-2 oz copper PCBs." (Ex.1001, 24:38-39.)

Moreover, using a multi-layer coil having "**1 to 4 ounce copper thickness for each layer**" would have been a matter of routine optimization of a result-effective variable (the thickness of copper, which may affect electrical conductivity/weight of the coil), well within a POSITA's grasp and technical ability, as acknowledged by the '942 patent. (Ex.1002, ¶234.) *See E.I. DuPont de Nemours & Co. v. Synvina C.V.*, 904 F.3d 996, 1010 (Fed. Cir. 2018) ("[D]iscovery of an

optimum value of a result effective variable in a known process is ordinarily within the skill of the art.") (quoting *In re Boesch*, 617 F.2d 272, 276 (CCPA 1980)).

Additionally, a POSITA would have had the skill and rationale in implementing, and reasonable expectation of success in achieving, such a modification. Especially since it was known to use a multi-layer coil having a thickness of a few ounces, *e.g.*, 2 oz. (Ex.1068, Table 1; Ex.1001, 24:38-39.) Thus, such a modification would have involved applying known technologies/techniques to yield the predictable result of providing a charger with a (primary) copper coil having a certain thickness, *e.g.*, 2 oz, that would have performed power/signal communications consistent with that discussed above for the *Okada-Odendaal-Shima-Hui-027* system. (Ex.1002, ¶235.) *KSR* at 416-18.

Likewise, using a multi-layer coil having "**an inductance in a range of 1 microhenry to 100 microhenries**" would have been a matter of routine optimization of a result-effective variable (the coil inductance, which may affect flux density and coupling efficiency of the charging system), well within a POSITA's grasp and technical ability. (Ex.1002, ¶236; Ex.1079, FIGS. 1, 7, 3:35-4:19, 9:35-49 ("inductance of [receiving/transmitting] coil L1' is between 10 to 100 microhenries").) *E.I. DuPont de Nemours*, 904 F.3d 1010. A POSITA appreciated that selecting/designing coil dimensions/turns/etc. to achieve desired inductance(s) for particular applications of an inductive power transfer system (like those

contemplated by *Okada*) was as a matter of common design practice. (Ex.1002, ¶236; Ex.1001, 30:18-22, 34:61-35.)

A POSITA would have had the skill and rationale in implementing, and reasonable expectation of success in achieving, such a modification. Such a modification would have involved applying known technologies/techniques to yield the predictable result of providing a charger with a (primary) copper coil having a certain inductance, *e.g.*, 1-100 microhenries, that would have performed power/signal communications consistent with that discussed above for the *Okada-Odendaal-Shima-Hui-027* system. *KSR* at 416-18. Indeed, such a POSITA would have had sufficient reason to design, consider, and implement various types of primary coil configurations/materials to achieve desired operation/performance based on the various application of the charger systems contemplated by *Okada*. (Ex.1002, ¶¶237-238; §IX.A.1(a).)

d) the operating frequency is within a range of 100 kHz to 1 MHz.

Okada-Odendaal-Kook-Symons-Shima-Hui-027 discloses/suggests this limitation. (Ex.1002, ¶¶239-245.) As discussed, the modified *Okada-Odendaal-Kook* system would have been configured to drive the primary coil at an "**operating frequency**." (§IX.A.1(c); Ex.1002, ¶¶239-241.) Moreover, upon considering the teachings of *Shima* for reasons explained above, a POSITA would have recognized that *Shima* discloses that it was known to drive a primary coil at "the operating

frequency…typically on the **low order of several hundred kHz**." (Ex.1032, 1:33-48; *id.*, 1:63 ("antenna coils").) Thus, in view of *Shima* in context of a POSITA's state-of-art knowledge, a POSITA would have been motivated and found obvious to configure the disclosed "system" in the above-modified *Okada* combination to operate in the hundreds of kHz range (100 kHz to 1MHz) to accommodate desired operations in accordance with the various applications contemplated by *Okada*. (Ex.1002, ¶¶240-242; §IX.A.1(a).)

Operating a charging system at "a range of 100 kHz to 1 MHz" would have been a matter of routine optimization of a result-effective variable (the operating frequency of the charging system, which may affect power transmission efficiency, harmonics/noise reduction/generation, skin effects), well within a POSITA's knowledge and technical ability. (Ex.1002, ¶243; Ex.1032, 2:50 ("skin effect of high-frequency currents substantially increases the conductor resistance R."); Ex.1001, 55:33-39.) *See E.I. DuPont de Nemours & Co. v. Synvina C.V.*, 904 F.3d 996, 1010 (Fed. Cir. 2018) ("[D]iscovery of an optimum value of a result effective variable in a known process is ordinarily within the skill of the art.") (quoting *In re Boesch*, 617 F.2d 272, 276 (CCPA 1980)). A POSITA would have looked to apply electrical current to coil 19 at a certain operating frequency to maintain Q sharpness and radiation efficiency of the coil as suggested by *Shima*

(Ex.1032, 2:24-59), and thus been motivated to implement the above modification. (Ex.1002, ¶244.)

A POSITA would have had the skill and rationale in implementing, and reasonable expectation of success in achieving, such a modification. Especially since it was known to operate a drive circuit of a wireless power transfer system at the range of hundreds of kHz. (Ex.1032, 1:33-48.) Thus, such a modification would have involved applying known technologies/techniques (*e.g.*, operating a drive circuit in a frequency range of hundreds of kHz (*Shima*)) to yield the predictable result of an inductive power/charging system that effectively transfers power at a given operating frequency range according to given applications. (Ex.1002, ¶245.) *KSR* at 416-18.

C. Ground 3: Claim 13 is unpatentable under § 103(a) as being obvious over *Okada*, *Odendaal*, *Kook*, and *Symons*

1. Claim 13

a) The system of claim 1, wherein the first primary coil includes a magnetic core of ferromagnetic material within a central area of the first primary coil and the system further comprises a Near Field Communication (NFC) antenna and circuitry for communication of data.

The *Okada-Odendaal-Kook-Symons* combination discloses/suggests this limitation. (Ex.1002, ¶¶246-249.)

Consistent with the combined teachings based on *Odendaal* and the state-of-art (§IX.A.1(c)), *Kook* describes use of primary coil that can be "composed of any one of FPCB, PCB, coil and **ferrite core**…and formed in a flat or cylindrical shape of a circle, tetragon, or polygon to facilitate the signal transmission." (Ex.1059, ¶0076; *id.*, ¶¶0009, 0012, 0033, 0041-0042.) In light of such teachings/suggestions (*Odendaal-Kook* in context of a POSITA's state-of-art knowledge (§IX.A.1(c)), it would have been obvious to configure the modified planar primary coil 19 in the modified *Okada* system to have a central ferrite core/area ("**a magnetic core of ferromagnetic material within a central area of the first primary coil**") in order to improve the charging efficiency, as was known in the art. (Ex.1002, ¶247; Ex.1061, 18:20-24 ("by tailoring a thickness of a desired ferrite and a thickness and a width of a wire, a charging device having a high charging efficiency can be obtained without increasing a volume and a weight of a portable device.").)

A POSITA would have had the skill, knowledge, and rationale in implementing, and expectation of success in achieving, the above-modification, especially given the use/benefits of a ferrite core/material in planar coils was known. (Ex.1002, ¶248; Ex.1059, ¶0009; Ex.1061, 17:10-23:13 (ferrite material/core for inductive coils), FIG. 11 (planar primary coil 52-3 surrounding a ferrite sheet 60-3).) As such, a POSITA had the motivation and skills in configuring, and reasonable expectation of success in achieving, the above-modification, especially in light of

the teachings from *Kook*, *Odendaal,* in context of a POSITA's state-art-knowledge concerning the use of ferrite material to enhance inductive energy transfer efficiency. (Ex.1002, ¶248.) *KSR* at 416-18.

Moreover, the analysis for claim 10 explains how and why it would have been obvious in view of the teachings/suggestions of *Symons* to configure the "system" of the modified *Okada* combination to implement known NFC technologies/functionalities (including an antenna) for communication of data (like that recited in claim 13). (§IX.B.1(a).) A POSITA would have had similar rationale, skills, knowledge, and expectation of success as explained for limitation 10(a), to configure/implement such NFC features as recited in claim 13. (*Id.*; Ex.1002, ¶249.) Thus, for similar reasons, the *Okada-Odendaal-Kook-Symons* combination discloses/suggests such features and therefore discloses/suggests the features of claim 13. (*Id.*)

X. DISCRETIONARY DENIAL IS NOT APPROPRIATE

Discretionary denial under Section 325(d) is not appropriate here given the prior art combinations/arguments raised during prosecution are not the same/substantially similar to the presented grounds. For instance, the Office, in allowing the challenged claims on first action failed to consider *Okada* in light of the other asserted prior art herein. (Ex.1004; Ex.1001, Cover.) *Okada* discloses/suggests many of the claimed features, and thus is relevant to the patentability of the challenged claim(s), especially when considered in context of the asserted obviousness positions. (§IX.) The examiner also did not have the benefit of expert testimony to support such teachings/suggestions as presented here. (Ex.1002.) Thus, the examiner erred in allowing the claims without considering the teachings/suggestions in the prior art relied on in this Petition (*see* §IX). (Ex.1004, 562-573.) Had the examiner done so, the challenged claims would have likely not have issued.[11]

This is true despite the issued patent from *Hui-027* (Ex.1068) (and other patent references by "Hui"), a Korean version (KR-100836634) of *Kook* (Ex.1059), *Symons* (Ex.1070), and a published application with *Okada* as a co-inventor

[11] Petitioner reserves the right to seek leave to respond to any §325(d) (and §314) arguments PO may raise to avoid institution.

(Ex.1019) having some overlapping subject matter were cited during prosecution. (Ex.1001, Cover; Ex.1004.) As with other submitted references, the examiner erred in a manner pertinent to the patentability of the challenged claims by failing to consider and apply the similar teachings by each of *Okada*, *Hui-027*, *Symons*, and *Kook* alone or in combination with other prior art. Indeed, as mentioned, *Okada* discloses many claimed features (alone and in combination with other asserted art), such as *Hui-027* that at least discloses conventional features recited in limitation 10(c), *Kook*, which at least discloses features recited in limitation 1(c) (and others), and *Symons*, which at least discloses features recited in claims 10 and 13. Such teachings should have been considered, especially in combination with other pertinent references (asserted herein). (§IX.) The examiner erred by not substantively considering and applying such collective teachings to demonstrate obviousness of the challenged claims, which recite a compilation of conventional features. (*Id.*)

Furthermore, an evaluation of the factors under *Apple Inc. v. Fintiv, Inc.*, IPR2020-00019, Paper 11 (Mar. 20, 2020) (precedential), favors institution.

The **first factor** (stay) is neutral, because Samsung has not yet moved for a stay. *See Hulu LLC v. SITO Mobile R&D IP, LLC et al.*, IPR2021-00298, Paper 11 at 10-11 (P.T.A.B. May 19, 2021).

The **second factor** (proximity) is neutral. "The PTAB will weigh this factor against exercising discretion to deny institution under *Fintiv* if the median time-to-trial is around the same time or after the projected statutory deadline for the PTAB's final written decision" (FWD). (Ex.1051, 9.) The median time from filing to trial in the Eastern District of Texas is 19 months, meaning trial will be *no earlier* than May 2024 (Ex.1052, 35), which is close to the court's scheduled jury selection for August 5, 2024 (Ex.1053, 1.) With this petition filed in June 2023, a FWD may be expected by December 2024, not long after the trial date.

That the FWD may come after the trial date is not dispositive. The Board has granted institution in cases where the FWD issued months after the scheduled trial date. The Board has relied on various justifications, such as diligence in filing the petition, a stipulation not to pursue the asserted grounds in litigation, minimal investment in litigation, and the merits of the invalidity challenge were strong. *Verizon Business Network Services, Inc. v. Huawei Techs. Co.*, IPR2020-01141, Paper 12 (Jan. 14, 2021). The same factors are present in this case. For instance, Petitioner diligently filed this petition (challenging long, convoluted claims) in advance of the one-year bar date and within four months of PO's infringement contentions in the Texas Litigation. (Exs. 1018, 1022.) Fact discovery is not anticipated to close until March 18, 2024. (Ex.1053, 3.) Expert discovery has not

yet started. (*Id.*) And the *Markman* hearing has been scheduled for February 6, 2024, after the filing of this petition. (*Id.*)

The **third factor** (investment) also weighs against denial. The district court case is in the early stages. Fact discovery is in its infancy and the parties have not engaged in expert discovery. (Ex.1053, 3.) The parties have not yet identified terms for construction. (*Id.*, 4-6.) Nor have there been any substantive orders in this case.

The **fourth factor** (overlap) also weighs against denial. Petitioner hereby stipulates that, if the IPR is instituted, Petitioner will not pursue the IPR grounds in the district court litigation. Thus, "[i]nstituting trial here serves overall system efficiency and integrity goals by not duplicating efforts and by resolving materially different patentability issues." *Apple, Inc. v. SEVEN Networks, LLC*, IPR2020-00156, Paper 10 at 19 (P.T.A.B. June 15, 2020); *see also Sand Revolution II, LLC v. Continental Intermodal Group-Trucking LLC*, IPR2019-01393, Paper 24 at 12 (P.T.A.B. June 16, 2020).

While the **fifth factor** (parties) may weigh slightly in favor of denial, because the Petitioner and PO are the same parties as in district court, based on a "holistic view," the factors favor institution. *Samsung Elecs. Co. Ltd. v. Dynamics Inc.*, IPR2020-00505, Paper 11 at 15 (P.T.A.B. Aug. 12, 2020).

Further, the Board should not discretionarily deny institution, because this petition presents compelling merits. *See Commscope Tech. LLC v. Dali Wireless,*

Inc., IPR2022-01242, Paper 23 at 4-5 (P.T.A.B. Feb. 27, 2023) (precedential). As demonstrated above, the claimed features are a compilation of technologies/techniques known to be used in inductive power/charge systems. (§IX) Moreover, this Petition is the ***sole*** challenge to the challenged claims before the Board—a "crucial fact" favoring institution. *Google LLC v. Uniloc 2017 LLC*, IPR2020-00115, Paper 10 at 6 (May 12, 2020).

XI. CONCLUSION

Accordingly, Petitioner requests institution of IPR for the challenged claims based on the specified grounds.

Respectfully submitted,

Dated: June 30, 2023

By: / Joseph E. Palys/
Joseph E. Palys (Reg. No. 46,508)
Counsel for Petitioner

CERTIFICATE OF COMPLIANCE

Pursuant to 37 C.F.R. § 42.24(d), the undersigned certifies that the foregoing Petition for *Inter Partes* Review of U.S. Patent No. 11,462,942 contains, as measured by the word-processing system used to prepare this paper, 13,960 words. This word count does not include the items excluded by 37 C.F.R. § 42.24 as not counting towards the word limit.

Respectfully submitted,

Dated: June 30, 2023

By: / Joseph E. Palys/
Joseph E. Palys (Reg. No. 46,508)
Counsel for Petitioner

CERTIFICATE OF SERVICE

I hereby certify that on June 30, 2023, I caused a true and correct copy of the foregoing Petition for *Inter Partes* Review of U.S. Patent No. 11,462,942 and supporting exhibits to be served via express mail on the Patent Owner at the following correspondence address of record as listed on PAIR:

115007 – NK Patent Law
4101 Lake Boone Trail
Suite 218
Raleigh, NC 27607

By: /Joseph E. Palys/
Joseph E. Palys (Reg. No. 46,508)