UNITED STATES PATENT AND TRADEMARK OFFICE

BEFORE THE PATENT TRIAL AND APPEAL BOARD

MERCEDES-BENZ USA, LLC
Petitioner,

v.

YECHEZKAL EVAN SPERO
Patent Owner.

U.S. Patent No. 11,208,029 to Spero

Case No: IPR2023-01126

PATENT OWNER'S PRELIMINARY RESPONSE TO PETITION FOR *INTER PARTES* REVIEW UNDER 37 C.F.R. § 42.107

TABLE OF CONTENTS

Table of Authorities 4

List of Exhibits 7

I. Introduction 8

II. Overview of the ’029 Patent - The Claimed Invention is Directed to an Adaptive Multi-LED Headlight System for Predictive Curve Illumination 11

III. Level of Ordinary Skill 17

IV. Claim Construction 18

V. The Applied References 18

A. Beam 18
B. Kobayashi 24
C. Gotou 28
D. Karlsson 31

VI. Institution Should Be Denied Because Neither Ground Has a Reasonable Likelihood of Success 36

A. A Person of Ordinary Skill in the Art Would Not Have Been Motivated to Combine Beam and Kobayashi or Gotou and Karlsson 37

1. Petitioner’s Rationale for Combining References Renders the Primary Reference Inoperable or Unsatisfactory for Its Intended Purpose 38

a. Ground 1: The Proposed Combination Renders Beam Inoperable and Defeats Beam’s High-Intensity Illumination “At All Times” Purpose 38

(1) Petitioner’s Contorted Rationale Undermines the Crux of Beam’s Illumination Strategy 40

(2) Petitioner Reads Beam in a Manner that Results in a Non-functional Device 45

b. Ground 2: Removing Gotou’s Moving Parts Would Render Gotou Inoperable Relative to Swinging About the Optical Axis 48

a. Ground 1 – Beam Teaches Away from Kobayashi's Steering of the Headlight Beam 52
b. Ground 2 - Gotou Teaches Away from Petitioner's proposed Karlsson combination 53
3. Petitioner Does Not Explain How the Combination Would Operate for its Intended Purpose.....54
a. Ground 1: Petitioner Does Not Explain How a POSITA Would Use Kobayashi's Map Data to Control Direction of Beam's Maximum Intensity Microbeams to Increase Light 55
b. Ground 2: Petitioner Does Not Explain How a POSITA Would Have Utilized Gotou's Rotation of the Optical Axis Angle with Karlsson's LED Array 57
4. Petitioner Fails to Explain Why the References Would Have Been Combined; the Rationale to Combine Suffers from Hindsight Bias 59
a. Ground 1: Petitioner Fails to Identify Why a POSITA would Add Map Data to Beam's AABH System That Already Illuminates Curves.....60
b. Ground 2: Petitioner Fails to Identify Why a POSITA would Add an LED Array to Gotou's Lighting System Absent Hindsight Bias 61
5. Petitioner's Combinations of References Do Not Teach the Control Limitations of Independent Claims 1, 12, and 23: one or more processors to "*control at least a first plurality of the LED light sources to provide light*" "*in a direction of the road curvature ahead of the motor vehicle*" "*based at least in part on the determined light change and prior to the motor vehicle reaching the road curvature*." 64
a. Ground 1: The Combination of Beam and Kobayashi Does Not Teach the Control Limitations.....65
b. Ground 2: The Combination of Gotou and Karlsson Does Not Teach the Control Limitations 66
VII. The Board Should Deny Institution on Procedural Grounds 68
A. The Petition Lacks Particularity under 35 U.S.C. § 312(a)(3).....69

1. The Petition does not specify where each claim element is found in the prior art....71
a. Petitioner fails to address all claim limitations 71
b. Petitioner's arguments address recharacterized identifiers, not the actual claim limitations 72
2. The Petition fails to specify the differences between the prior art and the challenged claims 73
B. There is Substantial Overlap Between Unified's Petition and Petitioner's Petition 75
VIII. Conclusion 76
Certificate of Service 77
Certificate of Compliance Pursuant to 37 C.F.R. § 42.24 78

Table of Authorities

Cases

Adaptics LTD. v. Perfect Co.,
IPR2018-01596, (March 6, 2019).....70

Adidas AG v. Nike, Inc.,
IPR2016-00922 (October 19, 2017).....55

Arctic Cat Inc. v. Bombardier Recreational Prods. Inc.,
876 F.3d 1350 (Fed. Cir. 2017)..... 52, 53

ATD Corp. v. Lydall, Inc.,
159 F.3d 534 (Fed. Cir. 1998)..... 59, 62

Best Med. Int'l, Inc. v. Elekta Inc.,
46 F.4th 1346, 1350 (Fed. Cir. 2022).....8

Cuozzo Speed Techs., LLC v. Lee,
136 S.Ct. 2131 (2016).....68

DePuy Spine, Inc. v. Medtronic Sofamor Danek, Inc.,
567 F.3d 1314 (Fed. Cir. 2009)..... 52, 54

Facebook, Inc. et al v. Uniloc USA, Inc. et al,
IPR2017-01524 (Dec. 4, 2017).....47

Gen. Plastic Indus., LTD. v. Canon Inc.,
IPR2015-01954 (Mar. 9, 2016).....40

Graham v. John Deere Co.,
383 U.S. 1, 148 USPQ 459 (1966).....74

Harmonic Inc. v Avid Tech., Inc.,
815 F.3d 1356 (Fed. Cir. 2016).....69

In re Gordon,
733 F.2d 900, 221 USPQ 1125 (Fed. Cir. 1984)..... 38, 40, 48, 51

In re Kahn,
441 F.3d 977, 988 (Fed. Cir. 2006) 37

In re Royka,
490 F.2d 981, 180 USPQ 580 (CCPA 1974).....65

Interconnect Planning Corp. v. Feil,
774 F.2d 1132 (Fed. Cir. 1985) 64

Kinetic Concepts, Inc. v. Smith & Nephew, Inc.
688 F.3d 1342 (Fed. Cir. 2012) 64, 68

KSR Int'l Co. v. Teleflex Inc.,
550 U.S. 398 (2006)..... 37, 55

Ortho-McNeil Pharm., Inc. v. Mylan Labs., Inc.,
520 F.3d 1358 (Fed. Cir. 2008) 62

Personal Web Techs., LLC v. Apple, Inc.,
848 F.3d 987 (Fed. Cir. 2017) 55

Sensonics, Inc. v. Aerosonic Corp.
81 F.3d 1566 (Fed. Cir. 1996) 64

Stryker Corp. v. Karl Storz Endoscopy America, Inc.,
IPR2015-00764 (September 2, 2015)..... 60, 62

Square, Inc. v. Cooper,
PR2014-00158 (May 15, 2014).....61

TRW Automotive U.S. LLC v. Magna Electronics, Inc.,
IPR2015-00972 (September 16, 2015)..... 60, 62

Wellman, Inc. v. Eastman Chem. Co.,
642 F.3d 1355 (Fed. Cir. 2011) 18

Xerox Corp v. Bytemark, Inc.,
IPR2022-00624 (August 24, 2022) 38

Statutes

35 U.S.C. § 312 ..... 11, 69, 70, 71, 73, 75
35 U.S.C. § 314 ..... 10, 11, 68, 69, 70
35 U.S.C. § 316 ..... 68, 69, 70

Other Authorities

Consolidated Trial Practice Guide 68, 69, 70

Rules

37 C.F.R. § 42.104 ..... 70, 71

List of Exhibits

Exhibit No.	Description	Identifier
2001	Declaration of Matthew A. Turk, PhD	Turk Decl.
2002	Curriculum Vitae of Matthew A. Turk, PhD	Turk CV
2003	Petition challenging U.S. Patent No. 11,208,029, *Unified Patents, LLC v. Torchlight Technologies LLC* IPR2022-01500, Paper 1, September 22, 2022	'500 IPR Petition
2004	U.S. 6,406,172 to Harbers	Harbers '172
2005	Comparison of Harbers (Ex. 1011) to Harbers '172 (Ex. 2004)	Harbers Comparison

This Petition is a copycat petition seeking joinder to a case in which institution has already been granted. Patent Owner notes for the panel's convenience that the non-institution arguments in this Preliminary Response essentially repeat the non-institution arguments that were raised in the already-instituted target case. The present Response is nonetheless being filed to protect Patent Owner's rights.

I. Introduction

Pursuant to 37 C.F.R. § 42.107, Yechezkal Evan Spero ("Patent Owner"), submits the following Preliminary Response ("Preliminary Response") to the Petition for *Inter Partes* Review of claims 1-33 ("Challenged Claims") of U.S. Patent No. 11,208,029 ("the '029 Patent") filed by Mercedes-Benz USA LLC., ("Mercedes," "Copycat Petitioner," or "Petitioner"). Patent Owner respectfully requests the Patent Trial and Appeal Board ("the Board") deny the Petition.

The Petition filed in this joinder matter is accompanied by a contingent motion for joinder to IPR2022-01586 (Paper 3 at 1) regarding the same '029 Patent and is of the sort that has been called a "copycat" petition, for it is nearly identical to the Petition filed in IPR2022-01586. *See, e.g., Best Med. Int'l, Inc. v. Elekta Inc.*, 46 F.4th 1346, 1350 (Fed. Cir. 2022) (discussing "copycat" IPR petition accompanied by motion for joinder). Petitioner explains in its motion for contingent joinder that it moves for joinder with the Volkswagen IPR "**if, and only**

if, the Board denies institution of the Mercedes Petition"; and, that its Copycat Petition "is substantively the same as the Volkswagen IPR petition. It challenges the same claims, on the same grounds, and relies on the same prior art as instituted in the Volkswagen IPR." (Paper 3 at 2.) Copycat Petitioner's expert, Dr. Nikolaos Papanikolopoulos, "submitted a declaration adopting the opinions set forth in EX1003, the declaration of Dr. Jianzhong Jiao submitted in IPR2022-01586, as his own." (Petition at 1; Ex. 1036, ¶4.)

Patent Owner understands that the petition in IPR2022-01586 has already been granted over its POPR arguments. Patent Owner respectfully disagrees with the decision to institute, and respectfully continues to believe institution of this copycat petition should be denied. Because the grounds in this petition are the same as they are in Volkswagen's petition in IPR2022-01586 from which Copycat Petitioner copied, this Petition's grounds fail to support institution for the same reasons that the same grounds in IPR2022-01586 fail to do so. For the panel's convenience in considering this response, Patent Owner notes that, much as the Petition in this case repeats the same grounds as those set forth in its joinder target, the present preliminary response repeats the same reasons and same supporting evidence set forth in Patent Owner's preliminary response in that case, and presents expert testimony and other evidence supporting its response that is the same as the evidence it presented in support of its preliminary response in that

case.

The Petition is a tangled maze of circuitous arguments, disconnected from the claim language. The Petition challenges all 33 claims of the '029 Patent with two separate obviousness Grounds. But to fit all of these challenges into a single Petition, Petitioner cut corners and obfuscated seminal issues. Petitioner's arguments are largely detached from the actual language of both the Challenged Claims and the applied references—resulting in arguments that ignore claim limitations, arguments directed to paraphrased claim language, and incomplete proofs. In short, from both a substantive and procedural basis, Petitioner failed to meet its burden.

The Petition should be denied under §35 U.S.C §314(a). Petitioner's motivation to combine arguments are vague and conclusory with respect to both how and why a POSITA would have combined the applied references. Without relying on the '029 patent itself, Petitioner identifies no rational reason to combine the references in the specific way that it alleges. Among the myriad flaws, the proffered combinations require incompatible modifications to the prior art -- which neither the Petition nor the largely duplicative expert declaration justify -- and which render the primary references inoperable for their stated purpose. As a result, all of Petitioner's asserted grounds lack sufficient evidence of obviousness for at least one limitation in all Challenged Claims. The gaps in the prior art, filled

at best with conclusory positions advocated in the Petition, leave Petitioner without a reasonable likelihood of prevailing as to any Challenged Claim.

The Petition should further be denied under 35 U.S.C. §312(a)(3), 314 because the Petition: 1) lacks particularity; and 2) fails to identify any material differences between the redundant grounds raised here and in the parallel Unified petition[1]. Petitioner relies on claim identifiers that require the reader to embark on a scavenger hunt to find the corresponding claim limitation—resulting in arguments directed to paraphrased claim limitations. Worse, Petitioner's arguments require the reader to speculate as to which reference of the combination is being relied upon for a particular claim element along with how the resulting combination would operate. Unsurprisingly, this approach leads to confusion and claim limitations not being addressed at all.

For these reasons, and others explained below, the Board should deny Petitioner's Petition for *inter partes* review of the '029 Patent.

II. Overview of the '029 Patent - The Claimed Invention is Directed to an Adaptive Multi-LED Headlight System for Predictive Curve Illumination

The '029 Patent is directed to "a novel multi-light source approach to the

[1] *Unified Patents, LLC v. Torchlight Technologies LLC,* IPR2022-01500, Paper 1, September 22, 2022

design and construction of solid-state lighting fixtures (vs. solid state lamps), which is termed a 'Digital Lighting Fixture', due to the control of individual lighting element 'digits' to provide the 'correct' lighting solution for the situation at hand." (Ex. 1001, 11:5-13.) The '029 Patent further explains that "[t]he terminology 'digital' as used herein refers to the discrete nature of the multiple LED lamps provided in the luminaire, whereby, 'digital' control results from the individual control of the discrete, i.e., 'digital' lighting elements, the LEDs, in the luminaire." (*Id*. at 2:67-3:5; Ex. 2001, ¶23.)

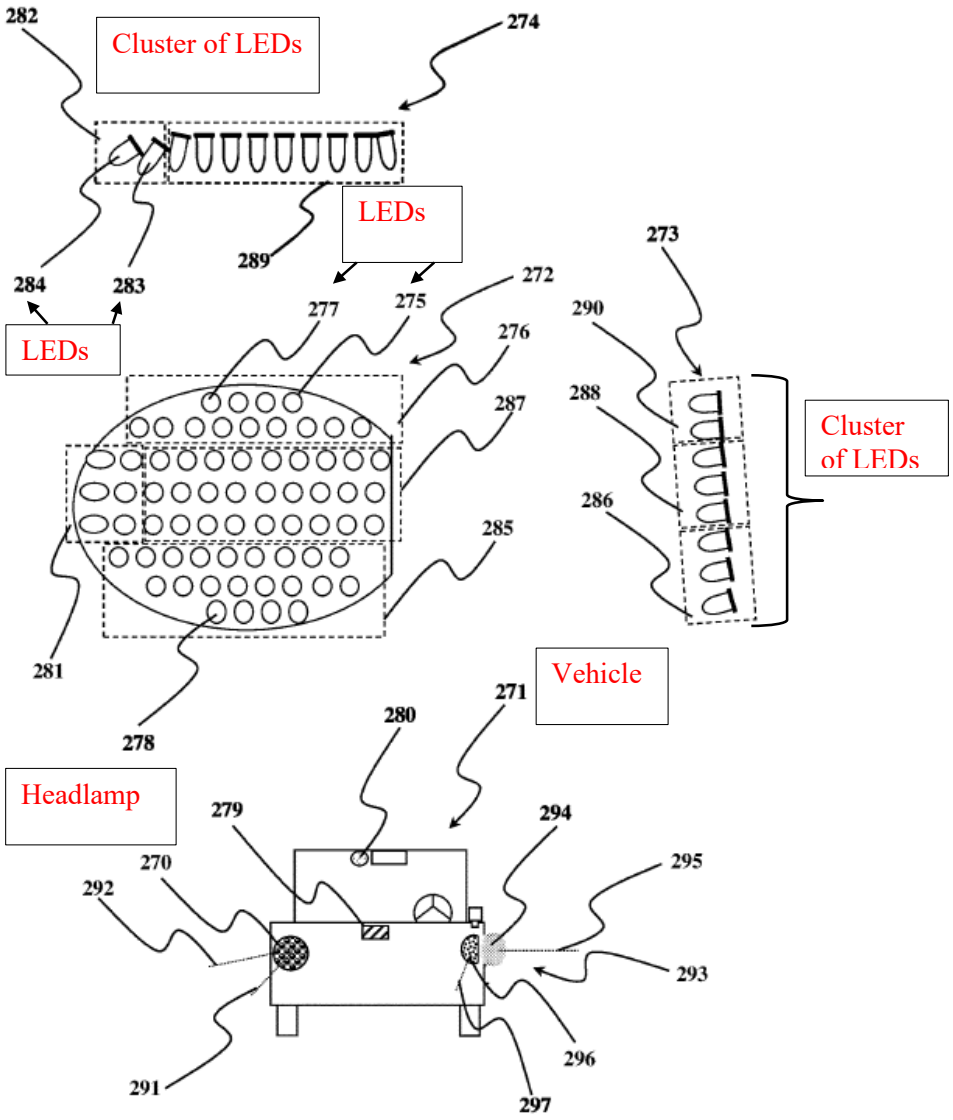

(Ex. 1001, FIG 15, Annotated)

The ’029 Patent also describes the deficiencies of prior art lighting systems that replace conventional lights with solid-state LED light sources “with some minor adjustments” but do not utilize the full “digital” control of the LEDs. (*Id*. at 9:60-63.) The ’029 Patent describes “a different approach which is to provide the end user with the most correct lighting solution not a new technology lamp to

replace the old one." (*Id*. at 11:5-7.) "In contrast to a prior art, single large, lamp replacement like light source, the present invention provides multiple, small sized sources of differing characteristics such that the effect of the whole is greater than the sum of the individual parts." (*Id*. at 11:45-49.) "The added controllability offered by breaking the total light output up into **discrete ('digital') specifically aimable and dimmable elements** which can be addressed by control electronics to effect intensity, spectrum and spatial distribution of intensity and spectrum, yields a lighting fixture (vs. lamp) of unparalleled performance." (*Id*. at 11:56-62, emphasis added.) "The invention embraces LED-illuminating devices covering a wide scope of applications", including transportation. *(Id*. at 11:14-21, 4:18-20, 50-51; Ex. 2001, ¶24.)

The claimed invention of the '029 Patent, titled "Adaptive Headlight System", is directed to multi-LED headlight systems that provide predictive curve illumination with the receipt of *map data indicating a road curvature upcoming along a road on which the motor vehicle is traveling*[2]. The '029 claimed invention solves the problem of how to provide a digital lighting solution that can "provide the optimal lighting solution in real-time" to predictively illuminate an upcoming road curvature. (*See* Ex. 1001,'029 Patent, 57:43-49.) More specifically, the '029

[2] For ease of review, claim language is italicized.

Patent discloses and claims an adaptive multi-LED headlight system that receives map data to determine and control <u>*at least a first plurality of the LED light sources*</u> to provide predictive curve illumination-- by increasing and shaping light based on the *direction of the road curvature ahead of the motor vehicle,* ***prior to the motor vehicle reaching the road curvature***[3]. (*See* e.g., Ex. 1001, Claim 1, 96:5-8; Ex. 2001, ¶25.)

The Challenged Claims include independent claims 1, 12, and 23. Independent claim 1 is representative and reproduced below with emphasis added to the Predictive Curve Limitations and the Control Limitations (defined below):[4]

1. A system for a motor vehicle, comprising:

a plurality of headlamps, <u>each comprising a plurality of LED light sources</u>;

one or more processors; and

---

[3] Patent Owner added all emphasis, unless otherwise indicated.

[4] Petitioner asserts the ’029 Patent Claims are not entitled to the earliest claimed priority date. (Petition at 4.) Petitioner’s argument is irrelevant because all applied references predate the earliest claimed priority date of the ’029 patent. Therefore, Patent Owner does not further address Petitioner’s assertions in this response, but reserves the right to do so if they become relevant.

a memory storing instructions that, when executed by one or more of the one or more processors, enable the one or more processors to:

receive first data, including at least map data, indicating a road curvature upcoming along a road on which the motor vehicle is traveling;

determine a light change, the change adapting a light pattern of the headlamps in at least one of color, intensity or spatial distribution **to increase light in a direction of the road curvature ahead of the motor vehicle** and **shaping light based at least in part on the road curvature**; and

Predictive Curve Illumination Limitations

control at least a first plurality of the LED light sources to provide light **based at least in part on the determined light change** and **prior to the motor vehicle reaching the road curvature.**

Control Limitations

(Ex. 1001, claim 1.)

The ’029 Patent describes multiple techniques for predicting an upcoming road curve. For example, Adaptive Frontal-lighting Systems are provided that “aid

in seeing around curves and other features in the road." (Ex. 1001, 51:54-56.) These systems predict upcoming curves in the road based on "instantaneous road conditions" and map data. (*Id*. at 51:56-67.) "A GPS system on the car may also let the headlamps system know of curves up ahead, one-way traffic and others [sp] factors such [that] the headlamp may be operated in the optimal mode at that instantaneous location." (*Id*.) The ''029 Patent also describes adjusting "the intensity, spectrum and beam pattern of the headlamp" based on "instantaneous road conditions" and map data indicative of an upcoming curve. (*Id;* Ex. 2001, ¶27.)

III. Level of Ordinary Skill

A POSITA for the invention claimed in the '029 Patent, would have had a Master of Science Degree (or a similar technical Master Degree, or higher degree) in an academic area emphasizing electrical engineering, computer engineering, or computer science with experience or education in optics and imaging systems or, alternatively, a Bachelor's Degree (or higher degree) in an academic area emphasizing electrical, computer engineering or computer science and having two or more years of experience in the field of optical and imaging systems. (Ex. 2001, ¶¶28-30.)

IV. Claim Construction

No claim construction is necessary to deny institution because Patent Owner's arguments for denial do not hinge on the outcome of an actual controversy about claim interpretation. *See Wellman, Inc. v. Eastman Chem. Co.,* 642 F.3d 1355, 1361 (Fed. Cir. 2011) ("[C]laim terms need only be construed to the extent necessary to resolve the controversy"). The deficiencies of the Petition are readily identifiable without defining the bounds of any specific claim term or phrase. (*Id*; Ex. 2001, ¶31.*)*

V. The Applied References

A. Beam

Beam discloses an Adaptive Anti-Blinding Headlight ("AABH") system that is non-mechanical and non-moveable, i.e. a system with no moving parts or mechanisms to position the light beam ("non-moveable"). (Ex. 2001, ¶32.) Beam recognized that existing headlight systems operated "either as a 'high beam' or as a 'low beam,'" often under manual control, and various unsatisfactory attempts to solve this problem included "systems which attempt to control the intensity profile of the beam by using a reflector or lens shaped to control the output beam in some predetermined way; systems to move the headlamps in response to changes that occur to the automobile on which they are mounted; . . . movement of headlight beams in response to changes in the vehicle's steering mechanism, etc." (Ex. 1005,

1:21-23, 1:63-2:5; Ex. 2001, ¶32.)

Beam solves the identified problems by providing a non-moveable AABH system having a multiplicity of microbeams that "operate at maximum intensity at all times" allowing "the driver to have the equivalent of high beam headlights or brighter on at all times, greatly enhancing the ability to see at night." (Ex. 1005, 6:11-12, 6:40-44, 6:54-55, 3:8-15.) Beam provides significantly **reduced** illumination only in those portions of the headlight beam that would otherwise dazzle or annoy other drivers. (Ex. 1005, 6:40-44; Ex. 2001, ¶35.) This is accomplished by "darken[ing] those microbeams that would otherwise illuminate areas near to the source of the impinging beam, thus eliminating the blinding of a driver in an oncoming vehicle, while continuing to provide intense forward illumination." (Ex. 1005, 1:15-19, Claims 4, 5, emphasis added.) While Beam discloses blanking or darkening microbeams that would otherwise dazzle other drivers, it does not disclose or teach changing direction of any microbeams, nor would it benefit from such control, as its normal mode is to "operate at maximum intensity." (Ex. 1005, 1:15-19; Ex. 2001, ¶¶32-35.)

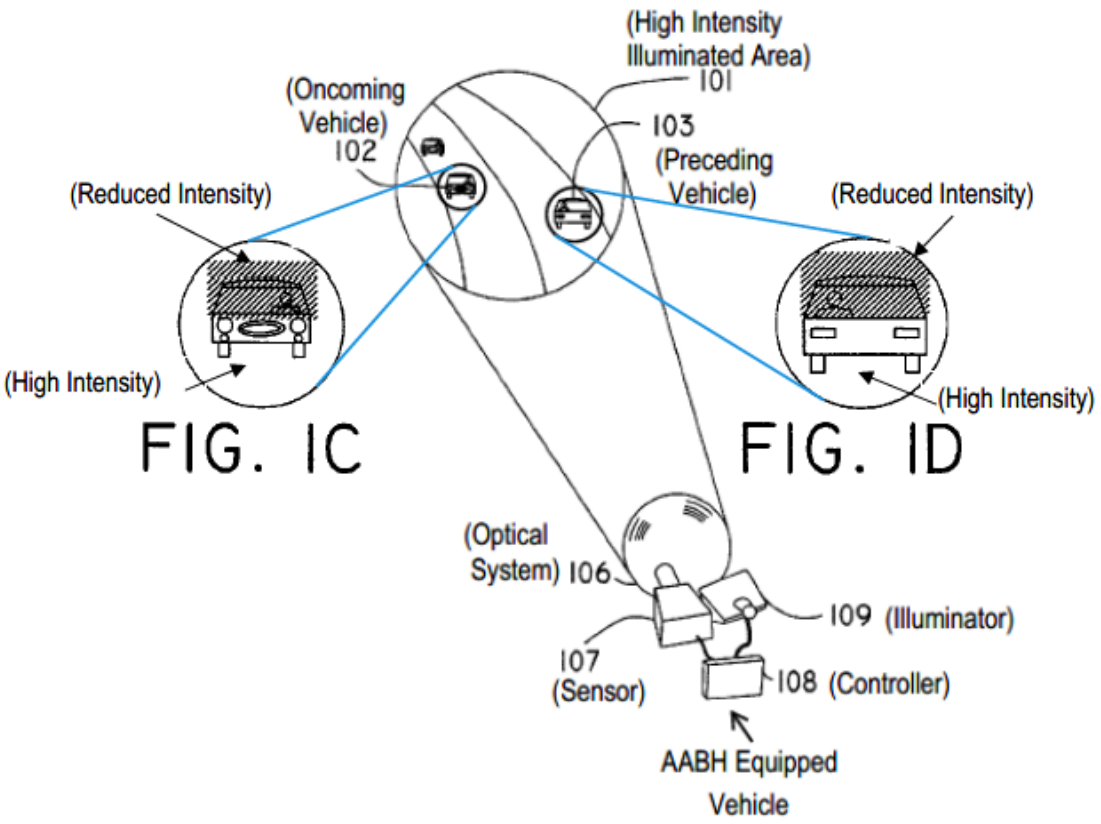

(Ex. 1005, FIGs. 1, 1C, 1D, Annotated)

In the AABH system, illuminator 109 projects individually controlled narrow-angle microbeams to provide high-intensity illumination of illuminated area 101. Headlights of an oncoming vehicle 102 and/or taillights of a preceding vehicle 103 are transmitted through optical system 106 and detected by a sensor (camera) 107. Data from sensor 107 is used by controller 108 to map the "angular position of the vehicles ahead" to a corresponding position/size of microbeams that must be significantly reduced in intensity corresponding to the shaded areas shown for oncoming vehicle 102 in Fig. 1C, and preceding vehicle 103 in Fig. 1D. (Ex. 1005, 4:9-24, 53-59, 62-64; Ex. 2001, ¶36.)

Beam describes two distinct embodiments using alternative components that significantly reduce illumination intensity of individual microbeams in response to detecting incoming headlights/taillights or other light sources. (Ex. 1005, Figs. 3, 4; Ex. 2001, ¶37.) However, neither embodiment discloses increasing intensity beyond the maximum intensity for any microbeams, nor changing the direction of any of the microbeams. (*Id.*)

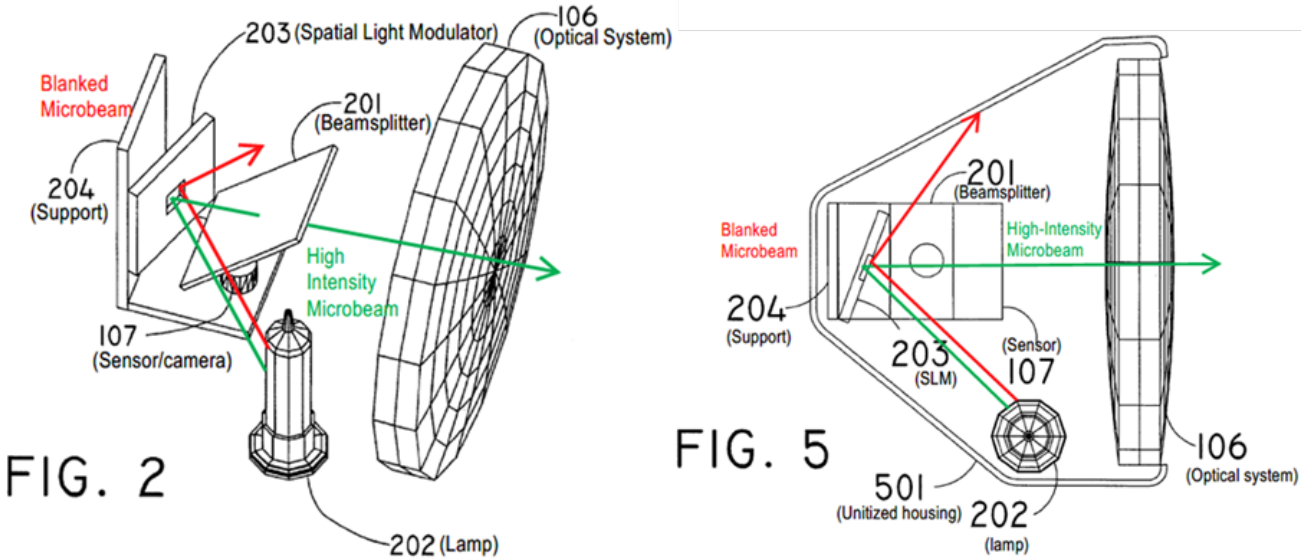

(Ex. 1005, FIGs. 2, 5, Annotated)

In the first embodiment illustrated in Fig. 2 (perspective view) and Fig. 5 (top view), light from lamp 202 falls on spatial light modulator (SLM) 203, which is controlled so that the associated individual microbeams are either 1) reflected by SLM 203 at full intensity through beam splitter 201 and out through headlamp optical system 106, or 2) "blanked (attenuated by being either absorbed or deflected [by SLM 203] to an absorbing surface" so that they <u>do not exit the</u>

headlamp optical system 106. (Ex. 1005, 4:36-40, 5:65-66.) While SLM 203 blanks one or more microbeams to reduce the intensity of illumination of the overall headlight beam by deflecting the blanked microbeams to an internal absorbing surface of the headlamp 501, it does not change the direction or angular position of the headlamp beam exiting optical system 106 because the blanked microbeams are "diverted or attenuated at the source" and never exit the headlamp optical system 106. (*Id*. at 5:66; Ex. 2001, ¶38.)

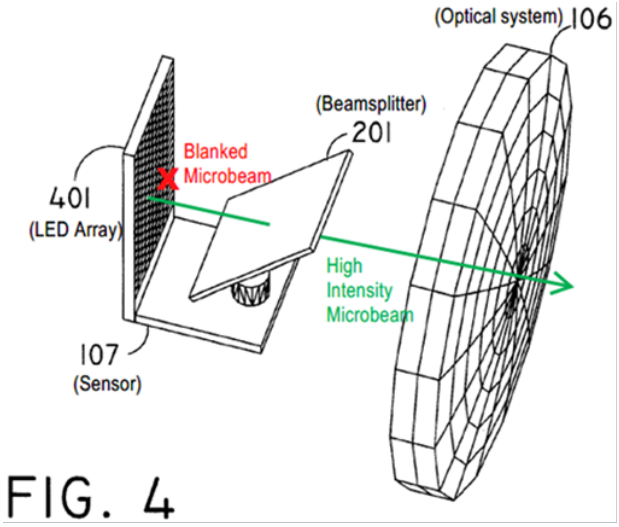

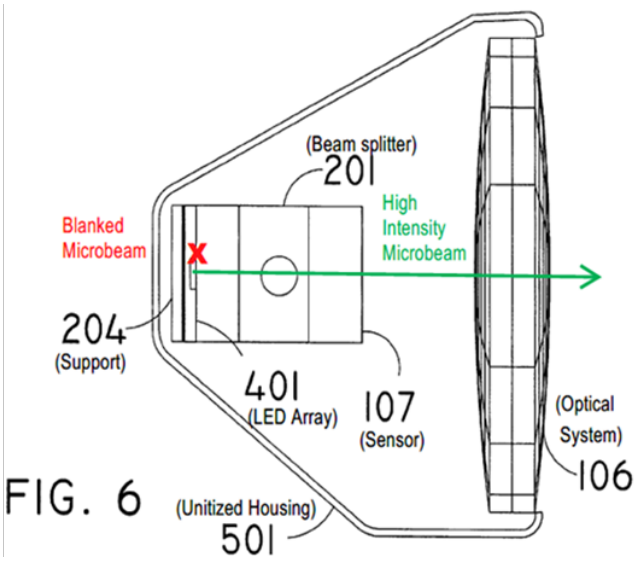

(Ex. 1005, FIGs. 4, 6, Annotated)

The second embodiment is illustrated and described with respect to Fig. 4 (perspective view) and Fig. 6 (top view). The second embodiment replaces both SLM 203 and lamp 202 used to generate and modulate (reduce) intensity of the microbeams of the first embodiment, with an array of light sources 401, such as an LED array, that generates the narrow-angle microbeams. (Ex. 1005, 5:3-16, 5:28-

31; Ex. 2001, ¶39.) Microbeam blanking is accomplished by dimming one or more of the LEDs, making the modulator of the first embodiment superfluous; it is thus omitted from the second embodiment. (*Id*.)

In operation, light from oncoming/preceding vehicles or other sources enters through optical system 106 and is reflected by beamsplitter 201 to sensor 107. (Ex. 2001, ¶40; Ex. 1005, 5:3-16.)

The sensor signals corresponding to the angular position (azimuth/elevation) or the spatial location of the detected light are mapped by controller 108 to associated microbeams to determine the size (number) and location of the LEDs within LED array 401 to be blanked or dimmed to prevent blinding/dazzling other drivers. (Ex. 2001, ¶40; Ex. 1005, 5:10-16.)

The output of the remaining fully active LEDs creates the high-intensity microbeams projected out through optical system 106. (Ex. 1005, 3:62-64, 4:53-5:16.)

Beam's AABH system is thus a non-mechanical system that eliminates moving components to overcome the problems identified with the prior art. (Ex. 2001, ¶41; Ex. 1005, 1:60-2:6.) The AABH system generates a high-intensity beam formed by non-moveable microbeams with individual microbeams being blanked, attenuated, or otherwise dimmed in response to detected incoming light to darken portions of the high-intensity illumination and prevent blinding of other drivers.

(Ex. 2001, ¶41; Ex. 1005, 2:26-52.)

As detailed in Section V.A. 1-4, Petitioner impermissibly relies on a Frankenstein embodiment of their own creation, in which the spatial light modulator, 203 in the embodiment of Figures 2 and 5, is inserted into the LED array embodiment of Figures 4 and 6. (Ex. 2001, ¶42.) In doing so, Petitioner improperly conflates the functionality of the embodiments and ignores Beam's express teaching that the lamp **and** modulator are replaced by the LED array in the second embodiment. (Ex. 1005, 5:3-10.) Notwithstanding Petitioner's assertions, a POSITA would clearly understand that Beam does not disclose 1) LEDs with controllable directionality; 2) the ability to point or steer the headlight beam for any purpose, or 3) the ability to "increase light" beyond a "maximum intensity" in any direction. (Ex. 2001, ¶¶42-43.)

B. Kobayashi

Kobayashi is directed to a mechanical headlight control system that changes direction or range of a headlight beam using map information unless a predicted vehicle travel direction as indicated by a turn indicator, steering angle, vehicle speed/acceleration differs from the map data, i.e. "[w]hen the vehicle advancing direction at which the driver aims does not coincide with the profile of the road." (Ex. 1008, 4:39.) More specifically, Kobayashi discloses a headlamp system with moveable components to control irradiation (illumination) direction and range in

accordance with a road profile when the vehicle travels along a scheduled course, or in accordance with a steering angle and vehicle speed when the predicted advancing direction of the vehicle deviates from the scheduled course (Ex. 1008, 6:4-10, 17:59-67; Ex. 2001, ¶44.)

Kobayashi changes irradiation direction using a motor to either rotate the entire lighting device about its axis, or to change relative position among internal lighting device components, such as a reflecting mirror, lens, light source, or shielding member. (Ex. 1008, 6:11-39.) Irradiation range is controlled by either combining different lighting devices with each other (such as a fog lamp, head lamp, and cornering lamp), or by controlling a motor to change position of the internal components (such as reflecting mirrors lenses, or shades) relative to one another. (Ex. 1008, 6:40-7:14.) Irradiation range may be changed responsive to a branch (intersection) ahead on a road by moving the internal lighting device components to change a horizontal irradiating angle α. (Ex. 1008, 8:1-32; Ex. 2001, ¶45.)

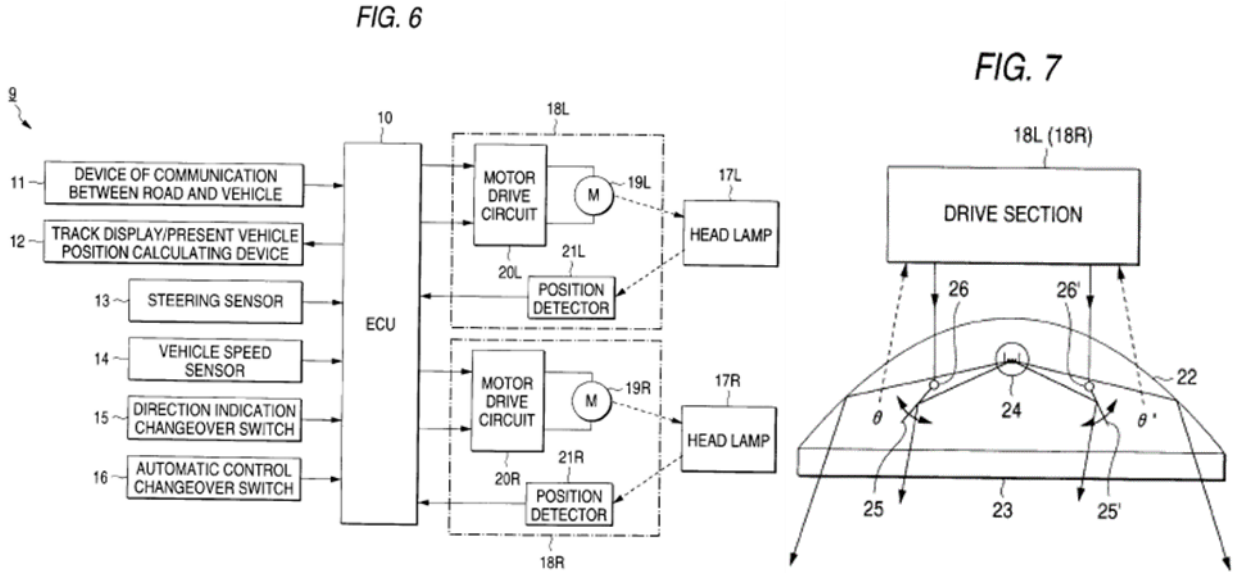

(Ex. 1008, FIGs. 6, 7)

Kobayashi's ECU 10 receives signals from: communication device 11 (conducting communication between a road and vehicle), track display/present vehicle position calculating device 12, steering sensor 13, vehicle speed sensor 14, direction indicating switch 15, and automatic control change-over switch 16. ECU 10 generates signals for drive sections 18L, 18R of head lamps 17L, 17R arranged on the left and right front portion of a vehicle. (Ex. 1008, 10:1-17.) Drive sections 18L, 18R include associated motor drive circuits 20L, 20R to drive associated motors 19L, 19R with position detectors 21L, 21R to detect the posture of the head lamps 17L, 17R or their composing members (internal components). (Ex. 1008, 10:66-11:4; Ex. 2001, ¶46.)

Figure 7 illustrates a headlamp with moveable composing members to control the direction and range of irradiation. Light source 24 and movable

reflecting mirrors 25, 25' are positioned between stationary reflecting mirror 22 and front lens 23. Movable reflecting mirrors 25, 25' are rotated about respective rotating axes 26, 26' by a link mechanism to a rotation angle (θ, θ') to provide partial direction control of irradiating light. (Ex. 1008, 11:5-14; Ex. 2001, ¶47.)

Figures 4 and 10 illustrate operation of the moveable composing members of the headlamps to control irradiation range and direction while approaching an intersection and running on a curved road, respectively. (Ex. 1008, 2:48-49, 65-67; Ex. 2001, ¶48.)

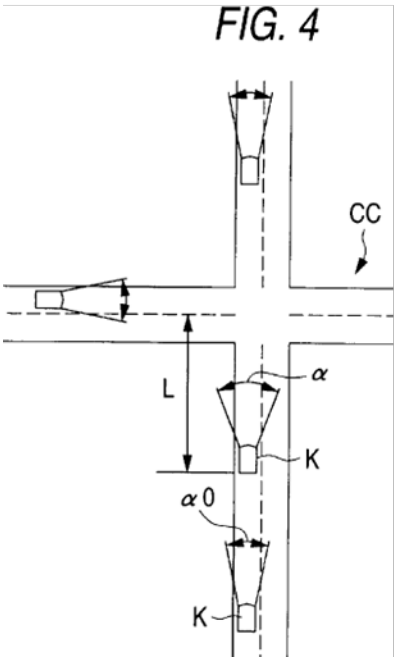

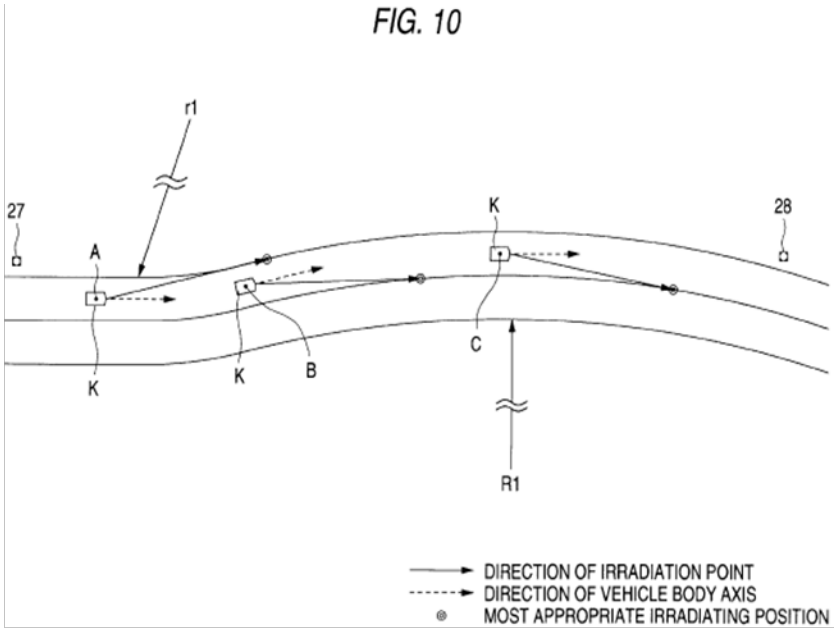

(Ex. 1008, FIGs. 4, 10)

As shown in Figure 4, Kobayashi's headlamp motors are operated to increase horizontal irradiating angle α0 to α>α0 based on a distance L from intersection CC and vehicle speed. (Ex. 1008, 8:14-25.) In Figure 10, the headlamp

motors are operated according to road profile information and vehicle speed to change the irradiating direction toward a determined irradiating position for the driver's line of sight at each position of the vehicle. When the vehicle turns to the left at point A, the left shoulder is irradiated. When the vehicle turns to right, the right shoulder is irradiated, etc. If the driver operates the steering wheel by an angle larger than necessary for the curve, irradiation control is conducted in accordance with the vehicle advancing direction predicted by the steering angle. (Ex. 1008, 14:53-15:39; Ex. 2001, ¶49.)

Kobayashi does not disclose: 1) LEDs or any other "digital" lighting sources; 2) a light sensor for detecting light for any purpose; or 3) any control of headlight irradiation direction or range related to anti-blinding or preventing glare for preceding or oncoming vehicle drivers. (Ex. 2001, ¶¶49-50.)

C. Gotou

Gotou discloses a mechanical headlamp system with moveable headlamps. Gotou's headlamps are rotated by a motor to change the leftward/rightward illumination direction using map information indicative of forward road shape, or in accordance with vehicle signals such as a direction indicating signal, a steering angle signal, and a vehicle speed signal "in the case that a vehicle runs on a place having no road information in a navigation system or the vehicle turns out of the planned course." (Ex. 1012, 1:42-2:18, Abstract, Fig. 4; Ex. 2001, ¶51.)

Gotou discloses a "swinging mechanism," shown in Figure 2 wherein "a lamp unit 4 of the head light 2 is fixed to a rotary shaft 5, and a worm gear 7 formed at a driving shaft of a motor 8 is engaged with a worm wheel 6 fitted to the rotary shaft 5." (*Id*. at 3:36-41; Ex. 2001, ¶52.)

FIG. 2

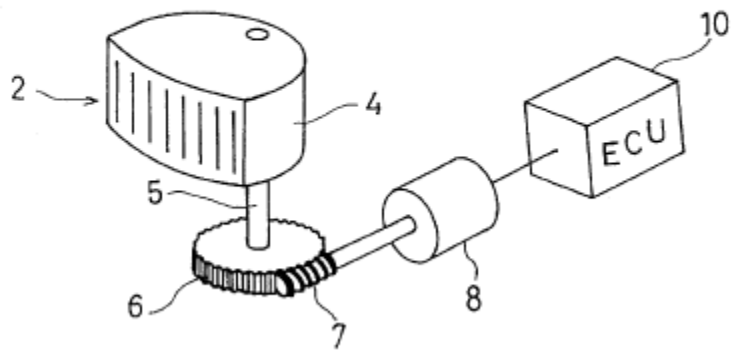

(Ex. 1012, FIG 2)

As shown below in Figure 1 of Gotou, each headlight 2 provides light along a single optical axis L. "The right and left headlights 2 and 2 are swung together in the same direction by the same angle and shown in FIG 1, angles of their optical axes L and L, with respect to the advancing direction of the vehicle, i.e. optical axis angles are both set to be θ." (Ex. 1012, 3:31-35.) Optical axes L and L are imaginary straight lines that pass through the center of the corresponding headlight projection, resulting in light output that is symmetric with respect to the optical axis at the chosen angle. Notably, while Gotou relies on adjustments to the optical

axes to change the lighting region "in front of the vehicle in rightward and leftward directions," Gotou does not disclose turning lamp unit 4 on/off or otherwise changing its intensity. (Ex. 1012, 1:60-64; Ex. 2001, ¶53.)

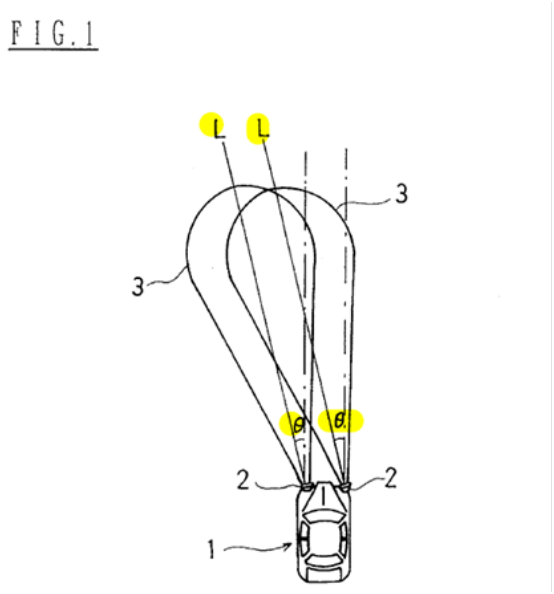

(Ex. 1012, FIG 1, Annotated)

The driving of the headlight motor 8 is controlled by a light distributing control ECU 10, depicted in FIG 3. Under the mechanical control system of Gotou, the ECU receives the map information and a series of vehicle signals such as a "direction indicating signal," "a steering angle signal" and a "vehicle speed signal" and "processes the information and signals to determine a requisite optical axis angle θ and an indicating signal is outputted to a motor driver 14 so as to achieve the optical axis angle θ, and thereby the right and left motors 8 and 8 are controlled in driving with the motor driver 14." (Ex. 1012, 3:51-66.) When the "winker lever is operated, the optical axis angle is changed at once to a predetermined angle for

lighting the turning direction of the vehicle early, and the determined optical axis angle is larger as the vehicle speed is faster." (Ex. 1012, 4:58-64; Ex. 2001, ¶54.)

Gotou further describes the state of the art at the time of the invention, pointing out the deficiencies in prior art systems that change light regions based on steering wheel position:

> [T]here are many proposals in the prior art in which the lamp optical axes are controlled for their movements in the horizontal rightward or leftward direction in response to a steering angle of the steering wheel. . . <u>However, the lighting region in such prior art as above is not changed unless the steering wheel is operated, so that a turning direction can not be lighted at a stage before entering the curved part</u>.

(Ex. 1012, 1:21-29; Ex. 2001, ¶55.)

On review of Gotou in its entirety, a POSITA would understand that Gotou does <u>not</u> disclose: 1) LEDs or any other "digital" lighting source; 2) fixed or non-moveable light sources, 3) headlamps with multiple light sources with corresponding multiple optical axes; 4) any light sensor or other sensor to detect forward vehicles, or 5) any functions related to anti-blinding or preventing glare. (Ex. 2001, ¶56.)

D. Karlsson

Karlsson discloses a non-mechanical headlight system with fixed, non-moveable arrays of LEDs. Individually controllable LEDs create "spotlight beams"

to provide forward illumination brighter than low beams or dipped headlights with light sensors to provide anti-blinding functionality by turning off LEDs corresponding to detected light. Unlike similar prior art systems that use a light sensor mounted to the windscreen, Karlsson provides light sensors interspersed with the LEDs. LEDs must be dimmed or blanked during light sensor measurements so light from the LEDs doesn't interfere with detecting light from oncoming traffic. (Ex. 1010, Abstract, 2:10-29; Ex. 2001, ¶57.)

In particular, Karlsson discloses "a lighting device 1 . . . [with] lighting means in the form of a light source 2 and light modulator means 3." (Ex. 1010, 8:10-18.) "The light source 2, the light modulator means 3 and the lens 6 are arranged on an optical axis 8" to form light 5 "into a desired emitted light beam 7." (Ex. 1010, 8:10-18.) The system includes "sensor means consisting of a light-sensitive sensor 9 and a further lens 10 disposed on the side of sensor 9 that is exposed to the incident light, such that incident light 11 on the lens 10 is formed into an incident light beam 12 on light-sensitive sensor 9." (*Id*. at 8:19-23; Ex. 2001, ¶58.)

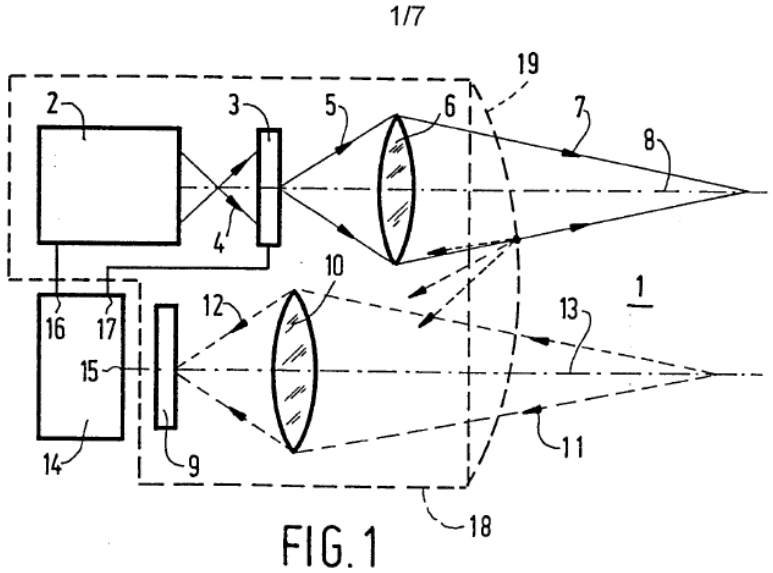

(Ex. 1010, FIG 1)

"The light modulator means 3 are controlled by the control means 14 in such a manner that the light 4 emitted by the light source 2 is processed into a light beam 7 having a desired pattern and intensity" that is "determined on the basis of the light 11 that is detected by the light-sensitive sensor 9 via the further lens 10." (*Id.* at 9:3-8.) Controlling "the pattern and the intensity of the light beam 7" of a headlight "in such a manner that no light at all or light having a low intensity is emitted in those directions from which light is detected by the light-sensitive sensor 9" prevents "glaring or blinding of oncoming traffic." (*Id*. at 9:18-23; Ex. 2001, ¶59.)

"[C]ontrol means 14 are preferably arranged to switch the incident light 5 on the lens 6 periodically on and off" and detecting incident light with the sensor 9 "during the time that the light 5 is off" avoids "reflected light being scattered by

the cover glass 19 as indicated by dashed arrows." (*Id*. at 9:27-33; Ex. 2001, ¶60.)

With reference to Figure 6, Karlsson discloses "a light beam 33 which is composed of separate, spatially distributed . . . spotlight beams 34." (*Id*. at 13:31-32.) The "spotlight beams 34 can be obtained, for example, by using a light source 2 which is composed of a grid of separate light sources, such as <u>LEDs, which can preferably be controlled either individually</u> or in groups." (*Id*. at 14:1-4, emphasis added; Ex. 2001, ¶61.)

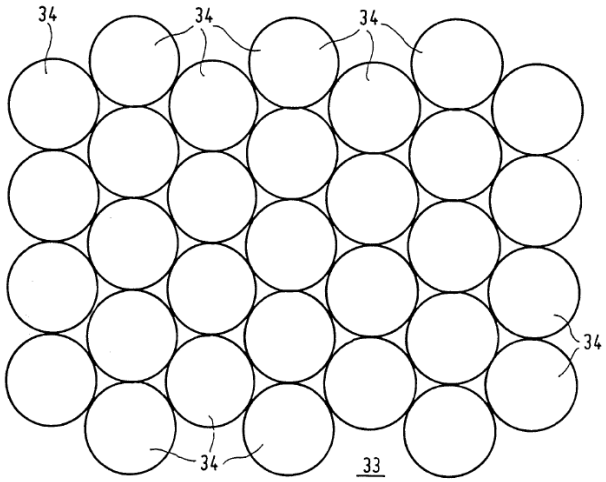

FIG. 6

(Ex. 1010, FIG 6)

Referring to Figure 14, "a number of the spotlight sources are grouped in specified levels" where "non-shaded spotlight sources indicated at D provide the dipped light function in accordance with existing vehicle headlights, whilst the single-shaded spotlight sources indicated at I provide the main-beam light function of existing vehicle headlights." (*Id*. at 19:23-28.) Further "[t]he double-shaded

spotlight sources indicated at D/I are both operative as dipped and main-beam [lights]." (*Id.*)

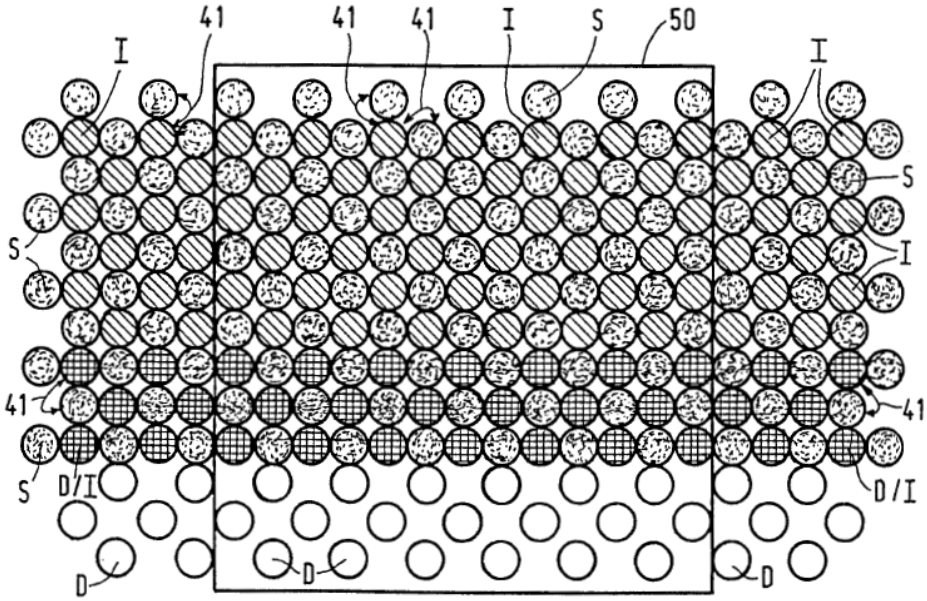

FIG. 14

(Ex. 1010, FIG 14)

The "emitted light beam 50 is represented as a window which can <u>shift in the plane of the drawings from the left to the right and from the top to the bottom</u>, if desired, and vice versa, and which may <u>vary as regards its shape and dimension</u> in dependence on the desired pattern and direction of the beam" (*Id*. at 19:29-33.) However, any shifting of the emitted light beam is constrained by the number and arrangement of LEDs within the LED array and is not capable of swinging the emitted beam optical axis in the direction of a curve. (Ex. 2001, ¶¶62-64.)

On review of Karlsson in its entirety, a POSITA would understand that Karlsson does not disclose: 1) changing direction of the emitted beam to adapt to the road; 2) changing the emitted beam before an upcoming curve; or 3) use of GPS/map data. (Ex. 2001, ¶65.)

VI. Institution Should Be Denied Because Neither Ground Has a Reasonable Likelihood of Success

Petitioner failed to meet the requisite burden of showing a reasonable likelihood that it would prevail on either of the Grounds for at least the following reasons: Petitioner's rationale for combining references: 1) renders the primary reference unsatisfactory or inoperable, 2) is impermissibly vague regarding how the references would be combined, 3) is in actuality disparaged or discouraged when the references are considered in their entirety and 4) suffers from hindsight bias—resulting in combinations that fail to teach at least two claim limitations.

Independent claims 1, 12, and 23 each require the Predictive Curve Limitation and the Control Limitation as described above in Section II. Claim 1 is representative and requires: "*a plurality of headlamps, each comprising a plurality of LED light sources; . . . and . . . one or more processors*" to provide the Predictive Curve Limitation ("*determine a light change, the change adapting a light pattern of the headlamps in at least one of color, intensity or spatial distribution to increase light in a direction of the road curvature ahead of the*

motor vehicle and shaping light based at least in part on the road curvature") and the Control Limitation ("***control at least a first plurality of the LED light sources to provide light based at least in part on the determined light change and prior to the motor vehicle reaching the road curvature***"). Due to the deficiencies in its obviousness analysis, Petitioner's proffered combinations lack the Predictive Curve Limitation and Control Limitation in all claims.

A. A Person of Ordinary Skill in the Art Would Not Have Been Motivated to Combine Beam and Kobayashi or Gotou and Karlsson

"[T]here must be some articulated reasoning with some rational underpinning to support the legal conclusion of obviousness." *KSR Int'l v. Teleflex Inc*., 550 U.S. at 418, 82 USPQ2d at 1396 (2007), *quoting In re Kahn*, 441 F.3d 977, 988 (Fed. Cir. 2006) Petitioner combines incompatible systems directed to different problems within the vehicle lighting field asserting the overly broad goal of "improving driver safety" without identifying any rational underpinning to why a POSITA would have selected and combined such features "to improve driver safety." Taken to its logical conclusion, Petitioner's "to improve driver safety" motivation argument would be applicable to all headlight prior art, in direct violation of the Supreme Court mandated obviousness analysis. (*See* Petition at 25.)

1. Petitioner's Rationale for Combining References Renders the Primary Reference Inoperable or Unsatisfactory for Its Intended Purpose

In both Grounds, the secondary reference interferes with the intended purpose of the primary reference. If a proposed modification would render the prior art invention being modified unsatisfactory for its intended purpose, then there is no suggestion or motivation to make the proposed modification. *In re Gordon*, 733 F.2d 900, 221 USPQ 1125 (Fed. Cir. 1984).

a. Ground 1: The Proposed Combination Renders Beam Inoperable and Defeats Beam's High-Intensity Illumination "At All Times" Purpose

Petitioner admits on pp. 26-27 that "Beam does not disclose using map data, such as from GPS or navigation beacons, as an input to control the intensity, shape, and/or angular position of the LEDs (or their resultant beam)" but Petitioner asserts that "it would have been obvious to a POSA to do so" to make "Beam's system even more active than prior systems, as Beam seeks to do"-- parroting unsupported expert opinion devoid of any actual evidence. (Ex. 2001, ¶67.) Expert declarations that merely repeat, "verbatim, the conclusory assertion for which it is offered to support" are entitled to little weight. *See, Xerox Corp v. Bytemark, Inc*., IPR2022-00624, Paper 9, at 15 (PTAB August 24, 2022.)

However, Beam contravenes Petitioner's unsupported arguments. More specifically, Beam expressly disparages prior art devices that control "the shape

and direction of the headlight beam" "in a predetermined profile that is expected to cause the fewest problems to the oncoming drivers under a variety of circumstances"—referring to them as a "compromise, at best between reducing glare and providing enough light to the driver for adequate visibility." (Ex. 1005, 2:15-22). Contrary to Petitioner's assertions, Beam has no need for map data to provide curve illumination, nor any other purpose for beam shaping, and would not benefit in any way from having the map data or control strategies as disclosed by Kobayashi. (Ex. 2001, ¶68.) Indeed, Beam sought to solve the problems associated with systems such as the one provided in Kobayashi "which attempt to control the intensity profile of the beam by using a reflector or lens shaped to control the output beam in some predetermined way" and systems that control "movement of headlight beams in response to changes in the vehicle's steering mechanism, etc." (Ex. 1005, 1:60-2:5; Ex. 2001 ¶69.)

Petitioner's proposed modification of Beam by adding map data and associated control complexity from Kobayashi would render Beam's AABH system inoperative or unsatisfactory for its stated purpose. In particular, Petitioner's proposed combination would: 1) defeat Beam's stated purpose of providing high-intensity illumination all the time but for selective darkening relative to other vehicles, 2) be inoperative in that Beam's AABH system is incapable of changing the direction of light from the headlamps, or of increasing

light beyond maximum intensity of the light source(s), and 3) as a result, would not accomplish Petitioner's proffered purpose of "improving driver safety." (Ex. 2001, ¶70.) *See Gen. Plastic Indus., LTD. v. Canon Inc.*, IPR2015-01954, Paper 9, at 25-26 (PTAB Mar. 9, 2016) (denying institution where "it appears that the proposed modification [] would render [the prior art] unsuitable for its intended purposes" (citing *In re Gordon*, 733 F.2d at 902)).

(1) Petitioner's Contorted Rationale Undermines the Crux of Beam's Illumination Strategy

Petitioner contorts the description of Beam's AABH system by using partial quotes taken out of context and mischaracterized to conclude that the AABH system somehow controls the direction or steering of one or more of the microbeams to **increase** light in the direction of a curve, apparently based solely on the limitations of the Challenged Claims. However, Beam is clear, beginning with the title and extending throughout the detailed description and claims, that it is an anti-blinding system that <u>darkens or blanks</u> individual microbeams to **reduce** illumination based on direction of an incoming beam of light, e.g. from an oncoming vehicle, preceding vehicle and/or any other light source. (Ex. 2001, ¶71.)

Beam specifically recognizes and disparages prior art attempts to control the

direction of the headlight beams, whether in response to vehicle loading, steering wheel, etc. (Ex. 1005, 1:60-2:6.) In contrast to the prior art systems, Beam states:

> The instant invention solves all of the enumerated problems by automatically sensing the presence and location of headlights and taillights ahead of the car on which it is mounted. It will then control the light output of a group selected from a multiplicity of narrow angle beams (microbeams) which comprise the overall headlight beam pattern. By controlling an area determined by analyzing the position of the lights sensed ahead, the area of the beam that would dazzle the driver will be darkened, <u>while maintaining [full] intensity elsewhere</u>."

(*Id*. at 2:52-64, emphasis added; Ex. 2001, ¶72.)

According to Beam, prior art systems that had to choose where to put light and that changed the direction of the headlamp beam, were prone to errors and/or subject to misalignment. (Ex. 1005, 2:15-26.) In response to these prior art problems, Beam's solution is to provide "the equivalent of high beam headlights or brighter on at all times, greatly enhancing the ability to see at night" (*Id*. at 6:53-56) except for areas where incoming light is detected. Since Beam is already putting maximum intensity light everywhere it could be needed, there would be no reason to provide the ability to change the direction of microbeams in the AABH system. (Ex. 2001, ¶73.) As illustrated in Beam's Figure 1 as annotated below, the high intensity illumination area 101 is sufficient to illuminate oncoming vehicles

102 and preceding vehicle 103, as well as both lanes of the curved road including the left shoulder and right shoulder. (Ex. 1005, Fig. 1; Ex. 2001, ¶73.) The AABH system prevents blinding drivers of oncoming vehicles 102 or preceding vehicles 103 by blanking associated microbeams at corresponding angular positions of the X-Y matrix/array of LEDs. As such, there is no need for the AABH system to point or direct light in any particular direction. (Ex. 2001, ¶73.)

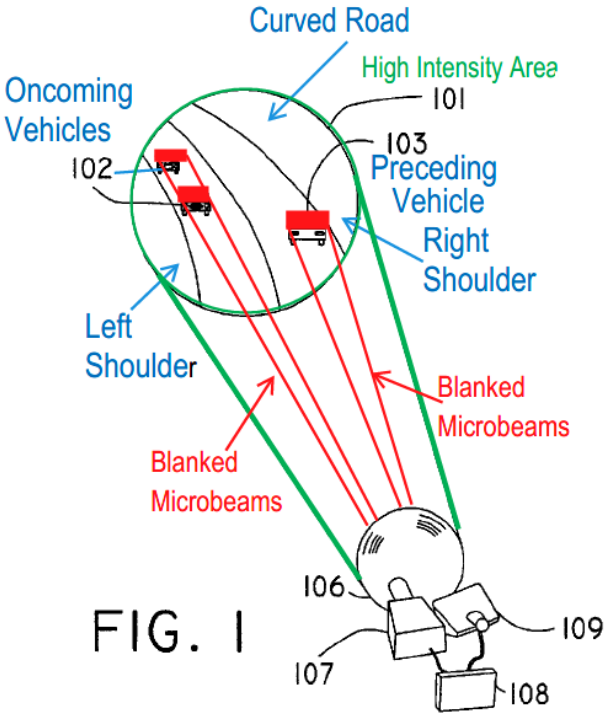

(Ex. 1005, FIG 1, Annotated)

Even if changing the direction of microbeams in response to map data as proposed by Petitioner was possible, it would allow the microbeams to illuminate areas outside the field-of-view (FOV) of sensor 107 and thus defeat the anti-blinding operability in at least part of the illuminated area 101. It would also

reduce the maximum intensity of illumination of regions within the road ahead, contrary to Beam's stated purpose. For example, changing direction of microbeams in the direction of an upcoming left-hand curve in response to map data would reduce illumination below the maximum possible in regions to the right of oncoming vehicles 102 and would defeat anti-blinding operability for any vehicles outside of the intersection of the illumination and sensor fields of view. (Ex. 2001, ¶74.)

The specification details the central tenet of the Beam reference—to darken the area of the beam that would dazzle the driver, "**while maintaining [full] intensity elsewhere**":

> These AABH headlights will operate at maximum intensity at all times. **An imaging sensor (such as a video camera) faces forward, boresighted with the headlight**. The output of the sensor is connected to the controller. The controller module uses the sensor spatial data (video) **to determine whether there are illumination sources (headlights or tail lights) present in the headlight's field-of-view**, determines their location relative to the Adaptive Anti-Blinding Headlights beam, and uses these data to control the Illuminator. When an oncoming vehicle's headlights are detected (whether or not it is equipped with the AABH system), an area slightly wider than the headlight spacing and approximately six feet high, and whose bottom edge is centered on the oncoming headlights,

> **is dimmed** in the beam-bundle of the vehicle equipped with the AABH system.

(Ex. 1005, 6:11-19; Ex. 2001, ¶75.)

> In operation, the AABH produces a multiplicity of individually directed narrow-angle beams which are herein referred to as microbeams, each being controlled by a processor responsive to incoming data from an imaging sensor. Any microbeams that would blind the oncoming driver **are diverted or attenuated at the source**. Selection of the particular microbeams **that form the dimmed area** is performed continuously and dynamically (they would be adjusted based on input to the sensor, as opposed to older systems which shape the intensity profile of the beam following a presupposed distribution requirement.) The AABH system will also sense taillights of a vehicle being followed and control those microbeams that would otherwise dazzle or annoy its driver when reflected by a rear-view mirror.

(Ex. 1005, 5:61-6:8; Ex. 2001, ¶75.)

The Beam specification further underscores that "[t]he primary advantage of the present invention over the prior art is that it produces a beam of high intensity light that enables the driver to see more clearly at night, while simultaneously protecting drivers in front from dangerous glare." (Ex. 1005, 3:37-41.) Accordingly, the fixed direction of the microbeams operating at maximum intensity would obviate the need to change the direction or angle of illumination to accommodate a curve or any other road feature as alleged by Petitioner to increase

illumination, because Beam's AABH system already operates at maximum intensity and already illuminates such road features while detecting incoming light from forward headlights/taillights. Additionally, Beam's AABH system processes sensor inputs to significantly reduce, not increase, illumination based on sensor data. (Ex. 2001, ¶76.)

(2) Petitioner Reads Beam in a Manner that Results in a Non-functional Device

Moreover, Beam's AABH system is incapable of operating as Petitioner contends. (Ex. 2001, ¶¶37-43, 77.) Petitioner's Ground 1 arguments are predicated on two false premises, namely that 1) Beams' AABH embodiments "control the angular position of each LED" (*See* Petition at 13.); and 2) the spatial light modulator (SLM) is used for controlling light exiting the headlamp. Both premises rely on misinterpretation of Beam's teachings with respect to "controlling angular position" of the LEDs. (Ex. 2001, ¶77.) On the first point, because Beam's blanking of selected microbeams forming the output beam is controlled in response to incoming light, and specifically the location of incoming light relative to the corresponding microbeams generated by the LED array, Beam maps the angular position of incoming light with each LED in the X-Y matrix to facilitate selective darkening, not to control or change the angular position of each LED, as Petitioner contends. (Ex. 2001, ¶77.) "The output and reflected wavefronts are used to

determine range and angular position of the vehicles ahead in the usual manner. The output drives controller 108, of FIG. 1, which uses range data to determine size and azimuth/elevation data to determine the position of the area of the microbeams to be dimmed." (Ex. 1005, 4:62-5:1, emphasis added.) Indeed, Beam is incapable of controlling the angular position of each LED—the LEDs are fixed in place within the X-Y matrix. (Ex. 1005, 3-16; Ex. 2001, ¶¶37-43, 77-78.)

On the second false premise, Beam's AABH embodiments provide alternative fixed, non-movable components controllable to blank, darken or reduce illumination of individual microbeams in response to detecting incoming light sources such as headlights/taillights. In the first embodiment illustrated in Figures 2 and 5, the spatial light modulator (SLM) is controlled so that the individual microbeams are either 1) reflected at full intensity out through the headlamp, or 2) any microbeams that would blind the oncoming driver are blanked by being absorbed or deflected to an absorbing surface so that they do not exit the headlamp, i.e. "microbeams that would blind the oncoming driver are diverted [] at the source". (Ex. 1005, 5:65-66.) The SLM is thus not capable of pointing or otherwise changing direction of microbeams exiting the headlamp. (Ex. 2001, ¶77.) Similarly, the second embodiment illustrated and described with respect to Figures 4 and 6 replaces the SLM 203 and lamp 202 with individually controllable light sources, such as an array of LEDs, that generate the narrow-angle LED beams, and

are selectively attenuated or blanked to prevent blinding/dazzling other drivers. As a POSITA would understand from reviewing Beam the disclosed LED array has no controllable elements capable of changing the position or otherwise pointing or steering the associated microbeams illuminating the road. (Ex. 2001, ¶78.) Petitioner improperly relies on two separate embodiments of Beam to meet the Challenged Claims, without showing how a POSITA would have thought that these embodiments and teachings are the same or interchangeable. *Facebook, Inc. et al v. Uniloc USA, Inc. et al*, IPR2017-01524, Paper 7 at 19-20 (December 4, 2017) (denying institution stating that Petitioner "inconsistently maps the recited [claim element] to different elements of [the prior art] within its proffered analysis of [the claims].")

As such, Petitioner's proposed combination renders Beam's AABH system unsatisfactory for its intended purpose of providing maximum intensity illumination everywhere (other than regions surrounding detected light sources) all the time without the use of moving components. Furthermore, the proposed combination is inoperable in that, unlike Kobayashi's system that changes position of components (such as reflecting mirrors lenses, or shades) relative to one another to change a horizontal irradiating angle α. (Ex. 1008, 8:1-32.), Beam's LED embodiment of Figures 4 and 6 has no way of controlling the direction of output light in response to Kobayashi's map data. And, it has no need to control the

direction of emitted light, as it already illuminates the field-of view (FOV) of the headlights (and FOV of the aligned, bore-sighted sensor) at "maximum intensity." (Ex. 2001, ¶79.) Accordingly, there is no suggestion or motivation to make Petitioner's proposed modification. *See In re Gordon*, 733 F.2d 900, 221 USPQ 1125 (Fed. Cir. 1984)

b. Ground 2: Removing Gotou's Moving Parts Would Render Gotou Inoperable Relative to Swinging About the Optical Axis

Petitioner states that a "POSA would have been motivated to combine Gotou's adaptive vehicle headlamp that uses map data as a control input to predict and adjust illumination direction with Karlsson's controllable LEDs as a light source." (Petition at 55.) Petitioner further states that "Karlsson's controllable LEDs would have <u>simplified</u> controlling the illumination direction and beam shape by <u>removing Gotou's moving parts (e.g., motors)</u>, while also providing expanded beam shaping abilities." (*Id.*) The applied references contradict Petitioner's assertions as Karlsson's "controllable LEDs" are incapable of swinging the optical axis to change the illumination direction as taught by Gotou rendering Petitioner's combination and modification inoperable for its intended purpose. (Ex. 2001, ¶80.)

Gotou discloses a relatively simple "swinging mechanism" for adjusting the optical axis each headlamp. (Ex. 1012, 3:36-41.) With reference to Figure 2, Gotou explains that "a lamp unit 4 of the head light 2 is fixed to a rotary shaft 5, and a

worm gear 7 formed at a driving shaft of a motor 8 is engaged with a worm wheel 6 fitted to the rotary shaft 5." (*Id.*) Gotou further discloses "varying the optical axis toward the planned running direction at an early stage **before** the steering wheel is actually turned" by controlling the motor 8 of the swinging mechanism. (Ex. 1012, 6:40-44, emphasis added; Ex. 2001, ¶81.)

Karlsson discloses a lighting device that provides forward illumination, i.e., it projects light in front of a vehicle. (Ex. 1010, Fig. 16.) Karlsson also discloses adapting a light beam pattern by turning off spotlight sources of a light beam **while** the vehicle is turning, based on a signal from a direction sensor 54 that is connected to a steering wheel, to avoid blinding oncoming traffic: "The direction sensor 54 is in particular intended for determining when the car 56 is taking a bend, so that the light beam 7 can be adapted to prevent the traffic on the other side of the road from being blinded as much as possible." (Ex. 1010, 20:22-32; Ex. 2001, ¶82.)

Removing Gotou's "moving parts" as proposed by Petitioner, would eliminate Gotou's ability to "swing" the optical axis of the lights prior to a turn, i.e., in a direction that is different than a current steering angle. (Ex. 2001, ¶83.) Rather, controlling Karlsson's LED array to laterally shift the window of active LEDs would merely control which LEDs are illuminating the road ahead for each headlight as constrained by the limited width of the array as shown below—

resulting in a beam that can be "shifted" laterally from left to right, but would still be aimed at all times in the same direction as the vehicle (i.e. forward). (Ex. 2001, ¶84.)

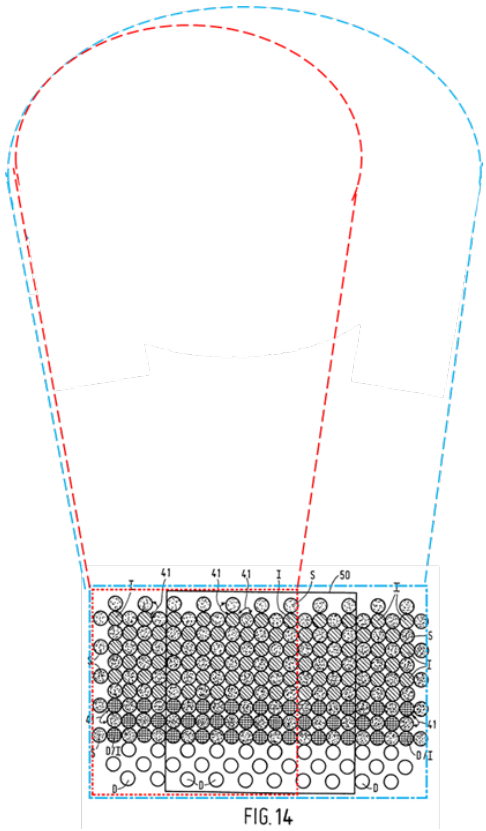

(Ex. 1010, FIG 14, Annotated)

In particular, controlling Karlsson's LED array to laterally shift the window of active LEDs would shift the beam optical axis left/right for each headlight as indicated in red in the above figure, with the maximum shift constrained by the limited width of the array as indicated in blue in the above figure. (*Id.)*

Thus, Petitioner's proposed Gotou/Karlsson combination as shown in Figure 9 (below right) would result in a subset of the blue beam cone being illuminated.

This minor shift is insignificant with little to no curve illumination when compared to Gotou's unmodified lighting regions resulting from swinging/rotating the optical axis shown in Figure 9 (below left). (Ex. 2001, ¶85.)

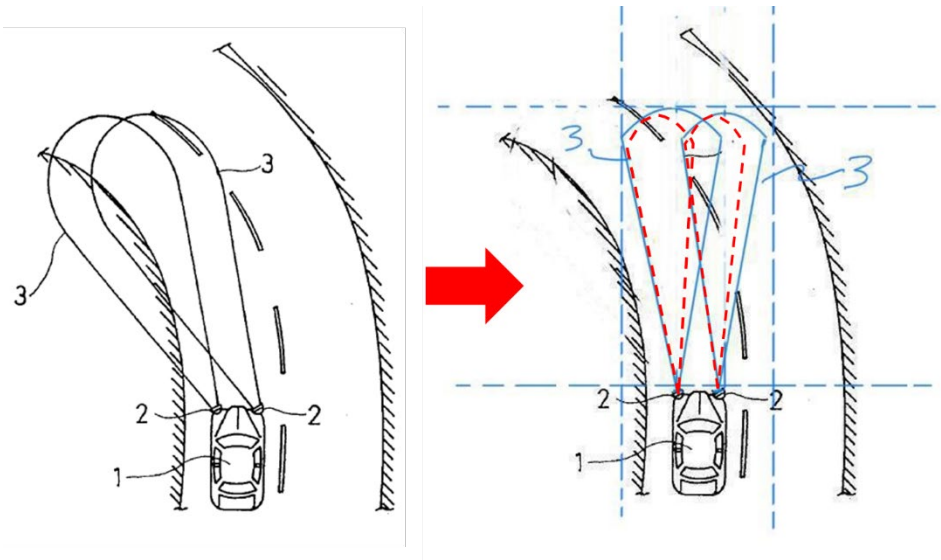

Ex. 1012, Fig. 9 (Annotated)

Thus, Petitioner's proposed modification to Gotou would render Gotou unsatisfactory for its intended purpose of "varying the optical axis . . . before the steering wheel is actually turned." (Ex. 1012, 6:40-44; Ex. 2001, ¶86.) Furthermore, there would be no adjustment to the optical axis by an angle theta as required by Gotou. (Ex. 2001, ¶86.) Accordingly, there is no suggestion or motivation to make Petitioner's proposed modification. Rather, there are good reasons not to make the proposed modification. (*Id.) See In re Gordon*, 733 F.2d

900, 221 USPQ 1125 (Fed. Cir. 1984).

2. Petitioner's Rationale for Combining References is Undermined by the References Themselves, at Least One Reference Teaches Away From the Combination

"An inference of nonobviousness is especially strong where the prior art's teachings undermine the very reason being proffered as to why a person of ordinary skill would have combined the known elements." *DePuy Spine, Inc. v. Medtronic Sofamor Danek, Inc.*, 567 F.3d 1314, 1326 (Fed. Cir. 2009). Petitioner had, and failed to meet the burden, of at least addressing these teaching away statements. *Arctic Cat Inc. v. Bombardier Recreational Prods. Inc.*, 876 F.3d 1350, 1363 (Fed. Cir. 2017). ("Evidence suggesting reasons to combine cannot be viewed in a vacuum apart from evidence suggesting reasons not to combine").

a. Ground 1 – Beam Teaches Away from Kobayashi's Steering of the Headlight Beam

Beam provides "a headlight with an output comprising a multiplicity of microbeams projecting a composite beam of light <u>in the forward direction</u>" and darkening microbeams that would blind a driver in an oncoming vehicle "while continuing <u>to provide intense forward illumination</u>." (Ex. 1005, 1:9-18.) Beam identifies problems with various prior art systems including low beam illumination often being too dim to see street signs, terrain features, etc., and availability of using a high beam (even if automatic) may be limited to prevent dazzling drivers

of other vehicles. Beam also identifies problems with controlling the shape and direction of headlight beams. (Ex. 1005, 1:60-2:50.) Beam specifically disparages systems such as disclosed by Kobayashi that "attempt to control the intensity profile of the beam by using a reflector or lens shaped to control the output beam" and systems that control "movement of headlight beams in response to changes in the vehicle's steering mechanism, etc." (*Id*. at 1:61-2:5; Ex. 2001, ¶88.) Given the disparaging teachings in Beam, Petitioner had the burden to at least address these teaching away statements. *Arctic Cat Inc. v. Bombardier Recreational Prods. Inc*., 876 F.3d 1350, 1363 (Fed. Cir. 2017). ("Evidence suggesting reasons to combine cannot be viewed in a vacuum apart from evidence suggesting reasons not to combine").

According to Beam, the identified problems with references such as Kobayashi are solved by providing a "far brighter headlight beam while simultaneously protecting the drivers of all vehicles ahead from being dazzled by the light. (Ex. 1005, 3:13-15.) As such, it is wholly unclear why a POSITA would have wanted to modify Beam's LED system with unnecessary features of a mechanical prior art system with known shortcomings. (Ex. 2001, ¶89.)

b. Ground 2 - Gotou Teaches Away from Petitioner's proposed Karlsson combination

Gotou describes the deficiencies in prior art systems that adjust a lighting

region based on steering wheel position:

> there are many proposals in the prior art in which the lamp optical axes are controlled for their movements in the horizontal rightward or leftward direction in response to a steering angle of the steering wheel. . . <u>However, the lighting region in such prior art as above is not changed unless the steering wheel is operated, so that a turning direction can not be lighted at a stage before entering the curved part</u>.

(Ex. 1012, 1:21-29, emphasis added; Ex. 2001, ¶90.)

Relatedly, Gotou underscores "**<u>it is important that a timing of optical axis control is appropriate</u>**" to vary the optical axis toward the planned running direction **at an early stage before the steering wheel is actually turned.** (Ex. 1012, 6:40-44, emphasis added; Ex. 2001, ¶91.)

However, Petitioner's proposed modification to Gotou would result in a deficient lighting system that is unable to control the LED array of Karlsson to swing the optical axis of illumination as taught by Gotou <u>before the steering wheel is turned</u>. (Ex. 2001, ¶92.) Accordingly, Gotou teaches away from Petitioner's proposed combination. *See DePuy Spine, Inc*. 567 F.3d 1314, 1326 (Fed. Cir. 2009).

3. Petitioner Does Not Explain <u>How</u> the Combination Would Operate for its Intended Purpose

Petitioner must explain how and why a POSITA would have modified or

combined the prior art. *KSR Int'l Co. v. Teleflex Inc*., 550 U.S. 398, 418 (2006) (requiring articulated reasoning with rationale underpinning as to how or why a person of ordinary skill in the art would have combined or modified the teachings of the prior art); *Personal Web Techs., LLC v. Apple, Inc*., 848 F.3d 987, 994 (Fed. Cir. 2017) (holding obviousness determination to be improper where the record lacked a "clear, evidence-supported account" of "how the combination" would work). *Adidas AG v. Nike, Inc.,* IPR2016-00922, Paper 21 at 36 (PTAB October 19, 2017) (holding that challenged claims are patentable when the "Petitioner fails to explain why and how a person of ordinary skill in the art would combine" two references).

a. Ground 1: Petitioner Does Not Explain How a POSITA Would Use Kobayashi's Map Data to Control Direction of Beam's Maximum Intensity Microbeams to Increase Light

Petitioner does not explain how the AABH system of Beam would use the map data of Kobayashi to determine a light change to **increase** light as Beam's embodiments operate at maximum intensity and only disclose **reducing** illumination. Petitioner does not explain how a POSITA would convert Kobayashi's headlamp motor control signals for "rotating the entire lighting device about its axis" or "controlling the posture of a member composing the lighting device such as a reflecting mirror, lens, light source and shielding member" in

response to map data to control Beam's LED array. Petitioner also does not: 1) explain how the combined Beam-Kobayashi system would determine which microbeams to blank as compared to which microbeams to maintain in a particular direction; 2) explain how Beam's AABH system would control the direction of the microbeams using Beam's LED array; 3) how the system would **increase** light "while continuing to provide intense forward illumination" as the AABH system already operates at maximum intensity to provide "bright high beams on at all times"; or 4) provide Beam's anti-blinding feature for microbeams that change direction based on a road profile and are therefore no longer aligned with the field-of-view of Beam's sensor/camera. (Ex. 2001, ¶94.)

As previously described, Beam disparages controlling direction of the headlight beam. Beam's AABH system is directed to high-intensity forward illumination. As such, neither of the embodiments disclosed by Beam control direction of the headlight beam. Rather, both the SLM and LED embodiments are controlled to blank selected microbeams to provide the anti-blinding features of the AABH system "while continuing to provide intense forward illumination". Petitioner does not explain how to reconcile Beam's stated goal of providing maximum intensity all the time with providing even more than maximum intensity when approaching a curve identified by Kobayashi's map data. (Ex. 2001, ¶¶74, 95.)

b. Ground 2: Petitioner Does Not Explain How a POSITA Would Have Utilized Gotou's Rotation of the Optical Axis Angle with Karlsson's LED Array

Petitioner states that "A POSA would have had a reasonable expectation of success combining Gotou and Karlsson." (Petition at 64.) Petitioner further states that "a POSA would have understood how to combine the teachings of Gotou and Karlsson by simply substituting Gotou's system with Karlsson's LED array and control, as shown, for example, in Karlsson's Figures 14 (see also FIGs. 3 and 15)." (Petition at 64; Ex. 2001, ¶96.)

It is however unclear what features of each of Gotou and Karlsson's systems are retained in the proffered combination. For example, Petitioner discloses modifying Gotou to include Karlsson's light source 2, but not its light modulator means 3 and lens 6 (*See* Figure 1). However, without these additional components, Karlsson would provide light from the LED array along multiple axes. (Ex. 2001, ¶97.) And, Petitioner fails to explain how Gotou's optical axis determination, for a single optical axis, applies to Karlsson's LED array that includes multiple optical axes. Petitioner oversimplifies the differences between the moveable Gotou reference and the fixed LED system in Karlsson, resulting in an incompatible combination. (Ex. 2001, ¶97.)

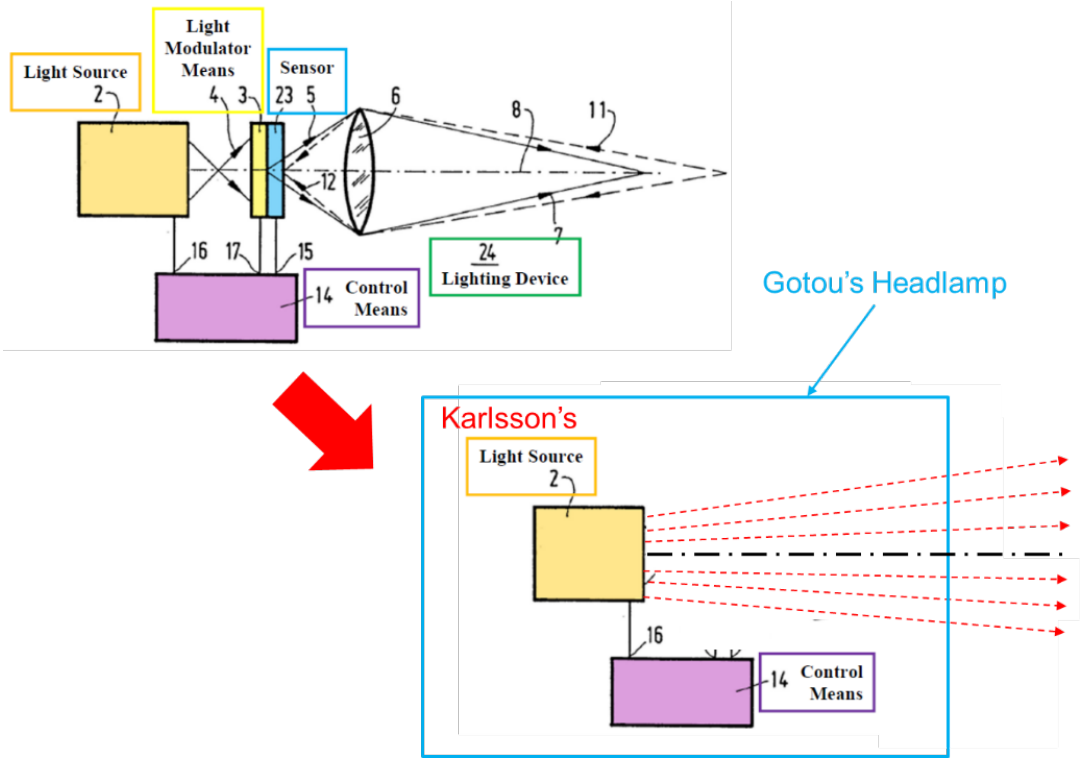

Ex. 1010, Fig. 3 (Annotated)

Petitioner does not explain how "Simply substituting Gotou's system with Karlsson's LED array and control" (Petition at 64.) would reconcile Karlsson's input from "direction sensor 54, which is for example connected to the steering wheel . . . for determining when the car is taking a bend, so that the light beam 7 can be adapted to prevent the traffic on the other side of the road from being blinded" (Ex. 1010, 20:22-32.) that would reduce light, and Gotou's map information that swings "the optical axis toward the planned running direction at an early stage before the steering wheel is actually turned" (Ex. 1012, 6:40-44.) that would increase light. (Ex. 2001, ¶98.)

Because Petitioner failed to explain how the proposed Gotou-Karlsson

combination would operate with respect to: 1) exactly what elements of Karlsson's "LED array and control" are being substituted into Gotou's system and what elements of Gotou's system those elements replace; 2) controlling Karlssons's LED array along multiple optical axes based on Gotou's determination of motor control signal to adjust a single optical axis angle using map information before the steering wheel is turned; and 3) controlling Karlsson's LED array using Karlsson's direction sensor while the steering wheel is being turned, Petitioner has failed to meet their burden of explaining how and why a POSITA would have modified or combined Gotou and Karlsson. (Ex. 2001, ¶99.)

4. Petitioner Fails to Explain Why the References Would Have Been Combined; the Rationale to Combine Suffers from Hindsight Bias

Petitioner's impermissible reliance on hindsight rather than any teachings from the references undermines the alleged combination of references as proposed. A "[d]etermination of obviousness cannot be based on the hindsight combination of components selectively culled from the prior art to fit the parameters of the patented invention." *ATD Corp. v. Lydall, Inc.*, 159 F.3d 534, 546 (Fed. Cir. 1998) (emphasis added). Instead, "[t]here must be a teaching or suggestion within the prior art, or within the field of the invention, to look to particular sources of information, to select particular elements, and to combine them in the way they are combined by the inventor." (*Id.)*

Petitioner fails to identify such rational underpinnings in the references to explain why a POSITA would add features from the secondary references to modify the primary references when, according to their own argument, the primary references already provide curve illumination. In both Grounds, the reason for combining the references is not to achieve the overly broad and amorphous goal of "improving driver safety" as stated by Petitioner. Rather, the only plausible, but impermissible reason for combining the references as proposed is to meet the '029 Patent claims. *TRW Automotive U.S. LLC v. Magna Electronics, Inc.*, IPR2015-00972, Paper 9, slip op. at 15, 17 (September 16, 2015). *See also Stryker Corp. v. Karl Storz Endoscopy America, Inc.*, IPR2015-00764, Paper 13, slip op. at 13 (September 2, 2015).

a. Ground 1: Petitioner Fails to Identify Why a POSITA would Add Map Data to Beam's AABH System That Already Illuminates Curves

As clearly shown in Figure 1 of Beam and acknowledged by Petitioner, Beam's AABH system provides higher than high-beam intensity that illuminates both lanes of the roadway including oncoming vehicles, a preceding vehicle, left shoulder, right shoulder, and the upcoming curve (and would also illuminate upcoming intersections and any other road feature). (Ex. 2001, ¶101.) As such, Beam's AABH system is agnostic to the road profile and effectively includes some

built-in curve illumination. Accordingly, there is simply no plausible reason to add superfluous map data and related control complexity of Kobayashi's moveable mechanical system to Beam's superior AABH LED system that provides high intensity illumination of the driver's entire field of view, other than using hindsight bias in a failed attempt to meet the limitations of the Challenged Claims of the '029 Patent. (*Id.*)

b. Ground 2: Petitioner Fails to Identify Why a POSITA would Add an LED Array to Gotou's Lighting System Absent Hindsight Bias

Petitioner's hindsight theory undermines the Petition's alleged motivation for combining the references as proposed. Except for identifying elements of the Challenged Claims to engage in hindsight reconstruction, Petitioner fails to explain why in Ground 2 it would be obvious to add an LED array from Karlsson to redundantly perform the functionality that it asserts is already present in Gotou — namely providing predictive illumination of a curve. (Petition at 55.) *See, Square, Inc. v. Cooper,* IPR2014-00158, Paper No. 8, at 30 (May 15, 2014) (an obviousness challenge was dismissed where the primary reference already had the capabilities that the secondary reference provided with its added disclosures.) Indeed, Petitioner fails to explain why a POSITA would be motivated to combine Gotou and Karlsson, when the combination results in a worse, materially deficient form of curve illumination than Gotou provides alone. (Ex. 2001, ¶102.) The only

actual motivation to add Karlsson's LED array was to meet the claim limitations. (*Id.*) *TRW Automotive U.S. LLC v. Magna Electronics, Inc.*, IPR2015-00972, Paper 9, slip op. at 15, 17 (September 16, 2015). *See also Stryker Corp. v. Karl Storz Endoscopy America, Inc.*, IPR2015-00764, Paper 13, slip op. at 13 (September 2, 2015).

Petitioner states that the problem to solve is illuminating a curve, however Petitioner may not "simply retrace[] the path of the inventor with hindsight, discount[] the number and complexity of the alternatives, and conclude[] that the invention . . . was obvious." *Ortho-McNeil Pharm., Inc. v. Mylan Labs., Inc.*, 520 F.3d 1358, 1364 (Fed. Cir. 2008).

Petitioner asserts that a POSITA would have been motivated to combine Gotou and Karlsson, to result in a modified Gotou system with "additional control based on individualized LEDs" and "Karlsson expressly recognized benefits of directional control using direction sensor 54." (Petition at 63.) However, a "[d]etermination of obviousness cannot be based on the <u>hindsight combination of components selectively culled from the prior art to fit the parameters of the patented invention</u>." *ATD Corp. v. Lydall, Inc.*, 159 F.3d 534, 546 (Fed. Cir. 1998) (emphasis added.) Instead, "[t]here must be a teaching or suggestion within the prior art, or within the field of the invention, to look to particular sources of information, to select particular elements, and to combine them in the way they are

combined by the inventor." (*Id.*)

Here, Gotou and Karlsson describe different headlight configurations having different advantages—Gotou uses motors to swing entire lamp units to provide a wholly mechanical solution for predictive curve illumination, whereas Karlsson provides an LED headlight embodying non-moveable LEDs having individually controllable intensity. Save attorney argument that tracks the improvements identified in the '029 Patent, Petitioner fails to provide supportive evidence to explain why a POSITA would have chosen to take a wholly mechanical adaptive lighting system, with motors to move entire lamp units based on map information before reaching a curve, and convert it into a digital lighting system, having an LED array devoid of motors that uses light-detecting sensors to control intensity (not direction) of individual LEDs, and a direction sensor based on a steering wheel that detects when entering a bend (not before entering a bend). (*See* Petition at 63.)

Critically lacking from Petitioner's analysis is what would have led the skilled artisan, in the absence of the '029 Patent disclosure, to convert Gotou's fully functional mechanical lighting system to a digital lighting system. Petitioner's silence is not accidental-- a rational explanation is especially challenging when the proposed combination results in a worse, materially deficient form of curve illumination as shown above (Section VI.A.1.b) than Gotou provides

alone, which underscores the fact that the only actual motivation to add Karlsson's LED array was to meet the claim limitations.

The Federal Circuit has cautioned against such a hindsight approach: "[t]he invention must be viewed not after the blueprint has been drawn by the inventor, but as it would have been perceived in the state of the art that existed at the time the invention was made." *Sensonics, Inc. v. Aerosonic Corp.*, 81 F.3d 1566, 1570 (Fed. Cir. 1996) (citing *Interconnect Planning Corp. v. Feil*, 774 F.2d 1132, 1138 (Fed. Cir. 1985)).

Ultimately, Petitioner had the burden to establish a reason why a POSITA would have been motivated to select the applied references and make the set of system modifications required by Petitioner's theory. Petitioner's conclusory assertions fail to meet the requisite burden.

5. Petitioner's Combinations of References Do Not Teach the Control Limitations of Independent Claims 1, 12, and 23: one or more processors to "*control at least a first plurality of the LED light sources to provide light*" "*in a direction of the road curvature ahead of the motor vehicle*" "*based at least in part on the determined light change and <u>prior</u> to the motor vehicle reaching the road curvature*."

Petitioner must show where each claim limitation is found in the prior art. *See e.g.*, *Kinetic Concepts, Inc. v. Smith & Nephew, Inc.*, 688 F.3d 1342, 1361 (Fed. Cir. 2012). Failure to do so defeats a claim of obviousness. (*Id.*) To establish

a prima facie obviousness rejection, all of the claimed features must be taught or suggested by the prior art. *See In re Royka,* 490 F.2d 981, 180 USPQ 580 (CCPA 1974).

a. Ground 1: The Combination of Beam and Kobayashi Does Not Teach the Control Limitations

After Petitioner acknowledges that "Beam's adaptive anti-blinding headlight (AABH) system adjusts vehicle headlight illumination to provide significantly reduced illumination in certain areas to protect the vision of other drivers" on p. 30, Petitioner concludes on p. 37 that "Modified with Kobayashi's ECU functionality, the combined system uses the map data from Kobayashi's GPS navigation device 29 to 'increase light in a direction of the road curvature ahead of the motor vehicle,' thus shaping light based in part on the road curvature." (Ex. 2001, ¶104.)

However, Petitioner does not explain how a POSITA would convert Kobayashi's headlamp motor control signals for "rotating the entire lighting device about its axis" or "controlling the posture of a member composing the lighting device such as a reflecting mirror, lens, light source and shielding member" in response to map data to control Beam's LED array. Petitioner also does not explain how the combined Beam-Kobayashi system would 1) determine which microbeams to blank as compared to which microbeams to control in a particular

direction, 2) how Beam's AABH system would control the direction of the microbeams using Beam's LED array, or 3) how the system would **increase** light in the direction of a curve as claimed "while continuing to provide intense forward illumination" as the AABH system already operates at maximum intensity to provide "bright high beams on at all times." (Ex. 2001, ¶105.)

As such, the combined Beam-Kobayashi system fails to satisfy the Control Limitations of the independent Challenged Claims. (Ex. 2001, ¶¶104-109.)

b. Ground 2: The Combination of Gotou and Karlsson Does Not Teach the Control Limitations

Petitioner relies on Gotou's headlamp device for satisfying the "*headlamp*" limitations, Karlsson's LED arrays for satisfying the "*LED*" limitations. (Petition at 66-67; Ex. 2001, ¶106.) Petitioner also relies on Gotou's disclosure at 6:40-44 for satisfying the "*control[ling] at least a first plurality of the LED light sources to provide light" "to increase light in a direction of the road curvature ahead of the motor vehicle"* limitations. (Petition at 78-79; Ex. 2001, ¶106.) Petitioner's combination of Gotou and Karlsson also includes modifying Gotou to remove its moving parts: "Karlsson's controllable LEDs would have simplified controlling the illumination direction and beam shape by removing Gotou's moving parts (e.g., motors), while also providing expanded beam shaping abilities." (Petition at 55; Ex. 2001, ¶106.)

However, removing Gotou's "moving parts" as proposed by Petitioner, would eliminate Gotou's ability to "swing" the lamps prior to a turn, i.e., in a direction that is different from a current steering angle. Instead Gotou, as modified by Petitioner, would be limited to providing front illumination within the revised lighting region (3, 3), as shown in the annotated figure below. (Ex. 2001, ¶107.)

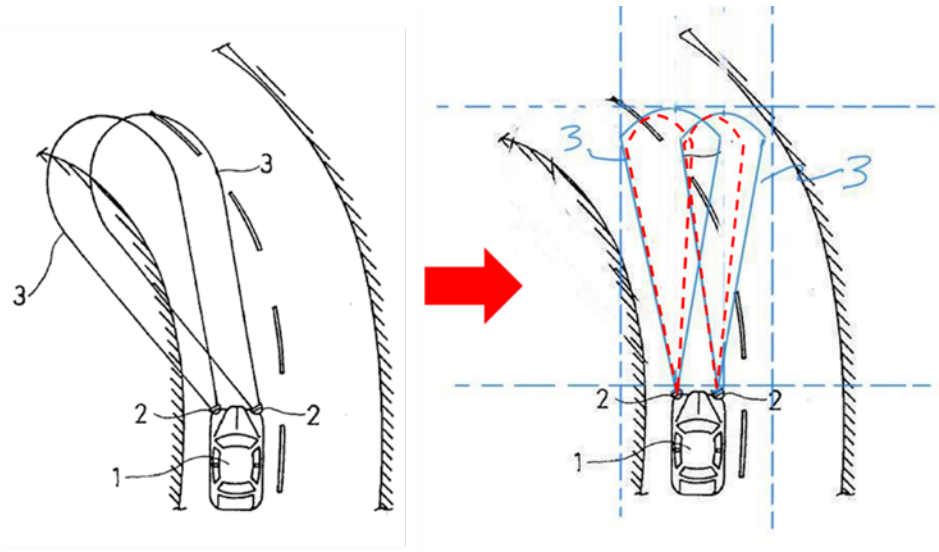

Ex. 1012, Fig. 9 (Annotated)

Petitioner's proposed combination of Gotou and Karlsson, including modifying Gotou to remove its moving parts, does not teach one or more processors to "*control at least a first plurality of the LED light sources to provide light*" "*in a direction of the road curvature ahead of the motor vehicle*" "*based at least in part on the determined light change and prior to the motor vehicle reaching the road curvature*" as claimed. (Ex. 2001, ¶108.) The combination of

Gotou and Karlsson does not teach all claimed features, and claims 1, 12, and 23 are not obvious over the combination. (Ex. 2001, ¶¶106-108.) *See Kinetic Concepts, Inc.,* 688 F.3d 1342, 1361 (Fed. Cir. 2012).

VII. The Board Should Deny Institution on Procedural Grounds

The Board has discretion to deny institution. 35 U.S.C. § 314(a); *see Cuozzo Speed Techs., LLC v. Lee*, 136 S.Ct. 2131, 2140 (2016). The Board's discretion is informed by 35 U.S.C. § 316(b), which requires the Board to consider "the efficient administration of the Office, and the ability of the Office to timely complete proceedings." *See also* Consolidated Trial Practice Guide ("CTPG") at 5.

The Board will consider whether multiple petitions challenging the same patent is fair and efficient, because "[b]ased on the Board's experience, one petition should be sufficient to challenge the claims of a patent in most situations." CTPG at 59. "Two or more petitions filed against the same patent . . . may place a substantial and unnecessary burden on the Board and the patent owner and could raise fairness, timing, and efficiency concerns. *See* 35 U.S.C. § 316(b)." CTPG at 59.

In this case, the Board should exercise its discretion, and deny institution because as explained below: A) the Petition lacks particularity; and B) Petitioner does not identify any material differences between the redundant grounds raised here and the parallel Unified petition, which requires an inefficient use of the

Board's resources. Therefore, the Board should exercise its § 314 discretion and deny institution. 35 U.S.C. § 316(b); 2018 CTPG at 56.

A. The Petition Lacks Particularity under 35 U.S.C. § 312(a)(3)

Under 35 U.S.C. § 312(a)(3), it is Petitioner's burden to adequately explain its challenge and the references it uses. The Petition mischaracterizes teachings in the applied references and combines them in a vague manner to create a LED headlight system that does not and cannot function to provide predictive curve illumination. Petitioner's vague, and often factually incorrect application of the applied references, leaves Patent Owner and the Board in a position where they must venture a guess at how the Petition is interpreting and applying the references. It is not the Board's job nor Patent Owner's to try to make sense of the Petition and Petitioner's ambiguous presentation of the applied references; it was Petitioner's burden from the onset to adequately explain its challenge. As such, the Petition should be denied institution for failing to comply with the statutory requirement.

An IPR petition must identify "with particularity, each ***claim*** challenged, the ***grounds*** on which the challenge to each claim is based, and the ***evidence*** that supports the grounds for the challenge to each claim." 35 U.S.C. § 312(a)(3). "In an IPR, the petitioner has the burden from the onset to show with particularity why the patent it challenges is unpatentable." *Harmonic Inc. v Avid Tech., Inc.*, 815

F.3d 1356, 1363 (Fed. Cir. 2016) citing 35 U.S.C. § 312(a)(3). The PTAB Trial Practice Guide advises that "parties should avoid submitting a repository of all the information that a judge could possibly consider, and instead focus on concise, well-organized, easy-to-follow arguments supported by readily identifiable evidence of record." (CTPG at 39.) Further, "[t]he petition must specify where each element of the claim is found in the prior art patents or printed publications relied upon." 37 C.F.R. § 42.104(b)(4).

"The statutory requirement of particularity in a petition for IPR takes on heightened importance when considered in conjunction with SAS's 'all-or-nothing' approach," and "the Board may consider whether a lack of particularity as to one or more of the asserted grounds justifies denial of an entire petition." *Adaptics LTD. v. Perfect Co*., IPR2018-01596, Paper 20 (PTAB March 6, 2019) (Informative). Further, "where a petition contains voluminous or excessive grounds, Office guidance indicates '[t]he panel will evaluate the challenges and determine whether, in the interests of efficient administration of the Office and integrity of the patent system (*see* 35 USC § 316(b)), the entire petition should be denied under 35 USC § 314(a).'" *Id*. at 18, citing SAS Q&As (June 5, 2018) ("SAS Q&As"), 11 at Part D, Effect of SAS on future challenges that could be denied for statutory reasons, Question D2.

1. The Petition does not specify where each claim element is found in the prior art

Under 37 C.F.R. § 42.104(b)(4), "The petition must specify where each element of the claim is found in the prior art patents or printed publications relied upon." Petitioner challenges claims 1-33 under two separate grounds, yet the language of the Challenged Claims is largely absent from Petitioner's arguments. (Petition at 24-90.) Instead Petitioner's arguments include a claim identifier, e.g., "[1.5]/[12.5]/[23.5]", and often a simple paraphrase of complex claim limitations, without any justification or explanation, inviting the reader to embark on a scavenger hunt to find the corresponding and actual claim limitation in the Claim Appendix. *Compare* Petition at 75 to Appendix A (Petition at 98-116.) Unsurprisingly, such an approach leads to confusion, and claim limitations that are not addressed, and arguments that do not address the actual claim limitations.

a. Petitioner fails to address all claim limitations

For Ground 1, the Petition does not specify where each element of claims 8/19/30 is found in the prior art. (*See* Petition at 50-52.) For Ground 2, the Petition does not address claim limitations [7.1]/[18.1]/[29.1] or [9.4]/[20.4]/[31.4]. *See* Petition at 85, and 88-90, respectively. The Petition does not identify "with particularity, each claim challenged" and therefore should be denied institution under 35 U.S.C. § 312(a)(3).

b. Petitioner's arguments address recharacterized identifiers, not the actual claim limitations

For many claims, Petitioner ignores the actual claim limitation and instead recharacterizes the claim and then analyzes Petitioner's own recharacterization. Petitioner does not offer any claim construction positions to justify ignoring the actual claim limitation. However, such a strategy does allow Petitioner to challenge more claims in the Petition by citing analysis elsewhere. For example, claim 5 requires "*wherein the increase of light in the direction of the road curvature includes at least an increase of light emitted at a level below high-beam light and directed in the direction of the road curvature*." Petitioner ignores virtually all the actual language, and instead characterizes claim 5 as "merely directing any light (other than high-beam) in the direction of the road curvature." (Petition at 43.) Petitioner does not explain how the claim can be reduced to this short-shrift statement, nor does it address the actual claim limitation—that the light that is increased is both: 1) emitted at a level below high-beam level; and 2) directed in the direction of the road curvature. Petitioner takes a similar approach of recharacterizing claims, then analyzing the recharacterization of claims for Ground 1, claim limitations: [1.5]/[12.5]/23.5 (Petition at 36); 5/16/27 (Petition at 43); 7/18/29 (Petition at 48.); 8/19/30 (Petition at 50.); 10/21/32 (Petition at 54); and Ground 2, claim limitations: 1.5/12.5/23.5 (Petition at 75); 5/16/27 (Petition at 84);

7/18/29 (Petition at 85); 8/19/30 (Petition at 86-87); 10/21/32 (Petition at 91). The Petition does not identify "with particularity, each claim challenged" and therefore should be denied institution under 35 U.S.C. § 312(a)(3).

2. The Petition fails to specify the differences between the prior art and the challenged claims

Petitioner frequently cites multiple references for satisfying a single claim limitation or a single set of limitations, without clearly identifying which reference it is relying on. For example, claim limitations [1.4] and [12.4] require "*receive first data, including at least map data, indicating a road curvature upcoming along a road on which the motor vehicle is traveling,*" and claim limitation [23.4] requires "*determining an upcoming shape change of a road, ahead of the motor vehicle, based on first data, including map data, indicating the shape change*."

Petitioner cites Gotou's disclosure at 3:52-67, 4:1-29, 6:40-44, 5:8-6:3, 6:18-7:4, FIGS. 4, 7 for satisfying this limitation, then states that Karlsson "similarly" discloses this limitation:

> Similarly, Karlsson discloses direction sensor 54, intended "for determining when the car 56 is taking a bend, so that the light beam 7 can be adapted to prevent the traffic on the other side of the road from being blinded as much as possible." Ex. 1010, 20:22-32; Ex. 1003, ¶¶274-75.

(Petition at 73-75.)

It is not clear if Petitioner is relying on Gotou, Karlsson, or both, for satisfying this limitation. Additionally, for Ground 1, Petitioner relies on both Beam and Kobayashi for satisfying the following claim limitations: [1.1]/[12.P]/[23.P] (Petition at 32), [1.2]/[12.P]/[23.P] (Petition at 33), [1.3]/[12.P]/[23.P] (Petition at 33), [3]/[14]/[25] (Petition at 41), [4]/[15]/[26] (Petition at 43.), [5]/[16]/[27] (Petition at 43), [10]/[21]/[32] (Petition at 54), and [11]/[22]/[33] (Petition at 54). For Ground 2, Petitioner relies on both Gotou and Karlsson for satisfying the following claim limitations: [1.2]/[12.P]/[23.P] (Petition at 69.), [1.3]/]/[12.P]/[23.P] (Petition at 72), [1.4]/[12.4]/[23.4] (Petition at 75), [1.5]/[12.5]/[23.5] (Petition at 77), [6]/[17]/[28] (Petition at 85), [10]/[21]/[32] (Petition at 91), [11]/[22]/[33] (Petition at 91).

For each of the above limitations, it is not clear which reference Petitioner is relying for satisfying the corresponding claim limitation. This absence of clarity results in Rationales to Combine that are inoperable, undermined, not articulated, and prone to hindsight bias. *See* Section VI. A. Therefore Petitioner fails to "ascertain the differences between the prior art and the claims in issue," as required by *Graham v. John Deere Co*., 383 U.S. 1, 148 USPQ 459 (1966). Instead, Petitioner attempts to shift its burden to the Board and Patent Owner to ascertain the differences and craft the best argument from the uncorrelated cites. By not clearly identifying the reference relied on for each limitation, the Petition does not

identify "with particularity, . . . the ***evidence*** that supports the grounds for the challenge to each claim" and therefore should be denied institution under 35 U.S.C. § 312(a)(3).

B. There is Substantial Overlap Between Unified's Petition and Petitioner's Petition

Unified Patents, LLC filed an IPR petition challenging the '029 Patent in IPR2022-01500 on September 22, 2022. (Ex. 2005, "the '500 IPR Petition".) The '500 IPR Petition includes significant overlap with this Petition. Both Petitions challenge claims 1, 2, 10-13, 23, and 24 of the '029 Patent over Gotou (Ex. 1012.) combined with one or more additional references.

Here, Petitioner combines Gotou with Karlsson. (Ex. 1010.) Whereas the '500 IPR Petition combines Gotou with U.S. 6,406,172 to Harbers (Ex. 2004.) and German Patent DE19923187C2 to Heinz. The Harbers '172 Patent (Ex. 2004.) is equivalent to Harbers (Ex. 1011.), i.e., they share a common specification, as illustrated in Exhibit 2005, which is a comparison of Ex. 1011 and Ex. 2004. Although Petitioner does not expressly rely on Harbers (Ex. 1011.) In its Grounds, Petitioner repeatedly cites to Harbers throughout the Petition to support its obviousness analysis. (*See* Petition at 31, 55, 56, 60, 67.) Petitioner identifies the '500 IPR Petition in its Mandatory Notices but does not explain any material differences between the overlapping grounds. (*See* Petition at 95.) Instead,

Petitioner states that it "independently discovered Gotou months before Unified's petition" and "did not use Unified's petition as a 'roadmap.'" (*Id*. at 94.)

VIII. Conclusion

In light of the remarks herein, Patent Owner respectfully requests that the Board deny Mercedes' Copycat Petition for *inter partes* review of the '029 Patent.

Respectfully submitted,

Dated: October 24, 2023

/ Sangeeta G. Shah /

Sangeeta G. Shah (Reg. No. 38,614)
David S. Bir (Reg. No. 38,383)
Andrew B. Turner (Reg. No. 63,121)
BROOKS KUSHMAN P.C.
1000 Town Center, 22nd Floor
Southfield, MI 48075
(248) 358-4400

Attorneys for Patent Owner

Certificate of Service

The undersigned hereby certifies that the foregoing **PATENT OWNER'S PRELMINARY RESPONSE TO PETITION FOR *INTER PARTES* REVIEW UNDER 37 C.F.R. § 42.107,** including any attachments and exhibits, was served in its entirety on **October 24, 2023** upon the following parties by electronic mail:

LEAD COUNSEL	BACK-UP COUNSEL
Celine Crowson (Reg. No. 40,357) HOGAN LOVELLS US LLP 555 13th Street, N.W. Washington, D.C. 20004 Telephone: (202) 637-5600 Facsimile: (202) 637-5910 celine.crowson@hoganlovells.com	Joseph Raffeto (Reg. No. 66,218) Scott Hughes (Reg. No. 68,385) Ryan Stephenson (Reg. No. 76,608) HOGAN LOVELLS US LLP 555 13th Street, N.W. Washington, D.C. 20004 Telephone: (202) 637-5600 Facsimile: (202) 637-5910 joseph.raffeto@hoganlovells.com scott.hughes@hoganlovells.com ryan.stephenson@hoganlovells.com

Respectfully submitted,

/ Sangeeta G. Shah /

Sangeeta G. Shah (Reg. No. 38,614)
David S. Bir (Reg. No. 38,383)
Andrew B. Turner (Reg. No. 63,121)
BROOKS KUSHMAN P.C.
1000 Town Center, 22nd Floor
Southfield, MI 48075
(248) 358-4400

Attorneys for Patent Owner

Certificate of Compliance Pursuant to 37 C.F.R. § 42.24

This paper complies with the type-volume limitation of 37 C.F.R. § 42.24. The paper contains 13,530 words, excluding the parts of the paper exempted by § 42.24(a).

This paper also complies with the typeface requirements of 37 C.F.R. § 42.6(a)(ii) and the type style requirements of § 42.6(a)(iii)&(iv).

Respectfully submitted,

Dated: October 24, 2023

/ Sangeeta G. Shah /

Sangeeta G. Shah (Reg. No. 38,614)
David S. Bir (Reg. No. 38,383)
Andrew B. Turner (Reg. No. 63,121)
BROOKS KUSHMAN P.C.
1000 Town Center, 22nd Floor
Southfield, MI 48075
(248) 358-4400

Attorneys for Patent Owner