PCT

WORLD INTELLECTUAL PROPERTY ORGANIZATION
International Bureau

INTERNATIONAL APPLICATION PUBLISHED UNDER THE PATENT COOPERATION TREATY (PCT)

(51) International Patent Classification 6 : H03G 3/20, H04B 15/00, H04R 25/00

A1

(11) International Publication Number: WO 00/21194

(43) International Publication Date: 13 April 2000 (13.04.00)

(21) International Application Number: PCT/US99/23234

(22) International Filing Date: 5 October 1999 (05.10.99)

(30) Priority Data:
09/168,101 8 October 1998 (08.10.98) US

(71) Applicant: RESOUND CORPORATION [US/US]; Seaport Centre, 220 Saginaw Drive, Redwood City, CA 94063 (US).

(72) Inventors: PUTHUFF, Steven, H.; 13001 Saratoga–Sunnyvale Road, Saratoga, CA 95070 (US). TAENZER, Jon, C.; 888 Laverne Way, Los Altos, CA 94022–1107 (US). GEDDES, Earl, R.; 1388 Medinah Drive, Itasca, IL 60143 (US).

(74) Agent: KREBS, Robert, E.; Burns, Doane, Swecker & Mathis, LLP, P.O. Box 1404, Alexandria, VA 22313–1404 (US).

(81) Designated States: AU, CA, JP, European patent (AT, BE, CH, CY, DE, DK, ES, FI, FR, GB, GR, IE, IT, LU, MC, NL, PT, SE).

Published
With international search report.

(54) Title: DUAL–SENSOR VOICE TRANSMISSION SYSTEM

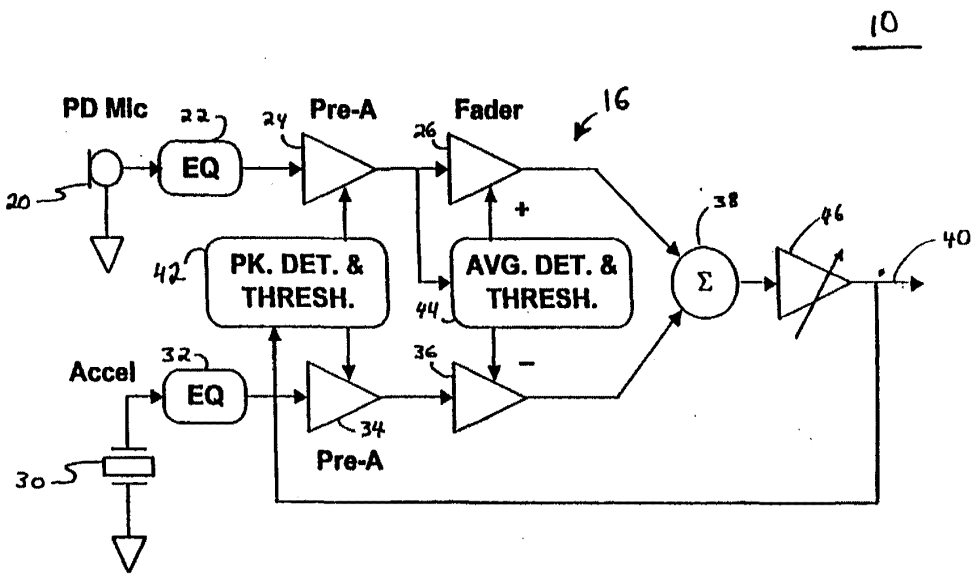

(57) Abstract

A pickup system (10) utilizes both sound pressure disturbances sensed by a microphone (20) and bone conduction sensed by a vibration sensor (30) such as an accelerometer, velocity sensor or displacement sensor to pick up and faithfully transmit a talker's voice despite acoustically noisy ambient environments. The system senses the microphone signal amplitude and adjusts the gain of associated amplification circuitry (23, 26) to effectively and smoothly fade in the microphone signal and fade out the vibration sensor signal as ambient noise increases. The pickup system (10) may be part of a stand alone ear level communication transmitter worn behind the talker's ear, or it may be implemented in a telephone system or other communication systems.

Meta Platforms, Inc. Exhibit 1004
Page i of 47

FOR THE PURPOSES OF INFORMATION ONLY

Codes used to identify States party to the PCT on the front pages of pamphlets publishing international applications under the PCT.

AL	Albania	**ES**	Spain	**LS**	Lesotho	**SI**	Slovenia
AM	Armenia	**FI**	Finland	**LT**	Lithuania	**SK**	Slovakia
AT	Austria	**FR**	France	**LU**	Luxembourg	**SN**	Senegal
AU	Australia	**GA**	Gabon	**LV**	Latvia	**SZ**	Swaziland
AZ	Azerbaijan	**GB**	United Kingdom	**MC**	Monaco	**TD**	Chad
BA	Bosnia and Herzegovina	**GE**	Georgia	**MD**	Republic of Moldova	**TG**	Togo
BB	Barbados	**GH**	Ghana	**MG**	Madagascar	**TJ**	Tajikistan
BE	Belgium	**GN**	Guinea	**MK**	The former Yugoslav Republic of Macedonia	**TM**	Turkmenistan
BF	Burkina Faso	**GR**	Greece			**TR**	Turkey
BG	Bulgaria	**HU**	Hungary	**ML**	Mali	**TT**	Trinidad and Tobago
BJ	Benin	**IE**	Ireland	**MN**	Mongolia	**UA**	Ukraine
BR	Brazil	**IL**	Israel	**MR**	Mauritania	**UG**	Uganda
BY	Belarus	**IS**	Iceland	**MW**	Malawi	**US**	United States of America
CA	Canada	**IT**	Italy	**MX**	Mexico	**UZ**	Uzbekistan
CF	Central African Republic	**JP**	Japan	**NE**	Niger	**VN**	Viet Nam
CG	Congo	**KE**	Kenya	**NL**	Netherlands	**YU**	Yugoslavia
CH	Switzerland	**KG**	Kyrgyzstan	**NO**	Norway	**ZW**	Zimbabwe
CI	Côte d'Ivoire	**KP**	Democratic People's Republic of Korea	**NZ**	New Zealand		
CM	Cameroon			**PL**	Poland		
CN	China	**KR**	Republic of Korea	**PT**	Portugal		
CU	Cuba	**KZ**	Kazakstan	**RO**	Romania		
CZ	Czech Republic	**LC**	Saint Lucia	**RU**	Russian Federation		
DE	Germany	**LI**	Liechtenstein	**SD**	Sudan		
DK	Denmark	**LK**	Sri Lanka	**SE**	Sweden		
EE	Estonia	**LR**	Liberia	**SG**	Singapore		

Meta Platforms, Inc. Exhibit 1004
Page ii of 47

DUAL-SENSOR VOICE TRANSMISSION SYSTEM

BACKGROUND OF THE INVENTION

FIELD OF THE INVENTION

The invention relates to two-way communication devices, and more particularly, to ear level voice pickups used in two-way communications.

DESCRIPTION OF RELATED ART

Existing ear level pickup technology uses a conventional microphone to sense and relay the wearer's voice to a listener at a remote location. The microphone responds to sound signal air pressure disturbances and converts these to a representative electrical signal which is then provided to a transmitter. The transmitter relays the electrical signal, via any appropriate means such as radio waves or telephone lines, to a receiver at a remote location, where the electrical signal is reconverted, using a loud speaker, to an audible sound signal for hearing by the listener at the remote location.

A problem afflicting such systems is their susceptibility to degradation by high ambient noise levels present in the environment. When the pickup wearer is immersed in a noisy environment, the environmental sounds interfere with the talker's voice and, above certain levels, overshadow that voice and frustrate intelligibility at the remote location. As these systems are often targeted for wearers whose lines of work necessitate exposure to high ambient noise levels--e.g., government field agents such as secret service employees assigned to

Meta Platforms, Inc. Exhibit 1004
Page 1 of 47

protect officials and to communicate in the midst of large crowds or during assassination attempts or other crises where panic-struck crowds are particularly noisy or firefighters dispatched to sites of roaring conflagrations, or rescuers beneath a hovering helicopter--it is particularly important that the systems be designed to adequately reject unwanted noise and maintain the requisite functionality permitting clear communication between talker and listener.

One obvious approach to the suppression of ambient noise pickup has been to use a near-field microphone, such as a boom microphone, disposed in close proximity to the talker's mouth. With an appropriate mechanical or electronic microphone configuration, sounds that originate at a distance to the microphone can be de-emphasized, such that only sounds originating in the vicinity of the microphone--i.e., those from the talker's mouth--are picked up for transmission. However, there are disadvantages to such configurations, including the need to place the microphone close to the mouth, thereby detracting from the discreetness and convenience of the device while increasing its size and cost and the number of components used. Additionally, the user of the microphone must rotate the microphone into place before speaking and must be careful not to knock the headset supporting the microphone out of position or off his head during wear. All these problems detract from the utility of the device.

Another known type of sound pickup device relies on bone conduction. It is recognized that a talker's voice reaches the talker's own ear not only through the normal pathway of air pressure waves, but also through conduction by the jaw and other bones of the skull as induced by vibrations from the talker's sound-generating apparatus during speech. Bone conduction involves conveyance of speech-induced vibrations directly to the ear canal, or, for that matter, to any part

of a person's body supported by bone structure. Since the bones provide a direct pathway from the sound source--that is, from the larynx and vocal chords for example--a device which is disposed against suitable bone structures of the talker so as to detect the bone vibrations is able to circumvent a noisy acoustic environment.

Another advantage to bone conduction derives from a talker's natural reaction to high ambient noise levels. Under normal circumstances, bone conduction is a poor medium for high frequency, low energy sound transmission, but is an excellent medium for low frequency, high energy transmission. Raising the level of speech, by louder speaking in reaction to a noisy environment, imparts greater energy to the bones--especially information-bearing consonant energy which normally lies at the higher frequencies and to which, all things being equal, air pressure conduction is normally better suited than bone conduction. The talker, by raising his or her voice, is disproportionately raising the sound level of the consonant component of speech, to which is attributed 80-90% of intelligibility, and is thus naturally compensating for the normally consonant-unfriendly nature of bone conduction by imparting greater energy precisely at the sound frequencies at which bone conduction is poor.

The prior art has used vibration transducers and even accelerometers to detect bone vibration. To that end, throat microphones were first introduced in WWII and worn by bomber pilots who needed to communicate in extremely noisy environments. The throat microphones picked up vibrations at the talker's throat and provided a clearer representation of his voice than a sound pressure microphone, which would have picked up the overshadowing ambient acoustic noise as well. Such devices were crude and the quality of their signal poor.

A device known as the Voiceducer™, manufactured by Tempco™, also takes advantage of bone conduction. It is placed in the user's ear canal and operates to pick up vibrations induced therein by the user's speech apparatus as described above. Similarly, Andrea Electronics™ manufactures a device having two conventional air pressure microphones, each oriented differently from the other, and one of which is designed to pick up air pressure vibrations in the ear canal whose source is in fact due to bone vibration. The dual conversion relied upon by this device produces a further degradation of performance. Other prior art bone conduction pickup apparatus include bone vibration sensors disposed directly atop the user's head, inertial microphones, and ceramic microphones operating without diaphragms.

SUMMARY OF THE INVENTION

The present invention exploits the phenomenon of bone conduction to suppress the deleterious effects of high acoustic noise environments without suffering the degradation of voice pickup quality in low noise environments demonstrated by prior art bone conduction pickup systems. The above-described human speech characteristics are exploited by providing a device which adaptively senses sound through bone conduction when acoustic noise levels are high. As discussed above, bone conduction alone is generally a poor expedient for transfer of intelligible speech, and in an acoustically quiet environment an air pressure microphone is much better suited to picking up a talker's voice. It is only when acoustic noise levels are high that the quality of air pressure microphone detection is degraded enough to make bone conduction a better alternative. The device in accordance with the invention accordingly relies on both bone conduction and air pressure vibration to pick up the talker's voice.

The bone conducted speech is detected using a motion transducer comprising a vibration sensor, and specifically, in a preferred embodiment, an accelerometer, although use of other types of vibration sensors, such as displacement and velocity sensors, is also contemplated. When ambient noise levels are low, sound detection is effected primarily through a conventional microphone, which may comprise, *inter alia*, a directional microphone, a pressure difference microphone or an omni-directional microphone. An adjustable transition circuit is provided for fading out the conventional microphone signal and fading in the bone vibration sensor signal with an increase in ambient noise levels.

The transition circuit, in one embodiment, combines the signals from the microphone and vibration sensor, sensing the average amplitude of the microphone signal and inversely adjusting the gain of pre-amplifiers and/or amplifiers connected to the outputs of the vibration sensor and microphone. As the average amplitude of the microphone signal increases relative to a predetermined threshold, due to increased ambient noise levels, the gain of the vibration sensor is increased while that of the microphone is decreased. Alternatively, the gain adjustment can be controlled by sensing the overall noise level detected by the vibration sensor rather than the microphone. Gain adjustment is effected such that the amplitude of the overall output signal is maintained at a smoothly changing level throughout the transition range.

In a second, preferred embodiment, the signal from the microphone is amplified linearly up to a predetermined level only, after which the signal level is limited and prevented from further increase. The signal from the vibration sensor, initially amplified at a lower gain level than that of the microphone, is not limited and eventually, after the predetermined level, surpasses the limited

Meta Platforms, Inc. Exhibit 1004
Page 5 of 47

microphone signal and comes to dominate, thereby improving system intelligibility and increasing immunity to ambient noise effects. Such a configuration can be implemented using available sound processing circuitry and off-the-shelf technology, at reduced production costs and power consumption requirements.

An additional advantage of the invention is its particular suitability to voice-activated applications, as the bone conduction expedient improves system immunity to false triggering due to noisy environments. The invention realizes power conservation advantages by for example turning off a radio transmitter in the absence of the user's voice.

Yet another advantage of the invention derives from the use of the two modalities of sound transfer--namely, air pressure waves and bone conduction. The two modalities permit the use of signal correlation techniques to enhance the voice signal, thus improving overall system performance. Characteristics of the loudness of speech derived from signals from either or both modalities can be used to control the system of the invention. For example the amplitude envelope of the bone conducted signal can be used to dynamically vary the gain of the microphone amplifier, so that speech portions of the microphone signal are enhanced while noise portions are suppressed. These characteristics include signal RMS value, peak value, average value, and energy level.

The invention finds utility in numerous voice pickup applications, including but not limited to ear level pickups, telephony and dual microphone directional pickup systems.

BRIEF DESCRIPTION OF THE DRAWINGS

Many advantages of the present invention will be apparent to those skilled in the art with a reading of this specification in conjunction with the attached drawings, wherein like reference numerals are applied to like elements and wherein:

FIG. 1 is a schematic diagram of a dual-sensor device in accordance with the invention;

FIG. 2 is a graphical illustration of the signal output of the transducers in one embodiment of the device of FIG. 1;

FIG. 3 is a schematic diagram of a preferred embodiment of a dual-sensor device in accordance with the invention;

FIG. 4 is a graphical illustration of the signal output of the transducers in another embodiment of the device of FIG. 3;

FIG. 5 is a schematic illustration showing an embodiment in accordance with the invention in which selection between the accelerometer and microphone outputs is based on the detected envelopes of the signals;

FIG. 6 is a schematic illustration in which phase correlation of the microphone and accelerometer signals is effected in accordance with the invention;

Meta Platforms, Inc. Exhibit 1004
Page 7 of 47

FIGS. 7 and 8 are graphical illustrations of the use of signal compression and expansion contemplated by exemplary embodiments in accordance with the invention;

FIG. 9 is a schematic illustration of an embodiment in accordance with the invention in which the detected signals are processed by frequency band components;

FIG. 10 is a schematic illustration of an embodiment in accordance with the invention in which variable filtering is used; and

FIG. 11 is a graphical representation of the operation of the circuit of FIG. 10.

DESCRIPTION OF THE PREFERRED EMBODIMENTS

FIG. 1 shows a schematic implementation of a dual-sensor device 10 in accordance with the invention. The device 10 uses an acoustic sound transducer, such as a microphone 20, and an accelerometer 30 whose outputs are selectively manipulated by a processing circuit 16 to compensate for obfuscation of the talker's voice due to the presence of ambient acoustic noise. The device is held against the skin of the talker's skull and may take the form of an ear level pickup worn behind the ear, or a telephone handset held against the ear during telephonic communication. Other possibilities include placement in a hat band or a face mask worn with, for example, a firefighter's helmet.

Microphone 20 may be any conventional acoustic sound transducer such as, e.g., a standard microphone, directional microphone, omni-directional microphone, or pressure difference/gradient microphone or other microphone. Accelerometer 30 is a transducer device which senses the vibratory displacement of the bones in proximity to the ear as imparted primarily by vibrations during speech. The output of accelerometer 30 is a second derivative representation of bone displacement exhibiting, in the frequency domain, a 12 dB/octave rise which matches the approximately 12 dB/octave roll-off of bone conduction speech signals at the ear. It is contemplated that vibration sensors other than accelerometers may be used, and accordingly, use of the latter is not intended to be limiting. For instance, a velocity sensor exhibiting a first derivative rise in the frequency domain of 6 dB/octave can be used preferably with an electronic 6 dB/octave frequency equalization, or similarly, a displacement sensor, may each be used in lieu of accelerometer 30 and also fall within the purview of the invention.

Signals from the transducers 20 and 30 are fed through corresponding equalization circuits 22 and 32, which operate to adjust the frequency response of the transducer signals and provide a flatter frequency response. Equalization circuits 22, 32 can be designed to provide greater gain at higher frequencies than gain at lower frequencies to thereby decrease the "basiness" of the response, especially of accelerometer 30. It is also known that the bony structure of the head imparts certain resonances to the signal, so that the equalization is also intended to correct for those changes in the signal as well.

Variable or adjustable gain pre-amplifiers 24 and 34 are connected to the equalization circuits 22, 32. These pre-amplifiers, along with faders or

amplifiers 26 and 36, serve to control the gain of the signals representing the transducer responses. An adder circuit 38 combines the signals from microphone 20 and accelerometer 30 and provides the output signal 40 as the output signal of the pickup device through variable gain amplifier 46.

In operation, the output from the pre-amplifier 24 is applied to a control circuit 44 comprising for example an amplitude detector which senses the average amplitude of the signal from the microphone 20. When this average amplitude reaches or exceeds a predetermined threshold with a rise in ambient noise levels, the control circuit 44 commences a fading effect, decreasing the gain of amplifier 26 while increasing that of amplifier 36. In this manner, the bone conduction component of the audio signal, comprising primarily the talker's speech, is amplified to a greater extent than the ambient noise signal at high ambient noise levels. At low ambient noise levels, the microphone signal is permitted to dominate as the output signal. The microphone singal under lower ambient noise levels provides a qualitatively better signal despite a measure of equalization applied to the accelerometer signal by equalization circuit 32 to improve the quality thereof. Typically, the value of the threshold will depend on the particular application and may vary anywhere in the range of and beyond 85 - 100 dB SPL (sound pressure level--at 110 dB SPL ambient noise levels, a person is unable to hear his or her own voice), while the transition region is selected to span around 20 dB, although this value is just exemplary, with the actual value being selected based on the particular application. Beyond the cross-over threshold, the signal from the accelerometer 30 will predominate, exceeding the microphone signal by about 20-30 dB, while preceding the threshold, the microphone signal predominates. A graphical representation of the system signal output is depicted in FIG. 2, which shows the microphone signal dominating the

accelerometer signal below a threshold level (shown by the dashed line), while the accelerometer signal dominates above the threshold. The transition region is the region where the transition between these two states occurs. Peak detector 42 is provided to maintain the level of the overall signal constant, operating to adjust the gains of pre-amplifiers 24 and 34 in accordance with the output 40.

In the preferred embodiment in accordance with FIG. 3, a dual-sensor device 50 is shown in which gain control is effected only on the output signal of one of the transducers--the microphone 70. Processing circuit 56 uses existing sound processing circuitry, depicted within the dashed region 60, in conjunction with accelerometer 80, equalization circuit 82, pre-amplifier 84, and adder 76 to provide the enhanced voice pickup device of the invention. Circuit 60 comprises equalization circuit 72, AGC (automatic gain control) amplifier circuit 74 having a specific control circuit (not shown) for controlling the gain thereof, and a bandsplit filter device 78 per known multi-band full dynamic range compression sound processing technology used in, e.g., hearing aid technology and ideally suited for operation at low voltage and current requirements.

The dual-sensor 50 operates as follows. The output of microphone 70 is provided to equalization circuit 72 which again serves to flatten the frequency response for improved quality. The signal is then fed to AGC circuit 74, which is designed to have a gain limiting threshold at around 85 dB SPL. Circuit 74 operates as a linear amplifier, limiting amplification beyond the selected threshold, which in this implementation is 85 dB SPL such that the output signal simply will not become louder with an increase of the input signal. It is to be noted that limiting is different from clipping in that clipping, which eliminates the peaks of the signals above a predetermined threshold, consequently introduces

undesirable distortions of the sound signal. Signal limiters are well known in the art.

By contrast, the gain of pre-amplifier circuit 84 is not limited, and as ambient noise levels increase, the accelerometer signal, unlike the microphone signal, continues to increase. Although initially set at a lower level than that of the microphone signal, the accelerometer signal eventually surpasses that of the microphone when the ambient noise level reaches a sufficient magnitude because the talker naturally raises his voice in order to hear himself. Adder 76 operates to combine the signals, with output from the microphone predominating at the low ambient noise level and the output from the accelerometer predominating at the high ambient noise level. Again, the accelerometer is exemplary and can be any vibration sensor.

The characteristic signal output is graphically represented in FIG. 4. As in the previous embodiment, the microphone signal output dominates at sound levels below the cross-over threshold, while the accelerometer signal dominates at levels above the transition threshold.

The dual-sensor 50 is designed with readily available circuitry and off-the-shelf components. It has minimal voltage and current consumption characteristics and is well-suited for miniaturized, in-the-ear applications as contemplated for ear level pickup devices. Inherent advantages afforded thereby include reduced cost and simplicity of design and assembly, as well as enhanced performance provided by the unique application of the two transducers. Also, as noise increases, the ratio of accelerometer signal to microphone signal improves

Meta Platforms, Inc. Exhibit 1004
Page 12 of 47

i.e., noise output becomes progressively a smaller and smaller portion of output giving a progressively better signal-to-noise ratio.

FIG. 5 shows an embodiment in accordance with the invention in which selection between the accelerometer and microphone outputs is based on the detected envelopes of the signals. Signals from microphone 92 are provided to pre-amplifier 93 and envelope detector 94, while signals from accelerometer 96 are provided to pre-amplifier 97 and envelope detector 98. A switching circuit 95 selects the more variable of these signals. It should be noted that while the noise envelope is nearly constant, the voice envelope is greatly time-varying as noise increases. Consequently, the microphone signal will vary less but the accelerometer signal will continue to vary. In lower noise, microphone signal will vary more than accelerometer signal due to low-pass nature of bone conduction. The envelope detectors 94 and 98 can have short (~10 ms) time constants for selection of individual syllables, or long (~1 s) so gradual selection is made as background noise varies. Additionally, the switching circuit 95 can be replaced preferably with a fader circuit to permit gradual rather than abrupt transitions.

FIG. 6 alternatively shows phase correlation of the microphone and accelerometer signals in accordance with the invention. Signals from the microphone 100 and accelerometer 130 are applied to correlator 120 via pre-amplifiers 110 and 140, respectively, after the phase difference of the accelerometer signal is corrected in phase difference correction circuit 150. By thus correlating the phase corrected signals, either on an average energy basis, instantaneous signal level basis or in individual multi-frequency bands (via Fast Fourier Transformation implemented by digital signal processing, for example),

the correlated components of the signals can be passed to the output, whereas the uncorrelated components can be determined to be noise and prevented from passing to the output. In other words, the determination can be made either on a time-basis only or on both a frequency and time-basis simultaneously.

In an alternative embodiment, AGC amplifier 74 and pre-amp 84 of FIG. 3 can be configured to provide non-linear amplification, controlled by an appropriate control circuit, such that AGC amplifier 74 provides signal compression at a predetermined ratio, while pre-amp 84 provides signal expansion at a predetermined ratio. Various combinations of amplification characteristics relative to a transition threshold can be used. More particularly, as shown in FIG. 7, using the AGC amplifier 74, the microphone signal can be amplified at a linear, 1:1 ratio below the transition threshold and compressed at a N:1 ratio ($N > 1$, e.g., 2.5, 10, etc.) above the transition threshold, while the accelerometer signal, using pre-amplifier 84, is expanded at a 1:M ratio ($M > 1$, e.g., 2 or 1.5, etc.) throughout the operational range. Alternatively, as shown in FIG. 8, the microphone signal can be amplified at a linear 1:1 ratio below the transition threshold and compressed at a N:1 ($N > 1$) ratio above the transition threshold, while the accelerometer signal is expanded at a 1:M ratio ($M > 1$) below the transition threshold and linearly amplified at a 1:1 ratio above the threshold. The amplifiers are designed to produce equal output levels at the transition SPL level. Those skilled in the art will recognize that many different combinations of linear amplification, compression and expansion of the detected signals are possible and would depend on the particular application. Moreover, the transition decision, made by the control circuit, can be linked to any characteristic of one or both detected signals, including RMS values, peak values, average values, signal energy, correlation and variability, again

depending on the particular application contemplated and the physical and economic constraints imposed.

In another embodiment in accordance with the invention and schematically shown in FIG. 9, the signals from the microphone and vibration sensor can be split into high and low frequency bands and then faded separately. In FIG. 9, the signal from microphone 160 is amplified by amplifier 162 and then applied to bandsplit filter 164 serving to split the signal into a high frequency band and a low frequency band. Similarly, the signal from vibration sensor 166 is amplified by amplifier 168 and then applied to bandsplit filter 170 serving to split the signal into high and low frequency bands. Bandsplit filters 164 and 170 preferably have the same critical frequency f_c. The signals are then respectively applied to high frequency and low frequency fader circuits 172 and 174, the outputs of which are summed in adder 176 and provided as the system output. Fader circuits 172 and 174 comprise any circuit discussed above designed to implement the fade over functions between the microphone and the vibration sensor.

The circuit of FIG. 9 is well-suited to exploit the recognized phenomenon that most background acoustic noise--the drone of machinery, the roar of a blazing fire, etc.--lies at the low frequency end of the noise spectrum. By splitting the input signal into low and high frequency band components, fading is effected earlier--i.e., at a lower overall noise intensity level--for the low frequency band component than for the high frequency band component simply because the high frequency band contains less energy than the low frequency band. This maintains more of the high frequency intelligibility which passes through the acoustic path to the microphone 160 while still removing much of the

Meta Platforms, Inc. Exhibit 1004
Page 15 of 47

excess bass noise due to the earlier fade over in the low frequency band to the cleaner bone conduction signal of vibration sensor 166, which preferably comprises an accelerometer.

The detected sound spectrum can be split into more than two bands, each of which is faded at a corresponding intensity level. Digital signal processing techniques readily lend themselves to such an implementation, with Fast Fourier Transform techniques being used in conjunction with suitable algorithms for effecting the fading when the signal intensity at a band exceeds a threshold intensity. The threshold intensity would be determined at the level at which the microphone 160 signal indicates there is so much noise that the voicing is no longer passing through, and the signal in that band would then be faded over to bone conduction from vibration sensor 166. The threshold level would be predetermined and device-specific, depending on the characteristics of the overall system design and the particular application for the device, but would generally be set at about 95 -100 dB SPL noise level.

A particular advantage of such a multi-band processing system is realized when the interfering noise is at specific regions in the noise sound spectrum. Such a case occurs from the whine of an electric motor or the whistle of an air conditioning system for example. In such narrow band situations the noise is not dominated by low frequencies, and thus only the bands in which the narrow band interference occurs are affected. The digital signal processing in accordance with the invention permits only the affected band, or bands, to responsively fade over to the bone conduction signal, without fading other, unaffected bands, thus maintaining the microphone path signal for the band signals where the microphone signal is the cleaner signal.

Meta Platforms, Inc. Exhibit 1004
Page 16 of 47

Another modification, either to the dual band or the multi-band systems described above, relies on the use of variable thresholds in each of the bands, rather than on the fixed threshold described. In each band, the fader moves the cross-over point, using known sliding filters, so that the fading successively slides higher and higher in frequency with increased noise sound level intensity. A similar implementation is shown schematically in FIG. 10, in which a critical frequency f_c control circuit 178 dynamically changes the critical frequencies of sliding high pass filter 180 and sliding low pass filter 182 based on a detected intensity level, in this case the intensity level from the microphone signal from microphone 184. As the background level increases, the system is designed with the presumption that the background noise is louder in the low frequency region than in the high frequency region and has a fairly uniform slope to it, and this characteristic is exploited using a fader circuit which, as the noise level increases, moves the frequency cross-over point of the fade commensurately higher. In other words, at low levels of background noise where the fader circuit begins to operate, only the lowest frequencies are faded over. As the noise level increases, fading gradually begins at the higher frequencies, and with further increases in the noise level the fading operation slides up in frequency, always passing the microphone signal at the highest frequencies and the bone conduction signal at the lowest frequencies until crossover region frequency exceeds the audio band. The operation of such a system is represented graphically in FIG. 11. The signal from microphone 184 is amplified by amplifier 188, while the signal from vibration sensor 186 is amplified by amplifier 190. The signal outputs from sliding filters 180 and 182 are combined in adder 192 to generate the circuit output.

Meta Platforms, Inc. Exhibit 1004
Page 17 of 47

The above are exemplary modes of carrying out the invention and are not intended to be limiting. It will be apparent to those skilled in the art that modifications thereto can be made without departure from the spirit and scope of the invention as set forth by the following claims.

WHAT IS CLAIMED IS:

1. A pickup device for converting a sound signal to an electrical output signal, the pickup device comprising:

an acoustic sound transducer for generating a first electrical signal representative of the sound signal;

a vibration sensor for generating a second electrical signal representative of the sound signal; and

a processing circuit for generating the electrical output signal from the first and second electrical signals.

2. The device of Claim 1, wherein the vibration sensor comprises an accelerometer.

3. The device of Claim 2, wherein the accelerometer exhibits a second derivative rise of about 12 dB/octave.

4. The device of Claim 1, wherein the vibration sensor comprises a velocity sensor.

Meta Platforms, Inc. Exhibit 1004
Page 19 of 47

5. The device of Claim 4, wherein the velocity sensor exhibits a first derivative rise of about 6 dB/octave.

6. The device of Claim 1, wherein the vibration sensor comprises a displacement sensor.

7. The device of Claim 1, wherein the sound transducer comprises a microphone.

8. The device of Claim 1, wherein the processing circuit comprises:

a first amplifier adapted to amplify the first electrical signal to thereby generate a first signal output;

a second amplifier adapted to amplify the second electrical signal to thereby generate a second signal output; and

a control circuit for controlling the gain of at least one of the first and second amplifiers based on a detected characteristic of at least one of the first and second electrical signals.

9. The device of Claim 8, wherein the detected characteristic is average amplitude and wherein the control circuit comprises an average

amplitude detector for detecting the average amplitude of at least one of the first and second electrical signals and adjusting the gain of at least one of the first and second amplifiers in accordance with said detected average amplitude.

10. The device of Claim 8, wherein the detected characteristic is signal peak value and wherein the control circuit comprises a peak value detector for detecting the peak value of at least one of the first and second electrical signals and adjusting the gain of at least one of the first and second amplifiers in accordance with said detected peak value.

11. The device of Claim 8, wherein the detected characteristic is signal RMS value and wherein the control circuit comprises a signal RMS value detector for detecting the RMS value of at least one of the first and second electrical signals and adjusting the gain of at least one of the first and second amplifiers in accordance with said detected RMS value.

12. The device of Claim 8, wherein the detected characteristic is signal energy and wherein the control circuit comprises a signal energy detector for detecting the energy of at least one of the first and second electrical signals and adjusting the gain of at least one of the first and second amplifiers in accordance with said detected energy.

13. The device of Claim 8, wherein the control circuit is adapted, over

Meta Platforms, Inc. Exhibit 1004
Page 21 of 47

a cross-over ambient noise level range, to decrease the gain of the first amplifier and increase the gain of the second amplifier.

14. The device of Claim 13, wherein said increase and decrease are effected when a predetermined threshold is reached.

15. The device of Claim 14, wherein the first signal output is at a level which exceeds a level of the second signal output below said cross-over range and wherein said second signal output is at a level which exceeds the level of the first signal output above said cross-over range.

16. The device of Claim 15, wherein the cross-over range spans about 20 dB.

17. The device of Claim 8, wherein the processing circuit comprises:

first and second adjustable gain pre-amplifiers respectively providing the first and second electrical signals to the first and second amplifiers; and

a peak detector for maintaining the electrical output signal below a predetermined level, the peak detector adjusting the gain of the first and second pre-amplifiers in accordance with a detected peak of the electrical output signal.

18. The device of Claim 17, wherein the peak detector effects said maintaining by comparing the electrical output signal with a predetermined peak threshold.

19. The device of Claim 1, wherein the processing circuit comprises first and second equalization circuits for respectively equalizing frequency responses of the sound transducer and the vibration sensor.

20. The device of Claim 8, wherein the processing circuit comprises an adder for combining the first and second signal outputs to thereby generate said electrical output signal.

21. The device of Claim 8, wherein the control circuit is adapted, over a cross-over ambient noise level range, to decrease the gain of the first amplifier and increase the gain of the second amplifier when a predetermined average amplitude threshold is reached, said average amplitude threshold being in the range of about 85-100 SPL.

22. The device of Claim 1, wherein the processing circuit comprises:

a first amplifier adapted to amplify the first electrical signal to thereby generate a first signal output, the first amplifier having a predetermined gain limit;

a second amplifier adapted to amplify the second electrical signal to thereby generate a second signal output; and

an adder for combining the first and second signal outputs to thereby generate a combined signal.

23. The device of Claim 22, wherein the first and second electrical signals are respectively provided to the first and second amplifiers by first and second equalization circuits adapted to respectively equalize frequency responses of the sound transducer and the vibration sensor.

24. The device of Claim 23, wherein the combined signal is provided to a bandsplit filter.

25. The device of Claim 24, wherein the first amplifier, the equalization circuit and the bandsplit filter are components of a unitary sound processing device.

26. The device of Claim 21, wherein the predetermined gain limit represents a selected ambient noise level.

27. The device of Claim 26, wherein the selected ambient noise level lies within a predetermined transition range containing 85 dB SPL.

28. The device of Claim 27, wherein, below the predetermined transition range, the first signal output exceeds the second signal output, and wherein, above the predetermined transition range, the second signal output exceeds the first signal output.

29. The device of Claim 1, wherein the processing circuit comprises:

a first envelope detector adapted to detect an envelope of the first electrical signal;

a second envelope detector adapted to detect an envelope of the second electrical signal; and

a switching circuit for actively selecting the first and second electrical signals based on outputs of the first and second envelope detectors.

30. The device of Claim 29 wherein the switching circuit comprises a fader.

31. The device of Claim 29, wherein the first and second envelope

detectors have time constants of about 10 ms.

32. The device of Claim 29, wherein the first and second envelope detectors have time constants of about 1 s.

33. The device of Claim 1, wherein the processing circuit comprises:

a phase difference correction circuit for correcting a phase difference between the first and second electrical signals to thereby convert the first and second electrical signal into phase corrected signals; and

a correlator circuit for correlating the phase corrected signals.

34. The device of Claim 33, wherein the correlator circuit correlates the phase corrected signals based on the average energy of the phase corrected signals.

35. The device of Claim 33, wherein the correlator circuit correlates the phase corrected signals based on instantaneous signal levels of the phase corrected signals.

36. The device of Claim 33, wherein the correlator circuit correlates the phase corrected signals based on individual frequency bands of the phase

corrected signals.

37. The device of Claim 1, wherein the processing circuit comprises:

means for splitting the first electrical signal into a plurality of first frequency band components;

means for splitting the second electrical signal into a plurality of second frequency band components each corresponding to an associated first frequency band component;

means for selectively fading between first frequency band components and corresponding second frequency band components; and

an adder for combining the faded frequency band components to thereby generate the electrical output signal.

38. The device of Claim 1, wherein the processing circuit comprises:

first and second sliding filters for respectively filtering the first and second electrical signals, the first and second sliding filters each having a controllable critical frequency f_c;

a critical frequency controller for controlling the critical frequency f_c of each of the first and second sliding filters based on detected sound signal

intensity; and

an adder for combining the filtered first and second electrical signals to thereby generate the electrical output signal.

39. The device of Claim 38, wherein the first sliding filter comprises a sliding highpass filter and the second sliding filter comprises a sliding lowpass filter.

40. The device of Claim 39, wherein the detected sound signal intensity is derived from the first electrical signal.

41. The device of Claim 39, wherein the detected sound signal intensity is derived from the second electrical signal.

42. A method for generating an electrical output signal representative of a talker's voice, said method comprising:

generating a first electrical signal responsive to air pressure disturbances caused by the voice and ambient acoustic noise;

generating a second electrical signal responsive to bone-conducted

sounds caused by the voice; and

combining the first and second electrical signals to thereby generate the electrical output signal.

43. The method of Claim 42, further comprising the steps of:

detecting a predetermined characteristic of at least one of the first and second electrical signals;

amplifying the first and second electrical signals at corresponding first and second amplification gain levels to respectively generate first and second signal outputs; and

selectively controlling the first and second amplification gain levels in accordance with the predetermined characteristic.

44. The method of Claim 43, wherein the predetermined characteristic is the average amplitude of at least one of the first and second electrical signals and wherein the selectively controlling step comprises:

comparing the detected average amplitude with a predetermined amplitude threshold representative of an ambient noise level falling within a predetermined transition range; and

limiting the first amplification gain level to thereby maintain the level of the first signal output above the level of the second signal output when the ambient noise level is below said predetermined cross-over range, and to maintain the level of the second signal output above the level of the first signal output when the ambient noise level is above said predetermined transition range.

45. The device of Claim 44, wherein the ambient noise level is 85 dB SPL and wherein the cross-over range spans 20 dB.

46. The method of Claim 43, wherein the predetermined characteristic is the RMS value of at least one of the first and second electrical signals, and wherein the selectively controlling step comprises:

comparing the detected RMS value with a predetermined threshold representative of an ambient noise level falling within a predetermined transition range; and

adjusting the first and second amplification gain levels to thereby maintain the level of the first signal output above the level of the second signal output when the ambient noise level is below said predetermined cross-over range, and to maintain the level of the second signal output above the level of the first signal output when the ambient noise level is above said predetermined transition range.

47. The method of Claim 43, wherein the predetermined characteristic is the peak value of at least one of the first and second electrical signals, and wherein the selectively controlling step comprises:

comparing the detected peak value with a predetermined amplitude threshold representative of an ambient noise level falling within a predetermined transition range; and

adjusting the first and second amplification gain levels to thereby maintain the level of the first signal output above the level of the second signal output when the ambient noise level is below said predetermined cross-over range, and to maintain the level of the second signal output above the level of the first signal output when the ambient noise level is above said predetermined transition range.

48. The method of Claim 43, wherein the predetermined characteristic is the energy of at least one of the first and second electrical signals, and wherein the selectively controlling step comprises:

comparing the detected energy with a predetermined amplitude threshold representative of an ambient noise level falling within a predetermined transition range; and

adjusting the first and second amplification gain levels to thereby maintain the level of the first signal output above the level of the second signal output when the ambient noise level is below said predetermined cross-over

range, and to maintain the level of the second signal output above the level of the first signal output when the ambient noise level is above said predetermined transition range.

49. The method of Claim 42, wherein the step of generating a first electrical signal is effected using a microphone.

50. The method of Claim 42, wherein the step of generating a second electrical signal is effected using an accelerometer.

51. The method of Claim 42, wherein the step of generating a second electrical signal is effected using a velocity.

52. The method of Claim 42, wherein the step of generating a second electrical signal is effected using a displacement sensor.

53. The method of Claim 43, further comprising the steps of:

generating first and second equalized signals respectively representing the first and second electrical signals;

providing the first and second equalized signals to corresponding first and second adjustable gain pre-amplifiers;

detecting a peak level of the electrical output signal; and

adjusting the gain of the first and second adjustable gain pre-amplifiers to maintain the electrical output signal below a predetermined level.

54. The method of Claim 42, wherein said step of combining comprises using an adder to generate a combined signal.

55. The method of Claim 54, wherein the combined signal is provided to a bandsplit filter.

56. The method of Claim 49, wherein the microphone is a telephone microphone.

57. The method of Claim 49, wherein the microphone is a hearing aid microphone.

58. The method of Claim 42, wherein the first and second electrical signals respectively have first and second characteristic envelopes, the step of combining comprising actively selecting between the first and second signals based on the characteristic envelopes.

59. The method of Claim 58, wherein the step of actively selecting is effected using a fader.

60. The method of Claim 58, wherein the step of combining comprises use of envelope detectors having time constants of about 10 ms.

61. The method of Claim 58, wherein the step of combining comprises use of envelope detectors having time constants of about 1 s.

62. The method of Claim 42, wherein the step of combining comprises:

correcting a phase difference between the first and second electrical signals; and

correlating the phase difference corrected first and second electrical signals.

63. The method of Claim 62, wherein the step of correlating is based on the average energy of the phase corrected signals.

64. The method of Claim 62, wherein the step of correlating is based on instantaneous signal levels of the phase corrected signals.

65. The method of Claim 62, wherein the step of correlating is based on individual frequency bands of the phase corrected signals.

66. The method of Claim 42, wherein the step of combining comprises:

splitting the first electrical signal into a plurality of first frequency band components;

splitting the second electrical signal into a plurality of second frequency band components each corresponding to an associated first frequency band component; and

selectively fading between the first frequency band components and corresponding second frequency band components.

67. The method of Claim 42, further comprising the steps of:

detecting noise intensity; and

dynamically filtering the first and second electrical signals based on the detected noise intensity.

68. The method of Claim 42, wherein the step of detecting comprises detecting the intensity of the first electrical signal, and wherein the step of dynamically filtering comprises applying the first electrical signal to a sliding low pass filter and applying the second electrical signal to a sliding high pass filter.

69. The method of Claim 42, wherein the step of detecting comprises detecting the intensity of the second electrical signal, and wherein the step of dynamically filtering comprises applying the first electrical signal to a sliding low pass filter and applying the second electrical signal to a sliding high pass filter.

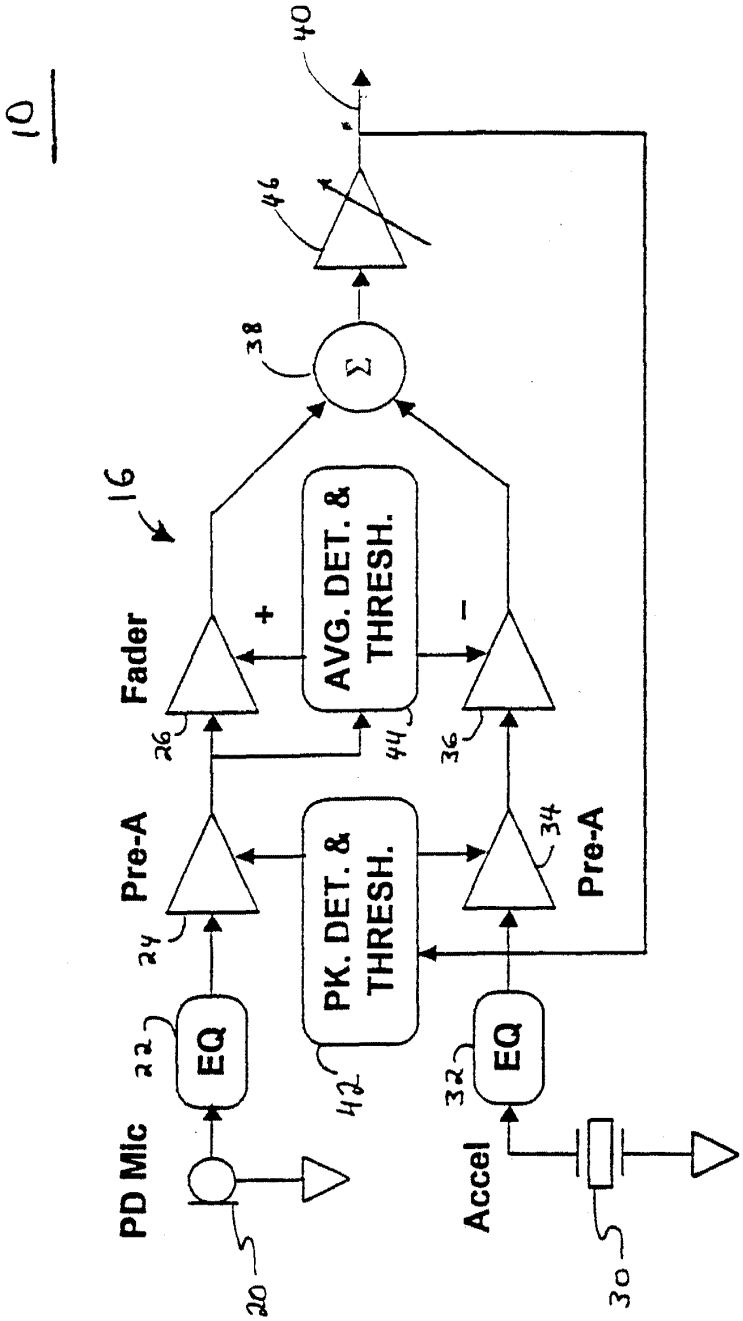

FIG. 1

Meta Platforms, Inc. Exhibit 1004
Page 37 of 47

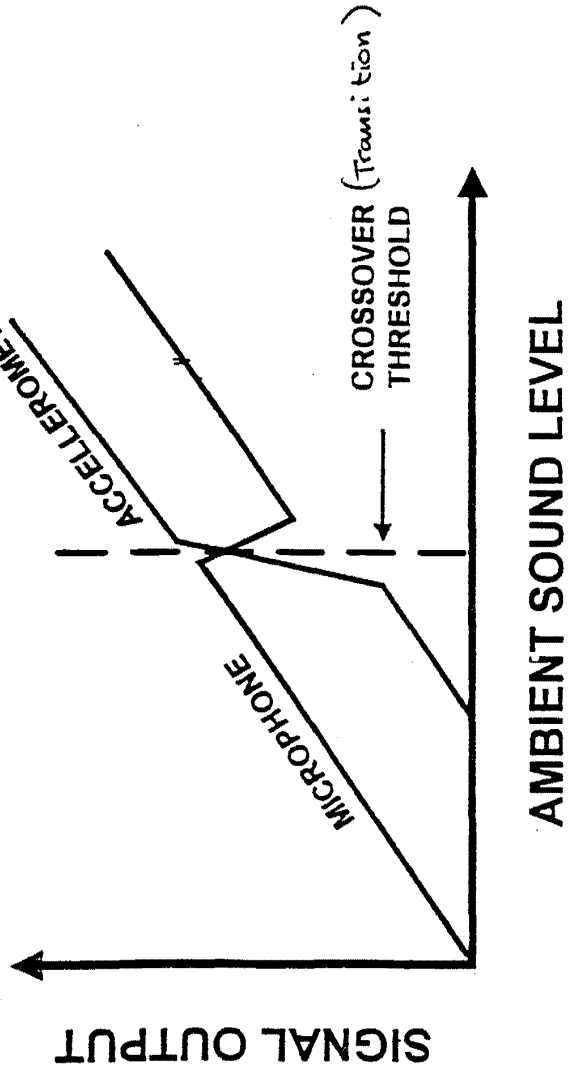

FIG. 2

Meta Platforms, Inc. Exhibit 1004
Page 38 of 47

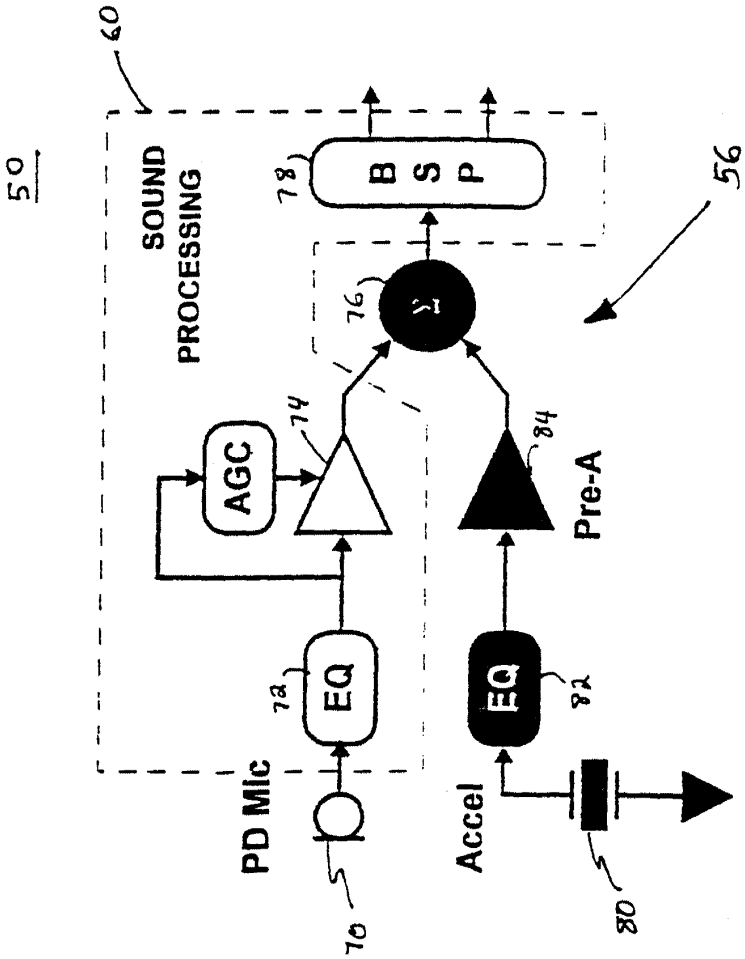

FIG. 3

Meta Platforms, Inc. Exhibit 1004
Page 39 of 47

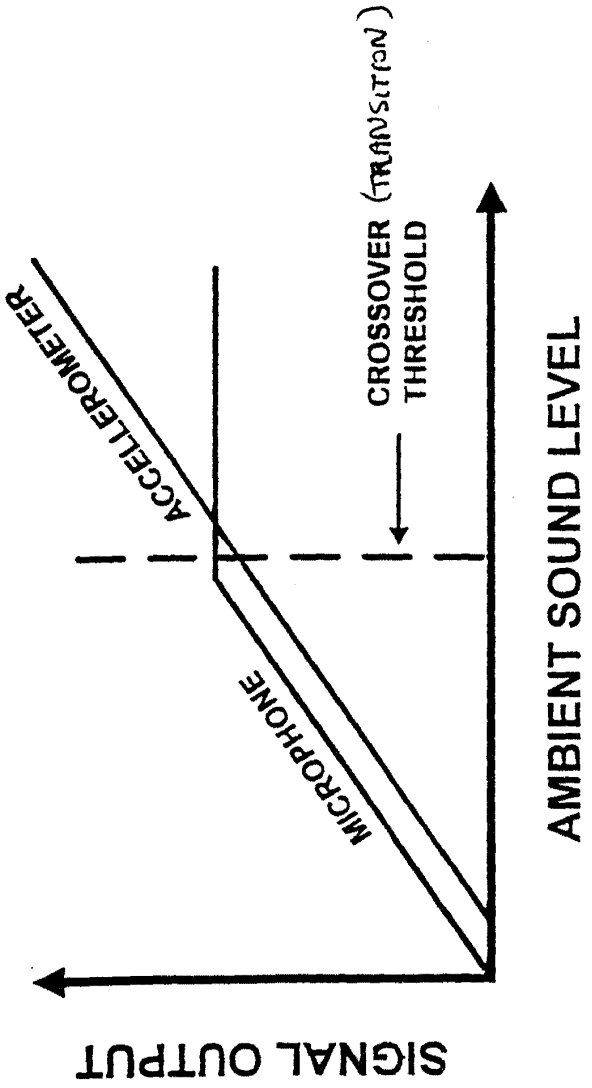

FIG. 4

Meta Platforms, Inc. Exhibit 1004
Page 40 of 47

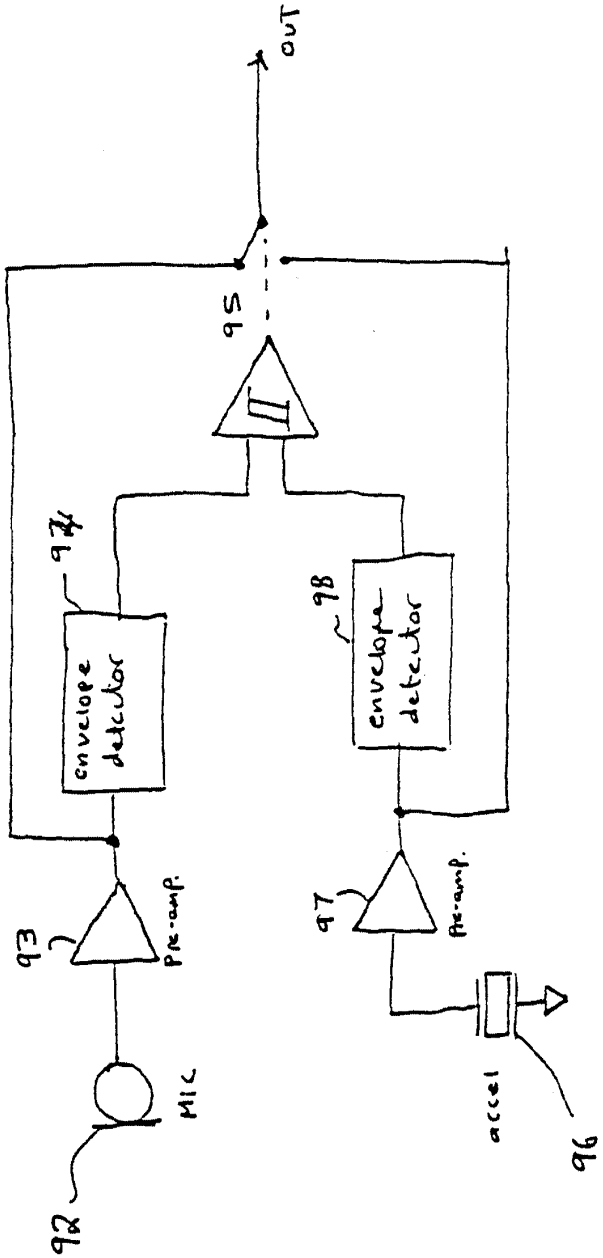

FIG. 5

Meta Platforms, Inc. Exhibit 1004
Page 41 of 47

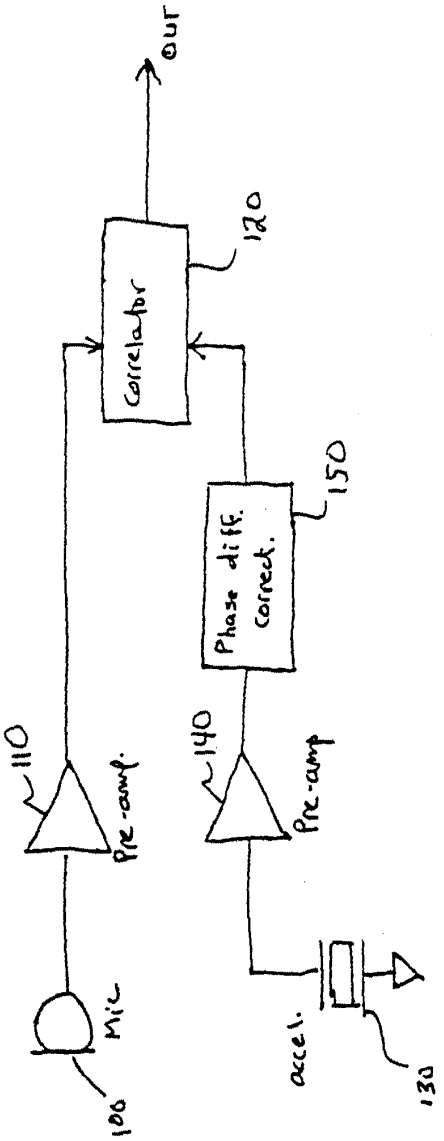

FIG. 6

Meta Platforms, Inc. Exhibit 1004
Page 42 of 47

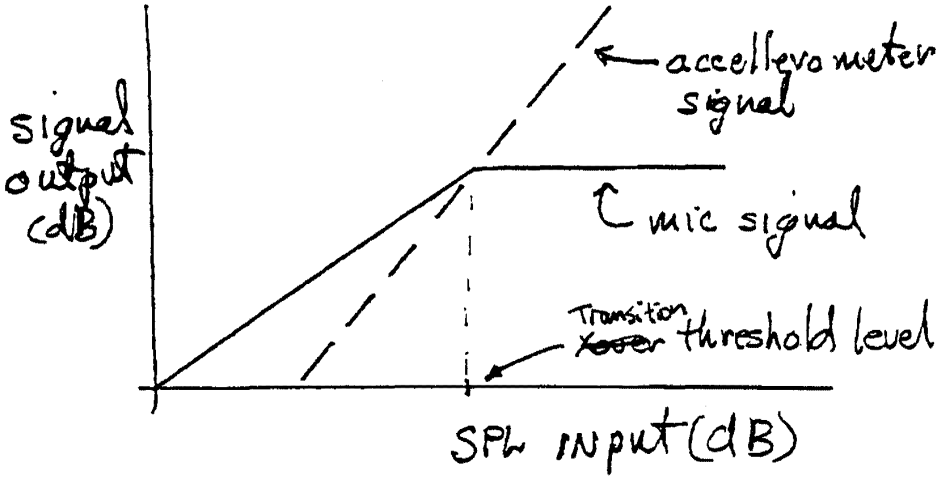

FIG. 7

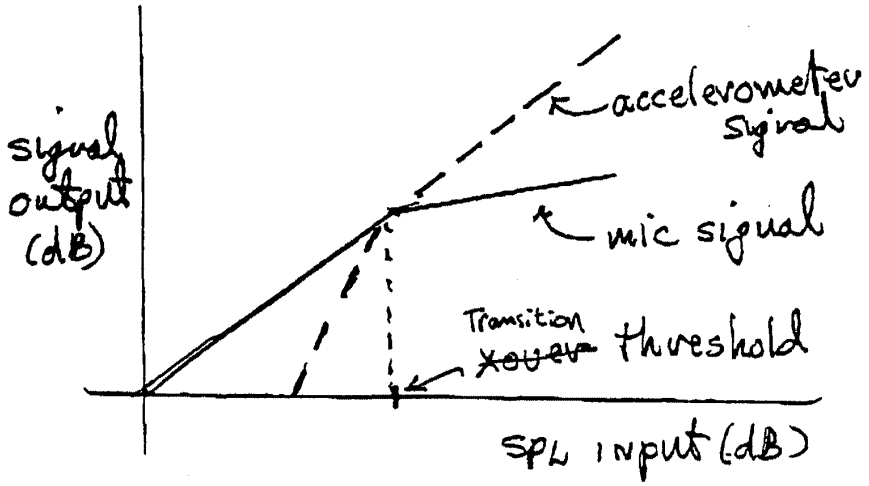

FIG. 8

Meta Platforms, Inc. Exhibit 1004
Page 43 of 47

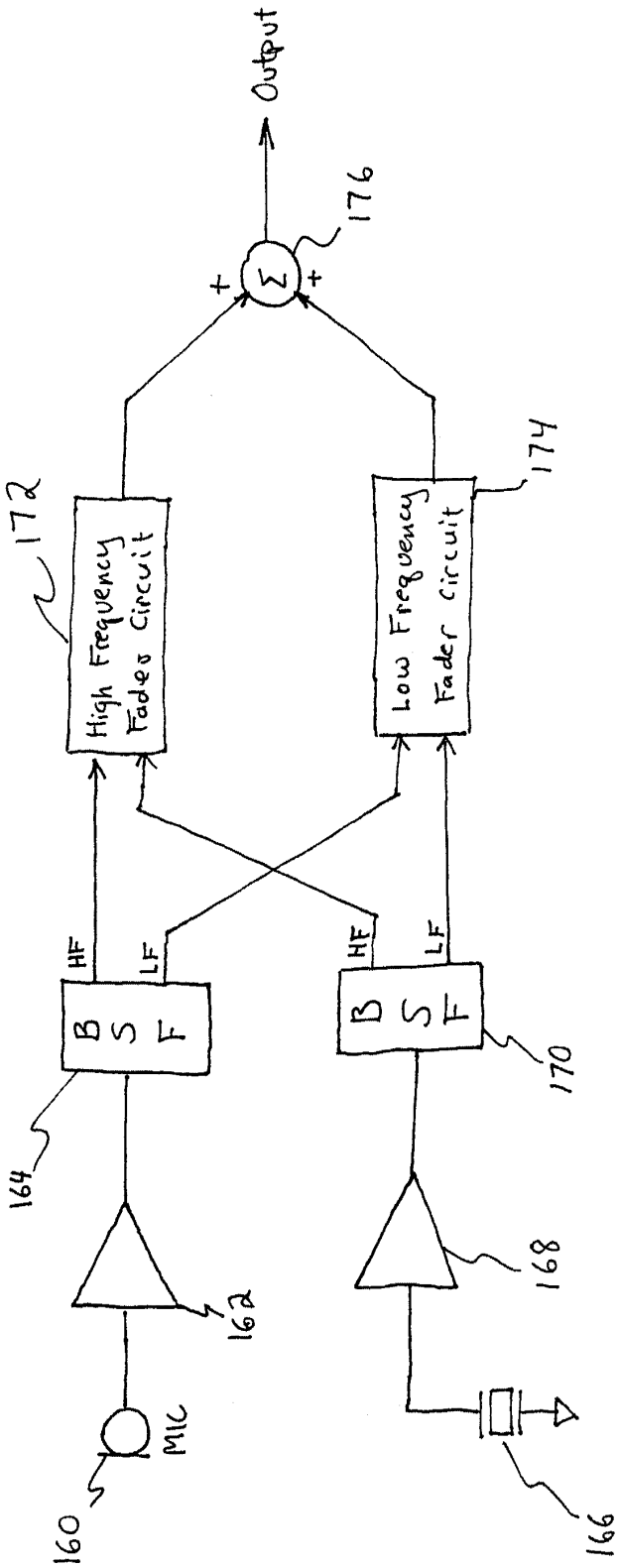

FIG. 9

Meta Platforms, Inc. Exhibit 1004
Page 44 of 47

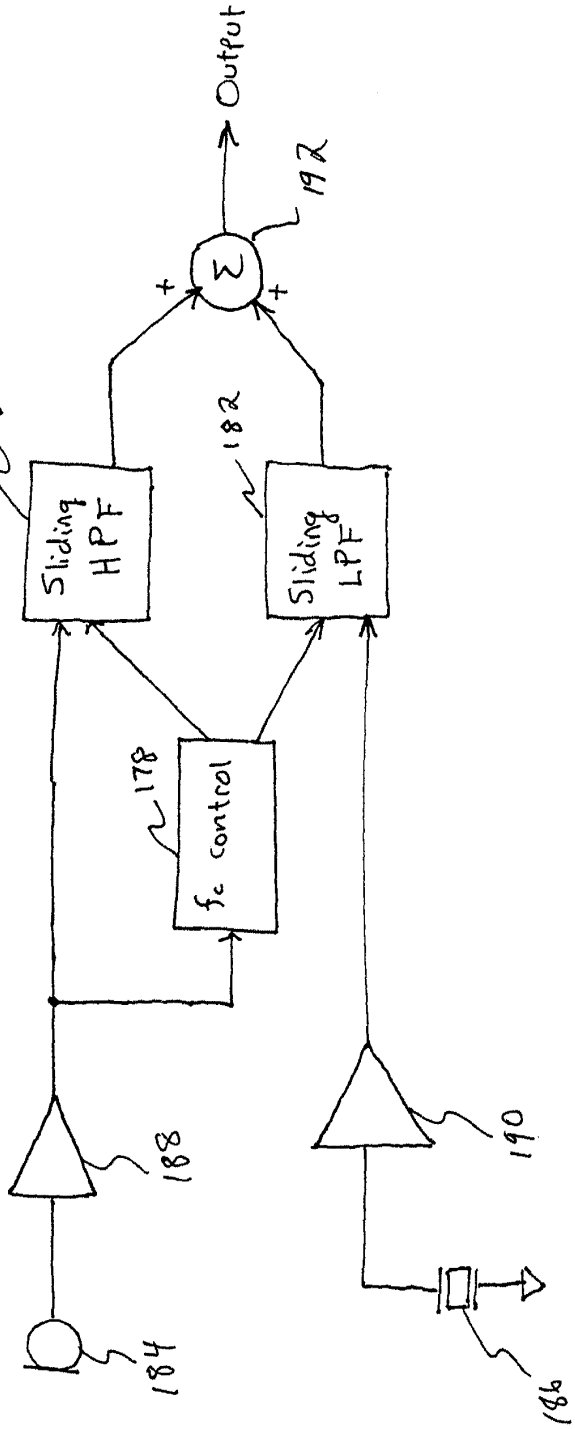

FIG. 10

Meta Platforms, Inc. Exhibit 1004
Page 45 of 47

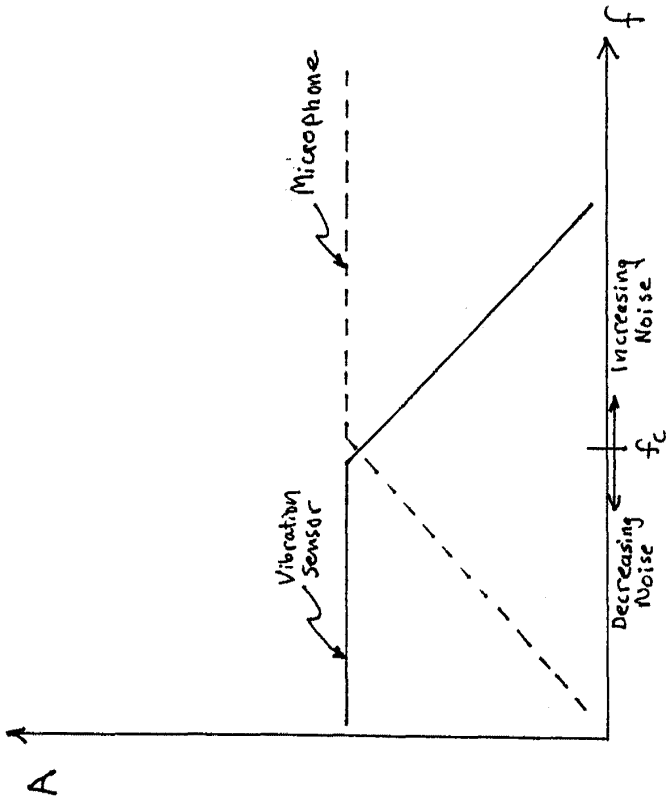

FIG. 11

Meta Platforms, Inc. Exhibit 1004
Page 46 of 47

INTERNATIONAL SEARCH REPORT

International application No.
PCT/US99/23234

A. CLASSIFICATION OF SUBJECT MATTER

IPC(6) :H03G 3/20; H04B 15/00; H04R 25/00
US CL :381/57, 94.7, 317
According to International Patent Classification (IPC) or to both national classification and IPC

B. FIELDS SEARCHED

Minimum documentation searched (classification system followed by classification symbols)

U.S. : 381/57, 94.7, 317, 91, 92, 312, 91, 94,9, 178, 170, 330

Documentation searched other than minimum documentation to the extent that such documents are included in the fields searched

Electronic data base consulted during the international search (name of data base and, where practicable, search terms used)

C. DOCUMENTS CONSIDERED TO BE RELEVANT

Category*	Citation of document, with indication, where appropriate, of the relevant passages	Relevant to claim No.
X	US 5,363,452 A (ANDERSON) 08 November 1994, abstract.	1, 42.
X	US 4,442,323 A (YOSHIDA et al) 10 April 1984, abstract.	1, 42
X	US 5,692,059 A (KRUGER) 25 November 1997, abstract.	1, 42

☐ Further documents are listed in the continuation of Box C. ☐ See patent family annex.

*	Special categories of cited documents:	"T"	later document published after the international filing date or priority date and not in conflict with the application but cited to understand the principle or theory underlying the invention
"A"	document defining the general state of the art which is not considered to be of particular relevance	"X"	document of particular relevance; the claimed invention cannot be considered novel or cannot be considered to involve an inventive step when the document is taken alone
"E"	earlier document published on or after the international filing date	"Y"	document of particular relevance; the claimed invention cannot be considered to involve an inventive step when the document is combined with one or more other such documents, such combination being obvious to a person skilled in the art
"L"	document which may throw doubts on priority claim(s) or which is cited to establish the publication date of another citation or other special reason (as specified)	"&"	document member of the same patent family
"O"	document referring to an oral disclosure, use, exhibition or other means		
"P"	document published prior to the international filing date but later than the priority date claimed		

Date of the actual completion of the international search 22 NOVEMBER 1999	Date of mailing of the international search report 19 JAN 2000
Name and mailing address of the ISA/US Commissioner of Patents and Trademarks Box PCT Washington, D.C. 20231 Facsimile No. (703) 305-3230	Authorized officer PING LEE Telephone No. (703)305-3900

Form PCT/ISA/210 (second sheet)(July 1992)★