Paper No. __
Filed: July 5, 2023

UNITED STATES PATENT AND TRADEMARK OFFICE

BEFORE THE PATENT TRIAL AND APPEAL BOARD

LG ELECTRONICS INC.,
Petitioner,

v.

JAWBONE INNOVATIONS, LLC,
Patent Owner.

IPR2023-01154
U.S. Patent No. 8,019,091

PETITION FOR *INTER PARTES* REVIEW OF CLAIMS 1-20 OF U.S. PATENT NO. 8,019,091

TABLE OF CONTENTS

INTRODUCTION 1

I. BACKGROUND 3

A. Noise Reduction Using Transfer Functions Was Known. 3

B. Tissue Vibration Sensors for Voice Detection Were Known. 8

II. THE '091 PATENT 8

A. Overview 8

B. Prosecution History 11

III. STATEMENT OF RELIEF REQUESTED 11

A. Grounds 11

B. The References Are Prior Art. 11

C. The Asserted References Are Analogous Art. 12

IV. LEVEL OF ORDINARY SKILL 13

V. CLAIM CONSTRUCTION 13

VI. GROUNDS OF UNPATENTABILITY 14

A. Ground 1: Ikeda and Puthuff 14

1. Claim 11 14

a. Preamble 14

b. Two-Microphone Receiver 14

c. Processor that Generates First and Second Transfer Functions 16

i. First Transfer Function 19

ii. Second Transfer Function 25

d. Noise Removal 28

e. Vibration Sensor 30

i. Motivation to Combine 31

2. Claim 12 36

3. Claim 13 36

4. Claim 14 36

5. Claim 16 37

6. Claim 18 37

7. Claim 19 38

8. Claim 20 39

9. Claim 1 40

a. Preamble 40

b. Receiving Acoustic Signals 40

c. Sensing Vibrations 40

d. Generating a VAD Signal 41

e. Generating Transfer Functions 42

f. Removing Noise 44

10. Claim 2 44

a. Generating One Transfer Function 44

b. Removing Noise 44

11. Claim 3 44

12. Claim 4 45

13. Claim 5 46

14. Claim 6 47

15. Claim 7 47

16. Claim 8 47

B. Ground 2: Ikeda and Alcivar 47

1. Claim 11 47

a. Vibration Sensor 47

b. Motivation to Combine 49

2. Claim 12 51

3. Claim 13 52

4. Claim 14 52

5. Claim 18 52

6. Claim 20 52

7. Claim 1 53

a. Generating a VAD Signal 53

b. Generating Transfer Functions 54

8. Claim 3 54

9. Claims 6-8 55

C. Ground 3: Ikeda, Puthuff or Alcivar, and Hussain 55

1. Claim 3 56

2. Claims 9 and 15 57

a. Dividing Acoustic Data into Sub-bands 57

b. Generating a Sub-band Transfer Function 58

c. Removing Acoustic Noise 59

d. Combining Sub-band Signals 59

3. Motivation to Combine 60

4. Hussain Was Publicly Available. 62

D. Ground 4: Ikeda, Puthuff or Alcivar, and Sasaki 63

1. Claims 10 and 17 63

2. Motivation to Combine 64

E. Ground 5: Grounds 1-4 References and Bartlett 66

VII. SECONDARY CONSIDERATIONS OF NONOBVIOUSNESS 68

VIII. DISCRETIONARY DENIAL UNDER §314(A) IS NOT APPROPRIATE. 68

A. Co-Pending Litigation (*Fintiv*) 69

1. Factor 1: Potential Stay 69

2. Factor 2: Proximity of Trial to FWD 69

3. Factor 3: Investment in Parallel Proceeding 70

4. Factor 4: Overlapping Issues 70

5. Factor 5: The Parties 72

6. Factor 6: Other Circumstances 72

B. Prior Petitions for *Inter Partes* Review (*General Plastic*) 73

IX. DISCRETIONARY DENIAL UNDER §325(D) IS NOT APPROPRIATE. 73

X. MANDATORY NOTICES 75

A. Real Parties-In-Interest (37 C.F.R. §42.8(b)(1)) 75

B. Related Matters (37 C.F.R. §42.8(b)(2)) 75

C. Lead and Backup Counsel (37 C.F.R. §42.8(b)(3)) 77

D. Service Information (37 C.F.R. §42.8(b)(4)) 77

E. Payment of Fees (37 C.F.R. §42.103) 78

F. Grounds for Standing (37 C.F.R. §42.104(a)).....78

CONCLUSION 78

CERTIFICATE OF COMPLIANCE 79

CERTIFICATE OF SERVICE 80

TABLE OF AUTHORITIES

Cases: ***Page(s):***

Amazon.com, Inc. v. Jawbone Innovations, LLC, IPR2023-00253, Paper 9 (P.T.A.B. June 6, 2023) 3, 69, 72, 73

Apple v. Fintiv, IPR2020-00019, Paper 11 (P.T.A.B. Mar. 20, 2020) 69, 72

Cal. Inst. of Tech. v. Broadcom Ltd., 25 F.4th 976 (Fed. Cir. 2022) 71

Celltrion, Inc. v. Genentech, Inc., IPR2018-01019, Paper 11 (P.T.A.B. Oct. 30, 2018) 73

GAF Materials LLC v. Kirsch Research and Dev., LLC, IPR2021-00192, Paper 14 (P.T.A.B. May 25, 2021) 70

General Plastic Indus. Co., Ltd. v. Canon Kabushiki Kaisha, IPR2016-01357, Paper 19 (P.T.A.B. Sept. 6, 2017) 73

*Global Tel*Link Corp. v. HLFIP Holding, Inc.*, IPR 2021-00444, Paper 14 (P.T.A.B. Jul. 22, 2021) 70

Google LLC v. Jawbone Innovations, LLC, IPR2022-00630, Paper 10 (P.T.A.B. Sept. 13, 2022) 71, 72

Google LLC v. Jawbone Innovations, LLC, IPR2022-00649*,* Paper 13 (P.T.A.B. Oct. 31, 2022) 69, 72, 73

In re GPAC Inc., 57 F.3d 1573 (Fed. Cir. 1995) 12

KSR Int'l Co. v. Teleflex Inc., 550 U.S. 398 (2007) ..... *passim*

Leapfrog Enters. v. Fisher-Price, Inc., 485 F.3d 1157 (Fed. Cir. 2007) 68

Mercedes-Benz USA, LLC v. Carucel Invs. L.P., IPR2019-01404, Paper 12 (P.T.A.B. Jan. 22, 2020) 74

NetNut Ltd. v. Bright Data Ltd.,
IPR2021-00465, Paper 11 (P.T.A.B. Aug. 12, 2021) 73

Newell Cos. v. Kenney Mfg. Co.,
864 F.2d 757 (Fed. Cir. 1988) 68

Nidec Motor Corp. v. Zhongshan Broad Ocean Motor Co. Ltd.,
868 F.3d 1013 (Fed. Cir. 2017) 14

Samsung Elecs. Am. Inc. v. Snik LLC,
IPR2020-01428, Paper 10 (P.T.A.B. Mar. 9, 2021) 71

Sand Revolution II, LLC v. Cont'l Intermodal Grp.-Trucking LLC,
IPR-2019-01393, Paper 24 (P.T.A.B. June 16, 2020) 71

Toshiba Am. Info. Sys., Inc. v. Walletex Microelecs. Ltd.,
IPR2018-01538, Paper 11 (P.T.A.B. Mar. 5, 2019) 74

Uniloc 2017 LLC v. Samsung Elecs. Am., Inc.,
No. 2:19-cv-00259-JRG-RSP, 2020 WL 1433960
(E.D. Tex. Mar. 24, 2020) 69

Unwired Planet, LLC v. Google Inc.,
841 F.3d 995 (Fed. Cir. 2016) 12

Vivid Techs., Inc. v. Am. Sci. & Eng'g, Inc.,
200 F.3d 795 (Fed. Cir. 1999) 14

Statutes and Rules

35 U.S.C. §102 12

35 U.S.C. §103 13

35 U.S.C. §112 13

35 U.S.C. §314 68

35 U.S.C. §325 75

TABLE OF EXHIBITS

Exhibit No.	Description
1001	U.S. Patent No. 8,019,091 ("the '091 patent")
1002	Declaration of Richard M. Stern, Ph.D.
1003	U.S. Patent No. 5,978,824 ("Ikeda")
1004	International Patent Publ. No. WO2000/021194 ("Puthuff")
1005	U.S. Patent No. 3,746,789 ("Alcivar")
1006	U.S. Patent No. 5,473,684 ("Bartlett")
1007	Amir Hussain et al., *A New Metric for Selecting Sub-Band Processing in Adaptive Speech Enhancement Systems*, Proc. 5th Eur. Conf. on Speech Comm'n and Tech. (Eurospeech '97) 2611-14 ("Hussain")
1008	U.S. Patent No. 5,471,538 ("Sasaki")
1009	U.S. Provisional Patent Application No. 60/219,297
1010	Bernard Widrow et al., *Adaptive Noise Cancelling: Principles and Applications*, 63 Proc. IEEE 12 (1975) ("Widrow 1975")
1011	Bernard Widrow et al., *Adaptive Signal Processing* (1985) ("Widrow 1985")
1012	U.S. Patent No. 6,349,197 ("Oestreich")
1013	Excerpts from the '091 patent's file history
1014	Curriculum Vitae of Richard M. Stern, Ph.D.
1015	Declaration of Carol S. Peterson
1016	*Eurospeech '97 Index Page*, Internet Archive, https://web.archive.org/web/19971211204358/http://www.cti.gr/~ee-www/ Index.htm (archived Dec. 11, 1997)

Exhibit No.	Description
1017	*Eurospeech '97 Table of Contents and Abstracts from "Session ThAA Noise Mitigation, Speech Enhancement II"*, Internet Archive, https://web.archive.org/web/20000311093614/http://www.wcl2.ee.upatras.gr/eurthaa.html (archived Oct. 21, 1999)
1018	International Speech Communication Association, *Proceedings Order Form*, Internet Archive, https://web.archive.org/web/20000607171217/http://www.iscaspeech.org/proc_order.html (archived June 7, 2000)
1019	*Eurospeech '97 Technical Programme*, Internet Archive, https://web.archive.org/web/19971211205519/http://www.cti.gr/~ee-www/Progr.htm (archived Dec. 11, 1997)

Petitioner LG Electronics Inc. ("LGE" or "Petitioner") requests *inter partes* review ("IPR") of claims 1-20 of U.S. Patent No. 8,019,091 ("the '091 patent"), which Jawbone Innovations, LLC ("Patent Owner" or "PO") purportedly owns.

INTRODUCTION

The '091 patent's claims recite systems and methods for reducing noise in acoustic signals such as human speech. The system comprises two microphones and a processor. The processor receives acoustic signals from the microphones and calculates transfer functions based on whether voicing activity is detected. The processor uses the transfer functions to remove noise from the acoustic signals.

As the inventors admitted in their provisional application, this system was entirely conventional. Indeed, it reflected "[o]ne of the most common acoustic only … adaptive noise removal algorithms" and the associated transfer functions could be calculated via "any techniques used by those skilled in the art[.]" (Ex. 1009, 1, 5.) The conventional two-microphone noise removal system, with known transfer functions $H_1(n)$ and $H_2(n)$, is shown in Figure 1 of the provisional application:

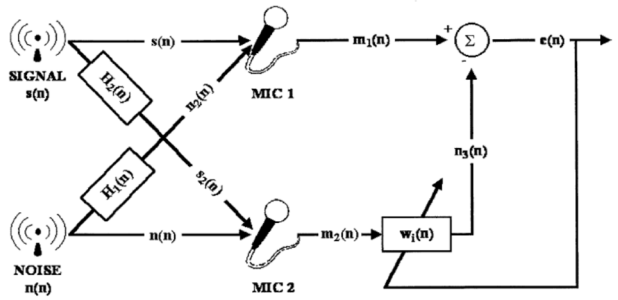

(*Id.*, Fig. 1.) The conventional system "updates its noise parameters" by recalculating the transfer functions "during unvoiced periods." (*Id.*, 1.) This system allegedly did "not work well on random noise or non-stationary noise." (*Id.*)

The purported invention in the '091 patent is the addition of a non-acoustic sensor, such as an accelerometer, to determine when voicing activity is occurring by sensing tissue vibrations associated with human speech. (*Id.* (distinguishing the invention because it uses "both acoustic and other information").) Thus, rather than using the microphone signals to determine periods of voice activity (to determine when the transfer functions should be updated), the patent uses a separate sensor as a voice activity detector ("VAD"). This is shown in Figure 2 of the '091 patent:

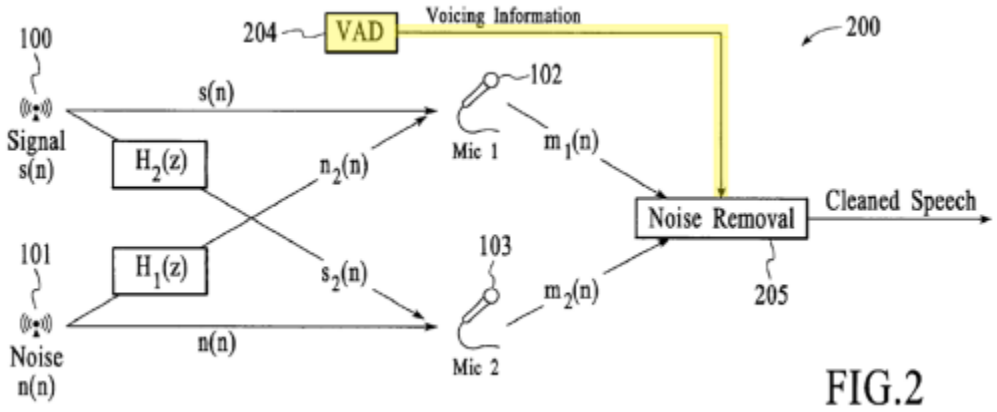

FIG.2

(Ex. 1001, Fig. 2.)[1] But the use of non-acoustic sensors, such as accelerometers, to detect voicing activity was not inventive either. Such sensors had been known for

[1] Figures have been highlighted for clarity.

decades and were commonly used for exactly this purpose: to determine the presence of voicing activity.

The ’091 patent therefore attempts to remove from the public store of knowledge acoustic signal processing systems and methods—including conventional microphone systems and conventional VADs—that have long been known and used in the art. The inventors did not invent any new microphone, VAD, processor, transfer function, or system. The claims recite merely well-known components used in their conventional manner, i.e., in ways that were known and obvious to those of ordinary skill in the art. Thus, the Board should cancel the claims.

I. BACKGROUND[2]

A. Noise Reduction Using Transfer Functions Was Known.

Two-microphone systems that adaptively remove noise using transfer functions have been used for decades. For example, in 1975, Widrow described a dual microphone noise-reduction system that used an adaptive filter for generating a “transfer function” to remove noise from acoustic signals such as speech. (Ex.

[2] Sections I-VII of this petition are substantively identical to the corresponding sections of the petition in *Amazon.com, Inc. v. Jawbone Innovations, LLC*, IPR2023-00253, Paper 1 (P.T.A.B. Nov. 22, 2022), which Petitioner seeks to join pursuant to the motion for joinder and consolidation filed concurrently herewith.

1010, 1695-1701, 1704-05, Figs. 3-6, 18-19.) Widrow described a similar system again in a 1985 textbook. (Ex. 1011, ch. 12; Ex. 1002 ¶31.)

In 1999, Ikeda disclosed a two-microphone noise canceling system having an adaptive filter. (Ex. 1003, 1:4-8.) Ikeda first describes and shows a "conventional" two-microphone noise cancellation system:

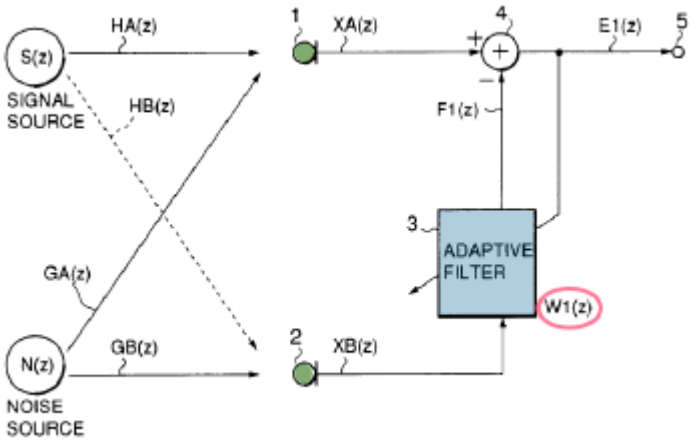

(Ex. 1003, Fig. 5 ("Prior Art"); *id.*, 1:42-43, 3:32-36.)

Ikeda explains that each of the two microphones (1, 2) receives both the speech signal (S(z)) and the noise signal (N(z)), and that the acoustic paths have various transfer characteristics. (*Id.*, 1:46-59, 2:46-50, Fig. 5.) The system includes an adaptive filter 3 having a transfer function (also referred to as a "transfer characteristic") W1(z). (*Id.*, 2:3-5; Ex. 1002 ¶¶43-45.)

Ikeda further discloses that it was conventional to add a second adaptive filter 6 having a second transfer function W2(z) to correct for distortion that occurs in two microphone systems:

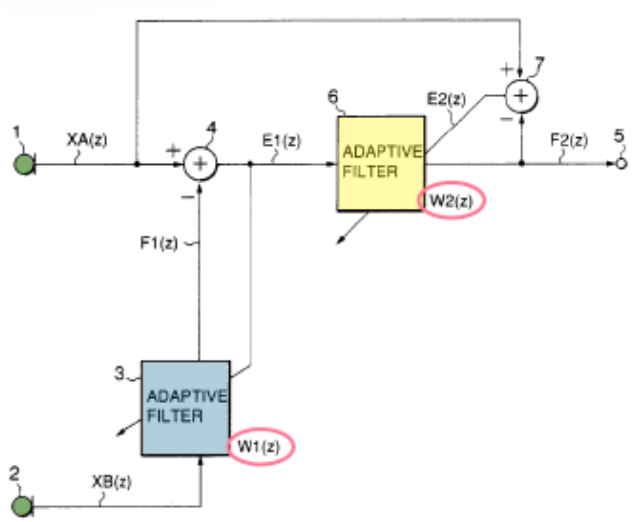

(*Id.*, Fig. 6 ("Prior Art"), 2:46-3:31.)

Ikeda discloses that it was known in the art that the first transfer function, W1(z), is generated when voice is absent while the second transfer function, W2(z), is generated when voice is present. (*Id.*, 3:32-45, 2:60-3:10.) As a result, it is "necessary to detect" when the voice signal is present or absent. (*Id.*, 3:32-45.) The system's performance therefore depends on adequate voice detection. (*Id.*; Ex. 1002 ¶¶46-47.)

Ikeda then describes an improved system, shown in its Figure 1, that uses the two microphones (1, 2), two adaptive filters (3, 6), and two transfer functions (W1(z), W2(z)), and further includes a voice activity detector (shown in purple):

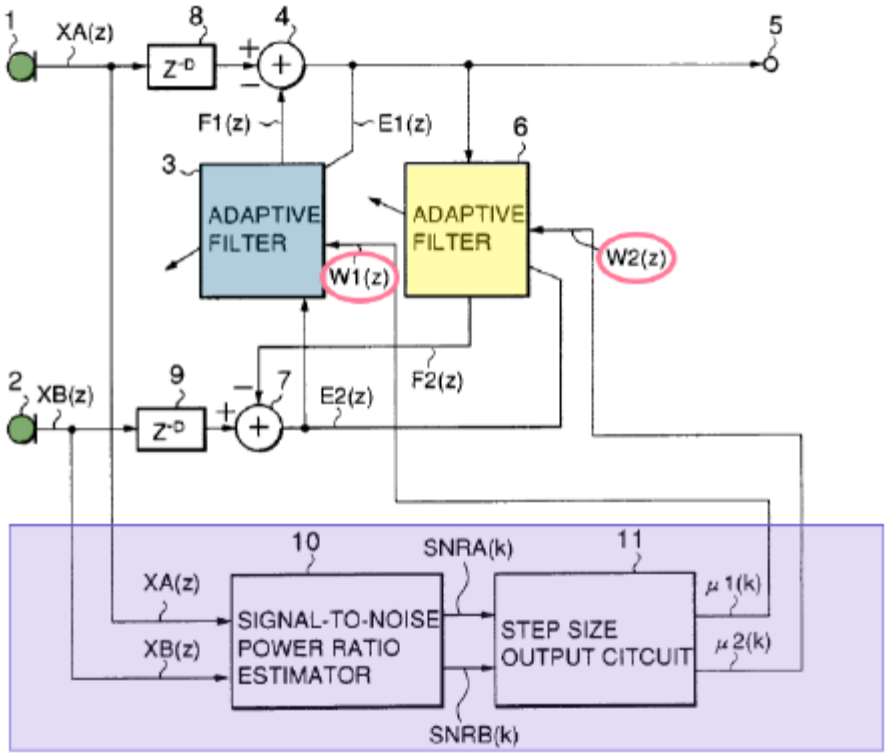

(Ex. 1003, Fig. 1, 4:49-53, 5:17-23.) Ikeda's a voice activity detector determines whether voice is present or absent by comparing the signals received at the microphones and controls the filters accordingly. (*Id.*, 3:32-45, 5:64-6:5, 2:32-36, 6:16-60; Ex. 1002 ¶¶32, 48.)

Ikeda also discloses the mathematical equations upon which its system is based. For example, Ikeda discloses that the first transfer function W1(z) can be approximated as

$$W1(z) = \frac{GA(z)}{GB(z)}$$

and the second transfer function W2(z) can be approximated as

$$W2(z) = \frac{HB(z)}{HA(z)}$$

(Ex. 1003, 5:53-56, Eqs. 14, 15; Ex. 1002 ¶49.)

Ikeda's transfer functions are used to reduce noise in the system's output signal, E1(z). That output signal, which "does not contain any noise signal," can be expressed as

$$E1(z) = XA(z) - W1(z)E2(z)$$

while the noise output E2(z) is expressed as

$$E2(z) = XB(z) - W2(z)E1(z)$$

(Ex. 1003, 2:43-44; *id.*, 5:17-30, 5:51-63, Eqs. 8-9; Ex. 1002 ¶50.) With simple mathematical steps (explained in further detail below), the above equation for the output signal E1(z) can be rewritten as

$$E1(z) = \frac{XA(z) - XB(z)W1(z)}{1 - W2(z)W1(z)}$$

(Ex. 1002 ¶50.)

Thus, two-microphone noise reduction systems that use two transfer functions and a voice activity detector to determine periods of voicing activity were known in the art. The mathematical steps for using the transfer functions to reduce noise in the output signal were also known. (*Id.* ¶51.)

B. Tissue Vibration Sensors for Voice Detection Were Known.

Determining when voicing activity is present or absent using a sensor that detects tissue vibrations has been known for decades. For example, Alcivar, which issued in 1973, disclosed a "tissue conduction microphone" that detects voice through "tissue vibrations due to the modulation of the vocal chords." (Ex. 1005, 4:65-5:54, Abstract; Ex. 1002 ¶34.)

Such voice activity detectors were widely used with microphones to produce a signal with reduced noise. In 2000, Puthuff disclosed a system for suppressing acoustic noise by "adaptively sens[ing] sound through bone conduction." (Ex. 1004, 4:13-21.) Puthuff disclosed detecting voice using a microphone 70 and "a motion transducer [80] comprising a vibration sensor" such as an accelerometer. (*Id.*, 5:1-3.) The vibration sensor is placed against a talker's head (e.g., in a handset or hearing aid) to detect "speech-induced vibrations." (*Id.*, 8:16-19; *id.*, 3:19-23, 2:20-3:5; Ex. 1002 ¶¶35, 52-53.)

II. THE '091 PATENT

A. Overview

The '091 patent claims nothing more than these conventional methods. The patent describes a system for use in a device such as a telephone. (Ex. 1001, 2:55-56.) The system comprises two microphones (102, 103) (green) that receive acoustic signals from a signal source 100 (yellow) and a noise source 101 (gray):

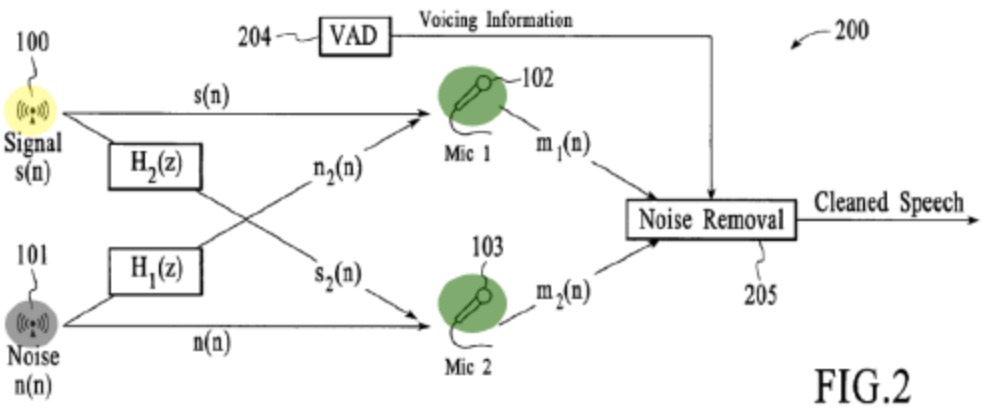

(*Id.*, Fig. 2, 3:20-50; Ex. 1002 ¶36.)

As was known in the art, a transfer function, $H_1(z)$, exists between the noise source and Mic 1, and a transfer function, $H_2(z)$, exists between the speech source and Mic 2. (Ex. 1001, Fig. 2, 3:53-55.) And, as in the prior art, a first transfer function is approximated during periods when voice activity is absent and a second transfer function is approximated during periods when voice activity is present. (*Id.*, 4:29-5:6, 7:50-56, 8:44-51; Ex. 1002 ¶¶36-37.)

The '091 patent also provides the conventional mathematical equations associated with such a system. For example, when voicing information is absent, the speech signal is assumed to be zero and $H_1(z)$ is approximated as:

$$H_1(z) = \frac{M_{1n}(z)}{M_{2n}(z)}$$

where subscript "n" indicates "that only noise is being received." (Ex. 1001, 4:28-45; *id.*, 7:50-53, Eq. 2; Ex. 1002 ¶37.) $M_1(z)$ and $M_2(z)$ are the frequency ("z")

domain representations of the acoustic signals received at signal microphone 102 and noise microphone 103, respectively. (Ex. 1001, 4:5-8, 4:29-51, 7:50-53; Ex. 1002 ¶37.)

Similarly, when voicing information is present, noise is assumed to be negligible or zero and $H_2(z)$ is approximated as:

$$H_2(z) = \frac{M_{2s}(z)}{M_{1s}(z)}$$

where subscript "s" indicates that only speech is occurring. (Ex. 1001, 4:53-5:5, 7:53-56; Ex. 1002 ¶38.)

The approximated transfer functions $H_1(z)$ and $H_2(z)$ are then used to "remove the noise from the [speech] signal" resulting in a denoised output signal S(z):

$$S(z) = \frac{M_1(z) - M_2(z)H_1(z)}{1 - H_2(z)H_1(z)}$$

(Ex. 1001, 5:13-36; Ex. 1002 ¶39.)

The system determines whether voice is present or absent using a VAD. According to the patent, prior art systems "generally" used acoustic microphone-based VADs, which have "significantly limited" capability in high noise environments or where background noise varies quickly. (Ex. 1001, 1:22-58.) Thus, the '091 patent uses a different type of known VAD, i.e., a VAD that "uses physiological information to determine when a speaker is speaking" through use of

a sensor such as "an accelerometer [or] a skin surface microphone in physical contact with skin of a user." (*Id.*, 3:39-50.)

B. Prosecution History

During prosecution, the applicant distinguished the prior art on limitations that required "generating transfer functions" and "removing acoustic noise … by applying the first transfer function and at least one combination of the first transfer function and the second transfer function." (*See* Ex. 1013, 407-12.) Although these limitations were known in the art, the Examiner allowed the claims. (*Id.*, 433.)

III. STATEMENT OF RELIEF REQUESTED

A. Grounds

The Board should cancel the claims under 35 U.S.C. §103 as follows:

Ground	Claims Challenged	References
1	1-8, 11-14, 16, 18-20	Ikeda and Puthuff
2	1-8, 11-14, 16, 18-20	Ikeda and Alcivar
3	3, 9, 15	Ikeda, Puthuff or Alcivar, and Hussain
4	10, 17	Ikeda, Puthuff or Alcivar, and Sasaki
5	11-20	Grounds 1-4 References and Bartlett

B. The References Are Prior Art.

The '091 patent's earliest possible priority date is no earlier than July 19, 2000. (Ex. 1001.) Petitioner does not concede the claims are entitled to that priority

date, and reserves its right to show they are not so entitled. Nevertheless, the references herein are prior art under pre-AIA 35 U.S.C. §102 for the following reasons:

(1) Ikeda (Ex. 1003) issued November 2, 1999, and is therefore prior art under at least §102(a) and (e);

(2) Puthuff (Ex. 1004) was filed on October 5, 1999, and published April 13, 2000, and is therefore prior art under at least §102(a);

(3) Alcivar (Ex. 1005) issued July 17, 1973, and is therefore prior art under at least §102(b);

(4) Bartlett (Ex. 1006) issued December 5, 1995; Hussain (Ex. 1007) published by September 25, 1997 (*see* Ex. 1015; *infra* §VI.C.4); and Sasaki (Ex. 1008) issued on November 28, 1995; each is therefore prior art under at least §102(b).

C. The Asserted References Are Analogous Art.

The references are analogous art because they are from the same field as the '091 patent, e.g., signal capture and processing for speech or audio applications. (Ex. 1002 ¶20; Ex. 1001, 1:16-18 (disclosure "relate[s] to systems and methods for detecting and processing a desired signal in the presence of acoustic noise")); *Unwired Planet, LLC v. Google Inc.*, 841 F.3d 995, 1000 (Fed. Cir. 2016). They are also pertinent to a problem the inventor was focused on, e.g., noise reduction. (*Id.*)

IV. LEVEL OF ORDINARY SKILL

Based on the relevant factors, *In re GPAC Inc.*, 57 F.3d 1573, 1579 (Fed. Cir. 1995), a person of ordinary skill in the art ("POSITA") would have had a minimum of a bachelor's degree in computer engineering, computer science, electrical engineering, mechanical engineering, or a similar field, and approximately three years of industry or academic experience in a field related to acoustics, speech recognition, speech detection, or signal processing. (Ex. 1002 ¶28.) Work experience could substitute for formal education and additional formal education could substitute for work experience. (*Id.*)

V. CLAIM CONSTRUCTION

On November 29, 2021, PO sued Petitioner for infringement of the '091 patent in *Jawbone Innovations, LLC v. Amazon.com, Inc.*, No. 2:21-cv-00435-JRG (E.D. Tex.), which was transferred to the Northern District of California as No. 5:22-cv-06727-TLT ("the Litigation"). Although the parties may propose constructions for certain terms in the Litigation for purposes of determining infringement, no claim terms require construction to resolve the obviousness challenges here.[3] *Nidec Motor*

[3] In the Litigation, the parties may dispute whether claims are invalid under 35 U.S.C. §112. For this proceeding, Petitioner assumes the claims are not invalid under §112.

Corp. v. Zhongshan Broad Ocean Motor Co. Ltd., 868 F.3d 1013, 1017 (Fed. Cir. 2017); *Vivid Techs., Inc. v. Am. Sci. & Eng'g, Inc.*, 200 F.3d 795, 803 (Fed. Cir. 1999).

VI. GROUNDS OF UNPATENTABILITY

A. Ground 1: Ikeda and Puthuff

Ikeda and Puthuff render claims 1-8, 11-14, 16, and 18-20 obvious. Claim 11 is addressed first because it most closely follows the '091 patent's specification.

1. Claim 11

Claim 11 recites a noise removal system comprising at least two acoustic microphones, a voicing sensor, and a processor. The voicing sensor is addressed last.

a. Preamble

The preamble recites "[a] system for removing acoustic noise from the acoustic signals." Ikeda discloses such a system. (Ex. 1003, 1:4-19 (disclosing a "noise canceler for canceling … a background noise signal introduced into a speech signal"); Ex. 1002 ¶55.)

b. Two-Microphone Receiver

Claim 11 recites "a receiver that receives at least two acoustic signals via at least two acoustic microphones positioned in a plurality of locations."

Ikeda discloses a system comprising a receiver that receives at least two acoustic signals at two microphones placed at a plurality of locations. Ikeda discloses: "A desired signal S(z) [e.g., a first acoustic signal, yellow] … is input to

the main signal microphone 1 [e.g., a first acoustic microphone, green] adjoining the speaker's mouth [e.g., at a first location]." (Ex. 1003, 1:46-56.) The "noise N(z) [e.g., a second acoustic signal, gray] is input to a reference signal microphone 2 [e.g., a second acoustic microphone, green] remote from the speaker [e.g., at a second location]." (*Id.*) This is shown in Ikeda's Figure 5:

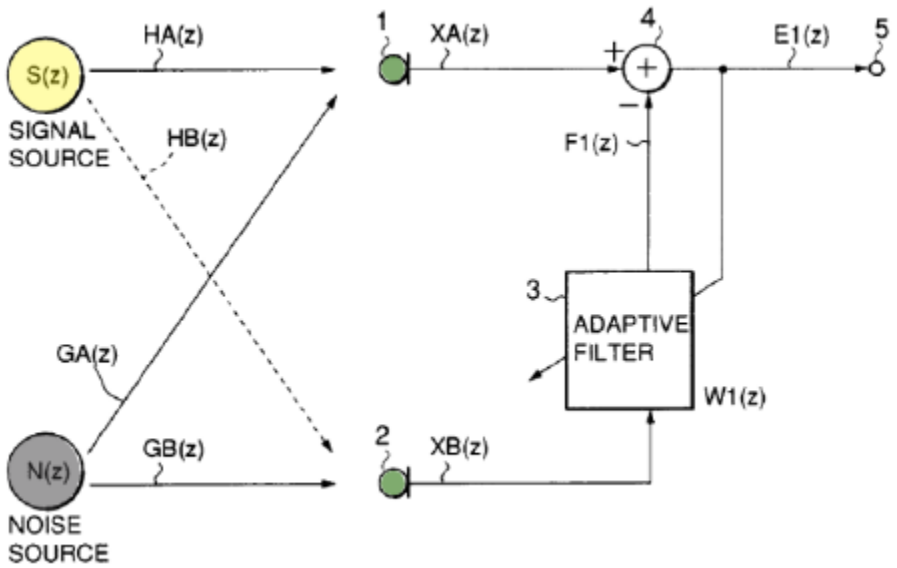

(*Id.*, Fig. 5; *id.*, Fig. 6.) That Figure discloses the same microphones (green) and acoustic signals (yellow, gray) as in the '091 patent:

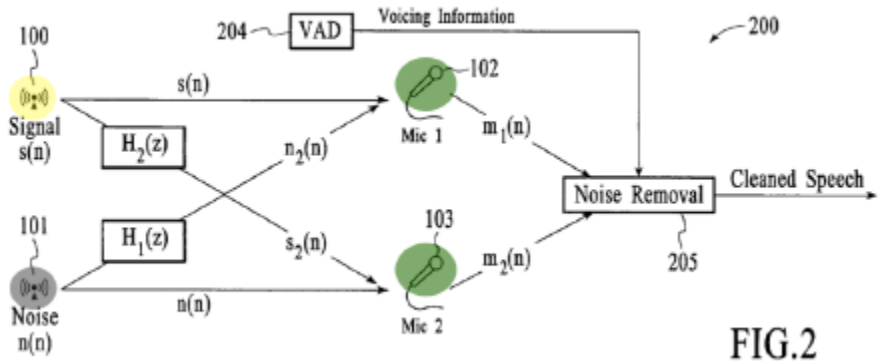

FIG.2

(Ex. 1001, Fig. 2; Ex. 1002 ¶57.)

Ikeda then describes an improved system in Figure 1. That system "includes a first microphone 1 [green] for a main signal" and "a second microphone 2 [green] for a reference signal":

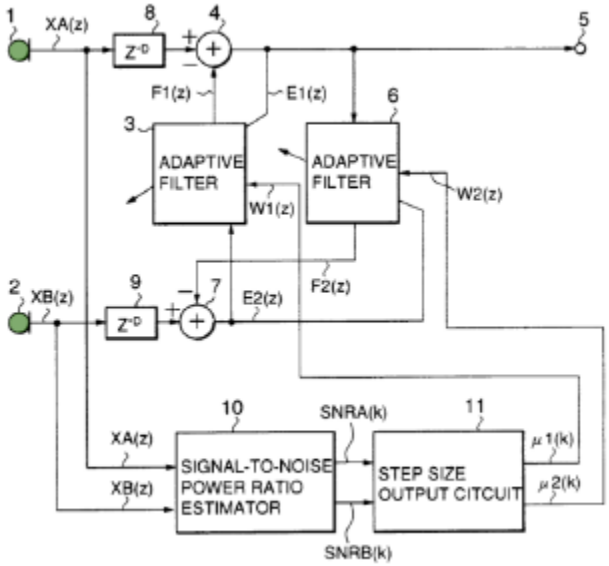

(Ex. 1003, Fig. 1, 4:49-53, 5:31-38 (improved system uses same signal and microphone configuration as Figure 5).) Ikeda's system can be used in, e.g., a handset. (*Id.*, 1:4-19.) Thus, Ikeda discloses this limitation. (Ex. 1002 ¶¶56-58.)

c. Processor that Generates First and Second Transfer Functions

Claim 11 next recites "a processor coupled among the receiver and the at least one sensor that generates a plurality of transfer functions, wherein the plurality of transfer functions includes a first transfer function … [and] a second transfer

function." Ikeda and/or Puthuff render this limitation obvious. As discussed below, Ikeda discloses generating a plurality of transfer functions. (*Infra* §§VI.A.1.c.i-ii.)

A POSITA would have understood Ikeda's transfer functions to be generated by a processor coupled to the receiver and VAD because that is how such systems were commonly implemented. (Ex. 1002 ¶¶60-61.) For example, Widrow 1985, a textbook Ikeda cites as disclosing prior art noise cancelers, describes using processors that implement adaptive algorithms and generate transfer functions. (Ex. 1011, 4 ("signal processors" used for "digital signal processing, including adaptive processing" in communication field); Ex. 1003, 1:9-19 (citing Widrow 1985); *see also* Ex. 1011, 8, 11, 13, 16, 93, 97, 339, 368, Figs. 1.2(a)-(d), 1.5(a)-(d); Ex. 1002 ¶60.)

Alternatively, it would have been obvious to a POSITA to use a processor coupled to the receiver and VAD to process the signals and generate transfer functions for several reasons. For example, it was well known to use processors for that purpose. (Ex. 1002 ¶61.) Indeed, the patent's priority application admits that techniques for generating transfer functions were known in the art. (Ex. 1009, 5 (calculating transfer functions can be accomplished by "any techniques used by those skilled in the art, including but not limited to adaptive techniques, recursive techniques, and simpler ones").) A POSITA would have understood that these "calculations" would be performed by a processor and that the known "techniques"

involve a processor coupled to the microphones and the VAD. (*Id.* ¶62.) Thus, using a processor as recited represents nothing more than the simple addition of one known element (a processor) to another known element (Ikeda's microphones and VAD) to obtain predictable results (improved voice detection in noisy environments). (*Id.* ¶63); *see KSR Int'l Co. v. Teleflex Inc.*, 550 U.S. 398, 417 (2007). Moreover, the combination represents using a known technique (processing signals and generating transfer functions using a processor) to improve a similar device and method (Ikeda's voice detection system) in the same way. (*Id.*) The combination also applies a known technique (processing signals and generating transfer functions using a processor) to a known device and method (Ikeda's) that is ready for improvement and yields predictable results. (*Id.*)

Alternatively, Puthuff renders this limitation obvious because Puthuff discloses using a processor to process microphone and accelerometer input. (Ex. 1004, 6:2-5 ("can be implemented using available sound processing circuitry and off-the-shelf technology."), 8:14-16, 11:8-16, 13:23-26 (describing using "digital signal processing"), claim 1 ("a processing circuit"); Ex. 1002 ¶64.) A POSITA would have been motivated to use a processor (as in Puthuff) to generate the transfer functions in Ikeda for the reasons discussed above (e.g., doing so was widely known and reflected the use of a known technique to improve a similar device and method in the same way). Accordingly, this limitation was well known in the art and would

have been obvious to a POSITA in view of Ikeda and/or Puthuff. (Ex. 1002 ¶¶59-64.)

i. First Transfer Function

Claim 11 recites generating "a first transfer function representative of a ratio of energy of acoustic signals received using at least two different acoustic microphones … wherein the first transfer function is generated in response to a determination that voicing activity is absent from the acoustic signals for a period of time." Ikeda discloses this limitation.

Ikeda discloses generating a first transfer function. Ikeda's system receives a desired speech signal S(z) (yellow) and a noise signal N(z) (gray) at two microphones (green):

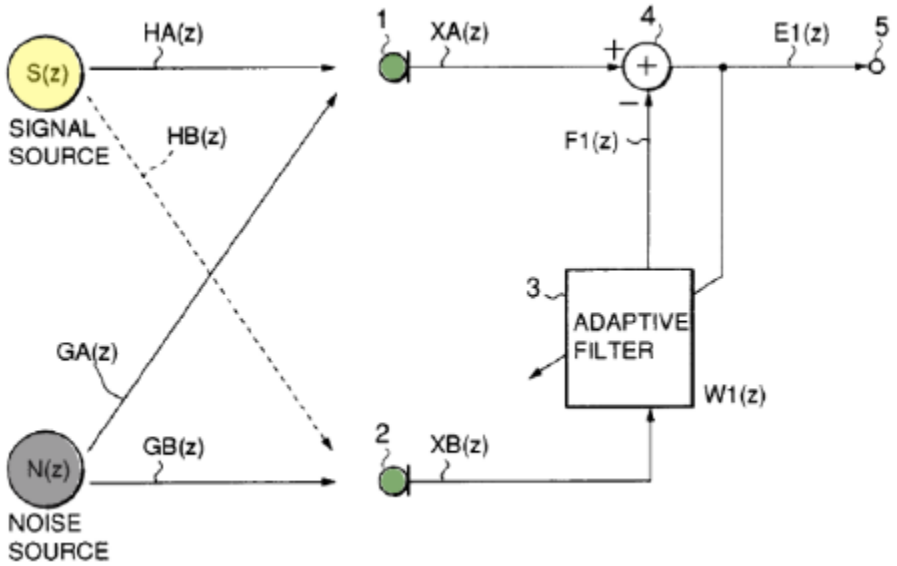

(Ex. 1003, Fig. 5; Ex. 1002 ¶66; *supra* §VI.A.1.b.) The acoustic paths between the sources (S(z) and N(z)) and the microphones (1, 2) have transfer characteristics

HA(z), HB(z), GA(z), and GB(z) as shown in Figure 5. (Ex. 1003, 1:42-65, 2:43-49, Fig. 5.) The "main signal" (XA(z)) received at microphone 1 is expressed as

$$XA(z) = GA(z)N(z) + HB(z)S(z)$$

and "reference signal" (XB(z)) received at microphone 2 is expressed as

$$XB(z) = GB(z)N(z) + HB(z)S(z)$$

(*Id.*, 5:31-38, Eqs. 10-11; Ex. 1002 ¶67.)

Ikeda's improved system (Figure 1) likewise receives desired signal S(z) and noise signal N(z) via the acoustic paths, and with the transfer characteristics, shown in Figure 5 above.

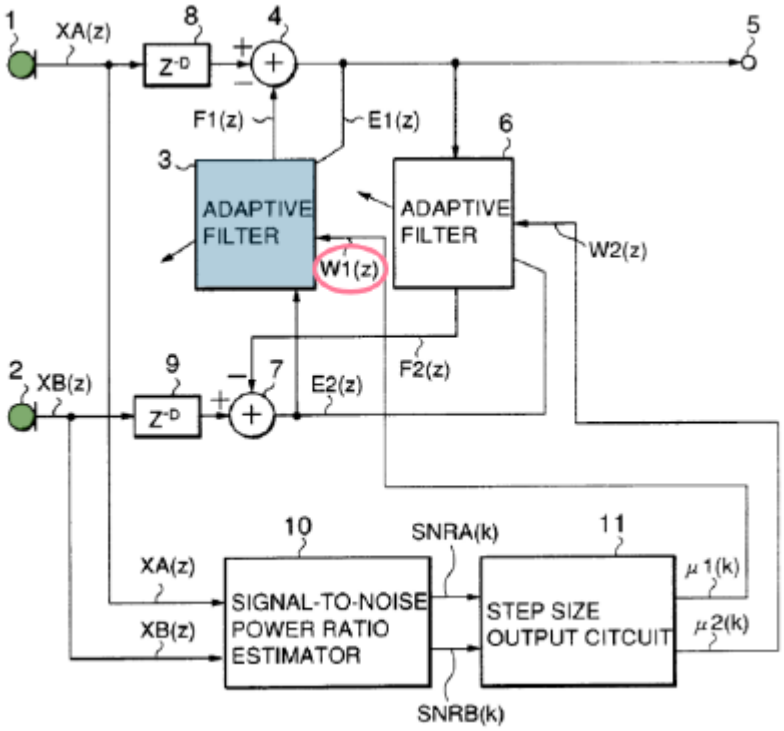

(Ex. 1003, Fig. 1, 5:31-38; Ex. 1002 ¶68.) Ikeda discloses generating a first transfer function, W1(z), that is ideally approximated as

$$W1(z) = \frac{GA(z)}{GB(z)}$$

(Ex. 1003, 5:17-63, Eq. 14; *id.*, 1:54-2:7, 5:17-22; Ex. 1002 ¶69.) Thus, Ikeda discloses generating a first transfer function, W1(z). (Ex. 1002 ¶¶66-69.)

Ikeda discloses generating transfer function W1(z) in response to a determination that voicing activity is absent from the acoustic signals for a period of time. (*Id.* ¶70.) Specifically, Ikeda discloses that most closely approximating the transfer function W1(z) requires calculating W1(z) when "the desired signal component S(z) is absent or negligibly small." (Ex. 1003, 3:32-36; *id.*, 2:45-51; Ex. 1002 ¶70.)

Ikeda teaches using a VAD to determine when voicing activity is absent. Ikeda discloses that one way to control when W1(z) is calculated is by determining from "outside," e.g., using a sensor other than the physical microphones, whether S(z) is absent. (Ex. 1003, 3:32-61, 9:11-18; Ex. 1002 ¶70.) However, instead of using an "outside" sensor, Ikeda's system uses a "signal-to-noise power ratio estimator" and "step size output circuit," as shown at the bottom of Figure 1 (purple):

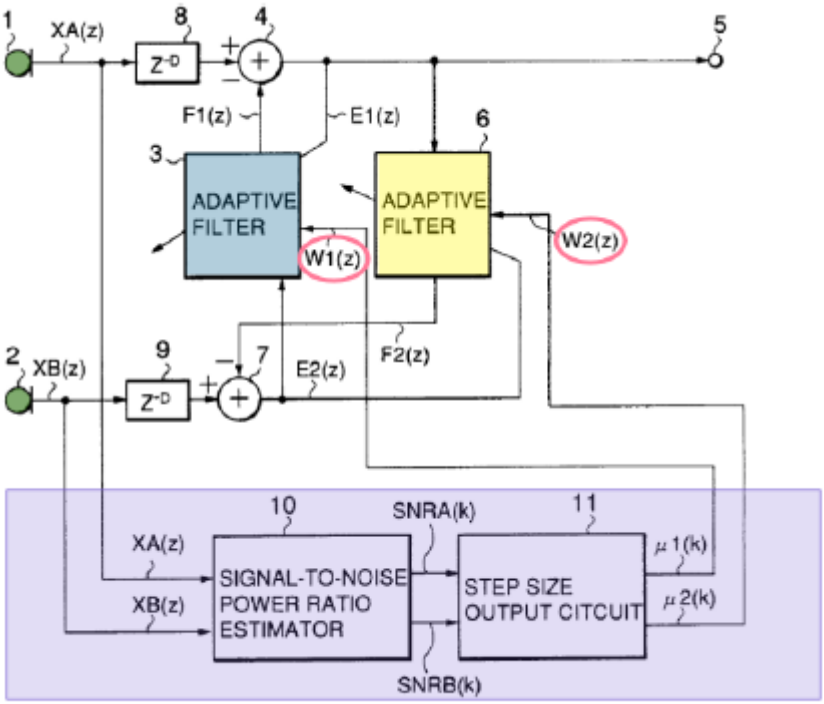

(Ex. 1003, 4:49-56, Fig. 1; Ex. 1002 ¶70.)

The "signal-to-noise power ratio estimator" receives microphone signals XA(z) and XB(z) as inputs and outputs "the estimated signal-to-noise power ratio SNRA(k) of the main signal and the estimated signal-to-noise power ratio SNRB(k) of the reference signal." (Ex. 1003, 8:6-12, Figs. 1, 2.) The "step size output circuit" receives SNRA(k) and SNRB(k) as inputs and outputs control signals that control "the step size[] μ1(k) of the adaptive filter 3" and "the step size μ2(k) of the adaptive filter 6." (*Id.*, 8:13-63.) The "step size [μ1(k)] is reduced when the signal-to-noise power ratio [SNRA(k)] is great, or it is increased when the ratio is small" while the opposite holds true for μ2(k). (*Id.*, 8:13-63, Figs. 3-4; Ex. 1002 ¶71.) Accordingly, "the step size output circuit 11 controls the step size to be fed to the adaptive

filter[s].” (Ex. 1003, 8:64-9:3.) Moreover, step sizes μ1(k) and μ2(k) may be compared and the smaller one set to be zero “in order to interrupt the learning function of the filter whose step size is determined to be zero.” (*Id.*, 9:4-10.)

Through this system, Ikeda updates W1(z) by a relatively larger amount when “the desired signal of the main signal … is smaller than the noise signal,” which includes when the desired signal is absent entirely (e.g., when voicing activity is absent). (*Id.*, 5:64-6:5, 6:16-60; Ex. 1002 ¶72.) When the desired signal is “greater than the noise signal” the update amount is decreased, including setting the update amount “to be zero in order to interrupt the learning function of the filter.” (Ex. 1003, 6:2-5, 9:4-10; *id.*, 6:16-60; Ex. 1002 ¶72.) Thus, when voicing activity is absent (e.g., when SNRA(k) and SNRB(k) are small or zero), step size μ1(k) “is increased” while μ2(k) “is decreased.” (Ex. 1003, 8:36-63; *id.*, 7:54-63, 8:13-35; Ex. 1002 ¶72.) After comparing “step sizes μ1(k) and μ2(k) assigned to the adaptive filters 3 and 6, respectively” and setting the smaller μ2(k) to zero, adaptive filter 3 calculates W1(z). (Ex. 1003, 9:4-10; Ex. 1002 ¶72.) Thus, Ikeda discloses generating the transfer characteristic W1(z) when voicing activity is absent from the acoustic signals. (Ex. 1002 ¶¶70-72.)

Ikeda further discloses calculating transfer function W1(z) as a ratio of energy of the acoustic signals received at primary microphone (XA(z)) and reference microphone (XB(z)) when voicing activity is absent. When voicing activity is

absent, S(z) is approximately equal to zero. (*Id.* ¶73; *see also* Ex. 1001, 4:52-57.) Thus, XA(z) and XB(z) simplify as follows:

$$XA(z) = GA(z)N(z) + HA(z) \cdot 0$$

$$XB(z) = GB(z)N(z) + HB(z) \cdot 0$$

and therefore, by eliminating the terms equal to zero,

$$XA(z) = GA(z)N(z)$$

$$XB(z) = GB(z)N(z)$$

(Ex. 1002 ¶73.) Solving for GA(z) and GB(z) by dividing both sides by N(z) gives:

$$GA(z) = \frac{XA(z)}{N(z)}$$

$$GB(z) = \frac{XB(z)}{N(z)}$$

(*Id.*) Accordingly, as a POSITA would have understood, Ikeda's transfer function W1(z) is approximated as follows when voicing activity is absent:

$$W1(z) = \frac{GA(z)}{GB(z)} = \frac{XA(z)/N(z)}{XB(z)/N(z)} = \frac{XA(z)}{XB(z)}$$

(*Id.*) Thus, Ikeda discloses or at least renders obvious that, when voicing activity is absent, the transfer function W1(z) is representative of a ratio of energy of acoustic signals received at microphones 1 (XA(z)) and 2 (XB(z)). (*Id.*)

Ikeda's disclosure of this limitation is confirmed by comparing Ikeda's equations to those in the '091 patent:

	'091 Specification	**Ikeda**
Primary microphone input	$M_1(z)$	$XA(z)$
Reference microphone input	$M_2(z)$	$XB(z)$
First transfer function[4]	$H_1(z) = \frac{M_1(z)}{M_2(z)}$	$W1(z) = \frac{XA(z)}{XB(z)}$

(Ex. 1001, 4:3-8, 4:40-45; Ex. 1003, 5:6-9; Ex. 1002 ¶¶65-74.)

ii. Second Transfer Function

Claim 11 recites generating "a second transfer function representative of the acoustic signals, wherein the second transfer function is generated in response to a determination that voicing activity is present in the acoustic signals for the period of time." Ikeda discloses this limitation.

Ikeda discloses generating a second transfer function, W2(z) (Ex. 1003, 2:53-3:31, 5:6-30), which is ideally approximated as

$$W2(z) = \frac{HB(z)}{HA(z)}$$

(*Id*, 5:17-63, Eq. 15; Ex. 1002 ¶76).

[4] The subscript "n" in $M_{1n}(z)$ and $M_{2n}(z)$ has been removed for simplicity. It is merely a conventional notation to show that only noise is present when transfer function $H_1(z)$ is calculated. (Ex. 1001, 4:37-39, 6:1-4; Ex. 1002 ¶74 n.3.)

Ikeda further discloses generating transfer function W2(z) when voicing activity is present. (Ex. 1002 ¶77.) Specifically, Ikeda discloses that most closely approximating the transfer function W2(z) requires calculating W2(z) when "signal component S(z) is present and the noise component N(z) is absent or negligibly small." (Ex. 1003, 3:36-40; *see id.*, 2:45-51.) Ikeda determines when this occurs using the "signal-to-noise power ratio estimator" and a "step size output circuit." (*Id.*, 5:64-6:15; *supra* §VI.A.1.c.i; Ex. 1002 ¶77.)

Ikeda discloses that calculating W2(z) when voicing activity is present results in W2(z) being representative of the acoustic signals. When voicing activity is present but noise is absent or negligible, N(z) is approximately equal to zero, and XA(z) and XB(z) simplify as follows:

$$XA(z) = GA(z) \cdot 0 + HA(z)S(z)$$

$$XB(z) = GB(z) \cdot 0 + HB(z)S(z)$$

and therefore, by eliminating the terms equal to zero,

$$XA(z) = HA(z)S(z)$$

$$XB(z) = HBA(z)S(z)$$

(Ex. 1002 ¶78.) Solving for HA(z) and HB(z) by dividing both sides by S(z) results in:

$$HA(z) = \frac{XA(z)}{S(z)}$$

$$HB(z) = \frac{XB(z)}{S(z)}$$

(*Id.*) Accordingly, Ikeda's transfer function W2(z) is approximated as follows when voicing activity is present and noise is negligible:

$$W2(z) = \frac{HB(z)}{HA(z)} = \frac{XB(z)/S(z)}{XA(z)/S(z)} = \frac{XB(z)}{XA(z)}$$

(*Id.*) Thus, when voicing activity is present and noise is negligible, transfer function W2(z) is representative of the acoustic signals received at microphones 1 (XA(z)) and 2 (XB(z)). (*Id.*)

Ikeda's disclosure of this limitation is confirmed by comparing Ikeda's equations to those provided in the '091 patent:

	'091 Specification	**Ikeda**
Primary microphone input	$M_1(z)$	$XA(z)$
Reference microphone input	$M_2(z)$	$XB(z)$
Second transfer function[5]	$H_1(z) = \frac{M_1(z)}{M_2(z)}$	$W2(z) = \frac{XB(z)}{XA(z)}$

(Ex. 1001, 4:3-8, 5:1-5; Ex. 1003, 5:6-9; Ex. 1002 ¶¶75-79.)

[5] The subscript "s" in $M_{1s}(z)$ and $M_{2s}(z)$ has been removed for simplicity. (*Supra* §VI.A.1.c.i n.5.)

d. Noise Removal

Claim 11 recites "wherein acoustic noise is removed from the acoustic signals using the first transfer function and at least one combination of the first transfer function and the second transfer function to produce the denoised acoustic data stream." Ikeda discloses this limitation.

Ikeda uses its transfer functions W1(z) and W2(z) to remove noise from the acoustic signals resulting in denoised output signal E1(z). (Ex. 1003, 4:52-53, 5:12-15, Fig. 1; Ex. 1002 ¶81.) The denoised output signal E1(z) is represented by:

$$E1(z) = X\mathrm{A}(z) - W1(z)E2(z)$$

where

$$E2(z) = X\mathrm{B}(z) - W2(z)E1(z)$$

(Ex. 1003, 5:17-30, Eqs. 8-9.) Those equations can be rearranged as follows. First, the value of E2(z) from the second equation can be substituted into the first equation:

$$E1(z) = X\mathrm{A}(z) - W1(z) \cdot (X\mathrm{B}(z) - W2(z)E1(z))$$

then, multiplying out the right-hand term,

$$E1(z) = X\mathrm{A}(z) - X\mathrm{B}(z)W1(z) + W1(z)W2(z)E1(z)$$

and subtracting the right-hand term from both sides,

$$E1(z) - W1(z)W2(z)E1(z) = X\mathrm{A}(z) - X\mathrm{B}(z)W1(z)$$

factoring E1(z) out of the left side of the equation,

$$E1(z) \cdot \big(1 - W1(z)W2(z)\big) = XA(z) - XB(z)W1(z)$$

and finally, solving for E1(z) results in:

$$E1(z) = \frac{XA(z) - XB(z)W1(z)}{1 - W1(z)W2(z)}$$

(Ex. 1002 ¶81.) Thus, Ikeda discloses or renders obvious using the first transfer function (W1(z), in the numerator of the above fraction) and a combination of the first transfer function and the second transfer function (W1(z)W2(z), in the denominator), to produce the denoised output. (*Id.*)

Ikeda's disclosure of this limitation is confirmed by comparing Ikeda's equations to those in the '091 patent:

	'091 Specification	**Ikeda**
Primary microphone input	$M_1(z)$	$XA(z)$
Reference microphone input	$M_2(z)$	$XB(z)$
First transfer function	$H_1(z) = \frac{M_1(z)}{M_2(z)}$	$W1(z) = \frac{XA(z)}{XB(z)}$
Second transfer function	$H_2(z) = \frac{M_2(z)}{M_1(z)}$	$W2(z) = \frac{XB(z)}{XA(z)}$
Output after removing noise using the first transfer function and a combination of the first and second transfer functions	$S(z) = \frac{M_1(z) - M_2(z)H_1(z)}{1 - H_2(z)H_1(z)}$	$E1(z) = \frac{XA(z) - XB(z)W1(z)}{1 - W1(z)W2(z)}$

(Ex. 1001, 4:3-8; 4:40-45, 5:1-5, 5:22-26, Eq. 3; Ex. 1003, 5:6-9; Ex. 1002 ¶82.)

Thus, Ikeda discloses or renders obvious this limitation. (Ex. 1002 ¶¶80-83.)

e. Vibration Sensor

Claim 11 recites "at least one sensor that receives human tissue vibration information associated with human voicing activity of a user." Puthuff discloses this limitation.

Puthuff discloses a system for detecting and transmitting speech using an acoustic microphone and a "vibration sensor" such as an "accelerometer." (Ex. 1004, 5:1-9.) The acoustic microphone may be "any conventional acoustic sound transducer such as, e.g., a standard microphone[.]" (*Id.*, 9:1-6.) The accelerometer "is a transducer device which senses the vibratory displacement of the bones in proximity to the ear as imparted primarily by vibrations during speech." (*Id.*; *id.*, 8:12-16.) The device is "held against the skin of the talker's skull and may take the form an ear level pickup worn behind the ear, or a telephone handset held against the ear during telephonic communication." (*Id.*, 8:16-19.)

Puthuff explains that, in "an acoustically quiet environment," an acoustic microphone is better for picking up a talker's voice than is bone conduction. (*Id.*, 4:19-24.) But when acoustic noise levels are high, the quality of acoustic microphone detection is "degraded enough to make bone conduction a better alternative." (*Id.*) Thus, Puthuff's system combines both methods of voice detection. "At low ambient noise levels, the microphone signal is permitted to dominate as the output signal." (*Id.*, 10:13-14; *id.*, 5:4-7.) At "high ambient noise levels[,]" however, the system

prioritizes output of "the bone conduction component of the audio signal, comprising primarily the talker's speech[.]" (*Id.*, 10:10-25; 4:13-16.) Puthuff discloses that a transition circuit fades out the acoustic microphone signal and fades in the "bone vibration sensor signal" as ambient noise levels increase. (*Id.*, 5:7-9, 10:5-11:5.)

Puthuff therefore discloses a "sensor that receives human tissue vibration information associated with human voicing activity of a user" as recited. (Ex. 1002 ¶¶84-87.)

i. Motivation to Combine

A POSITA would have immediately recognized that one could combine the teachings of Ikeda and Puthuff and use Puthuff's vibration sensor either (a) in place of, or (b) in addition to, Ikeda's VAD (e.g., the signal-to-noise power ratio estimator and optionally the step size output circuit) so that Ikeda's system could more accurately determine periods when voicing activity is absent or present. (Ex. 1002 ¶88.) Each of the two proposed combinations are addressed below.

First, Puthuff discloses that its system functions as a VAD to indicate whether or not voicing activity is present. For example, Puthuff teaches that the incorporation of a vibration sensor "improves system immunity to false triggering due to noisy environments" and determines "the absence of the user's voice" to conserve power. (Ex. 1004, 6:6-10; Ex. 1002 ¶89.) A POSITA would have been motivated to use a

vibration sensor as a VAD in Ikeda's system *instead of* Ikeda's signal-to-noise power ratio estimator for at least the following reasons:

1. Ikeda and Puthuff address the same problem—accurately detecting voice activity in noisy environments. (Ex. 1003, 3:32-61; Ex. 1004, Abstract, 3:1-5, 4:13-19; Ex. 1002 ¶90.)

2. Ikeda discloses the need for accurately determining periods when a desired signal (e.g., voicing activity) is present and periods when a desired signal is absent for an adaptive noise canceler to function optimally. (Ex. 1003, 3:32-54; Ex. 1002 ¶91.) Thus, a POSITA would have been motivated to look to other VAD methods. Puthuff explains that "vibration transducers" and "accelerometers" had been used for decades to detect voice activity and transmit signals. (Ex. 1004, 3:19-24.) Puthuff further teaches that its vibration sensor reduces false triggering in noisy environments, and that the system is capable of determining "the absence of the user's voice." (*Id.*, 6:6-10.) Thus, a POSITA would have been motivated to incorporate a vibration sensor to provide improved voice activity detection. (Ex. 1002 ¶91.)

3. Puthuff discloses that voice signals can be detected with an accelerometer using "off-the-shelf components" with "reduced production costs and power consumption requirements." (Ex. 1004, 6:2-10, 12:17-13:2.) Thus, a POSITA

would have been motivated to use an accelerometer sensor in Ikeda's system as an inexpensive, easy-to-find component for detecting voice activity. (Ex. 1002 ¶92.)

4. Puthuff teaches that the use of vibration sensors as noise-resistant sensors for detecting voice activity was known for decades. (Ex. 1004, 2:20-24, 3:19-25.) Thus, using a vibration sensor (as in Puthuff) as a VAD in Ikeda's system would represent nothing more than the simple addition of one known element (vibration sensor as in Puthuff) to another known element (system requiring voice activity detection as in Ikeda) to obtain the predictable results of improved voice activity detection, particularly in noisy environments. (Ex. 1002 ¶93); *see KSR*, 550 U.S. at 417. Moreover, the combination represents the use of a known technique (detecting voicing activity with a vibration sensor) to improve a similar device and method (Ikeda's system that relies on voice activity detection) in the same way. (*Id.*) The combination also applies a known technique (detecting voicing activity with a vibration sensor as in Puthuff) to a known device and method (Ikeda's system) that is ready for improvement and yields predictable results (a system with improved voice detection, particularly in noisy environments). (*Id.*)

5. Puthuff expressly teaches that its vibration sensor is useful for "dual microphone" systems. (Ex. 1004, 6:11-23.) Thus, a POSITA would have been motivated to combine Puthuff's teachings with Ikeda's dual microphone system, and would have had a reasonable expectation of success. (Ex. 1002 ¶94.)

A POSITA would have further expected success in modifying Ikeda's noise canceler to use a vibration-sensing VAD because the signal processing of Ikeda's system does not depend on the type of VAD used as long as it is accurate. (Ex. 1002 ¶95.) Similarly, a vibration-sensing VAD would detect voice signals in a predictable manner. (*Id.*)

Combining Ikeda and Puthuff also would have been obvious for a second, independent reason. A POSITA alternatively would have been motivated to incorporate Puthuff's vibration sensor and transition circuit into Ikeda such that the output of Ikeda's microphone 1, XA(z), was used in Puthuff's system as the output of the microphone 20. (Ex. 1002 ¶96.) In other words, Ikeda's "main signal" XA(z) would be input into Puthuff's equalizer 22, amplified, faded, and combined with the signal from the accelerometer 30 at the adder circuit 38. (*See* Ex. 1004, Fig. 1; Ex. 1002 ¶96.) The output signal 40 from Puthuff's system would be input into Ikeda's signal-to-noise power ratio generator in place of the original microphone-only signal XA(z). (Ex. 1002 ¶96.)

A POSITA would have immediately recognized that Puthuff's vibration sensor and transition circuit could be used so that the signal sent to Ikeda's signal-to-noise power ratio estimator as the "main signal" would be more accurate under varying conditions: during periods of low noise, the signal transmitted to the signal-to-noise power ratio estimator would be predominantly the signal from the first

microphone 1. (*Id.* ¶97.) But during periods of high ambient noise, the signal transmitted to the signal-to-noise power ratio estimator would be predominantly the "bone conduction component of the audio signal, comprising primarily the talker's speech." (Ex. 1004, 10:10-13.) A POSITA would have been motivated to modify Ikeda in this manner for several reasons, including reasons 1-3 and 5 provided above. (Ex. 1002 ¶97.) Furthermore, such a modification would have improved the accuracy of Ikeda's signal-to-noise power ratio generator because it would ensure that the "main signal" being provided to the signal-to-noise power ratio generator (which in Ikeda's system is only the output of microphone 1, XA(z)) was the most accurate representation of the speech signal (the "output signal 40" in Puthuff). (*Id.*) Such a modification would be particularly advantageous in high-noise environments for the many reasons Puthuff explains. (*Id.*)

A POSITA would have expected success in combining Ikeda's noise canceler with an accelerometer or other vibration sensor for detecting voice signals, and to transmit to the output signal 40 from Puthuff's system to Ikeda's signal-to-noise power ratio estimator, because the signal-to-noise power ratio estimator would simply receive a more accurate and better representation of the user's voice in high noise environments. (*Id.* ¶98.) As discussed above, such a modification would require nothing more than off-the-shelf components. (*Id.*)

Thus, Ikeda and Puthuff disclose and/or render obvious claim 11. (*Id.* ¶¶54-98.)

2. Claim 12

Claim 12 depends from claim 11 and further recites "wherein the sensor includes a mechanical sensor in contact with the skin." Puthuff discloses this limitation because it discloses that its accelerometer voicing sensor (which is a mechanical sensor) is "held against the skin of the talker's skull" or "against the ear." (Ex. 1004, 8:16-19; *id.*, Abstract (vibration sensor may be accelerometer, velocity sensor, or displacement sensor), 5:1-4, 19:6-20:4; *supra* §VI.A.1.e; Ex. 1002 ¶99.)

3. Claim 13

Claim 13 depends from claim 11 and further recites "wherein the sensor includes at least one of an accelerometer, a skin surface microphone in physical contact with skin of a user, a human tissue vibration detector, a radio frequency (RF) vibration detector, and a laser vibration detector." Puthuff discloses this limitation because it discloses that the vibration sensor may be an accelerometer, velocity sensor, or displacement sensor. (Ex. 1004, 5:1-4, 8:16-19, 19:6-20:4; *supra* §VI.A.1.e; Ex. 1002 ¶100.)

4. Claim 14

Claim 14 depends from claim 11 and further recites "wherein the human tissue is at least one of on a surface of a head, near the surface of the head, on a surface of a neck, near the surface of the neck, on a surface of a chest, and near the surface of

the chest." Puthuff discloses this limitation because it discloses sensing tissue vibrations behind the ear or in a face mask (e.g., on or near the surface of the head). (Ex. 1004, 8:16-20.) Moreover, it would have been obvious to a POSITA to position the vibration sensor in the recited locations because Ikeda teaches that vibration sensors are effective when placed on the "throat" or on "any part of a person's body supported by bone structure." (*Id.*, 2:20-3:5, 3:19-23; *supra* §VI.A.1.e, Ex. 1002 ¶101.)

5. Claim 16

Claim 16 depends from claim 11 and further recites that the receiver "includes a plurality of independently located microphones." Ikeda discloses this limitation because it discloses two independently located microphones. (*Supra* §VI.A.1.b; Ex. 1002 ¶102.)

6. Claim 18

Independent claim 18 recites a "signal processing system" having virtually identical limitations to those addressed above for claim 11, including a processor that generates transfer first and second transfer functions, a receiver, microphones, and a voicing sensor, as well as removing acoustic noise from the acoustic signals. Ikeda and Puthuff disclose and render obvious each of these limitations as discussed above for claim 11. (*Supra* §VI.A.1; Ex. 1002 ¶¶103-110.)

Claim 18's preamble recites "[a] signal processing system coupled among a user and an electronic device, wherein the signal processing system includes a denoising subsystem for removing acoustic noise from acoustic signals." To the extent it is limiting, Ikeda discloses it because Ikeda discloses a "noise canceler for canceling, by use of an adaptive filter, a background noise signal introduced into a speech signal input via a microphone, a handset or the like" that comprises an electronic device and is intended for use by a user in, e.g., a hearing aid or telephone handset. (Ex. 1003, 8:16-20, 33:10-13, 1:4-2:6; Ex. 1002 ¶104; *supra* §VI.A.1.a.)

7. Claim 19

Claim 19 depends from claim 18 and further recites that the electronic device may be a cellular telephone, portable communication device, etc. Ikeda and Puthuff disclose and/or render obvious this limitation.

Ikeda discloses a system for canceling noise in signals received by "a microphone, a handset or the like." (Ex. 1003, 1:4-19.) Further, Ikeda explains that "background noise … introduced into a speech signal input via, e.g., a microphone or handset is a critical problem when it comes to a narrow band speech coder[s], speech recognition device[s] and so forth." (*Id.*, 1:9-13.) A POSITA would have understood that, at the time, a "narrow band speech coder" was a common component in cellular telephones. (Ex. 1002 ¶112; Ex. 1012, 1:9-2:7.) Furthermore, a "handset" was a common way to refer to a telephone microphone, including a

cellular telephone microphone. (Ex. 1002 ¶112.) Accordingly, a POSITA would have understood Ikeda to disclose, or at least suggest, the use of its system in a cellular telephone. (*Id.*) Furthermore, a POSITA would have understood that a "handset" and/or a "microphone" was a common component of a "portable communication device" and thus would have understood Ikeda to disclose that its system is used in such a device. (*Id.*) Ikeda therefore discloses and/or renders obvious this limitation.

Puthuff discloses that its voicing sensor "may be part of a stand alone ear level communication transmitter" or "implemented in a telephone system or other communication systems." (Ex. 1004, Title, Abstract; Ex. 1002 ¶113.) It further discloses placement in a "telephone handset" or in a "face mask worn with, for example, a firefighter's helmet." (Ex. 1004, 8:16-20.) Accordingly, Puthuff discloses this limitation and it would have been obvious to implement Ikeda's system, modified to include a vibration sensor as taught by Puthuff, in a cellular telephone or portable communication device. (Ex. 1002 ¶113.)

8. Claim 20

Claim 20 depends from claim 18 and further recites "wherein the human tissue is at least one of on a surface of a head, near the surface of the head, on a surface of a neck, near the surface of the neck, on a surface of a chest, and near the surface of the chest." Puthuff discloses this limitation. (*Supra* §VI.A.4; Ex. 1002 ¶¶101, 114.)

9. Claim 1

Independent claim 1 is a method claim that recites several functions addressed in claim 11, including receiving acoustic signals, receiving a voice activity signal, generating transfer functions, and removing noise. These limitations are disclosed by the prior art for the reasons discussed above. (*Supra* §VI.A.1; Ex. 1002 ¶115.)

a. Preamble

To the extent the preamble is limiting, Ikeda discloses such a method because it discloses using a "noise canceler." (Ex. 1003, 1:4-19; *supra* §VI.A.1.a; Ex. 1002 ¶116.)

b. Receiving Acoustic Signals

Claim 1 recites "receiving at least two acoustic signals using at least two acoustic microphones positioned in a plurality of locations." Ikeda discloses this limitation. (*Supra* §VI.A.1.b; Ex. 1002 ¶117.)

c. Sensing Vibrations

Claim 1 recites "receiving a voice activity signal that includes information on vibration of human tissue associated with human voicing activity of a user." Puthuff discloses this limitation, and a POSITA would have been motivated to combine its disclosure with Ikeda. (*Supra* §§VI.A.1.e, VI.A.1.e.i; Ex. 1002 ¶¶118, 84-98.)

d. Generating a VAD Signal

Claim 1 recites "generating a voice activity detection (VAD) signal using the voice activity signal." Ikeda and Puthuff disclose this limitation and/or render it obvious.

Ikeda discloses this limitation. As discussed above, Ikeda discloses a noise canceler that includes a "signal-to-noise power ratio estimator" and "step size output circuit" that determine the presence or absence of a desired signal (e.g., a voice signal) and, based on that determination, control the generation of transfer functions by the adaptive filters. (*Supra* §§VI.A.1.c.i-ii; Ex. 1002 ¶¶120, 65-79.) A POSITA would have understood that the signals output by the signal-to-noise power ratio estimator and/or the step size output circuit comprise a "voice detection (VAD) signal" because they contain information about whether a desired signal (e.g., a voice signal) is present, which is used to control Ikeda's adaptive filters. (Ex. 1002 ¶120.) Additionally, Ikeda discloses systems configured to "detect … [when] the desired signal component S(z) is absent (or little) … and to command the adaptive filters to perform lea[r]ning [e.g., calculate a transfer function] in such sections." (Ex. 1003, 3:40-45.) A POSITA would have understood that "command[ing] the adaptive filters" to calculate a transfer function at the appropriate time requires generating a VAD signal. (*Id.*, 3:50-54; Ex. 1002 ¶121.) Accordingly, to the extent Puthuff's voice activity signal is used as an input into Ikeda's VAD (*supra*

§VI.A.1.e), Ikeda's VAD generates a voice activity detection signal using Puthuff's voice activity signal. (Ex. 1002 ¶121.)

Puthuff also discloses this limitation. Puthuff discloses that its vibration sensor is capable of detecting the presence of a user's voice. (*Supra* §VI.A.1.e; Ex. 1002 ¶¶122, 84-98.) Puthuff further discloses that its system is capable of transmitting a signal based on what is detected by its vibration sensor (e.g., a signal denoting the absence of a user's voice). A POSITA would have understood that such a signal is a VAD signal because it contains information regarding whether Puthuff's vibration sensor has detected voice activity. (Ex. 1002 ¶122.) Thus, to the extent Puthuff's VAD replaces Ikeda's VAD, Puthuff discloses this limitation. (*Id.*)

e. Generating Transfer Functions

Claim 1 recites "generating at least two transfer functions representative of a ratio of energy of the acoustic signal received using at least two different acoustic microphones of the at least two acoustic microphones when the VAD indicates that user voicing activity is absent, wherein the at least two transfer functions comprise a first transfer function and a second transfer function." Ikeda discloses this limitation.

In the co-pending litigation, PO has asserted claim 1 by applying it in the same way as claims 11 and 18. Thus, Ikeda discloses and/or renders obvious this limitation

for the same reasons discussed above for claim 11. (*Supra* §§VI.A.1.c.i-ii; Ex. 1002 ¶124.)

Ikeda also discloses this limitation as written. In one embodiment, Ikeda discloses that the first transfer function W1(z) is updated by an increasing amount when voice is absent and by a reduced amount when voice is present. (Ex. 1003, 5:64-6:15). The second transfer function is updated by an increasing amount when voice is present and reduced when voice is absent. (*Id.*; *cf. id.*, 9:4-10 (discussing an *alternative* embodiment in which only one transfer function updates at a time).) Accordingly, Ikeda discloses that both the first and second transfer functions may be generated (e.g., updated) when voicing activity is absent. (Ex. 1002 ¶125.)

As discussed above, Ikeda discloses that its VAD signal is used to indicate when voicing activity is present or absent and to control the generation of Ikeda's transfer functions. (*Supra* §§VI.A.1.c.i-ii.) A POSITA would also have understood that, depending on how Puthuff's vibration sensor is combined with Ikeda's system (*supra* §VI.A.1.e), Puthuff's vibration sensor may likewise provide a VAD signal that Ikeda's system would use in lieu of Ikeda's VAD signal for the same purpose of controlling the generation of Ikeda's transfer functions. (Ex. 1002 ¶126.) Ikeda and Puthuff therefore disclose this limitation. (*Id.* ¶¶123-126.)

f. Removing Noise

Claim 1 recites "removing acoustic noise from at least one of the acoustic signals by applying the first transfer function and at least one combination of the first transfer function and the second transfer function to the acoustic signals and generating denoised acoustic signals." Ikeda discloses this limitation. (*Supra* §VI.A.1.d; Ex. 1002 ¶127.)

10. Claim 2

a. Generating One Transfer Function

Claim 2 depends from claim 1 and further recites "wherein removing noise further comprises[] generating one transfer function of the at least two transfer functions to be representative of a ratio of energy of the acoustic signal received when the VAD indicates that user voice activity is present." Ikeda discloses this limitation. (*Supra* §§VI.A.1.c.i, VI.A.9.e; Ex. 1002 ¶128.)

b. Removing Noise

Claim 2 also recites "removing noise from the acoustic signals using at least one combination of the at least two transfer functions to generate the denoised acoustic signals." Ikeda discloses this limitation. (*Supra* §VI.A.1.d; Ex. 1002 ¶129.)

11. Claim 3

Claim 3 depends from claim 1 and further recites "wherein the acoustic signals include at least one reflection of at least one associated noise source signal and at

least one reflection of at least one acoustic source signal." Ikeda discloses cancelling "a background noise signal introduced into a speech signal." (Ex. 1003, 1:4-8.) A POSITA would have understood that any real-world application involving acoustic signals would take place in reverberant environments which inherently create at least one reflection of both the background noise signal and the speech signal. (Ex. 1002 ¶130 (citing Ex. 1007).) Thus, Ikeda inherently discloses, or at least renders obvious, this limitation. Alternatively, it would have been obvious in view of Puthuff's disclosure that such systems can be used in a face mask worn with a firefighter's helmet, as a POSITA would have understood such masks to reflect the noise and acoustic source signals. (Ex. 1004, 8:16-20; Ex. 1002 ¶130.)

12. Claim 4

Claim 4 depends from claim 1 and further recites "wherein generating the at least two transfer functions comprises recalculating the at least two transfer functions during at least one prespecified interval." Ikeda discloses this limitation because it discloses recalculating transfer function W1(z) at least during the prespecified interval when voice activity is absent and recalculating transfer function W2(z) at least during the prespecified interval during which voice activity is present. (*Supra* §§VI.A.1.c.i-ii; Ex. 1002 ¶131.) Furthermore, it would have been obvious to a POSITA to recalculate the transfer functions W1(z) and W2(z) at regular (e.g., prespecified) intervals during periods when voicing activity is absent and/or present,

for example, to match the system's sample rate and/or to ensure that the transfer functions continue to closely approximate their ideal values, thus ensuring accurate noise cancellation. (Ex. 1002 ¶131.)

13. Claim 5

Claim 5 depends from claim 1 and further recites "wherein generating the at least two transfer functions comprises use of at least one technique selected from a group consisting of adaptive techniques and recursive techniques."

Ikeda discloses the use of adaptive filters for calculating transfer functions with the use of an "LMS algorithm" which is a "[t]ypical" adaptive algorithm for updating transfer function coefficients. (Ex. 1003, 1:31-41, 2:64-65 ("the filter 6 performs the above learning based on, e.g., the LIM scheme."), 6:19-61, Figs. 1, 5 (showing the use of adaptive filters); Ex. 1002 ¶133.) Thus, Ikeda discloses this limitation.

Even if Ikeda had not disclosed this limitation, it would have been obvious. PO admitted that techniques, including adaptive and recursive techniques, for generating transfer functions were known in the art. (Ex. 1009, 5 (transfer functions can be calculated using "any techniques used by those skilled in the art, including but not limited to adaptive techniques, recursive techniques, and simpler ones.").) Accordingly, this limitation adds nothing new and claim 5 is obvious for the same reasons as claim 1. (*Supra* §§VI.A.1.c.i-ii; Ex. 1002 ¶134.)

14. Claim 6

Claim 6 depends from claim 1 and further recites "wherein information on the vibration of human tissue is provided by a sensor in contact with the skin." Puthuff discloses this limitation. (*Supra* §VI.A.1.e, Ex. 1002 ¶135.)

15. Claim 7

Claim 7 depends from claim 1 and further specifies particular types of sensors. Puthuff discloses this limitation. (*Supra* §VI.A.3, Ex. 1002 ¶136.)

16. Claim 8

Claim 8 depends from claim 1 and further recites the location of the human tissue. Puthuff discloses this limitation. (*Supra* §VI.A.4, Ex. 1002 ¶137.)

B. Ground 2: Ikeda and Alcivar

Ikeda and Alcivar render claims 1-8, 11-14, 16, and 18-20 obvious. (Ex. 1002 ¶¶138-89.) Petitioner incorporates its discussion of Ikeda and how it discloses or renders obvious each claim and limitation from Ground 1. To avoid repetition, Petitioner only addresses below the claims and limitations for which Alcivar is relevant.

1. Claim 11

a. Vibration Sensor

Alcivar discloses this limitation. Alcivar discloses a "tissue-conduction microphone [] positioned in contact with the user's neck tissue in the vicinity of the larynx" for use in voice communication systems to detect voicing activity and

control a voice-activated switch. (Ex. 1005, Abstract; *id.*, 1:5-8, 1:21-28, 1:31-33, 4:65-5:12; Ex. 1002 ¶146.) Alcivar's tissue-conduction microphone detects "tissue vibrations due to modulation of the vocal chords (speech)[.]" (Ex. 1005, 4:65-5:6.) Thus, Alcivar's tissue-conduction microphone is a sensor that receives human tissue vibration information associated with human voicing activity. (Ex. 1002 ¶¶145-46.)

Alcivar discloses that its system determines whether voicing activity is present and controls a voice-activated switch. (Ex. 1005, Abstract, 4:65-68 (tissue-conduction microphone provides a "transmitter keying signal"), 8:3-16 ("throat microphone 54 detects the speech signal which … turns OFF the receiver power switch" and "the receiver is turned ON again as soon as the [user] stops speaking"); Ex. 1002 ¶147.) Thus, Alcivar's tissue-conduction microphone is used to determine when a voice signal is present or absent, and can be used to determine when a voice signal is likely greater or smaller than a noise signal (e.g., Alcivar's tissue-conduction microphone and system is a VAD). (*Id.*) Accordingly, a POSITA would have understood that Alcivar's tissue-conduction microphone could be used instead of Ikeda's signal-to-noise power ratio estimator, and optionally instead of Ikeda's step size output circuit, to control the generation of Ikeda's transfer functions. (*See supra* §VI.A.1.c; Ex. 1002 ¶147.)

b. Motivation to Combine

A POSITA would have been motivated to substitute Alcivar's tissue-conduction microphone and VAD for Ikeda's VAD for several reasons.

First, Ikeda and Alcivar address the same problem—accurately detecting voicing activity in noisy environments. (Ex. 1003, 3:32-61; Ex. 1005, Abstract, 1:5-8, 1:25-27, 1:55-62; Ex. 1002 ¶149.)

Second, Alcivar suggests the combination. Ikeda discloses the need for accurately determining periods when voicing activity is present and periods when voicing activity is absent. (Ex. 1003, 3:32-54; Ex. 1002 ¶150.) A POSITA would have been motivated to use a tissue-conduction microphone or other vibration sensor, as disclosed in Alcivar, instead of Ikeda's method of detecting voicing activity because, as Alcivar explains, tissue-conduction microphones can "discriminate against unwanted noises … without having to resort to more elaborate signal processing techniques." (Ex. 1005, 5:8-12; Ex. 1002 ¶150.) A POSITA would have understood that a tissue-conduction microphone (e.g., vibration-based) VAD would be a cheaper, simpler option than Ikeda's acoustic microphone-based VAD for determining periods when voicing activity is present. (Ex. 1002 ¶150.)

Third, Ikeda expresses the need for accuracy when determining periods with or without voicing activity. (Ex. 1003, 3:32-54; Ex. 1002 ¶151.) Alcivar discloses that its tissue-conduction microphone is particularly useful in high-noise

environments. (Ex. 1005, Abstract, 1:5-20 (acoustic microphone-based systems are "highly susceptible to false keying … by non-speech noises"), 1:25-27, 1:55-62 (system is "particularly suited for high noise environment communication systems"); Ex. 1002 ¶151.) Thus, a POSITA would have used Alcivar's vibration-based VAD with Ikeda's system to detect voice activity because Alcivar's doing so would improve the accuracy of Ikeda's system in high-noise environments. (Ex. 1002 ¶151.)

Fourth, the use of vibration sensors to detect voicing activity was well known. (*Supra* §VI.A.1.e; Ex. 1002 ¶152.) Thus, this combination represents nothing more than the simple addition of one known element (a tissue-conduction microphone and VAD as in Alcivar) to another known element (Ikeda's adaptive noise canceler) to obtain the predictable results of improved voice activity detection in noisy environments. (Ex. 1002 ¶152; *see KSR*, 550 U.S. at 417. Moreover, the combination represents the use of a known technique (the incorporation of a tissue-conduction microphone and VAD as in Alcivar) to improve a similar device and method (Ikeda's system) in the same way (improved performance in noisy environments). (*Id.*) Finally, the combination applies a known technique (tissue-conduction microphone and VAD as in Alcivar) to a known device and method (Ikeda's system) that is ready for improvement and yields predictable results (a system with improved voice detection). (*Id.*)

A POSITA would have reasonably expected success in combining Alcivar's tissue-conduction microphone and VAD with Ikeda's system because Alcivar discloses that its system "can be used in other communication systems[.]" (Ex. 1005, 1:55-62; *id.*, 1:5-8, 1:34-36 (system "can be easily incorporated in existing communication systems"); Ex. 1002 ¶153.) A POSITA would also have expected success because the signal processing of Ikeda's adaptive noise canceler does not depend on the type of voice signal detector that is used as long as the sensor accurately detects periods of voicing activity and inactivity. (Ex. 1002 ¶154.) Similarly, a tissue-conduction microphone or other vibration sensor would detect voice signals in a predictable manner regardless of how such detected signals were used. (*Id.*)

2. Claim 12

Alcivar discloses the additional limitation of claim 12 because it discloses a tissue-conduction microphone placed "in good contact with the neck tissue." (Ex. 1005, 5:16-17; *id.*, 4:67-5:8; *supra* §VI.B.1.a; Ex. 1002 ¶155.) A POSITA would have understood that Alcivar's tissue-conduction microphone is a mechanical sensor at least because it mechanically detects vibrations in the user's skin (e.g., through physical contact with the skin). (Ex. 1002 ¶155.)

3. Claim 13

Alcivar discloses the additional limitation of claim 13 because a POSITA would have understood that Alcivar's throat-conduction microphone is a skin-surface microphone in physical contact with skin of a user and/or a human tissue vibration detector. (*Supra* §§VI.B.1.a, VI.B.2; Ex. 1002 ¶156.)

4. Claim 14

Alcivar discloses the additional limitation of claim 14 because it discloses sensing tissue vibrations on and near the surface of the neck. (*Supra* §§VI.B.1.a, VI.B.3; Ex. 1002 ¶157.) Alcivar also discloses sensing vibrations using a tissue-conduction microphone "placed against the chest cavity" of the user. (Ex. 1005, 5:6-8; Ex. 1002 ¶157.)

5. Claim 18

Independent claim 18 recites several components addressed in claim 11, including a processor that generates transfer functions, a receiver, microphones, and a voicing sensor. These limitations are disclosed by the prior art. (*Supra* §§VI.A.1, VI.A.6, VI.B.1; Ex. 1002 ¶¶159-66.)

6. Claim 20

Alcivar discloses the additional limitation of claim 20. (*Supra* §VI.B.4; Ex. 1002 ¶168.)

7. Claim 1

Independent claim 1 recites functions addressed in claim 11, including receiving acoustic signals, receiving a voice activity signal, and removing noise. These limitations are disclosed by the prior art for the reasons discussed above. (*Supra* §VI.B.1; Ex. 1002 ¶¶169-72, 178.) Claim 1 also recites the following limitations, which are likewise disclosed by the prior art.

a. Generating a VAD Signal

As discussed above, Alcivar discloses that its tissue-conducting microphone forms part of a VAD. (*Supra* §VI.B.1.a; Ex. 1002 ¶174.) Alcivar's system receives voice activity signals using the tissue-conducting microphone and uses them to generate a "transmitter keying signal" (e.g., a VAD signal). (Ex. 1005, 4:65-67; Ex. 1002 ¶174.) Alcivar further processes the output of its tissue-conducting microphone, including using a "Schmitt trigger circuit 68," which "provide[s] sharply defined ON/OFF levels and some degree of immunity to low-level random noise inputs." (Ex. 1005, 5:55-67.) The signal is then sent to "audio detector 62." (*Id.*, 6:1-11.) A POSITA would have understood that the output of Alcivar's audio detector is a VAD signal that denotes when the user is or is not speaking. (*Id.*, 5:55-67; *id.*, 8:3-16; Ex. 1002 ¶174.)

Thus, Alcivar discloses and/or renders obvious this limitation. (Ex. 1002 ¶¶173-75.) A POSITA would have been motivated to combine Ikeda and Alcivar as discussed above. (*Supra* §VI.B.1.b; Ex. 1002 ¶175.)

b. Generating Transfer Functions

Ikeda discloses this limitation. (*Supra* §§VI.A.1.c.i-ii; Ex. 1002 ¶176.)

Ikeda discloses that a VAD signal is used to indicate when voicing activity is present or absent and to control the generation of Ikeda's transfer functions. (*Supra* §§VI.A.1.c.i-ii.) A POSITA would have understood that, when combining Alcivar's VAD with Ikeda's system (*supra* §§VI.B.1.a-b), Alcivar's VAD would likewise provide a VAD signal that Ikeda's system would use in lieu of Ikeda's VAD signal for the same purpose of controlling the generation of Ikeda's transfer functions. (Ex. 1002 ¶177.)

8. Claim 3

The additional limitation of claim 3 would have been obvious to a POSITA in view of Ikeda. (*Supra* §VI.A.11; Ex. 1002 ¶180.)

Additionally, Alcivar discloses that in the context of an underwater communication system, in which a diver is wearing a mask, the mask may have "sharp, well-defined resonances" below a certain acoustic frequency, which causes acoustic microphones to pick up reverberations below that frequency. (Ex. 1005, 2:9-12.) Alcivar discloses methods for reducing that reverberation. (*Id.*, 2:9-22.) A

POSITA would have understood that Ikeda's system would also have worked to reduce the reverberations created by Alcivar's diving mask. (Ex. 1002 ¶181.) Thus, Alcivar discloses and/or renders obvious this limitation. (*Id.*)

9. Claims 6-8

Alcivar discloses the additional limitations of claims 6-8. (*Supra* §§VI.B.2-4; Ex. 1002 ¶¶184-86.)

C. Ground 3: Ikeda, Puthuff or Alcivar, and Hussain

The combinations in Ground 1 (Ikeda and Puthuff) and/or Ground 2 (Ikeda and Alcivar), further in view of Hussain, render dependent claims 3, 9, and 15 obvious. Each parent claim is obvious for the reasons discussed above. (*Supra* §§VI.A-B; Ex. 1002 ¶187.)

Hussain discloses an "adaptive noise cancellation scheme" that improves performance in reverberant environments by processing acoustic signals in separate sub-bands. (Ex. 1007, 2611-13, Fig. 1; Ex. 1002 ¶188.)

Like Ikeda, Hussain uses a dual microphone array. (Ex. 1007, 2611-13, Fig. 1.) A filter bank separates signals received by the microphones into individual sub-bands for processing. (*Id.*) Hussain then uses "an adaptive filter" to determine a "differential acoustic-path transfer function" for individual sub-bands. (*Id.*, 2612.) When voicing activity is detected, the transfer function is used "to process the noisy speech signal" and output a denoised speech signal. (*Id.*) Hussain applies sub-band

processing ("SBP") to each sub-band, reconstructs the processed signals, and outputs the denoised processed signal:

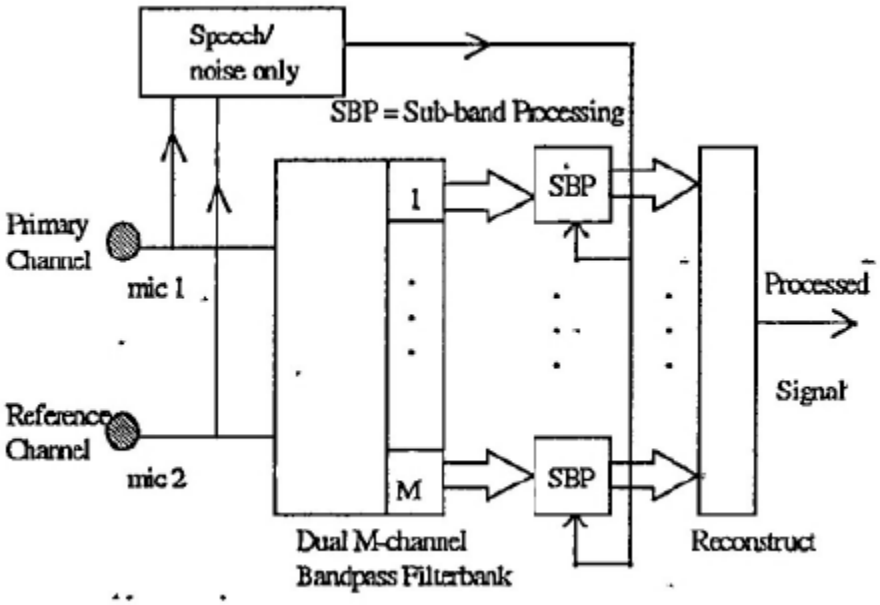

(Ex. 1007, Fig. 1; Ex. 1002 ¶189.)

1. Claim 3

The additional limitation of claim 3 would have been obvious in view of the references discussed above (*supra* §§VI.A.11, VI.B.8), and is also obvious in further view of Hussain. Hussain describes "results of comparative experiments with simulated anechoic data extended to include simulated reverberant data." (Ex. 1007, 2611.) Hussain's method addresses the well-known problem of noise in, for example, "hands-free telephones [and] portable phones" which includes "the presence of multiple noise sources [and] reverberant environments." (*Id.*) Hussain's sub-band processing improves noise cancellation "in reverberant environments"

where "[m]ulti-band processing has been found to be important in combating reverberation effects." (*Id.*)

Thus, Hussain discloses an environment matching the additional limitation of claim 3 and discloses the use of devices like Ikeda's in such an environment. (Ex. 1002 ¶¶191-92.) It also explains why a POSITA would have been motivated to use a device like Ikeda's in a reverberant environment (e.g., because that is where people used hands-free telephones and portable phones). (*Id.*) Finally, Hussain discloses that a POSITA would have reasonably expected success in such an environment when using a system like Ikeda's as modified by Hussain's teachings.[6] (*Id.*)

2. Claims 9 and 15

a. Dividing Acoustic Data into Sub-bands

Claims 9 and 15 depend from claims 1 and 11, respectively, and further recite "dividing acoustic data of the acoustic signals into a plurality of sub-bands." Hussain discloses a noise cancellation system employing "diverse sub-band processing" where acoustic signals are divided into "a set of sub-bands provided by a filter bank" as in Figure 1:

[6] Additionally, a POSITA would have been motivated to combine Hussain with Ikeda, and would have reasonably expected success in doing so, for the reasons discussed below. (*Infra* §VI.C.3; Ex. 1002 ¶192.)

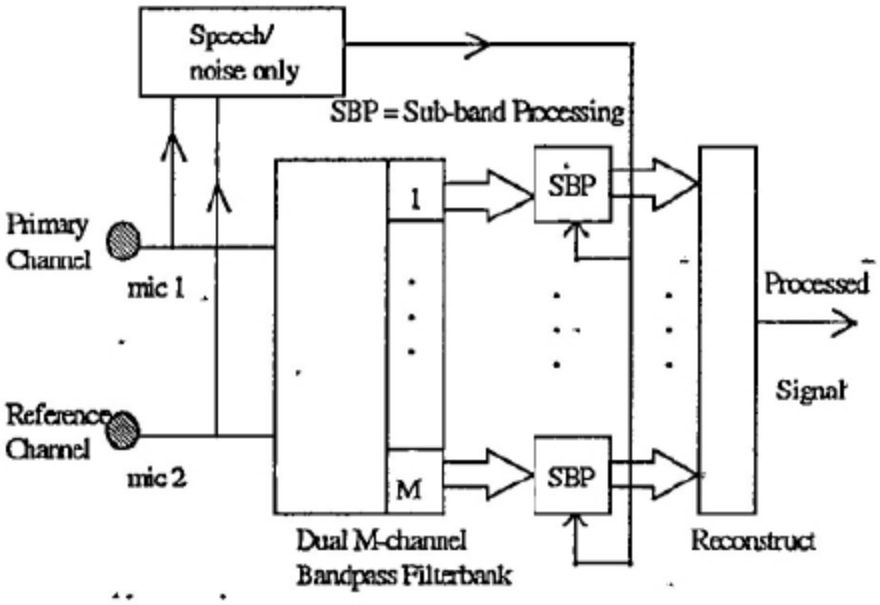

(Ex. 1007, 2611, Fig. 1.) Thus, Hussain discloses this limitation. (Ex. 1002 ¶193.)

Additionally, Puthuff discloses that acoustic signals can be "split into more than two bands" using digital signal processing so that only noisy sub-bands are affected by signal processing. (Ex. 1004, 16:4-15; *id.*, 6:15-25; Ex. 1002 ¶194.) Thus, Puthuff also discloses this limitation. (Ex. 1002 ¶194.)

b. Generating a Sub-band Transfer Function

Claims 9 and 15 further recite "generating a sub-band transfer function representative of the ratio of acoustic energies received in each microphone in each sub-band." Ikeda discloses generating transfer functions representative of a ratio of acoustic energies received in each microphone. (*Supra* §§VI.A.1.c.i-ii; Ex. 1002 ¶195.)

Additionally, Hussain's system identifies "a differential acoustic path transfer function during a noise only period in intermittent speech" within "a set of sub-bands provided by a filter bank." (Ex. 1007, 2611.) Accordingly, Hussain also discloses this limitation. (Ex. 1002 ¶196.) Furthermore, it would have been obvious to generate Ikeda's transfer functions using Hussain's sub-band processing methods. (*Id.*) Thus, this limitation would have been obvious in view of Ikeda and Hussain. (*Id.*)

c. Removing Acoustic Noise

Claims 9 and 15 further recite "removing acoustic noise from each of the plurality of sub-bands using the sub-band transfer function, wherein a plurality of denoised acoustic sub-band signals are generated." Hussain discloses removing acoustic noise from sub-bands using sub-band transfer functions through a function that "models the differential acoustic path transfer function between the microphones" and applies the transfer function to result in an "output E [that is] a noise reduced, filtered version of the sub-band speech signal." (Ex. 1007, 2612.) Thus, Hussain discloses this limitation. (Ex. 1002 ¶197.)

d. Combining Sub-band Signals

Claims 9 and 15 further recite "combining the plurality of denoised acoustic subband signals to generate the denoised acoustic signal." Hussain discloses combining the plurality of denoised acoustic sub-band signals output by sub-band

processing circuits, indicated as "SBP" blocks in Figure 1, by combining them in a "reconstruct" circuit resulting in a single denoised "processed signal":

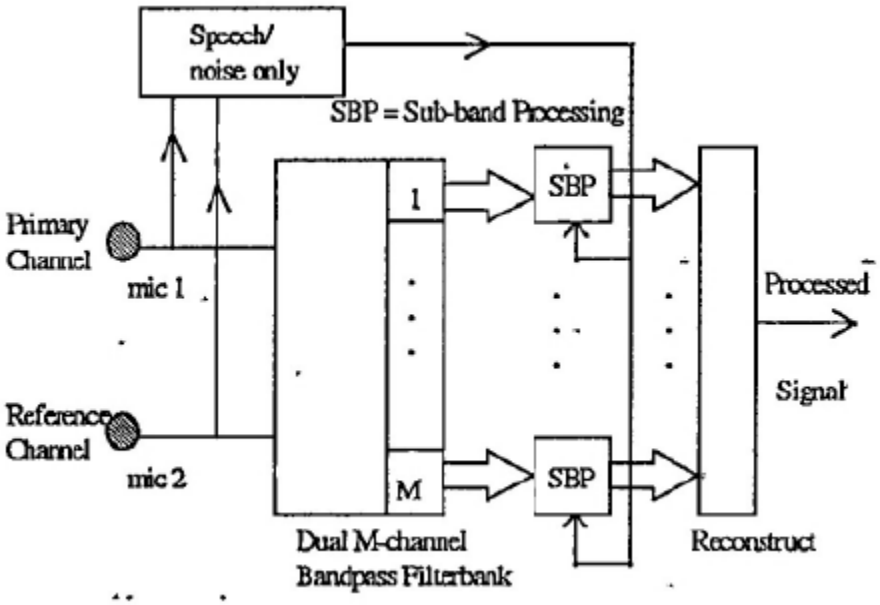

(Ex. 1007, Fig. 1.) Thus, Hussain discloses this limitation. (Ex. 1002 ¶198.)

3. Motivation to Combine

A POSITA would have been motivated to combine the teachings of Ikeda (as modified by Puthuff or Alcivar) and Hussain for several reasons. (Ex. 1002 ¶¶199-203.)

First, Ikeda and Hussain both address the same problem—removing noise from a desired speech signal using adaptive methods. (Ex. 1003, 3:32-60, 4:6-25; Ex. 1007, 2611; Ex. 1002 ¶200.)

Second, Hussain discloses that operating on individual sub-bands "combat[s] reverberation effects" and produces "more than 6dB SNR improvements over

conventional full-band methods in reverberant environments." (Ex. 1007, 2611.) Thus, a POSITA would have been motivated to implement Ikeda's adaptive noise cancellation methods on individual sub-bands as in Hussain for improved performance. (Ex. 1002 ¶201.)

Third, Hussain discloses sub-band processing's improved performance over full-band noise cancellation systems that "model acoustic path transfer functions." (Ex. 1007, 2611; Ex. 1002 ¶202.) Thus, combining Hussain and Ikeda to perform Ikeda's noise cancellation on individual sub-bands would have been nothing more than combining prior art elements (Ikeda's transfer function-based noise cancellation approach and Hussain's sub-band processing) according to known methods to yield the predictable results of improved noise cancellation performance in reverberant environments. (Ex. 1002 ¶202); *KSR*, 550 U.S. at 417. Moreover, the combination represents the use of a known technique (sub-band processing as in Hussain) to improve a similar device and method (Ikeda's system) in the same way. (*Id.*) Finally, the combination applies a known technique (sub-band processing as in Hussain) to a known device and method (Ikeda's system) that is ready for improvement and yields predictable results (improved noise cancellation performance in reverberant environments). (*Id.*)

A POSITA would have had a reasonable expectation of success in combining Ikeda and Hussain because they relate to similar systems that perform adaptive noise

cancellation. (Ex. 1002 ¶203.) Moreover, performing adaptive noise cancellation on individual sub-bands was a well-understood technique that would perform predictably in an adaptive noise reduction system such as Ikeda's. (*Id.*)

4. Hussain Was Publicly Available.

Hussain was publicly available more than one year before the '091 patent's earliest claimed priority date as part of published materials from the 5th European Conference on Speech Communication and Technology: Eurospeech '97, which was held September 22-25, 1997, and attended by around 1,000 participants. (Ex. 1007, i-ii, vi; Ex. 1016 (informing participants that "hard-copy proceedings of the conference (five volume 3256 pages)" were "printed and available to interested people"); Ex. 1017, 7 (Hussain was found at "Volume 5 pages 2611-2614"); Ex. 1018 (online order form for Eurospeech proceedings); Ex. 1019, 1, 3, 15; Ex. 1015 ¶¶17, 21, 24-31, Appxs. B, D, G-J.) Eurospeech '97 conference papers, including Hussain, were distributed to conference attendees and were available to POSITAs outside the conference, as confirmed by the records for The Ohio State University and Rutgers University libraries and archived web pages. (Ex. 1015 ¶¶17, 21, 24-31, Appxs. B, D, G-J; Ex. 1016; Ex. 1017; Ex. 1018; Ex. 1019, 1, 3, 15.) Those libraries, both indicating a 1997 publication date, cataloged Eurospeech '97 conference papers on June 30, 2000, and July 30, 1999, respectively, and they were shelved and made available to the public shortly thereafter. (Ex. 1015 ¶¶14-21, Appxs. A-D.) At least

nine libraries cataloged Eurospeech '97, each indicating a 1997 publication date. (*Id.* ¶¶22-23, Appxs. E, F.)

D. Ground 4: Ikeda, Puthuff or Alcivar, and Sasaki

Dependent claims 10 and 17 would have been obvious in view of the combinations in Ground 1 (Ikeda and Puthuff) and/or Ground 2 (Ikeda and Alcivar), further in view of Sasaki. Each parent claim is obvious for the reasons discussed above. (*Supra* §§VI.A-B; Ex. 1002 ¶204.)

1. Claims 10 and 17

Claims 10 and 17 depend from claims 1 and 11, respectively, and further recite "wherein the at least two acoustic microphones comprise a first directional acoustic microphone and a second directional acoustic microphone, wherein the first directional acoustic microphone and the second directional acoustic microphone selectively attenuate the acoustic signals based on the direction of arrival." Sasaki discloses this limitation. (Ex. 1002 ¶¶205-11.)

Sasaki describes a system with a microphone array in which "main input microphone 11 is unidirectional and placed with its most sensible side in the front direction" while "reference input microphone [21] is also unidirectional and is placed with its most sensible side in the rear direction." (Ex. 1008, 6:6-20.) Figure 6 shows the two microphones' sensitivity patterns:

FIG. 6

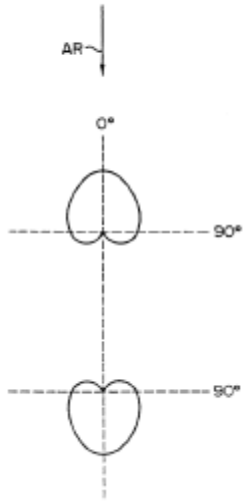

(*Id.*, Fig. 6.) As shown, "the reference input microphone 21 has a low sensitivity in the desired sound arrival direction and a high sensitivity in the rear direction or noise arrival direction" while the main input microphone has a high sensitivity in the direction of the desired sound. (*Id.*, 6:18-20.) Thus, the two microphones are directional acoustic microphones that selectively attenuate acoustic signals based on the direction of arrival. (Ex. 1002 ¶206.) Accordingly, Sasaki discloses this limitation. (*Id.* ¶¶205-06.)

2. Motivation to Combine

A POSITA would have been motivated to combine the teachings of Ikeda and Sasaki, and to use directional microphones in Ikeda's system, for several reasons. (Ex. 1002 ¶¶207-11.)

First, Ikeda and Sasaki both address the same problem—removing noise from a desired speech signal using adaptive methods. (Ex. 1003, 3:32-60, 4:6-25; Ex. 1008, 3:36-54, 4:17-28; Ex. 1002 ¶208.)

Second, because Ikeda requires two microphones, but does not disclose a specific type of microphone, a POSITA would have been motivated to look to Sasaki's teachings on the use of directional microphones so that Ikeda's first microphone receives the main signal while the second microphone does not, improving the accuracy of Ikeda's system. (Ex. 1003, 4:49-53; Ex. 1002 ¶209.)

Third, directional microphones were well known and both Ikeda and Sasaki disclose a primary microphone for detecting a desired signal and a reference microphone for detecting primarily noise. (Ex. 1003, 4:49-53; Ex. 1008, Abstract, 6:6-20; Ex. 1002 ¶210.) Thus, this combination represents nothing more than the simple addition of one known element (directional microphones as in Sasaki) to another known element (microphone array as in Ikeda) to obtain the predictable results of improved voice activity detection in noisy environments. (Ex. 1002 ¶210); *see KSR*, 550 U.S. at 417. Moreover, the combination represents the use of a known technique (directional microphones as in Sasaki) to improve a similar device and method (Ikeda's) in the same way. (*Id.*) Finally, the combination applies a known technique (directional microphones as in Sasaki) to a known device and method

(Ikeda's) that is ready for improvement and yields predictable results (system with improved voice activity detection). (*Id.*)

A POSITA would have had a reasonable expectation of success in combining Ikeda and Sasaki because directional microphones were well known and using them to selectively attenuate a desired signal and a reference signal based on direction of arrival would have yielded a predictable result. (Ex. 1002 ¶211.)

E. Ground 5: Grounds 1-4 References and Bartlett

Each limitation of claims 11-20 is disclosed and/or rendered obvious for the reasons discussed in the Grounds above. (*Supra* §§VI.A-D; Ex. 1002 ¶212.) To the extent PO argues it was nonobvious to use a processor coupled among the microphones and voicing sensor to generate transfer functions, the use of such a processor would have been obvious in view of Bartlett.

Bartlett discloses a "noise-canceling" system that contains two microphones (30 and 32), an adaptive filter, and a digital signal processor ("DSP"). (Ex. 1006, 6:66-7:8.) Bartlett performs signal processing (e.g., generating a plurality of transfer functions) through an "adaptive algorithm 120 [which] is implemented by, for example, a digital signal processor." (*Id.*, 6:66-67.) Accordingly, Bartlett discloses or renders obvious this limitation. (Ex. 1002 ¶213.)

A POSITA would have been motivated to combine the teachings of Ikeda with Bartlett, and to use a processor coupled with the acoustic receiver (and voicing

sensor) to generate Ikeda's transfer functions, for several reasons. (Ex. 1002 ¶¶214-19.) First, Ikeda and Bartlett address the same problems—accurately detecting speech and removing noise from speech signals using adaptive methods. (Ex. 1003, Abstract, 1:4-8, 3:56-61; Ex. 1006, 1:5-10, 1:41-53, 2:14-24, 2:55-63, 4:9-13, 6:60-7:17; Ex. 1002 ¶215.)

Second, Ikeda discloses adaptive filters for generating transfer functions, and Bartlett discloses that an adaptive filter is "exemplarily implemented by a digital signal processor." (Ex. 1006, 7:7-8.) Thus, Bartlett's disclosure would motivate a POSITA to use a processor for performing signal processing in Ikeda's system. (Ex. 1002 ¶216.)

Third, processors were well known to provide fast, robust ways to perform signal processing. (*Id.* ¶217.) Thus, the use of a processor as claimed would have been nothing more than the simple substitution of one known element (a processor as in Bartlett) for another (another method of generating transfer functions) to obtain predictable results. (*Id.*); *see KSR*, 550 U.S. at 417. Moreover, the combination represents the use of a known technique (using a processor) to improve a similar device and method (Ikeda's system) in the same way. (*Id.*) The combination also applies a known technique (using a processor) to a known device and method (Ikeda's system) that is ready for improvement and yields predictable results. (*Id.*) Fourth, noise cancellation systems were commonly used with electronic devices

having processors. (Ex. 1002 ¶218.) A POSITA would have been motivated to generate transfer functions and perform noise reduction with the included processor for a simplified, cheaper, and more robust design. (*Id.*)

A POSITA would have reasonably expected success in combining Ikeda and Bartlett because they relate to similar systems and because processors were conventional components. (*Id.* ¶219.) Using a processor to generate transfer functions would be a conventional use of a processor that would yield predictable results. (*Id.*)

VII. SECONDARY CONSIDERATIONS OF NONOBVIOUSNESS

Secondary considerations should be considered but do not control the obviousness conclusion. *Newell Cos. v. Kenney Mfg. Co.,* 864 F.2d 757, 768 (Fed. Cir. 1988). Where, as here, a strong *prima facie* obviousness showing exists, even relevant secondary considerations supported by substantial evidence may not dislodge obviousness conclusion. *Leapfrog Enters. v. Fisher-Price, Inc.,* 485 F.3d 1157, 1162 (Fed. Cir. 2007). Petitioner is aware of no evidence supporting a claim for secondary considerations.

VIII. DISCRETIONARY DENIAL UNDER §314(a) IS NOT APPROPRIATE.

The Board should decline to exercise its discretion under §314(a).

A. Co-Pending Litigation (*Fintiv*)

Efficiency, fairness, and the merits support institution despite the existence of co-pending litigation. *Apple v. Fintiv,* IPR2020-00019, Paper 11 (P.T.A.B. Mar. 20, 2020) ("*Fintiv*").

1. Factor 1: Potential Stay

On February 28, 2023, PO sued Petitioner for infringement of the '091 Patent in *Jawbone Innovations, LLC v. LG Electronics Inc.*, No. 2:23-cv-00078-JRG-RSP (E.D. Tex.), and no scheduling conference has yet been held. Petitioner will move to stay the co-pending litigation pending resolution of this and related IPRs. *See Google LLC v. Jawbone Innovations, LLC,* IPR2022-00649*,* Paper 13 (P.T.A.B. Oct. 31, 2022); *Amazon.com, Inc. v. Jawbone Innovations, LLC*, IPR2023-00253, Paper 9 (P.T.A.B. June 6, 2023) (instituting IPRs involving '091 patent).

The EDTX considers the following factors in determining whether to grant a stay pending IPR: "(1) whether the stay will unduly prejudice the nonmoving party, (2) whether the proceedings before the court have reached an advanced stage, including whether discovery is complete and a trial date has been set, and (3) whether the stay will likely result in simplifying the case before the court." *Uniloc 2017 LLC v. Samsung Elecs. Am., Inc.*, No. 2:19-cv-00259-JRG-RSP, 2020 WL 1433960, at *2 (E.D. Tex. Mar. 24, 2020). In this instance, because multiple IPRs have already been instituted on this patent, prejudice to PO due to staying the related litigation

pending resolution of the IPRs is minimal. Similarly, the related litigation is still in the pleading stages and no trial date has been set. Finally, a stay pending resolution of the IPRs against the '091 Patent would simplify the issues before the court. Since all factors for evaluating a motion to stay weigh in favor of granting such a motion, a stay is appropriate in this instance. Thus, this factor weighs against denial.

2. Factor 2: Proximity of Trial to FWD

The EDTX has not set a trial date. Indeed, no case management conference has been scheduled. Thus, this factor weighs against discretionary denial. *See, e.g.*, *Global Tel*Link Corp. v. HLFIP Holding, Inc.*, IPR 2021-00444, Paper 14 at 16-19 (P.T.A.B. Jul. 22, 2021) ("The lack of a scheduled trial date . . . typically weighs against exercising discretion to deny the Petition."); *GAF Materials LLC v. Kirsch Research and Dev., LLC*, IPR2021-00192, Paper 14 at 12-13 (P.T.A.B. May 25, 2021) (finding that the second *Fintiv* factor "weighs against exercise of [the Board's] discretion to deny institution" when no trial date has been set).

3. Factor 3: Investment in Parallel Proceeding

PO served its complaint on February 28, 2023, and has not yet served any contentions or conducted any discovery. Petitioner has not yet answered the complaint, served any contentions, or conducted any discovery. The parties have thus invested very little in the district court action. The parties have not briefed claim construction. No expert reports have been served.

The EDTX has not established a case schedule. However, even if the EDTX imposes certain deadlines over the next 6 months (e.g., fact discovery, claim construction proceedings, etc.), any investment in those activities does not weigh in favor of discretionary denial. Much work will still remain, including expert reports, expert discovery, dispositive motions, pretrial motions, and trial. The "remaining investment and Petitioner's diligence" in filing the petition outweigh any investments made. *Samsung Elec. Am. Inc. v. Snik LLC*, IPR2020-01428, Paper 10 at 11 (P.T.A.B. Mar. 9, 2021); *Google LLC v. Jawbone Innovations LLC*, IPR2022-00630, Paper 10 at 15 (P.T.A.B. October 28, 2022).

4. Factor 4: Overlapping Issues

If this IPR is instituted and the Litigation is stayed, Petitioner could not pursue in the Litigation any invalidity ground raised or that could have been reasonably raised in this IPR. *Cal. Inst. of Tech. v. Broadcom Ltd.*, 25 F.4th 976 (Fed. Cir. 2022). Thus, little concern of duplicative efforts or conflicting decisions exists.

If the Litigation is not stayed, Petitioner hereby stipulates not to argue in the Litigation invalidity of the '091 patent based on the grounds advanced in this petition. This factor weighs against discretionary denial. *Sand Revolution II, LLC v. Cont'l Intermodal Grp.-Trucking LLC*, IPR-2019-01393, Paper 24 at 11-12 (P.T.A.B. June 16, 2020) (informative) ("*Sand Revolution*"); *Google LLC v.*

Jawbone Innovations, LLC, IPR2022-00630, Paper 10 at 16-17 (P.T.A.B. Sept. 13, 2022).

5. Factor 5: The Parties

The parties are the same, but it is unlikely that the Litigation will go to trial before a final written decision is entered in this IPR. Thus, this factor is neutral. *See Google*, IPR2022-00630, Paper 10 at 17.

6. Factor 6: Other Circumstances

To Petitioner's knowledge, other than the Amazon IPR petition which Petitioner seeks to join, the prior art here has never been considered by the PTO, any court, or any jury. The petition's merits are particularly strong, which favors institution. *Fintiv*, IPR2020-00019, Paper 11 at 18. Moreover, denying institution would negate Congress's intent in providing a 1-year period to file petitions and would encourage forum shopping as patent owners look to shield their patents from PTAB scrutiny by seeking judges with aggressive trial schedules.

Additionally, the PTAB has already instituted IPRs challenging the claims of the '091 patent. *Google LLC v. Jawbone Innovations, LLC*, IPR2022-00649, Paper 13 (P.T.A.B. Oct. 31, 2022); *Amazon, Inc. v. Jawbone Innovations, LLC*, IPR2023-00253, Paper 9 (P.T.A.B. June 6, 2023). Thus, the Board will be intimately familiar with the patent and claims as well as the relevant technology. Judicial efficiency

favors having the same panel consider the patent's validity in view of the additional prior art references Petitioner has identified.

Accordingly, the *Fintiv* analysis favors institution.

B. Prior Petitions for *Inter Partes* Review (*General Plastic*)

Petitions for IPR have previously been filed by Google (IPR2022-00649, filed March 15, 2022); by Apple/Samsung (IPR2022-01147, filed June 16, 2022); by Meta (IPR2023-01127, filed June 27, 2023); and by Amazon (IPR2023-00253, filed November 22, 2022), which Petitioner now seeks to join. The prior petitions do not warrant discretionary denial under *General Plastic Indus. Co., Ltd. v. Canon Kabushiki Kaisha*, IPR2016-01357, Paper 19 at 15-16 (P.T.A.B. Sept. 6, 2017) (precedential). Indeed, the Board has found that the *General Plastic* factors are "not particularly relevant" in this situation, *i.e.*, where a different petitioner files a "me-too" or "copycat" petition with a timely motion for joinder. *Central Security Group*, IPR2019-01609, Paper 11 at 8; *Celltrion, Inc. v. Genentech, Inc.*, IPR2018-01019, Paper 11 at 9-11 (P.T.A.B. Oct. 30, 2018).

Even if the Board were to consider *General Plastic*, discretionary denial is unwarranted. LGE and the prior petitioners are not the same party and have no significant relationship. They are not co-defendants. They are competitors accused of infringement—in different actions pending in different courts—based on sales of different products. This weighs against denial. *NetNut Ltd. v. Bright Data Ltd.*,

IPR2021-00465, Paper 11 at 9 (P.T.A.B. Aug. 12, 2021) (declining to extend *General Plastic* to different petitioner with no relationship to previous petitioners); *Mercedes-Benz USA, LLC v. Carucel Invs. L.P.*, IPR2019-01404, Paper 12 at 11-12 (P.T.A.B. Jan. 22, 2020).

The remaining factors consider timing issues, e.g., when Petitioner became aware of prior art, whether the PO or Board responded to prior petitions, and the length of time that has passed. But the sequential IPR filings here were caused by PO's sequential district court filings and should not be held against Petitioner. Specifically, PO sued Samsung in May 2021 (2:21-cv-00186-JRG-RSP (E.D. Tex.)). PO waited four months before suing Google and Apple (6:21-cv-00985-ADA, 6:21-cv-00984-ADA (W.D. Tex.)). PO then waited another two months to sue Amazon. PO then waited over a year to sue Petitioner. The Board should not deny Petitioner's petition merely because PO sued other defendants earlier. *Toshiba*, IPR2018-01538, Paper 11 at 21-22 (PO's complaint about multiple IPRs "is not persuasive when the volume appears to be a direct result of its own litigation activity"); *id.* at 22 (it was not unfair for a petitioner to file close to one-year bar date even when co-defendants in related litigation "with distinct interests" and "distinct litigation strategies" filed earlier).

IX. DISCRETIONARY DENIAL UNDER §325(d) IS NOT APPROPRIATE

The Office has not previously considered "the same or substantially the same prior art or arguments." 35 U.S.C. §325(d). Here, all grounds rely on Ikeda, which the PTO has never considered. Nor has the PTO considered "substantially the same prior art or arguments." In prosecution, PO argued that the references the Examiner applied did not teach limitations regarding generating transfer functions. In response to those arguments, the Examiner allowed the claims. However, the references herein clearly disclose those claim elements. Accordingly, they are not—and could not be—cumulative of previously-considered references. Furthermore, while the '091 patent is the subject of other *inter partes* review petitions, none of those petitions rely on Ikeda or Puthuff in their grounds, other than the previously instituted Amazon IPR, which this petition seeks to join. Thus, the Board should not deny institution under §325(d).

X. MANDATORY NOTICES

A. Real Parties-In-Interest (37 C.F.R. §42.8(b)(1))

LG Electronics Inc. is the real party-in-interest.

B. Related Matters (37 C.F.R. §42.8(b)(2))

To the best knowledge of Petitioner, the '091 patent is or has been involved in the following district court litigations and petitions for *inter partes* review:

Name	Number	Court	Filed
Jawbone Innovations, LLC v. LG Electronics Inc.	2:23-cv-00078	E.D. Tex.	Feb. 28, 2023
Jawbone Innovations, LLC v. Amazon.com, Inc.	5:22-cv-06727	N.D. Cal.	Nov. 29, 2021 (transferred from E.D. Tex. on Nov. 1, 2022)
Jawbone Innovations, LLC v. Amazon.com, Inc.	2:21-cv-00435	E.D. Tex.	Nov. 29, 2021
Jawbone Innovations, LLC v. Apple Inc.	6:21-cv-00984	W.D. Tex.	Sept. 23, 2021
Jawbone Innovations, LLC v. Google LLC	6:21-cv-00985	W.D. Tex.	Sept. 23, 2021
Jawbone Innovations, LLC v. Samsung Electronics Co., Ltd.	2:21-cv-00186	E.D. Tex.	May 27, 2021
Jawbone Innovations, LLC v. Sony Electronics, Inc.	2:23-cv-01161	D.N.J.	Feb. 28, 2023
Jawbone Innovations, LLC v. HTC Corporation	2:23-cv-00077	E.D. Tex.	Feb. 28, 2023
Jawbone Innovations, LLC v. Guangdong Oppo Mobile Telecommunications Corp., Ltd., d/b/a OPPO	2:23-cv-00079	E.D. Tex.	Feb. 28, 2023
Jawbone Innovations, LLC v. Panasonic Holdings Corporation	2:23-cv-00081	E.D. Tex.	Feb. 28, 2023
Jawbone Innovations, LLC v. ZTE Corporation	2:23-cv-00082	E.D. Tex.	Feb. 28, 2023
Jawbone Innovations, LLC v. Meta Platforms, Inc. d/b/a Meta	6:23-cv-00158	W.D. Tex.	Feb. 28, 2023
Jawbone Innovations, LLC v. Google LLC	3:23-cv-00466	N.D. Cal.	Feb. 1, 2023
Petition for *Inter Partes* Review	IPR2023-01127	PTAB	June 27, 2023

Petition for *Inter Partes* Review	IPR2023-00253	PTAB	Nov. 22, 2022
Petition for *Inter Partes* Review	IPR2022-01147	PTAB	June 16, 2022
Petition for *Inter Partes* Review	IPR2022-00649	PTAB	Mar. 15, 2022

C. Lead and Backup Counsel (37 C.F.R. §42.8(b)(3))

LGE provides the following designation of counsel:

Lead Counsel	Back-up Counsel
Indranil Mukerji (Reg. No. 46,944) imukerji@willkie.com LG_Jawbone_IPR_WFG@willkie.com Postal and Hand-Delivery Address: Willkie Farr & Gallagher LLP 1875 K Street, N.W. Washington, DC 20006-1238 Telephone: (202) 303-1190 Facsimile: (212) 728-8111	John C. Moulder (Reg. No. 70,490) cmoulder@willkie.com Postal and Hand-Delivery Address: Willkie Farr & Gallagher LLP 1875 K Street, N.W. Washington, DC 20006-1238 Telephone: (202) 303-1069 Facsimile: (202) 303 2000

Pursuant to 37 C.F.R. §42.10(b), a Power of Attorney accompanies this Petition. The above identified lead and backup counsel are registered practitioners associated with the firm listed in that Power of Attorney.

D. Service Information (37 C.F.R. §42.8(b)(4))

Service information for counsel is provided above. LGE consents to service by email at: LG_Jawbone_IPR_WFG@willkie.com.

E. Payment of Fees (37 C.F.R. §42.103)

The fee set forth in 37 C.F.R. §42.15(a) for this petition has been paid. Any additional fees due in connection with this petition may be charged to Deposit Account 232405.

F. Grounds for Standing (37 C.F.R. §42.104(a))

LGE certifies that the '091 patent is available for IPR and that LGE is not barred or estopped from requesting IPR. This petition is being filed within one year of service of the Complaint in the parties' related district court litigation.

CONCLUSION

Petitioner respectfully requests cancellation of the challenged claims.

Respectfully submitted,

WILLKIE FARR & GALLAGHER LLP

Dated: July 5, 2023

/Indranil Mukerji/
Indranil Mukerji (Reg. No. 46,944)
John C. Moulder (Reg. No. 70,490)

Attorneys for Petitioner
LG ELECTRONICS INC.

CERTIFICATE OF COMPLIANCE

Pursuant to 37 C.F.R. §42.24(d), the undersigned certifies that foregoing **PETITION FOR INTER PARTES REVIEW OF CLAIMS 1-20 OF U.S. PATENT NO. 8,019,091**, exclusive of the parts exempted as provided in 37 C.F.R. §42.24(a), contains 13,986 words and therefore complies with the type-volume limitations of 37 C.F.R. §42.24(a).

Respectfully submitted,

WILLKIE FARR & GALLAGHER LLP

Dated: July 5, 2023

/Indranil Mukerji/
Indranil Mukerji (Reg. No. 46,944)
John C. Moulder (Reg. No. 70,490)

Attorneys for Petitioner
LG ELECTRONICS INC.

CERTIFICATE OF SERVICE

I hereby certify that a true and correct copy of the foregoing **PETITION FOR INTER PARTES REVIEW OF CLAIMS 1-20 OF U.S. PATENT NO. 8,019,091** and **EXHIBITS 1001-1019** are being served on July 5, 2023, via Federal Express overnight mail on counsel of record for U.S. Patent No. 8,019,091 as addressed below:

Mark Leonardo
Nutter McClennen & Fish LLP Seaport West
155 Seaport Blvd.
Boston, MA 02210-2604

A courtesy copy is also being served on counsel for the patent holder in the pending litigation *Jawbone Innovations, LLC v. LG Electronics Inc.*, 2:23-cv-00078-JRG-RSP (E.D. Tex. filed February 28, 2023):

Alfred R. Fabricant
Peter Lambrianakos
Vincent J. Rubino, III
Richard M. Cowell
Jacob D. Ostling
FABRICANT LLP
411 Theodore Fremd Avenue,
Suite 206 South
Rye, New York 10580
Telephone: (212) 257-5797
Facsimile: (212) 257-5796
Email: ffabricant@fabricantllp.com
Email: plambrianakos@fabricantllp.com
Email: vrubino@fabricantllp.com
Email: jostling@fabricantllp.com
Email: rcowell@fabricantllp.com
Email: jawbone@fabricantllp.com

WILLKIE FARR & GALLAGHER LLP

Dated: July 5, 2023

/Indranil Mukerji/
Counsel for Petitioner,
LG ELECTRONICS INC.