UNITED STATES PATENT AND TRADEMARK OFFICE

BEFORE THE PATENT TRIAL AND APPEAL BOARD

META PLATFORMS, INC.,

Petitioner,

v.

JAWBONE INNOVATIONS, LLC,

Patent Owner.

Patent No. 8,326,611
Filing Date: October 26, 2009
Issue Date: December 4, 2012

Inventor: Nicolas Petit, Gregory Burnett, and Zhinian Jing
Title: ACOUSTIC VOICE ACTIVITY DETECTION (AVAD) FOR ELECTRONIC SYSTEMS

PATENT OWNER'S PRELIMINARY RESPONSE

Case No. IPR2023-01128

TABLE OF CONTENTS

Page(s)

I. INTRODUCTION 1

II. THE '611 PATENT 1

III. THE RELEVANT ALLEGED PRIOR ART 4

A. Avendano (U.S. Patent No. 8,194,880) 4

B. Visser (U.S. Patent No. 7,464,029) 6

C. Avendano/Visser Combination 9

IV. CLAIM CONSTRUCTION 9

A. "filter that describes a relationship for speech between the first physical microphone and the second physical microphone" 10

V. LEVEL OF ORDINARY SKILL IN THE ART 13

VI. ARGUMENT 13

A. Legal Standard 13

B. GROUND 1: The Combination of Avendano and Visser Does Not Render Obvious Claims 1-2, 5-7, and 25-28 14

1. Petitioner's Combination Does Not Disclose or Render Obvious "forming a filter that describes a relationship for speech between the first physical microphone and the second physical microphone," as Required by All Challenged Claims 14

i. Avendano's Delay Node Does Not Render Obvious the Claimed Filter 15

ii. A POSITA Would Not Make the Avendano/Visser Combination 17

C. GROUND 2: Avendano, Visser, and Bisgaard Do Not Render Obvious Claims 8-16, 23-24 20

D. GROUND 3: Avendano, Visser, Bisgaard, and Hou Do Not Render Obvious Claims 17-19 21

E. GROUND 4: Avendano, Visser, Bisgaard, Hou, and "Frequency Art" Do Not Render Obvious Claims 20-22 21

VII. CONCLUSION.....21

TABLE OF AUTHORITIES

Page(s)

Cases

Apple Inc. v. Samsung Elecs. Co.,
839 F.3d 1034 (Fed. Cir. 2016) 14

Forest Lab'ys, LLC v. Sigmapharm Lab'ys, LLC,
918 F.3d 928 (Fed. Cir. 2019) 14

Graham v. John Deere Co. of Kansas City,
383 U.S. 1 (1966).....13, 14

KSR Int'l Co. v. Telefex Inc.,
550 U.S. 398 (2007).....13

Statutes

35 U.S.C. § 103 13

EXHIBIT LIST

Exhibit No.	Description of Document
2001	Joint Motion to Dismiss, *Jawbone Innovations, LLC v. Apple Inc.,* No. 6:21-cv-00984-ADA, Dkt. 110 (W.D. Tex. Dec. 23, 2022)
2002	Declaration of Akbar M. Sayeed, Ph.D.
2003	CV of Akbar M. Sayeed, Ph.D.

I. INTRODUCTION

On June 27, 2023, Meta Platforms, Inc. ("Meta" or "Petitioner") filed a Petition requesting *inter partes* review of claims 1-2 and 5-28 ("Challenged Claims") of U.S. Patent No. 8,326,611 (the "'611 Patent") (Ex, 1001). Paper 1. The Declaration of Dr. Thomas Kenny (Ex. 1003) accompanied the Petition. On July 13, 2023, the Board issued a Notice of Filing Date Accorded for the Petition and set the time for filing Patent Owner's Preliminary Response. Paper 5.

The Board should deny the Petition because Avendano does not disclose or render obvious the claimed "filter that describes a relationship for speech between the first physical microphone and the second physical microphone" and because a POSITA would not be motivated to make the proposed Visser/Avendano combination.

II. THE '611 PATENT

The '611 Patent discloses and claims methods for acoustic voice activity detection in microphone arrays. The claimed inventions "use microphones to generate virtual directional microphones which have very similar noise responses and very dissimilar speech responses." Furthermore, the "ratio of the energies of the virtual microphones is then calculated over a given window size and the ratio can then be used with a variety of methods to generate a VAD signal. The virtual

microphones can be constructed using either an adaptive or a fixed filter." '611 Patent Abstract.; Ex. 2002, ¶ 28.

Figs. 4 and 3 of the '611 Patent provide illustrative embodiments for creating the virtual microphone signals, V_1 and V_2, respectively, from two omnidirectional physical microphone signals (O_1 and O_2).

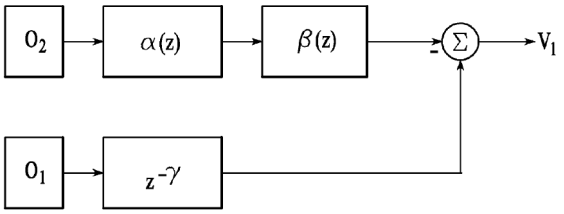

FIG.4

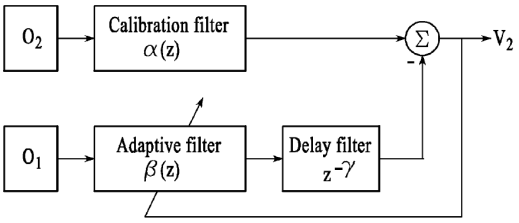

FIG.3

'611 Patent, FIGS. 3, 4; Ex. 2002, ¶ 29.

The '611 Patent explains that "[i]t is assumed that O_1 is closer to the speech source (the user's mouth)" '611 Patent 4:64-65. In the above Figures α(z) and β(z) represent filters, where β(z) can be fixed or adaptive *Id*. 6:17-18. Ex. 2002, ¶ 30.

The relationship of V1 and V2 can be described in the digital frequency domain (z variable) as:

$$V_1(z) = -\beta(z)\alpha(z)O_2(z) + O_1(z)z^{-\gamma}$$

$$V_2(z) = \alpha(z)O_2(z) - \beta(z)O_1(z)z^{-\gamma}$$

'611 Patent 5:23-35. In the above equations (and FIG. 3 and FIG. 4 from Ex 1001), "α(z) is a calibration filter used to compensate O_2's response so that it is the same as O_1, β(z) is a filter that describes the relationship between O_1 and calibrated O_2 for speech, and Y is a fixed delay that depends on the size of the array" *Id*. 5:29-33; Ex. 2002, ¶ 31.

Ideally the microphones O_1 and O_2 are assumed to be calibrated so that "their response to a source located the same distance away was identical for both amplitude and phase." '611 Patent, 28:54-58. However, this is not always feasible in practice and the calibration filter α(z) can be determined using adaptive algorithms, for example, so that in the presence of speech only signals (with no or low levels of noise) the microphone signals O_1 and O_2 satisfy the relationship $O_1(z) = \alpha(z)\, O_2(z)$. *Id.* 28:58-29:27; Ex. 2002, ¶ 32.

After the calibration filter α(z) is determined, the filter β(z) can be determined, either from the geometry of microphones relative to the target speech source or, in the claimed embodiments, by using an adaptive filter algorithm to satisfy the relationship:

$$\tilde{\beta}(z) = \frac{a(z)O_2(z)}{z^{-v}O_1(z)}$$

’611 Patent 6:1-6:11; Ex. 2002, ¶ 33.

The Voice Activity Detection (VAD) is based on computing the ratio R:

$$R = \frac{\|V_1(z)\|}{\|V_2(z)\|} = \sqrt{\frac{\left(-\tilde{\beta}(z)\alpha(z)O_2(z) + O_1(z)z^{-v}\right)^2}{\left(\alpha(z)O_2(z) - \tilde{\beta}(z)O_1(z)z^{-v}\right)^2}}$$

where “double bar indicates norm and again any size window may be used. If $\tilde{\beta}(z)$ has been accurately calculated, the ratio for speech should be relatively high (e.g., greater than approximately 2) and the ratio for noise should be relatively low (e.g., less than approximately 1.1).” *Id.* 6:20-32. If the ratio R is above a threshold, speech is present, otherwise speech is absent. Ex 1001, Fig. 5 (510). “Many techniques known to those skilled in the art (e.g., smoothing, etc.) can be used to make R more amenable to use in generating a VAD and the embodiments herein are not so limited.” *Id.*, 6:38-41; Ex. 2002, ¶ 34.

III. THE RELEVANT ALLEGED PRIOR ART

A. Avendano (U.S. Patent No. 8,194,880)

U.S. Patent No. 8,194,880 (“Avendano”) (Ex. 1005) was filed on January 29, 2007 and issued on June 5, 2012.

Avendano describes “[s]ystems and methods for utilizing inter-microphone level differences (ILD) to attenuate noise and enhance speech.” Avendano, Abstract.

In exemplary embodiments, "primary and secondary acoustic signals are received by omni-directional microphones, and converted into primary and secondary electric signals". *Id.* Further, "[a] differential microphone array module processes the electric signals to determine a cardioid primary signal and a cardioid secondary signal." *Id.* The cardioid signals are "filtered through a frequency analysis module" and "[e]nergy levels of the signals are then computed, and the results are processed by an ILD module using a non-linear combination to obtain the ILD." In exemplary embodiments, "the non-linear combination comprises dividing the energy level associated with the primary microphone by the energy level associated with the secondary microphone. The ILD is utilized by a noise reduction system to enhance the speech of the primary acoustic signal." *Id.* Ex. 2002, ¶ 45.

Fig. 4a in Avendano represents an illustrative embodiment utilized in the Petition and the Declaration of Dr. Kenny.

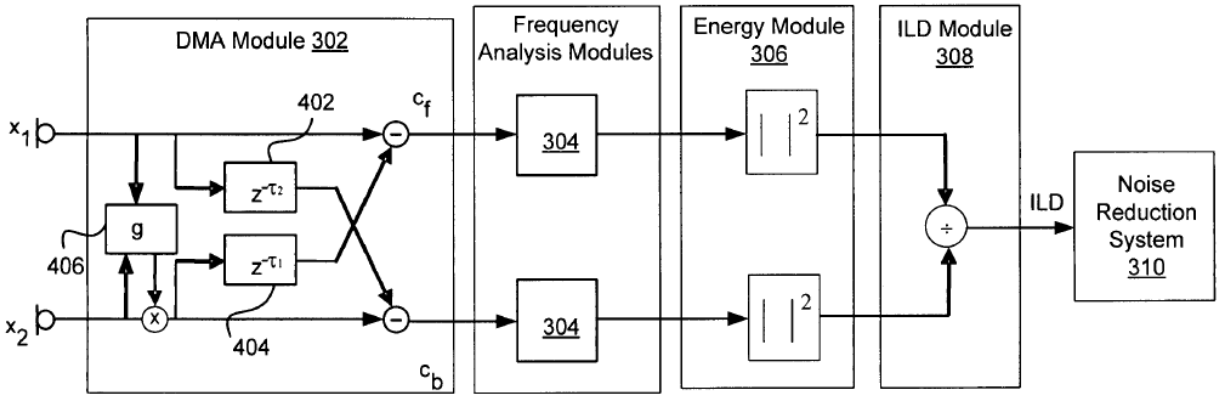

FIG. 4a

Avendano, FIG. 4a; Pet., 10; Ex. 1003, ¶ 60; Ex. 2002, ¶ 46.

Avendano uses two "delay nodes" 402 and 404 to delay the primary and secondary acoustic signals. Avendano, 5:15-24. The gain module 406 computes a gain factor to equalize the signal levels. *Id.*, 5:36-39. The two subtraction units then create cardioid primary (C_f) and cardioid secondary (C_b) signals. *Id.*, 5:25-35; Ex. 2002, ¶ 47.

Following the DMA Module, the signals are processed through a frequency analysis module 304. Avendano, 5:40-48. The frequency analysis module may filter the signals. *Id.* The system then calculates the power estimates associated with each signal, and then uses those estimates to generate the inter-microphone level differences. *Id.*, 6:7-20; Ex. 2002, ¶ 48.

B. Visser (U.S. Patent No. 7,464,029)

U.S. Patent No. 7,464,029 ("Visser") (Ex. 1006) was filed on July 22, 2005 and issued on December 9, 2008. Visser discusses "a signal separation process [that] is associated with a voice activity detector." Visser, Abstract. Notably, "[t]he voice activity detector is a two-channel detector, which enables a particularly robust and accurate detection of voice activity." *Id.* Visser uses Independent Component Analysis (ICA) to separate speech signals from noise sources. Visser, 3:3-20. Visser's method is also described as blind source separation. *Id.* Ex. 2002, ¶ 50.

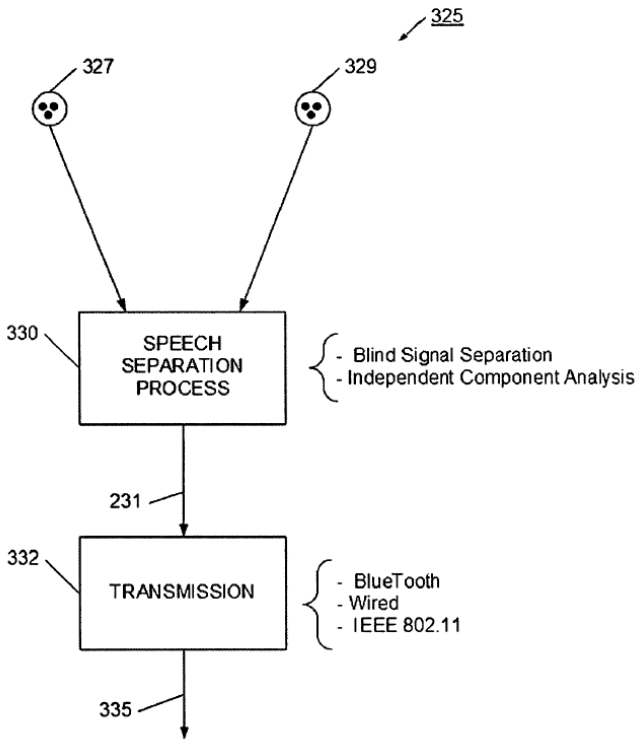

FIG. 5

Visser Fig. 5

Visser includes multiple embodiments. Petitioner relies on a specific separation process which generates two channels: one is noise-dominant and the other is a speech signal. Visser, 16:3-17:67, FIG. 10; *see* Pet., 16-21. While Petitioner mentions a Visser embodiment with a voice activity detector (VAD), it does not rely on the VAD or argue that it would be part of its combination. Pet., 16; Ex. 2002, ¶ 51.

In the relevant embodiment, Visser uses filters w_{21} and w_{12} to separate noise and speech. As shown in Fig. 10 and discussed in Visser's specification, the filter outputs are fed back and combined with the input microphone signals. After repeated

feedback, the desired two output channels are generated. Visser, 16:3-27; Ex. 2002, ¶ 52.

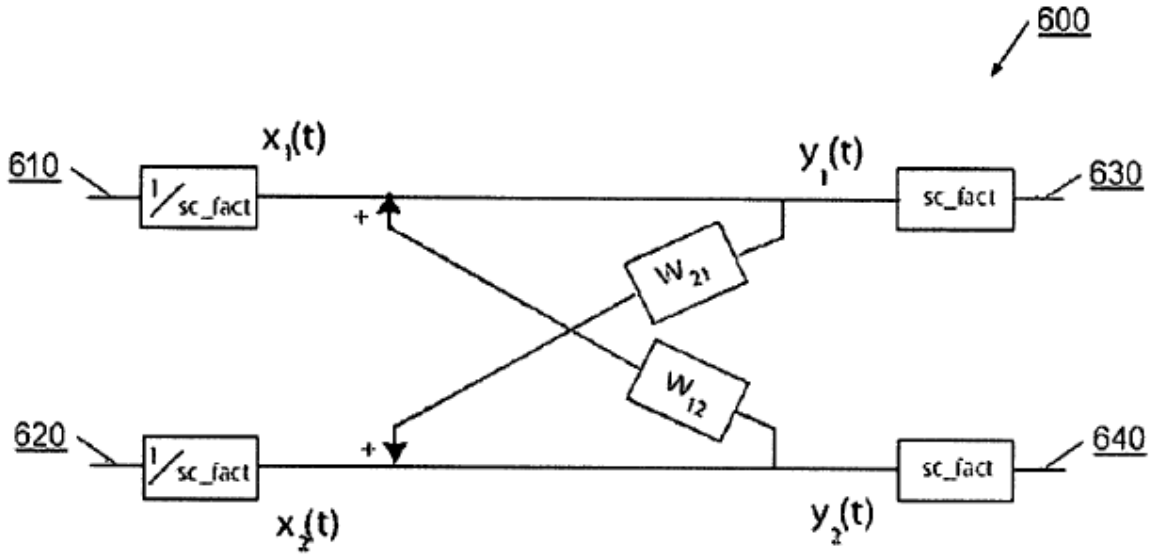

FIG. 10

In Fig. 10, input signals X_1 and X_2 are received from the input channels 610 and 620. Visser, 17:29-50. The infinitive impulse response filters w_{21} and w_{12} are applied to each signal to produce the channels of separated signals. *Id.*; Ex. 2002, ¶ 53.

As Visser explains, the filters are infinitive impulse response filters whose output signals are "fed back into the filter as at least part of an input signal." Visser, 17:51-54. This is in contrast to finite impulse response filters which do not feed back the output signals. *Id.* "In a most simplified form, the cross filters w_{21} and w_{12} are gain factors with only one filter coefficient per filter, for example a delay gain factor

for the time delay between the output signal and the feedback input signal and an amplitude gain factor for amplifying the input signal." *Id.*, 17:56-62; Ex. 2002, ¶ 54.

C. Avendano/Visser Combination

Petitioner asserts that a POSITA would "incorporate Visser's 'ICA process' into Avendano's system to further enhance the differences in speech content in Avendano's two processed signals, such that speech is detected with a greater degree of accuracy, 'even in a changing acoustic environment.'" Pet., 19; Ex. 2002, ¶ 55.

Petitioner then specifies that the only portions of Visser to be incorporated into Avendano are "Visser's 'cross filters w21 and w12.'" Pet. 21-22. Petitioner illustrates its combination with a modified Fig. 4a from Avendano:

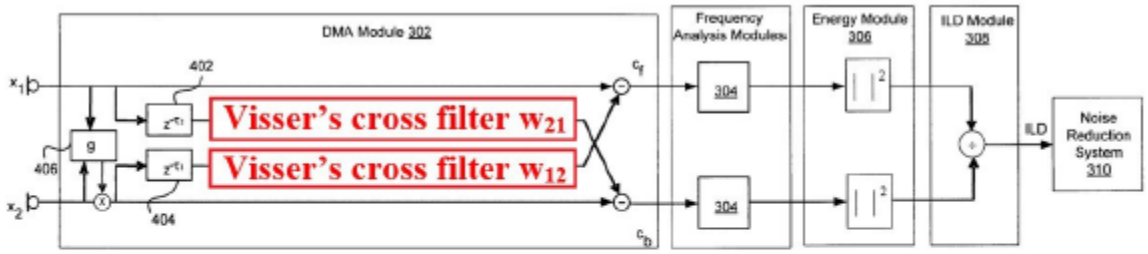

FIG. 4a

Ex. 1005, FIG. 4a (modified)

Pet., 22; Ex. 2002, ¶ 56.

IV. CLAIM CONSTRUCTION

Petitioner asserts that no construction is necessary to resolve the issues in this proceeding. Pet., 7. However, as discussed below, the proper construction of the key

term "filter that describes a relationship for speech between the first physical microphone and the second physical microphone" is required to resolve Petitioner's invalidity arguments.

A. "filter that describes a relationship for speech between the first physical microphone and the second physical microphone"

Jawbone's Construction	Petitioner's Construction
"A filter that alters the magnitude of a signal based on the relative responses to speech of the first and second physical microphones"	No construction necessary.

The term "filter that describes a relationship for speech between the first physical microphone and the second physical microphone" is found in claim 1. Consistent with the intrinsic evidence, the Board should construe the term as "A filter that alters the magnitude of a signal based on the relative responses to speech of the first and second physical microphones." Ex. 2002, ¶ 36.

The specification describes three different filters, a calibration filter ($\alpha(z)$), a delay filter ($z^{-\gamma}$), and the filter that describes a relationship for speech ($\beta(z)$). '611 Patent 5:20-51, Fig. 3, Fig. 4. The delay γ is "a fixed delay that depends on the size of the array." '611 Patent, 5:32-33; Ex., 2002, ¶¶ 37-38.

Fig. 3 illustrates the relationship:

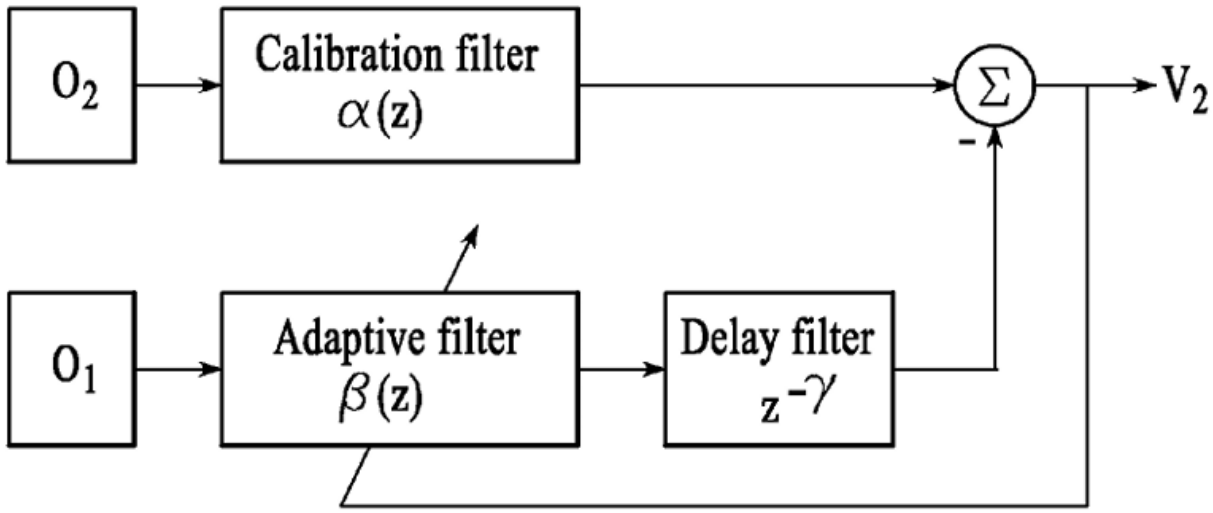

FIG.3

The specification further specifically identifies β(z) as the filter describing the relationship for speech. '611 Patent, 5:31-32 ("β(z) is a filter that describes the relationship between O and calibrated O for speech"). The specification provides two methods to calculate β(z): 1) as a function of the distance between each microphone and the user's mouth ('611 Patent, 5:52-59); and 2) adaptively (*id.*, 6:1-16). Ex. 2002, ¶ 39.

$$\beta(z) = \frac{d_1}{d_2} = \frac{d_1}{d_1 + d} \qquad \tilde{\beta}(z) = \frac{a(z)O_2(z)}{z^{-\nu}O_1(z)}$$

In either case, the β(z) compensates for the difference in response to speech of the two microphones, not the temporal difference. By increasing or decreasing the

magnitude of the filtered signal, the filter adjusts the signal to account for the relative strengths of the signal received—i.e., the closer microphone is attenuated to the same speech level received at the farther microphone. Indeed, the separate delay, which is defined in terms of distance and the speed of sound, compensates for the temporal difference based on the distance between the microphones. '611 Patent, 5:35-45. Ex. 2002, ¶¶ 40-41.

$$\gamma = \frac{d}{c}$$

The constant d is the distance between the two microphones. '611 Patent, 5:43-44; 4:66-67 ("If the microphones and the user's mouth are all on a line, then $d=2d_0$, the distance between the microphones."). The constant c is "the speed of sound in air." *Id.*, 5:43-44; Ex. 2002, ¶ 42.

A POSITA, reading the claim in light of the specification, would therefore understand that the "filter that describes a relationship for speech between the first physical microphone and the second physical microphone" refers to "a filter that alters the magnitude of a signal based on the relative responses to speech of the first and second physical microphones." Ex. 2002, ¶ 43.

Accordingly, the Board should adopt Jawbone's construction.

V. LEVEL OF ORDINARY SKILL IN THE ART

A person of ordinary skill in the art would have a bachelor's degree in computer engineering, computer science, electrical engineering, mechanical engineering, or a similar field, and approximately three years of industry or academic experience in a field related to acoustics, speech recognition, speech detection, or signal processing. Work experience can substitute for formal education and additional formal education can substitute for work experience. Ex. 2002, ¶ 26.

VI. ARGUMENT

A. Legal Standard

The question of obviousness is resolved on the basis of underlying factual determinations, including: (1) the scope and content of the prior art, (2) any differences between the claimed subject matter and the prior art, (3) the level of skill in the art, and (4) where in evidence, so called secondary considerations. *Graham v. John Deere Co. of Kansas City*, 383 U.S. 1, 17–18 (1966). A claim is only unpatentable under 35 U.S.C. § 103 if "the differences between the subject matter sought to be patented and the prior art are such that the subject matter as a whole would have been obvious at the time the invention was made to a person having ordinary skill in the art to which said subject matter pertains." *KSR Int'l Co. v. Telefex Inc.*, 550 U.S. 398, 406 (2007) (quoting 35 U.S.C. § 103).

"An invention is not obvious simply because all of the claimed limitations were known in the prior art at the time of the invention. Instead, we ask 'whether there is a reason, suggestion, or motivation in the prior art that would lead one of ordinary skill in the art to combine the references, and that would also suggest a reasonable likelihood of success.'" *Forest Lab'ys, LLC v. Sigmapharm Lab'ys, LLC*, 918 F.3d 928, 934 (Fed. Cir. 2019). "Of course, concluding that the references are within the scope and content of the prior art to be considered for obviousness does not end the inquiry. *Graham* makes clear that the obviousness inquiry requires a determination whether the claimed invention would have been obvious to a skilled artisan." *Apple Inc. v. Samsung Elecs. Co.*, 839 F.3d 1034, 1050 n.14 (Fed. Cir. 2016).

B. GROUND 1: The Combination of Avendano and Visser Does Not Render Obvious Claims 1-2, 5-7, and 25-28

1. Petitioner's Combination Does Not Disclose or Render Obvious "forming a filter that describes a relationship for speech between the first physical microphone and the second physical microphone," as Required by All Challenged Claims

All Challenged Claims require "forming a filter that describes a relationship for speech between the first physical microphone and the second physical microphone."

i. Avendano's Delay Node Does Not Render Obvious the Claimed Filter

Petitioner first argues that Avendano discloses this limitation via its "delay node 402." Pet. at 25-27. As explained above, under the proper construction, the claim requires forming a filter that alters the magnitude of a signal based on the relative responses to speech of the first and second physical microphones. Avendano's delay node, even if implemented as an all-pass filter, does not meet this requirement. Ex. 2002, ¶¶ 59-65.

Indeed, the only relationship Petitioner identifies is "a temporal relationship for speech between the first and second signals." Pet., 26. Petitioner describes this relationship in nearly identical terms to the '611 Patent's delay filter:

> In Avendano, "due to a space difference between the microphones," and because the speed of sound propagation in air is widely known to be approximately 330 m/s, there will be a "difference in times of arrival of the signal from a speech source to the microphones."

Pet., 26; Ex. 2002, ¶ 60.

Simple mathematics shows that the temporal relationship between the microphones is defined as the distance between them divided by the speed of sound in air. That is exactly the relationship handled by the separate delay filter in the '611 Patent. '611 Patent, 5:35-51. Ex. 2002, ¶ 61.

$$\gamma = \frac{d}{c}$$

The dependent claims to Claim 14 further make clear that a POSITA would not interpret "filter that describes a relationship for speech…" as the delay node. Claim 17 recites "comprising applying a delay to the first intermediate signal." The first intermediate signal, as defined in Claim 14, is the signal to which the filter was applied. A POSITA would know that applying two delays in succession is equivalent to applying a single delay for the sum of those two delays. Thus, a POSITA would realize that the filter cannot be a delay filter; otherwise the claim would simply recite "wherein the filter is a delay filter" or similar language. Ex. 2002, ¶ 62.

Petitioner's contradictory contentions regarding Claim 7 illustrate the point. Rather than show that a POSITA would apply two delays in succession—one would not—Petitioner argues that Avendano's delay node 402 applies the claimed delay. Pet., 37-39. Petitioner's argument ignores the requirement that Claim 7's delay must be applied to the intermediate signal—*i.e.*, the signal that has already been filtered. Ex. 2002, ¶ 63.

In sum, the delay node does not alter the magnitude of the signal passing through it; it merely delays it for a predetermined time. For the reasons stated above, it is therefore not the claimed "filter that describes a relationship for speech between

the first physical microphone and the second physical microphone." Petitioner's obviousness arguments do not obviate this deficiency. Ex. 2002, ¶¶ 64-65.

Accordingly, Avendano does not disclose or render obvious this limitation.

ii. A POSITA Would Not Make the Avendano/Visser Combination

Petitioner secondarily relies on its Avendano/Visser combination for this limitation. Pet., 27-29. However, a POSITA would not make the combination because it would not function for its intended purpose and because Visser teaches away from Petitioner's combination. Ex. 2002, ¶¶ 66-74.

While Petitioner casts its combination as incorporating "Visser's 'ICA or BSS processing function' into Avendano's system, its proposed combination includes only Visser's w_{12} and w_{21} filters. Pet., 18-22, 27 ("Avendano's system would include Visser's cross filters w_{12} and w_{21}…"). Petitioner does not identify any other portion of Visser that would be included. *Id.* Petitioner illustrates its combination with a modified Avendano Fig. 4a:

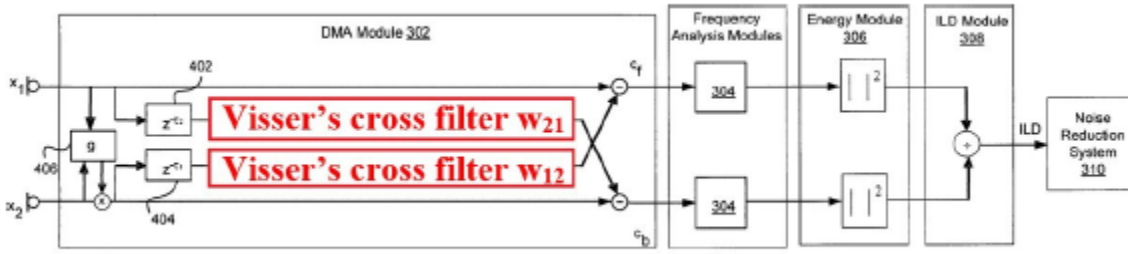

Pet., 28. Petitioner further references Visser Fig. 10 as evidence that the w_{12} and w_{21} describe a relationship for speech. Pet., 29; *see also* Pet., 21.

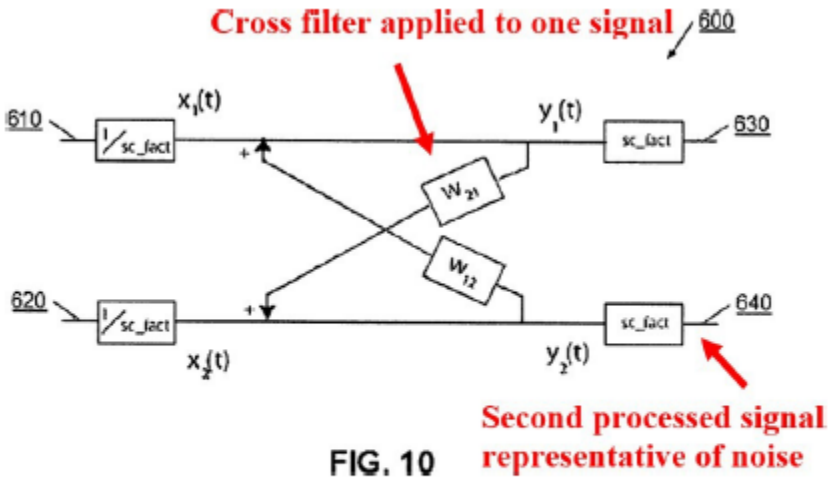

Ex. 1006, FIG. 10

Pet., 21; Ex. 2002, ¶ 68.

Visser teaches that its filters utilize feedback to effectively separate noise and speech. Visser, 17:56-62 (describing Figure 10 and noting "In a most simplified form, the cross filters W_{21} and W_{12} are gain factors with only one filter coefficient per filter, for example a delay gain factor for the time delay between the output signal and the ***feedback input signal*** and an amplitude gain factor for amplifying the input signal" (emphasis added)); *id.* 16:15-19 ("***Following repeated feedback of signals***, two channels of output signals are produced, with one channel dominated with noise so that it consists substantially of noise components, while the other channel contains

a combination of noise and speech." (emphasis added)). Ex. 2002, ¶ 69. Fig. 10 demonstrates the feedback loop:

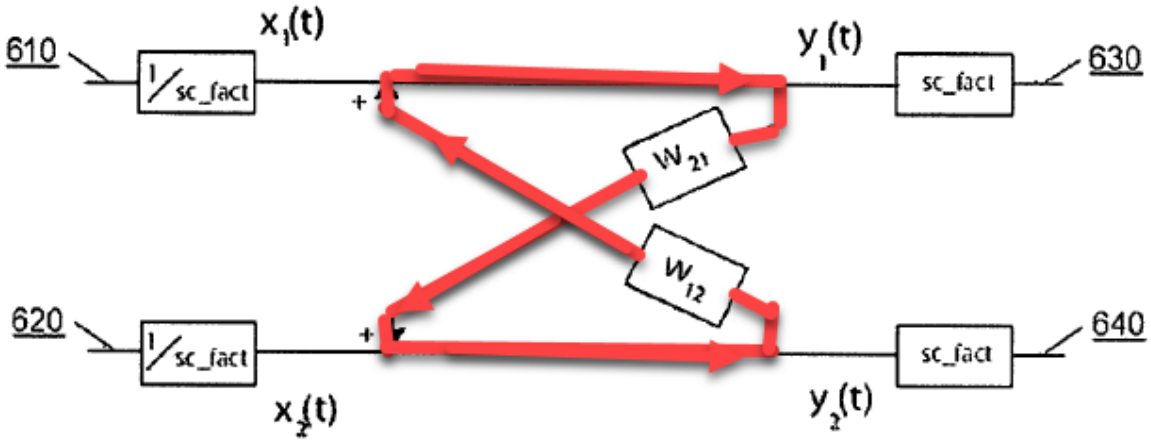

FIG. 10

Visser FIG. 10 (annotated)

As shown above, signals travel through w_{21} to the lower path, then travel through w_{12} back to the upper path and then back through w_{21}. There is no disclosure of any other feedback mechanism in Visser. As discussed above, the feedback is utilized to produce the separated speech and noise channels that Petitioner relies on for its motivation to combine. Visser, 16:15-19; *see* Pet., 18-20 ("a POSITA would have been motivated to incorporate Visser's 'ICA process' into Avendano's system to further enhance the differences in speech content in Avendano's two processed signals, such that speech is detected with a greater degree of accuracy, 'even in a changing acoustic environment.'"). A POSITA would not believe that the filters

would work for their intended purpose without the feedback circuitry. Ex. 2002, ¶¶ 70-73.

While Petitioner strips away Visser's feedback structure, it does not provide any testimony or other evidence that Visser's filters would function for their intended purpose without Visser's feedback. And as discussed above, Visser teaches away from removing the feedback structure. Accordingly, a POSITA would not make Petitioner's proposed combination. Ex. 2002, ¶¶ 73-74.

Petitioner does not put forward any combination that includes the feedback circuitry or any components of Visser other than the filters.

Accordingly, Petitioner has not shown that Claim 1 (and its dependent claims) would have been obvious. The Board should therefore deny the Petition.

C. GROUND 2: Avendano, Visser, and Bisgaard Do Not Render Obvious Claims 8-16, 23-24

Claims 8-16 and 23-24 are all dependent on claim 1. As shown above, Avendano and Visser fail to disclose or render obvious Claim 1. Petitioner does not argue that Bisgaard remedies this deficiency. *See* Pet. at 41-57. Accordingly, Petitioner has not shown that any claim is rendered obvious under Ground 2. Ex. 2002, ¶¶ 75-77.

D. GROUND 3: Avendano, Visser, Bisgaard, and Hou Do Not Render Obvious Claims 17-19

Claims 17-19 are dependent on Claim 1. As shown above, Avendano and Visser fail to disclose or render obvious Claim 1. Petitioner does not argue that Bisgaard or Hou remedies this deficiency. *See* Pet. at 57-70. Accordingly, Petitioner has not shown that any claim is rendered obvious under Ground 3. Ex. 2002, ¶¶ 78-80.

E. GROUND 4: Avendano, Visser, Bisgaard, Hou, and "Frequency Art" Do Not Render Obvious Claims 20-22

Claims 20-22 are dependent on Claim 1. As shown above, Avendano and Visser fail to disclose or render obvious Claim 1. Petitioner does not argue that Bisgaard, Hou, or the "Frequency Art" remedies this deficiency. *See* Pet. at 70-88. Accordingly, Petitioner has not shown that any claim is rendered obvious under Ground 4. Ex. 2002, ¶¶ 81-83.

VII. CONCLUSION

As discussed above, Petitioner's combinations fail to disclose key limitations of each claim of the '611 Patent and, therefore, do not anticipate or render obvious any claims.

Respectfully submitted,

Dated: October 13, 2023 By: /*Peter Lambrianakos* /
Peter Lambrianakos (Reg. No. 58,279)
Lead Counsel for Patent Owner
FABRICANT LLP

411 Theodore Fremd Avenue,
Suite 206 South
Rye, New York 10580
Tel. 212-257-5797
Fax. 212-257-5796
Email: plambrianakos@fabricantllp.com

CERTIFICATE OF WORD COUNT

The undersigned hereby certifies that the portions of the above-captioned JAWBONE INNOVATIONS, LLC'S PRELIMINARY RESPONSE specified in 37 C.F.R. § 42.24 has 3,557 words in compliance with the 14,000 word limit set forth in 37 C.F.R. § 42.24. This word count was prepared using Microsoft Word for Office 365.

Respectfully submitted,

October 13, 2023 By: */Peter Lambrianakos /*

Peter Lambrianakos (Reg. No. 58,279)
Lead Counsel for Patent Owner
FABRICANT LLP
411 Theodore Fremd Avenue,
Suite 206 South
Rye, New York 10580
Tel. 212-257-5797
Fax. 212-257-5796
Email: plambrianakos@fabricantllp.com

CERTIFICATE OF SERVICE

A copy of the foregoing Patent Owner's Preliminary Response and Exhibits 2002 and 2003 have been served on Petitioner's counsel of record as follows:

Lisa Nguyen
Email: lisa.nguyen@allenovery.com
Email: AO_Meta_Jawbone@allenovery.com
Eric Lancaster (*Pro Hac Vice* to be filed)
Email: eric.lancaster@allenovery.com
ALLEN & OVERY LLP
550 High Street
Palo Alto, California 94301

David Tennant
Email: david.tennant@allenovery.com
Alan Billharz
Email: alan.billharz@allenovery.com
Colby Davis
Email: Colby.davis@allenovery.com
ALLEN & OVERY LLP
1101 New York Avenue NW
Washington, D.C. 20005

Daniel Margolis (*Pro Hac Vice* to be filed)
Email: daniel.margolis@allenovery.com
Grace Wang
Email: grace.wang@allenovery.com
ALLEN & OVERY LLP
1221 Sixth Avenue
New York, New York 10020

Attorneys for Meta Platforms, Inc.

October 13, 2023 By: /*Peter Lambrianakos* /
Peter Lambrianakos (Reg. No. 58,279)
Lead Counsel for Patent Owner

FABRICANT LLP
411 Theodore Fremd Avenue,
Suite 206 South
Rye, New York 10580
Tel. 212-257-5797
Fax. 212-257-5796