UNITED STATES PATENT AND TRADEMARK OFFICE

BEFORE THE PATENT TRIAL AND APPEAL BOARD

META PLATFORMS, INC.,

Petitioner,

v.

JAWBONE INNOVATIONS, LLC,

Patent Owner.

Patent No. 8,326,611
Filing Date: October 26, 2009
Issue Date: December 4, 2012

Inventor: Nicolas Petit, Gregory Burnett, and Zhinian Jing
Title: ACOUSTIC VOICE ACTIVITY DETECTION (AVAD) FOR ELECTRONIC SYSTEMS

PATENT OWNER'S SUR-REPLY

Case No. IPR2023-01128

TABLE OF CONTENTS

Page(s)

I. INTRODUCTION 1

II. CLAIM CONSTRUCTION 2

A. The claimed β filter is not a "simple delay".....2

B. The '611 Patent disavows using a delay filter as the relationship filter 2

C. The Proposed construction is well-supported in the record.....5

III. GROUND 1: THE COMBINATION OF AVENDANO AND VISSER DOES NOT RENDER OBVIOUS CLAIMS 1-7, 25-28.....7

A. Avendano's Delay Node does not render the relationship filter obvious 7

B. A POSITA Would Not Make the Avendano/Vissser Combination 7

C. The Combination Does Not Render Obvious "Applying a Delay to the First Intermediate Signa" (Dependent Claim 7).....11

IV. GROUND 2: PETITIONER'S COMBINATION DOES NOT RENDER OBVIOUS CLAIM 9 13

V. GROUND 3-4: NO CLAIMS ARE RENDERED OBVIOUS UNDER GROUNDS 3 AND 4.....15

VI. CONCLUSION.....16

TABLE OF AUTHORITIES

Page(s)

Cases

Corephotonics, Ltd. v. Apple Inc.,
84 F.4th 990 (Fed. Cir. 2023) 9

TomTom, Inc. v. Adolph,
790 F.3d 1315 (Fed. Cir. 2015) 14

EXHIBIT LIST

Exhibit No.	Description of Document
2001	Joint Motion to Dismiss, *Jawbone Innovations, LLC v. Apple Inc.,* No. 6:21-cv-00984-ADA, Dkt. 110 (W.D. Tex. Dec. 23, 2022)
2002	Declaration of Akbar M. Sayeed, Ph.D.
2003	CV of Akbar M. Sayeed, Ph.D.
2004	Transcript of the Deposition of Thomas W. Kenny, Ph.D., taken April 19, 2024
2005	Second Declaration of Akbar M. Sayeed, Ph.D.

I. INTRODUCTION

The POR set out numerous deficiencies with Petitioner's hindsight-based combination based on the Petition's own language, the cross-examination testimony of Petitioner's expert, and the testimony of Jawbone's expert. In Reply, Petitioner provides no new testimony and instead simply sets out attorney argument and new, unsupported, combinations. But even the new combinations, even more clearly the product of hindsight, do not remedy the flaws of the Petition.

For example, Petitioner, tacitly admitting that Visser's cross-filters require a VAD to adapt properly, now argues that those cross-filters would be controlled by "Avendano's VAD"—the output of the exact combination the cross-filters are imported into. Petitioner provides no evidentiary support that a POSITA would make the combination in such a way, nor that the resulting new combination would avoid the same problems.

In an attempt to repair its arguments as to dependent Claims 7 and 9, Petitioner asks the Board to ignore Petitioner's own mapping of the first intermediate signal as well as controlling claim construction and written description law.

The Board should therefore issue a Final Written Decision finding all challenged claims not unpatentable.

II. CLAIM CONSTRUCTION

A. The claimed β filter is not a "simple delay"

The β filter is not a "simple delay." Petitioner's contrary argument is solely attorney argument, unsupported by any evidence or expert testimony. Reply, 4-5. Indeed, Petitioner's lack of expert support leads to it using two incompatible equations.

Petitioner's argument is flawed from the beginning. The first equation: $O_1(z) = a(z)O_2(z)$ is valid only "in the presence of speech only signals (with no or low levels of noise)." Ex. 2005, ¶ 35; Reply, 4-5. *See also* '611 Patent, 29:3-10 (defining calibration filter in reference to "a known calibration source.") In other words, the *a* filter is a calibration filter determined under controlled conditions. The second equation, however, is for a signal containing both noise and speech. Ex. 2005, ¶ 36. The $O_1(z)$ in the first equation is thus not equal to the $O_1(z)$ in the second equation, and cannot be substituted.

Accordingly, the Board should disregard Meta's unsupported and incorrect attorney argument.

B. The '611 Patent disavows using a delay filter as the relationship filter

As the POR explains (supported with Dr. Sayeed's expert testimony), the '611 Patent: i) describes its key advance and advantage over the prior art as avoiding the use of "time/phase difference of each microphone" to remove noise; ii) specifically

identifies the β filter (and only the β filter) as the "filter that describes the relationship between O_1 and calibrated O_2 for speech"; iii) uses the β filter (and only the β filter) as the relationship filter in ***every*** embodiment; and iv) spends numerous columns on describing how to calculate the β filter. POR, 13-22.

Against this array of intrinsic evidence, Petitioner quibbles with the below passage:

> The NAVSAD and PSAD systems include an array algorithm for speech detection that uses the difference in frequency content between two microphones to calculate a relationship between the signals of the two microphones. This is in contrast to conventional arrays that attempt to use the time/phase difference of each microphone to remove the noise outside of an "area of sensitivity". The methods described herein provide a significant advantage, as they do not require a specific orientation of the array with respect to the signal.

'611 Patent, 11:18-27; Reply, 6-9.

Petitioner's argument seems to be that since the above passage does not use the word "filter," it is completely ambiguous and cannot disavow anything. Reply, 6-9. Thus, Petitioner argues, the statement that the invention "uses the difference in frequency content between two microphones to calculate a ***relationship between the signals of the two microphones***" has no bearing on the claim term "filter that describes a ***relationship for speech between the first physical microphone and the***

second physical microphone." Reply, 7. By the same token, Petitioner says, the avoidance of using time/phase difference to remove noise has no impact on "delay filter."

These arguments cannot stand up to scrutiny. The thrust of the invention is using filters to remove noise to provide a clear voice detection signal. POR, 1-5; '611 Patent, 3:57-4:3. No other method is described to remove noise. It is undisputed that time/phase difference is equivalent to delay. Ex. 2005, ¶¶ 42-43, Ex. 2004, 36:12-37:1 (explaining that a delay filter applying zero delay results in no phase shift). To avoid removing noise based on time/phase difference is thus to avoid using a delay filter to remove noise.

Similarly, the passage's description of the "relationship" between two microphone signals is a clear reference to the claimed filter that "describes a relationship for speech . . . between" two microphones. POR, 15-18; Ex. 2005, ¶¶ 42-43, 46-48. Petitioner's argument that the passage, which explains that the difference over the prior art is calculating the relationship between the two microphones by differences in content instead of time/phase, is ambiguous as to the exact term that refers to that same relationship, is disingenuous at best.

Moreover, even if the lack of the word "filter" were enough to render the passage, standing alone, ambiguous, the remainder of the specification removes any

ambiguity and leaves no doubt that the claimed filter is not a delay filter. POR, 15-22. Petitioner does not respond to the POR's detailed explanation.

Petitioner argues that "that every embodiment also uses other filters (the delay and α filters) that also meet the claimed 'filter.'" Reply, 9. But neither the delay filter nor the calibration filter is ever "use[d]" or described as the filter that describes the relationship for speech. POR, 15-19 (citing Ex. 2005, ¶¶ 45-56). In every embodiment, the β filter alone is described as the relationship filter. *Id.* As Dr. Sayeed explained, a POSITA, reading the specification as a whole, would understand the relationship to be the β filter, and not the delay or calibration filters. Ex. 2005, ¶ 54. Petitioner provides no contrary evidence in rebuttal.

C. The Proposed construction is well-supported in the record

The POR set forth in detail the support for Jawbone's construction. POR, 15-22. Petitioner's arguments otherwise lack merit, and, further, are unsupported by any expert testimony or other evidence.

Petitioner first argues that the construction is unsupported because "temporal" and "non-temporal" do not appear in the specification. There is no requirement that the specific words of a construction must be pulled verbatim from the specification. Dr. Sayeed explained that non-temporal, in accordance with its usual definition, means not based on time and thus delay. Ex. 2005, ¶¶ 48-51. Petitioner provides no contrary evidence. Similarly, Petitioner complains that "relative responses" does not

appear either. Petitioner does not even attempt to show that the substance of the construction is wrong or somehow not intelligible. Reply, 13. The term "response" is used pervasively throughout the specification including in the Abstract. '611 Patent, Abstract; *see also*, *e.g.*, *id.*, 3:7-61 (using "response" 14 times). It is thus unclear what Petitioner's complaint about "relative responses" constitutes.

Petitioner's redundancy arguments are even less coherent. Reply, 14. The construction defines the filter; it does not add new steps or limitations. Thus, Petitioner's complaints that signals are separately recited or that applying the filter means altering a signal are unfounded.

Finally, Petitioner misunderstands claim interpretation to argue that the construction would somehow make the independent claim narrower than the dependent claims that recite additional delays or calibrations. Reply, 14-15. But as explained in the POR, the use of "comprising" allows for additional filters (such as delay and calibration) in addition to the relationship filter. POR, 19-20.

The intrinsic evidence compels Jawbone's construction. Dr. Sayeed's testimony confirms that a POSITA would interpret the term that same way. The Board should reject Petitioner's legally incorrect and unsupported arguments and adopt Jawbone's construction.

III. GROUND 1: THE COMBINATION OF AVENDANO AND VISSER DOES NOT RENDER OBVIOUS CLAIMS 1-7, 25-28

A. Avendano's Delay Node does not render the relationship filter obvious

The parties agree that Avendano does not render this limitation obvious under the proper construction. Reply, 15-16; POR, 24-26.

B. A POSITA Would Not Make the Avendano/Vissser Combination

As explained in the POR, and confirmed by Petitioner's expert, the proposed combination does not include Visser's VAD. Ex. 2004, 60:17-19 ("I don't believe I explicitly rely on the VAD in Visser to meet the limitations where that's required."); *see also id.*, 59:5-63:6. This is only logical, as the '611 Patent's invention, which Petitioner attempts to reconstruct from Visser and Avendano, is itself a VAD. *E.g.*, '611 Patent, Abstract ("Acoustic Voice Activity Detection (AVAD) methods and systems are described."). Petitioner provided no explanation, and indeed, can provide no explanation, as to why a POSITA would incorporate a separate VAD within Avendano's VAD.

In Reply, Petitioner argues that it "referenced Visser's VAD." Reply, 16. Petitioner further states that it referred back to its general description of the combination in its discussion of element 14[e]. *Id.* But Petitioner only "referenced" Visser's VAD to describe Visser as analogous art to Avendano. Pet., 15-16. *See generally* Pet., 15-21. Indeed, Petitioner, consistent with its expert's testimony,

specifically identified the "cross-filters" as the components added from Visser into Avendano. Pet., 19-21. Moreover, the "cross-filters" are the only components from Visser for which Petitioner attempted to show a "reasonable expectation of success." Pet., 20-21.

Petitioner mischaracterizes Dr. Kenny's testimony as somehow incorporating Visser's VAD. Reply, 17-18. But the testimony on which Petitioner relies contradicts its description. For example, Dr. Kenny testified that "the components of Visser that I rely upon for my opinions are associated with Figure 10 and the structures within Figure 10, and the description of what goes on inside of the cross filters and components around them." Ex. 2004, 59:13-61:4. Figure 10 does not include the VAD:

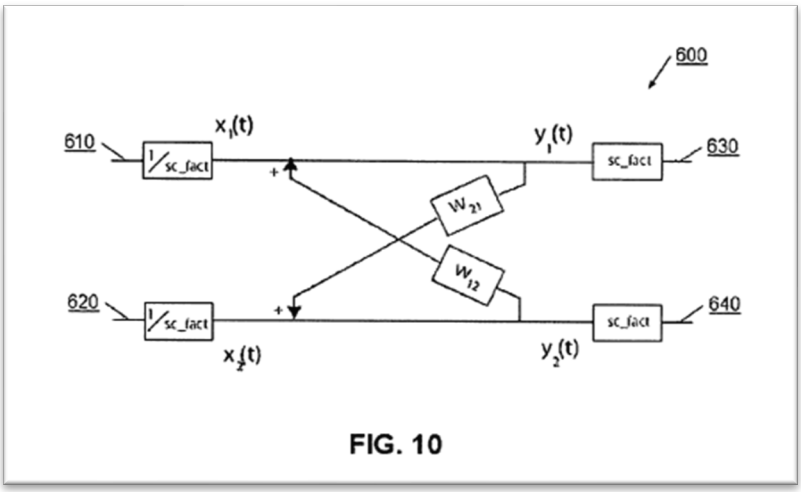

Ex. 1006, FIG. 10. The VAD is not within or associated with Figure 10.

Indeed, as Dr. Kenny specifically testified:

> Q. So the combination you're proposing is Avendano with those cross filters added as you described several times now; is that about right?
>
> THE WITNESS: Yeah, the combination that I'm referring to when discussing the Avendano plus Visser combo is the ***majority of the Avendano system with cross filters as taught by Visser as a component to be added into that system*** or the details of how it's added, there's some options in variability, including architecting as a infinite impulse response or a finite impulse response filter at least, maybe more.

Ex. 2004, 62:14-63:6 (objection omitted and emphasis added).

Visser's VAD was never part of the combination, and the Board should decline to consider it now. *Corephotonics, Ltd. v. Apple Inc.*, 84 F.4th 990, 1002 (Fed. Cir. 2023) ("Given these strict requirements, the Board is not permitted to entertain shifting arguments but must, instead, reject any entirely new theory of *prima facie* obviousness absent from the petition, if the petitioner attempts to inject such a theory into the proceeding post-petition." (internal citations, alterations, and quotation marks omitted)).

Petitioner does not dispute that, in the absence of a VAD to control the adaptation, the Avendano/Visser combination would not function. Instead, Petitioner now makes the new argument that Avendano's VAD controls the

adaptation of Visser's filters in the combination. Reply, 18. No such proposal was described in the Petition. *See, e.g.,* Pet., 20-21. To the extent the Board considers this new combination, a POSITA would not make it. In essence, Petitioner now proposes a VAD (Avendano/Visser combination) that controls its interior components (the cross-filters) based on the output of those components (the VAD/ILD signal). Reply, 18.

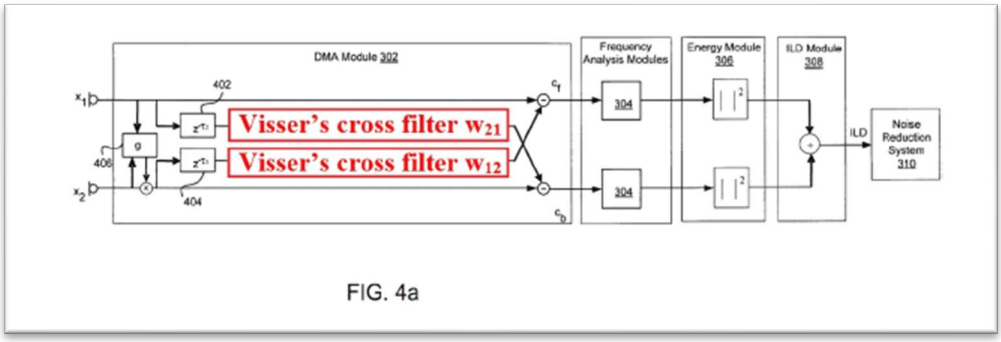

FIG. 4a

Pet., 22. Petitioner provides no evidence that a POSITA would make this combination, relying solely on attorney argument for motivation and to suggest that it would function. Reply, 18 (citing no expert testimony or other evidence). The Board should disregard Petitioner's unsupported theory.

Even if the Board were to consider the revised combination, Petitioner makes no showing that it would resolve the issues outlined in the POR. The POR explained that using Visser's filters without Visser's VAD will result in the C_b cardioid signal including more content from the X_1 microphone than an unmodified Avendano. POR, 29; Ex. 2005, ¶¶ 92-96. Petitioner does not dispute these results. Reply, 18.

Without the independent VAD disclosed in Visser, the revised combination will suffer from the same problem. That is, the VAD/ILD signal output from Avendano will be unreliable from the beginning, resulting in unpredictable adaptation and reducing its own accuracy. *See* POR, 29; Ex. 2005, ¶¶ 92-96.

Finally, as the deficiencies above demonstrate, Petitioner's combination is the result of clear hindsight. POR, 29-30. Petitioner's only response is to assert that the Petition and Dr. Kenny's testimony are based on the knowledge of a POSITA at the time of the invention. Reply, 18-19. Merely stating so does not insulate Petitioner from hindsight, and Petitioner's defective combination, along with its shifting explanations, demonstrates hindsight.

C. The Combination Does Not Render Obvious "Applying a Delay to the First Intermediate Signa" (Dependent Claim 7)

Petitioner's combination fails to render this claim obvious because it does not apply a delay to the first intermediate signal. Rather, it applies the delay to the first microphone signal as shown below.

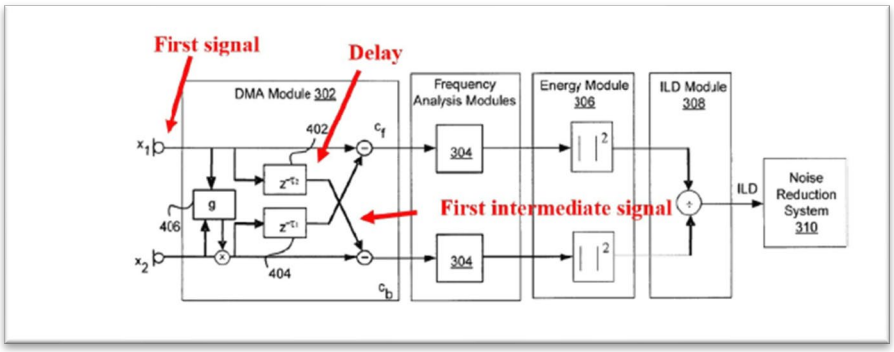

Pet., 38.

Petitioner wildly misunderstands the claims by stating that independent Claims 14 and 42 require a delayed first signal to be summed with the second signal.[1] Reply, 19-20. To the contrary, Claim 14 requires summing the ***first intermediate signal***[2] with the second signal. '611 Patent, Claim. 14. No delay is required by Claim 14 or 42. Petitioner further argues that interpreting the claims by their plain language results in a lack of written description. Reply, 19-20. Petitioner is mistaken. While written description is not relevant in an IPR, Claims 14 and 42 are described in multiple figures and throughout the specification, none of which require a delay applied to the intermediate signal prior to summing it with the second signal. '611 Patent, FIG. 5, 6:60-7:8 (describing FIG. 5), 30:25-37, 31:51-63, 32:37-33:2, 33:38-53, 34:67-35:17.

Petitioner's arguments as to the Avendano/Visser combination fare no better. Petitioner's identified delay is applied to the "first signal" not the "first intermediate signal" as shown by Petitioner's own figure.

[1] Petitioner's argument essentially requires the Board to construe "first intermediate signal."
[2] The output of the relationship filter.

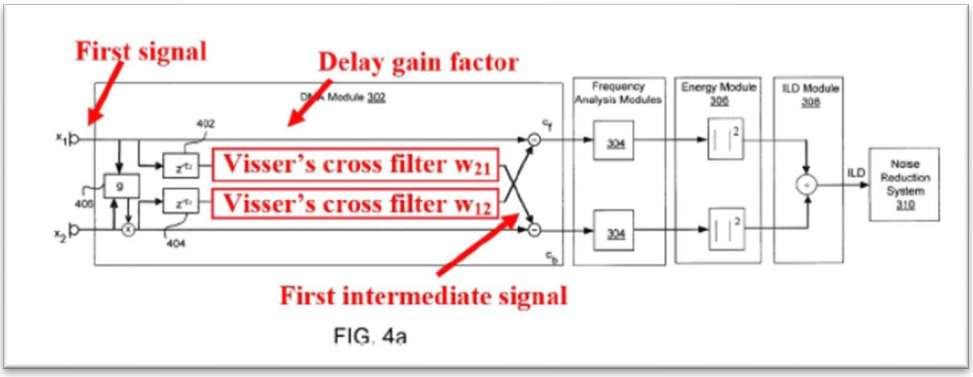

FIG. 4a

Pet., 39.

Petitioner argues that "Visser's cross-filter applies both the claimed 'filter' and the claimed 'delay.'" Reply, 21. But Petitioner itself labeled the first intermediate signal as output from Visser's cross filter w_{21}. And that signal is not delayed in Petitioner's combination.

Accordingly, Claim 7 and its dependent claims are not obvious. POR, 30-32.

IV. GROUND 2: PETITIONER'S COMBINATION DOES NOT RENDER OBVIOUS CLAIM 9

The POR explained that Claim 9 requires "wherein the forming of the first virtual microphone comprises applying the filter to the second signal," and that in Petitioner's combination "the filter" is w_{21}. Meanwhile, a different filter w_{12} is applied to the second signal. POR, 34-36.

Petitioner argues that "the filter" must be interpreted or construed as "an overall system applying different component filters to the individual signals." Reply,

22-23. This flies in the face of the patent itself as well as basic claim construction law.

It is well-settled that when a claim term first appears with an indefinite article such as "a filter" and later appears with a definite article, such as "the filter," the first usage serves as an antecedent basis for the later usages. *E.g.*, *TomTom, Inc. v. Adolph*, 790 F.3d 1315, 1329 (Fed. Cir. 2015) ("'*The* storage device' can only refer to one thing: the 'at least one storage device' found in the first limitation of claim 1."). The same analysis applies here, the only "filter" recited in Claim 9 (read in combination with its parent claims) is found in the "forming a filter" limitation. Thus, the references to "the filter" in Claim 9 (and in Claim 1) all apply to the same filter.

Petitioner nonsensically argues that the above interpretation would read out every embodiment in the patent because "different component filters are applied to the two microphone signals." Reply, 22. Not so. First, as a "comprising" claim, Claim 19 allows for other filters, such as the calibration filter, to be applied to the microphone signal in addition to "the filter."[3] Second, multiple embodiments show exactly what is claimed. For example, FIG. 4 shows the β(z) filter applied to the second microphone signal O_2 as part of forming the first virtual microphone V_1.

[3] *See also* Claim 20, which adds the limitation "applying the calibration to the second signal."

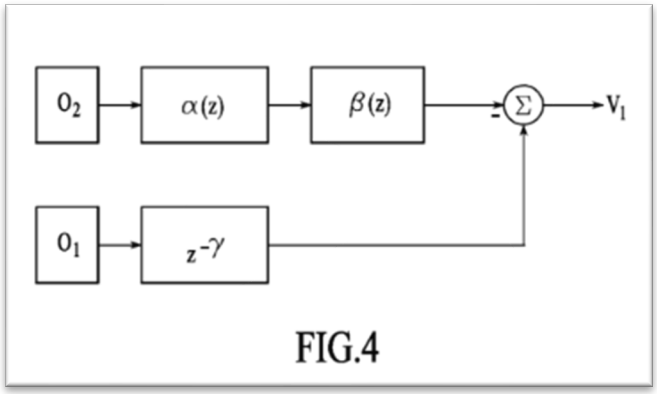

FIG.4

'611 Patent, FIG. 4. FIG. 3 shows the same β(z) filter used in forming the second virtual microphone, as claimed in Claim 1. The corresponding text explains that the same filter is used for both V_1 and V_2. *Id.*, 6:1-19.

Finally, Petitioner makes the tortured argument that w_{12} operates on both microphone signals. But w_{12} is not "the filter" in Petitioner's mapping—w_{21} is. POR, 35; Pet., 33 ("the first intermediate signal is an output of 'cross filter w21,' which is generated by ***applying 'cross filter w21' to a first signal x1.***" (emphasis added)). Petitioner's new argument, bereft of evidence, should be disregarded.

Accordingly, Claim 9 and its dependent claims are not rendered obvious. POR

V. GROUND 3-4: NO CLAIMS ARE RENDERED OBVIOUS UNDER GROUNDS 3 AND 4

The parties agree that the arguments as to Grounds 1 and 2 resolve Grounds 3 and 4. Reply, 24.

VI. CONCLUSION

For the foregoing reasons, Patent Owner respectfully requests that the Board issue a Final Written Decision confirming patentability of the Challenged Claims.

Respectfully submitted,

Dated: September 9, 2024 By: /*Peter Lambrianakos* /

Peter Lambrianakos (Reg. No. 58,279)
Lead Counsel for Patent Owner
FABRICANT LLP
411 Theodore Fremd Avenue,
Suite 206 South
Rye, New York 10580
Tel. 212-257-5797
Fax. 212-257-5796
Email: plambrianakos@fabricantllp.com

CERTIFICATE OF WORD COUNT

The undersigned hereby certifies that the portions of the above-captioned PATENT OWNER'S SUR-REPLY specified in 37 C.F.R. § 42.24 has 2,905 words in compliance with the 5,600 word limit set forth in 37 C.F.R. § 42.24. This word count was prepared using Microsoft Word for Office 365.

Respectfully submitted,

September 9, 2024 By: */Peter Lambrianakos /*

Peter Lambrianakos (Reg. No. 58,279)
Lead Counsel for Patent Owner
FABRICANT LLP
411 Theodore Fremd Avenue,
Suite 206 South
Rye, New York 10580
Tel. 212-257-5797
Fax. 212-257-5796
Email: plambrianakos@fabricantllp.com

CERTIFICATE OF SERVICE

A copy of the foregoing Patent Owner's Sur-Reply has been served on Petitioner's counsel of record as follows:

Grace I. Wang
Email: PH-Meta-Jawbone-IPR@paulhastings.com
PAUL HASTINGS LLP
200 Park Avenue
New York, New York 10166

Lisa K. Nguyen
Eric E. Lancaster (*Pro Hac Vice* to be filed)
Email: PH-Meta-Jawbone-IPR@paulhastings.com
PAUL HASTINGS LLP
1117 South California Avenue
Palo Alto, California 94303

David M. Tennant
Alan M. Billharz
Email: PH-Meta-Jawbone-IPR@paulhastings.com
PAUL HASTINGS LLP
2050 M Street, N.W.
Washington, D.C. 20036

Attorneys for Meta Platforms, Inc.

September 9, 2024 By: /*Peter Lambrianakos* /

Peter Lambrianakos (Reg. No. 58,279)
Lead Counsel for Patent Owner
FABRICANT LLP
411 Theodore Fremd Avenue,
Suite 206 South
Rye, New York 10580
Tel. 212-257-5797
Fax. 212-257-5796