Attorney Docket No. ALPH.P039 Patent

Transmittal of Documents

Certification Under 37 C F R §1 8(a)

October 26, 2009
Date of Transmission

Transmitted via

USPTO EFS

I hereby certify that this document, and any other accompanying documents referred to herein are being transmitted to the United States Patent Office via EFS in accordance with 37 C.F.R. §1.6(a)(4) on the date indicated above.

Jerry Donnard
(Print Name of Person Transmitting Documents)

(Signature of Person Transmitting Documents)

Application Data Sheet;
Nonprovisional Patent Application;
Drawings; and
Electronic payment of filing fees.

PATENT APPLICATION

FOR

ACOUSTIC VOICE ACTIVITY DETECTION (AVAD) FOR ELECTRONIC SYSTEMS

Inventors:
Nicolas Petit
Gregory Burnett
Zhinian Jing

RELATED APPLICATIONS

This application claims the benefit of United States (US) Patent Application number 61/108,426, filed October 24, 2008.

This application is a continuation in part of US Patent Application number 11/805,987, filed May 25, 2007.

This application is a continuation in part of US Patent Application number 12/139,333, filed June 13, 2008.

TECHNICAL FIELD

The disclosure herein relates generally to noise suppression. In particular, this disclosure relates to noise suppression systems, devices, and methods for use in acoustic applications.

BACKGROUND

The ability to correctly identify voiced and unvoiced speech is critical to many speech applications including speech recognition, speaker verification, noise suppression, and many others. In a typical acoustic application, speech from a human speaker is captured and transmitted to a receiver in a different location. In the speaker's environment there may exist one or more noise sources that pollute the speech signal, the signal of interest, with unwanted acoustic noise. This makes it difficult or impossible for the receiver, whether human or machine, to understand the user's speech.

Typical methods for classifying voiced and unvoiced speech have relied mainly on the acoustic content of single microphone data, which is plagued by problems with noise and the corresponding uncertainties in signal content. This is especially problematic with the proliferation of portable communication devices like mobile telephones. There are methods known in the art for suppressing the noise present in the speech signals, but these normally require a robust method of

determining when speech is being produced. Non-acoustic methods have been employed successfully in commercial products such as the Jawbone headset produced by Aliphcom, Inc., San Francisco, California (Aliph), but an acoustic-only solution is desired in some cases (e.g., for reduced cost, as a supplement to the non-acoustic sensor, etc.).

INCORPORATION BY REFERENCE

Each patent, patent application, and/or publication mentioned in this specification is herein incorporated by reference in its entirety to the same extent as if each individual patent, patent application, and/or publication was specifically and individually indicated to be incorporated by reference.

BRIEF DESCRIPTION OF THE DRAWINGS

Figure 1 is a configuration of a two-microphone array with speech source S, under an embodiment.

Figure 2 is a block diagram of V_2 construction using a fixed $\beta(z)$, under an embodiment.

Figure 3 is a block diagram of V_2 construction using an adaptive $\beta(z)$, under an embodiment.

Figure 4 is a block diagram of V_1 construction, under an embodiment.

Figure 5 is a flow diagram of acoustic voice activity detection, under an embodiment.

Figure 6 shows experimental results of the algorithm using a fixed beta when only noise is present, under an embodiment.

Figure 7 shows experimental results of the algorithm using a fixed beta when only speech is present, under an embodiment.

Figure 8 shows experimental results of the algorithm using a fixed beta when speech and noise is present, under an embodiment.

Figure 9 shows experimental results of the algorithm using an adaptive beta when only noise is present, under an embodiment.

Figure 10 shows experimental results of the algorithm using an adaptive beta when only speech is present, under an embodiment.

Figure 11 shows experimental results of the algorithm using an adaptive beta when speech and noise is present, under an embodiment.

Figure 12 is a block diagram of a NAVSAD system, under an embodiment.

Figure 13 is a block diagram of a PSAD system, under an embodiment.

Figure 14 is a block diagram of a denoising subsystem, referred to herein as the Pathfinder system, under an embodiment.

Figure 15 is a flow diagram of a detection algorithm for use in detecting voiced and unvoiced speech, under an embodiment.

Figures 16A, 16B, and 17 show data plots for an example in which a subject twice speaks the phrase "pop pan", under an embodiment.

Figure 16A plots the received GEMS signal for this utterance along with the mean correlation between the GEMS signal and the Mic 1 signal and the threshold T1 used for voiced speech detection, under an embodiment.

Figure 16B plots the received GEMS signal for this utterance along with the standard deviation of the GEMS signal and the threshold T2 used for voiced speech detection, under an embodiment.

Figure 17 plots voiced speech detected from the acoustic or audio signal, along with the GEMS signal and the acoustic noise; no unvoiced speech is detected in this example because of the heavy background babble noise, under an embodiment.

Figure 18 is a microphone array for use under an embodiment of the PSAD system.

Figure 19 is a plot of ΔM versus d_1 for several Δd values, under an embodiment.

Figure 20 shows a plot of the gain parameter as the sum of the absolute values of $H_1(z)$ and the acoustic data or audio from microphone 1, under an embodiment.

Figure 21 is an alternative plot of acoustic data presented in Figure 20, under an embodiment.

Figure 22 is a two-microphone adaptive noise suppression system, under an embodiment.

Figure 23 is a generalized two-microphone array (DOMA) including an array and speech source S configuration, under an embodiment.

Figure 24 is a system for generating or producing a first order gradient microphone V using two omnidirectional elements O_1 and O_2, under an embodiment.

Figure 25 is a block diagram for a DOMA including two physical microphones configured to form two virtual microphones V_1 and V_2, under an embodiment.

Figure 26 is a block diagram for a DOMA including two physical microphones configured to form N virtual microphones V_1 through V_N, where N is any number greater than one, under an embodiment.

Figure 27 is an example of a headset or head-worn device that includes the DOMA, as described herein, under an embodiment.

Figure 28 is a flow diagram for denoising acoustic signals using the DOMA, under an embodiment.

Figure 29 is a flow diagram for forming the DOMA, under an embodiment.

Figure 30 is a plot of linear response of virtual microphone V_2 with $\beta = 0.8$ to a 1 kHz speech source at a distance of 0.1 m, under an embodiment.

Figure 31 is a plot of linear response of virtual microphone V_2 with $\beta = 0.8$ to a 1 kHz noise source at a distance of 1.0 m, under an embodiment.

Figure 32 is a plot of linear response of virtual microphone V_1 with $\beta = 0.8$ to a 1 kHz speech source at a distance of 0.1 m, under an embodiment.

Figure 33 is a plot of linear response of virtual microphone V_1 with $\beta = 0.8$ to a 1 kHz noise source at a distance of 1.0 m, under an embodiment.

Figure 34 is a plot of linear response of virtual microphone V_1 with $\beta = 0.8$ to a speech source at a distance of 0.1 m for frequencies of 100, 500, 1000, 2000, 3000, and 4000 Hz, under an embodiment.

Figure 35 is a plot showing comparison of frequency responses for speech for the array of an embodiment and for a conventional cardioid microphone, under an embodiment.

Figure 36 is a plot showing speech response for V_1 (top, dashed) and V_2 (bottom, solid) versus B with d_s assumed to be 0.1 m, under an embodiment, under an embodiment.

Figure 37 is a plot showing a ratio of V_1/V_2 speech responses shown in **Figure 31** versus B, under an embodiment.

Figure 38 is a plot of B versus actual d_s assuming that d_s = 10 cm and theta = 0, under an embodiment.

Figure 39 is a plot of B versus theta with d_s = 10 cm and assuming d_s = 10 cm, under an embodiment.

Figure 40 is a plot of amplitude (top) and phase (bottom) response of N(s) with B = 1 and D = -7.2 μsec, under an embodiment.

Figure 41 is a plot of amplitude (top) and phase (bottom) response of N(s) with B = 1.2 and D = -7.2 μsec, under an embodiment.

Figure 42 is a plot of amplitude (top) and phase (bottom) response of the effect on the speech cancellation in V_2 due to a mistake in the location of the speech source with q1 = 0 degrees and q2 = 30 degrees, under an embodiment.

Figure 43 is a plot of amplitude (top) and phase (bottom) response of the effect on the speech cancellation in V_2 due to a mistake in the location of the speech source with q1 = 0 degrees and q2 = 45 degrees, under an embodiment.

Figure 44 shows experimental results for a $2d_0$ = 19 mm array using a linear β of 0.83 and B1 = B2 = 1 on a Bruel and Kjaer Head and Torso Simulator (HATS) in very loud (~85 dBA) music/speech noise environment.

DETAILED DESCRIPTION

Acoustic Voice Activity Detection (AVAD) methods and systems are described herein. The AVAD methods and systems, which include algorithms or programs, use microphones to generate virtual directional microphones which have very similar noise responses and very dissimilar speech responses. The ratio of the energies of the virtual

microphones is then calculated over a given window size and the ratio can then be used with a variety of methods to generate a VAD signal. The virtual microphones can be constructed using either a fixed or an adaptive filter. The adaptive filter generally results in a more accurate and noise-robust VAD signal but requires training. In addition, restrictions can be placed on the filter to ensure that it is training only on speech and not on environmental noise.

In the following description, numerous specific details are introduced to provide a thorough understanding of, and enabling description for, embodiments. One skilled in the relevant art, however, will recognize that these embodiments can be practiced without one or more of the specific details, or with other components, systems, etc. In other instances, well-known structures or operations are not shown, or are not described in detail, to avoid obscuring aspects of the disclosed embodiments.

Figure 1 is a configuration of a two-microphone array of the AVAD with speech source S, under an embodiment. The AVAD of an embodiment uses two physical microphones (O_1 and O_2) to form two virtual microphones (V_1 and V_2). The virtual microphones of an embodiment are directional microphones, but the embodiment is not so limited. The physical microphones of an embodiment include omnidirectional microphones, but the embodiments described herein are not limited to omnidirectional microphones. The virtual microphone (VM) V_2 is configured in such a way that it has minimal response to the speech of the user, while V_1 is configured so that it does respond to the user's speech but has a very similar noise magnitude response to V_2, as described in detail herein. The PSAD VAD methods can then be used to determine when speech is taking place. A further refinement is the use of an adaptive filter to further minimize the speech response of V_2, thereby increasing the speech energy ratio used in PSAD and resulting in better overall performance of the AVAD.

The PSAD algorithm as described herein calculates the ratio of the energies of two directional microphones M_1 and M_2:

$$R = \sum_i \sqrt{\frac{M_1(z_i)^2}{M_2(z_i)^2}}$$

where the "z" indicates the discrete frequency domain and "i" ranges from the beginning of the window of interest to the end, but the same relationship holds in the time domain. The summation can occur over a window of any length; 200 samples at a sampling rate of 8 kHz has been used to good effect. Microphone M_1 is assumed to have a greater speech response than microphone M_2. The ratio R depends on the relative strength of the acoustic signal of interest as detected by the microphones.

For matched omnidirectional microphones (i.e. they have the same response to acoustic signals for all spatial orientations and frequencies), the size of R can be calculated for speech and noise by approximating the propagation of speech and noise waves as spherically symmetric sources. For these the energy of the propagating wave decreases as $^1/_{r^2}$:

$$R = \sum_i \sqrt{\frac{M_1(z_i)^2}{M_2(z_i)^2}} = \frac{d_2}{d_1} = \frac{d_1 + d}{d_1}$$

The distance d_1 is the distance from the acoustic source to M_1, d_2 is the distance from the acoustic source to M_2, and $d = d_2 - d_1$ (see **Figure 1**). It is assumed that O_1 is closer to the speech source (the user's mouth) so that d is always positive. If the microphones and the user's mouth are all on a line, then $d = 2d_0$, the distance between the

microphones. For matched omnidirectional microphones, the magnitude of R, depends only on the relative distance between the microphones and the acoustic source. For noise sources, the distances are typically a meter or more, and for speech sources, the distances are on the order of 10 cm, but the distances are not so limited. Therefore for a 2-cm array typical values of R are:

$$R_S = \frac{d_2}{d_1} \approx \frac{12\ cm}{10\ cm} = 1.2$$

$$R_N = \frac{d_2}{d_1} \approx \frac{102\ cm}{100\ cm} = 1.02$$

where the "S" subscript denotes the ratio for speech sources and "N" the ratio for noise sources. There is not a significant amount of separation between noise and speech sources in this case, and therefore it would be difficult to implement a robust solution using simple omnidirectional microphones.

A better implementation is to use directional microphones where the second microphone has minimal speech response. As described herein, such microphones can be constructed using omnidirectional microphones O_1 and O_2:

$$V_1(z) = -\beta(z)\alpha(z)O_2(z) + O_1(z)z^{-\gamma}$$

$$V_2(z) = \alpha(z)O_2(z) - \beta(z)O_1(z)z^{-\gamma}$$

where $\alpha(z)$ is a calibration filter used to compensate O_2's response so that it is the same as O_1, $\beta(z)$ is a filter that describes the relationship between O_1 and calibrated O_2 for speech, and γ is a fixed delay that depends on the size of the array. There is no loss of generality in defining $\alpha(z)$ as above, as either microphone may be compensated to

match the other. For this configuration V_1 and V_2 have very similar noise response magnitudes and very dissimilar speech response magnitudes if

$$\gamma = \frac{d}{c}$$

where again $d = 2d_0$ and c is the speed of sound in air, which is temperature dependent and approximately

$$c = 331.3\sqrt{1 + \frac{T}{273.15}} \quad \frac{m}{sec}$$

where T is the temperature of the air in Celsius.

The filter $\beta(z)$ can be calculated using wave theory to be

$$\beta(z) = \frac{d_1}{d_2} = \frac{d_1}{d_1 + d} \qquad [2]$$

where again d_k is the distance from the user's mouth to O_k. **Figure 2** is a block diagram of V_2 construction using a fixed $\beta(z)$, under an embodiment. This fixed (or static) β works sufficiently well if the calibration filter $\alpha(z)$ is accurate and d_1 and d_2 are accurate for the user. This fixed-β algorithm, however, neglects important effects such as reflection, diffraction, poor array orientation (i.e. the microphones and the mouth of the user are not all on a line), and the possibility of different d_1 and d_2 values for different users.

The filter $\beta(z)$ can also be determined experimentally using an adaptive filter. **Figure 3** is a block diagram of V_2 construction using an adaptive $\beta(z)$, under an embodiment, where:

$$\tilde{\beta}(z) = \frac{\alpha(z)O_2(z)}{z^{-\gamma}O_1(z)} \qquad [3]$$

The adaptive process varies $\tilde{\beta}(z)$ to minimize the output of V_2 when only speech is being received by O_1 and O_2. A small amount of noise may be tolerated with little ill effect, but it is preferred that only speech is being received when the coefficients of $\tilde{\beta}(z)$ are calculated. Any adaptive process may be used; a normalized least-mean squares (NLMS) algorithm was used in the examples below.

The V_1 can be constructed using the current value for $\tilde{\beta}(z)$ or the fixed filter $\beta(z)$ can be used for simplicity. **Figure 4** is a block diagram of V_1 construction, under an embodiment.

Now the ratio R is

$$R = \frac{\|V_1(z)\|}{\|V_2(z)\|} = \sqrt{\frac{\left(-\tilde{\beta}(z)\alpha(z)O_2(z) + O_1(z)z^{-\gamma}\right)^2}{\left(\alpha(z)O_2(z) - \tilde{\beta}(z)O_1(z)z^{-\gamma}\right)^2}}$$

where double bar indicates norm and again any size window may be used. If $\tilde{\beta}(z)$ has been accurately calculated, the ratio for speech should be relatively high (e.g., greater than approximately 2) and the ratio for noise should be relatively low (e.g., less than approximately 1.1). The ratio calculated will depend on both the relative energies of the speech and noise as well as the orientation of the noise and the reverberance of the environment. In practice, either the adapted filter $\tilde{\beta}(z)$ or the static filter b(z) may be used for $V_1(z)$ with little effect on R – but it is important to use the adapted filter $\tilde{\beta}(z)$ in $V_2(z)$ for best performance. Many techniques known to those skilled in the art (e.g., smoothing, etc.) can be used to make R more amenable to use in generating a VAD and the embodiments herein are not so limited.

The ratio R can be calculated for the entire frequency band of interest, or can be calculated in frequency subbands. One effective subband discovered was 250 Hz to 1250 Hz, another was 200 Hz to 3000 Hz, but many others are possible and useful.

Once generated, the vector of the ratio R versus time (or the matrix of R versus time if multiple subbands are used) can be used with any detection system (such as one that uses fixed and/or adaptive thresholds) to determine when speech is occurring. While many detection systems and methods are known to exist by those skilled in the art and may be used, the method described herein for generating an R so that the speech is easily discernable is novel. It is important to note that the R does not depend on the type of noise or its orientation or frequency content; R simply depends on the V_1 and V_2 spatial response similarity for noise and spatial response dissimilarity for speech. In this way it is very robust and can operate smoothly in a variety of noisy acoustic environments.

Figure 5 is a flow diagram of acoustic voice activity detection 500, under an embodiment. The detection comprises forming a first virtual microphone by combining a first signal of a first physical microphone and a second signal of a second physical microphone 502. The detection comprises forming a filter that describes a relationship for speech between the first physical microphone and the second physical microphone 504. The detection comprises forming a second virtual microphone by applying the filter to the first signal to generate a first intermediate signal, and summing the first intermediate signal and the second signal 506. The detection comprises generating an energy ratio of energies of the first virtual microphone and the second virtual microphone 508. The detection comprises detecting acoustic voice activity of a speaker when the energy ratio is greater than a threshold value 510.

The accuracy of the adaptation to the $\beta(z)$ of the system is a factor in determining the effectiveness of the AVAD. A more accurate adaptation to the actual $\beta(z)$ of the system leads to lower energy of the speech response in V_2, and a higher ratio R. The noise (far-field) magnitude response is largely unchanged by the adaptation process, so the ratio R will be near unity for accurately adapted beta. For purposes of accuracy, the system can be trained on speech alone, or the noise should be low enough in energy so as not to affect or to have a minimal affect the training.

To make the training as accurate as possible, the coefficients of the filter $\beta(z)$ of an embodiment are generally updated under the following conditions, but the embodiment is not so limited: speech is being produced (requires a relatively high SNR or other method of detection such as an Aliph Skin Surface Microphone (SSM) as described in United States Patent Application number 10/769,302, filed January 30, 2004, which is incorporated by reference herein in its entirety); no wind is detected (wind can be detected using many different methods known in the art, such as examining the microphones for uncorrelated low-frequency noise); and the current value of R is much larger than a smoothed history of R values (this ensures that training occurs only when strong speech is present). These procedures are flexible and others may be used without significantly affecting the performance of the system. These restrictions can make the system relatively more robust.

Even with these precautions, it is possible that the system accidentally trains on noise (e.g., there may be a higher likelihood of this without use of a non-acoustic VAD device such as the SSM used in the Jawbone headset produced by Aliph, San Francisco, California). Thus, an embodiment includes a further failsafe system to preclude accidental training from significantly disrupting the system. The adaptive β is limited to certain values expected for speech. For

example, values for d_1 for an ear-mounted headset will normally fall between 9 and 14 centimeters, so using an array length of $2d_0 = 2.0$ cm and **Equation 2** above,

$$|\beta(z)| = \frac{d_1}{d_2} \approx \frac{d_1}{d_1 + 2d_0}$$

which means that

$$0.82 < |\beta(z)| < 0.88.$$

The magnitude of the β filter can therefore be limited to between approximately 0.82 and 0.88 to preclude problems if noise is present during training. Looser limits can be used to compensate for inaccurate calibrations (the response of omnidirectional microphones is usually calibrated to one another so that their frequency response is the same to the same acoustic source – if the calibration is not completely accurate the virtual microphones may not form properly).

Similarly, the phase of the β filter can be limited to be what is expected from a speech source within +- 30 degrees from the axis of the array. As described herein, and with reference to **Figure 1**,

$$\gamma = \frac{d_2 - d_1}{c} \qquad \text{(seconds)}$$

$$d_1 = \sqrt{d_S^2 - 2d_S d_0 \cos(\theta) + d_0^2}$$

$$d_2 = \sqrt{d_S^2 + 2d_S d_0 \cos(\theta) + d_0^2}$$

where d_S is the distance from the midpoint of the array to the speech source. Varying d_S from 10 to 15 cm and allowing θ to vary between 0 and +- 30 degrees, the maximum difference in γ results from the difference of γ at 0 degrees (58.8 μsec) and γ at +-30 degrees for d_S =

10 cm (50.8 μsec). This means that the maximum expected phase difference is 58.8 – 50.8 = 8.0 μsec, or 0.064 samples at an 8 kHz sampling rate. Since

$$\varphi(f) = 2\pi f t = 2\pi f(8.0x10^{-6})\ rad$$

the maximum phase difference realized at 4 kHz is only 0.2 rad or about 11.4 degrees, a small amount, but not a negligible one. Therefore the β filter should almost linear phase, but some allowance made for differences in position and angle. In practice a slightly larger amount was used (0.071 samples at 8 kHz) in order to compensate for poor calibration and diffraction effects, and this worked well. The limit on the phase in the example below was implemented as the ratio of the central tap energy to the combined energy of the other taps:

$$\text{phase limit ratio} = \frac{(center\ tap)^2}{\|\beta\|}$$

where β is the current estimate. This limits the phase by restricting the effects of the non-center taps. Other ways of limiting the phase of the beta filter are known to those skilled in the art and the algorithm presented here is not so limited.

Embodiments are presented herein that use both a fixed β(z) and an adaptive β(z), as described in detail above. In both cases, R was calculated using frequencies between 250 and 3000 Hz using a window size of 200 samples at 8 kHz. The results for V_1 (top plot), V_2 (middle plot), R (bottom plot, solid line, windowed using a 200 sample rectangular window at 8 kHz) and the VAD (bottom plot, dashed line) are shown in **Figures 6-11**. **Figures 6-11** demonstrate the use of a fixed beta filter β(z) in conditions of only noise (street and bus noise, approximately 70 dB SPL at the ear), only speech (normalized to 94 dB SPL at the mouth reference point (MRP)), and mixed noise and speech, respectively. A Bruel & Kjaer Head and Torso Simulator (HATS) was used for the tests

and the omnidirectional microphones mounted on HATS' ear with the midline of the array approximately 11 cm from the MRP. The fixed beta filter used was $\beta_F(z)=0.82$, where the "F" subscript indicates a fixed filter. The VAD was calculated using a fixed threshold of 1.5.

Figure 6 shows experimental results of the algorithm using a fixed beta when only noise is present, under an embodiment. The top plot is V_1, the middle plot is V_2, and the bottom plot is R (solid line) and the VAD result (dashed line) versus time. Examining **Figure 6**, the response of both V_1 and V_2 are very similar, and the ratio R is very near unity for the entire sample. The VAD response has occasional false positives denoted by spikes in the R plot (windows that are identified by the algorithm as containing speech when they do not), but these are easily removed using standard pulse removal algorithms and/or smoothing of the R results.

Figure 7 shows experimental results of the algorithm using a fixed beta when only speech is present, under an embodiment. The top plot is V_1, the middle plot is V_2, and the bottom plot is R (solid line) and the VAD result (dashed line) versus time. The R ratio is between approximately 2 and approximately 7 on average, and the speech is easily discernable using the fixed threshold. These results show that the response of the two virtual microphones to speech are very different, and indeed that ratio R varies from 2-7 during speech. There are very few false positives and very few false negatives (windows that contain speech but are not identified as speech windows). The speech is easily and accurately detected.

Figure 8 shows experimental results of the algorithm using a fixed beta when speech and noise is present, under an embodiment. The top plot is V_1, the middle plot is V_2, and the bottom plot is R (solid line) and the VAD result (dashed line) versus time. The R ratio is lower than when no noise is present, but the VAD remains accurate with only a few false positives. There are more false negatives than with no

noise, but the speech remains easily detectable using standard thresholding algorithms. Even in a moderately loud noise environment (**Figure 8**) the R ratio remains significantly above unity, and the VAD once again returns few false positives. More false negatives are observed, but these may be reduced using standard methods such as smoothing of R and allowing the VAD to continue reporting voiced windows for a few windows after R is under the threshold.

Results using the adaptive beta filter are shown in **Figures 9-11**. The adaptive filter used was a five-tap NLMS FIR filter using the frequency band from 100 Hz to 3500 Hz. A fixed filter of $z^{-0.43}$ is used to filter O_1 so that O_1 and O_2 are aligned for speech before the adaptive filter is calculated. The adaptive filter was constrained using the methods above using a low β limit of 0.73, a high β limit of 0.98, and a phase limit ratio of 0.98. Again a fixed threshold was used to generate the VAD result from the ratio R, but in this case a threshold value of 2.5 was used since the R values using the adaptive beta filter are normally greater than when the fixed filter is used. This allows for a reduction of false positives without significantly increasing false negatives.

Figure 9 shows experimental results of the algorithm using an adaptive beta when only noise is present, under an embodiment. The top plot is V_1, the middle plot is V_2, and the bottom plot is R (solid line) and the VAD result (dashed line) versus time, with the y-axis expanded to 0-50. Again, V_1 and V_2 are very close in energy and the R ratio is near unity. Only a single false positive was generated.

Figure 10 shows experimental results of the algorithm using an adaptive beta when only speech is present, under an embodiment. The top plot is V_1, the middle plot is V_2, and the bottom plot is (solid line) and the VAD result (dashed line) versus time, expanded to 0-50. The V_2 response is greatly reduced using the adaptive beta, and the R ratio has increased from the range of approximately 2-7 to the range of approximately 5-30 on average, making the speech even simpler to

detect using standard thresholding algorithms. There are almost no false positives or false negatives. Therefore, the response of V_2 to speech is minimal, R is very high, and all of the speech is easily detected with almost no false positives.

Figure 11 shows experimental results of the algorithm using an adaptive beta when speech and noise is present, under an embodiment. The top plot is V_1, the middle plot is V_2, and the bottom plot is R (solid line) and the VAD result (dashed line) versus time, with the y-axis expanded to 0-50. The R ratio is again lower than when no noise is present, but this R with significant noise present results in a VAD signal that is about the same as the case using the fixed beta with no noise present. This shows that use of the adaptive beta allows the system to perform well in higher noise environments than the fixed beta. Therefore, with mixed noise and speech, there are again very few false positives and fewer false negatives than in the results of **Figure 8**, demonstrating that the adaptive filter can outperform the fixed filter in the same noise environment. In practice, the adaptive filter has proven to be significantly more sensitive to speech and less sensitive to noise.

Detecting voiced and unvoiced speech using both acoustic and nonacoustic sensors

Systems and methods for discriminating voiced and unvoiced speech from background noise are now described including a Pathfinder Speech Activity Detection (PSAD) system, referenced above, and a Non-Acoustic Sensor Voiced Speech Activity Detection (NAVSAD) system. The noise removal and reduction methods provided herein, while allowing for the separation and classification of unvoiced and voiced human speech from background noise, address the shortcomings of typical systems known in the art by cleaning acoustic signals of interest without distortion

Figure 12 is a block diagram of a NAVSAD system 1200, under an embodiment. The NAVSAD system couples microphones 1210 and sensors 1220 to at least one processor 1230. The sensors1220 of an embodiment include voicing activity detectors or non-acoustic sensors. The processor 1230 controls subsystems including a detection subsystem 1250, referred to herein as a

detection algorithm, and a denoising subsystem 1240. Operation of the denoising subsystem 1240 is described in detail in the Related Applications. The NAVSAD system works extremely well in any background acoustic noise environment.

Figure 13 is a block diagram of a PSAD system 1300, under an embodiment. The PSAD system couples microphones 1210 to at least one processor 1230. The processor 1230 includes a detection subsystem 1250, referred to herein as a detection algorithm, and a denoising subsystem 1240. The PSAD system is highly sensitive in low acoustic noise environments and relatively insensitive in high acoustic noise environments. The PSAD can operate independently or as a backup to the NAVSAD, detecting voiced speech if the NAVSAD fails.

Note that the detection subsystems 1250 and denoising subsystems 1240 of both the NAVSAD and PSAD systems of an embodiment are algorithms controlled by the processor 1230, but are not so limited. Alternative embodiments of the NAVSAD and PSAD systems can include detection subsystems 1250 and/or denoising subsystems 1240 that comprise additional hardware, firmware, software, and/or combinations of hardware, firmware, and software. Furthermore, functions of the detection subsystems 1250 and denoising subsystems 1240 may be distributed across numerous components of the NAVSAD and PSAD systems.

Figure 14 is a block diagram of a denoising subsystem 1400, referred to herein as the Pathfinder system, under an embodiment. The Pathfinder system is briefly described below, and is described in detail in the Related Applications. Two microphones Mic 1 and Mic 2 are used in the Pathfinder system, and Mic 1 is considered the "signal" microphone. With reference to **Figure 12**, the Pathfinder system 1400 is equivalent to the NAVSAD system 1200 when the voicing activity detector (VAD) 1420 is a non-acoustic voicing sensor 1220 and the noise removal subsystem 1440 includes the detection subsystem 1250 and the denoising subsystem 1240. With reference to **Figure 13**, the Pathfinder system 1400 is equivalent to the PSAD system 1300 in the absence of the VAD 1420, and when the noise removal subsystem 1440 includes the detection subsystem 1250 and the denoising subsystem 1240.

The NAVSAD and PSAD systems support a two-level commercial approach in which (i) a relatively less expensive PSAD system supports an acoustic

approach that functions in most low- to medium-noise environments, and (ii) a NAVSAD system adds a non-acoustic sensor to enable detection of voiced speech in any environment. Unvoiced speech is normally not detected using the sensor, as it normally does not sufficiently vibrate human tissue. However, in high noise situations detecting the unvoiced speech is not as important, as it is normally very low in energy and easily washed out by the noise. Therefore in high noise environments the unvoiced speech is unlikely to affect the voiced speech denoising. Unvoiced speech information is most important in the presence of little to no noise and, therefore, the unvoiced detection should be highly sensitive in low noise situations, and insensitive in high noise situations. This is not easily accomplished, and comparable acoustic unvoiced detectors known in the art are incapable of operating under these environmental constraints.

The NAVSAD and PSAD systems include an array algorithm for speech detection that uses the difference in frequency content between two microphones to calculate a relationship between the signals of the two microphones. This is in contrast to conventional arrays that attempt to use the time/phase difference of each microphone to remove the noise outside of an "area of sensitivity". The methods described herein provide a significant advantage, as they do not require a specific orientation of the array with respect to the signal.

Further, the systems described herein are sensitive to noise of every type and every orientation, unlike conventional arrays that depend on specific noise orientations. Consequently, the frequency-based arrays presented herein are unique as they depend only on the relative orientation of the two microphones themselves with no dependence on the orientation of the noise and signal with respect to the microphones. This results in a robust signal processing system with respect to the type of noise, microphones, and orientation between the noise/signal source and the microphones.

The systems described herein use the information derived from the Pathfinder noise suppression system and/or a non-acoustic sensor described in the Related Applications to determine the voicing state of an input signal, as described in detail below. The voicing state includes silent, voiced, and unvoiced states. The NAVSAD system, for example, includes a non-acoustic sensor to detect the vibration of human tissue associated with speech. The non-acoustic

sensor of an embodiment is a General Electromagnetic Movement Sensor (GEMS) as described briefly below and in detail in the Related Applications, but is not so limited. Alternative embodiments, however, may use any sensor that is able to detect human tissue motion associated with speech and is unaffected by environmental acoustic noise.

The GEMS is a radio frequency device (2.4 GHz) that allows the detection of moving human tissue dielectric interfaces. The GEMS includes an RF interferometer that uses homodyne mixing to detect small phase shifts associated with target motion. In essence, the sensor sends out weak electromagnetic waves (less than 1 milliwatt) that reflect off of whatever is around the sensor. The reflected waves are mixed with the original transmitted waves and the results analyzed for any change in position of the targets. Anything that moves near the sensor will cause a change in phase of the reflected wave that will be amplified and displayed as a change in voltage output from the sensor. A similar sensor is described by Gregory C. Burnett (1999) in "The physiological basis of glottal electromagnetic micropower sensors (GEMS) and their use in defining an excitation function for the human vocal tract"; Ph.D. Thesis, University of California at Davis.

Figure 15 is a flow diagram of a detection algorithm 1250 for use in detecting voiced and unvoiced speech, under an embodiment. With reference to **Figures 12 and 13**, both the NAVSAD and PSAD systems of an embodiment include the detection algorithm 1250 as the detection subsystem 1250. This detection algorithm 1250 operates in real-time and, in an embodiment, operates on 20 millisecond windows and steps 10 milliseconds at a time, but is not so limited. The voice activity determination is recorded for the first 10 milliseconds, and the second 10 milliseconds functions as a "look-ahead" buffer. While an embodiment uses the 20/10 windows, alternative embodiments may use numerous other combinations of window values.

Consideration was given to a number of multi-dimensional factors in developing the detection algorithm1250. The biggest consideration was to maintaining the effectiveness of the Pathfinder denoising technique, described in detail in the Related Applications and reviewed herein. Pathfinder performance can be compromised if the adaptive filter training is conducted on speech rather

than on noise. It is therefore important not to exclude any significant amount of speech from the VAD to keep such disturbances to a minimum.

Consideration was also given to the accuracy of the characterization between voiced and unvoiced speech signals, and distinguishing each of these speech signals from noise signals. This type of characterization can be useful in such applications as speech recognition and speaker verification.

Furthermore, the systems using the detection algorithm of an embodiment function in environments containing varying amounts of background acoustic noise. If the non-acoustic sensor is available, this external noise is not a problem for voiced speech. However, for unvoiced speech (and voiced if the non-acoustic sensor is not available or has malfunctioned) reliance is placed on acoustic data alone to separate noise from unvoiced speech. An advantage inheres in the use of two microphones in an embodiment of the Pathfinder noise suppression system, and the spatial relationship between the microphones is exploited to assist in the detection of unvoiced speech. However, there may occasionally be noise levels high enough that the speech will be nearly undetectable and the acoustic-only method will fail. In these situations, the non-acoustic sensor (or hereafter just the sensor) will be required to ensure good performance.

In the two-microphone system, the speech source should be relatively louder in one designated microphone when compared to the other microphone. Tests have shown that this requirement is easily met with conventional microphones when the microphones are placed on the head, as any noise should result in an H_1 with a gain near unity.

Regarding the NAVSAD system, and with reference to **Figure 12 and Figure 14**, the NAVSAD relies on two parameters to detect voiced speech. These two parameters include the energy of the sensor in the window of interest, determined in an embodiment by the standard deviation (SD), and optionally the cross-correlation (XCORR) between the acoustic signal from microphone 1 and the sensor data. The energy of the sensor can be determined in any one of a number of ways, and the SD is just one convenient way to determine the energy.

For the sensor, the SD is akin to the energy of the signal, which normally corresponds quite accurately to the voicing state, but may be susceptible to movement noise (relative motion of the sensor with respect to the human user)

and/or electromagnetic noise. To further differentiate sensor noise from tissue motion, the XCORR can be used. The XCORR is only calculated to 15 delays, which corresponds to just under 2 milliseconds at 8000 Hz.

The XCORR can also be useful when the sensor signal is distorted or modulated in some fashion. For example, there are sensor locations (such as the jaw or back of the neck) where speech production can be detected but where the signal may have incorrect or distorted time-based information. That is, they may not have well defined features in time that will match with the acoustic waveform. However, XCORR is more susceptible to errors from acoustic noise, and in high (<0 dB SNR) environments is almost useless. Therefore it should not be the sole source of voicing information.

The sensor detects human tissue motion associated with the closure of the vocal folds, so the acoustic signal produced by the closure of the folds is highly correlated with the closures. Therefore, sensor data that correlates highly with the acoustic signal is declared as speech, and sensor data that does not correlate well is termed noise. The acoustic data is expected to lag behind the sensor data by about 0.1 to 0.8 milliseconds (or about 1-7 samples) as a result of the delay time due to the relatively slower speed of sound (around 330 m/s). However, an embodiment uses a 15-sample correlation, as the acoustic wave shape varies significantly depending on the sound produced, and a larger correlation width is needed to ensure detection.

The SD and XCORR signals are related, but are sufficiently different so that the voiced speech detection is more reliable. For simplicity, though, either parameter may be used. The values for the SD and XCORR are compared to empirical thresholds, and if both are above their threshold, voiced speech is declared. Example data is presented and described below.

Figures 16A, 16B, and 17 show data plots for an example in which a subject twice speaks the phrase "pop pan", under an embodiment. **Figure 16A** plots the received GEMS signal 1602 for this utterance along with the mean correlation 1604 between the GEMS signal and the Mic 1 signal and the threshold T1 used for voiced speech detection. **Figure 16B** plots the received GEMS signal 1602 for this utterance along with the standard deviation 1606 of the GEMS signal and the threshold T2 used for voiced speech detection. **Figure 17** plots voiced

speech 1702 detected from the acoustic or audio signal 1708, along with the GEMS signal 1704 and the acoustic noise 1706; no unvoiced speech is detected in this example because of the heavy background babble noise 1706. The thresholds have been set so that there are virtually no false negatives, and only occasional false positives. A voiced speech activity detection accuracy of greater than 99% has been attained under any acoustic background noise conditions

The NAVSAD can determine when voiced speech is occurring with high degrees of accuracy due to the non-acoustic sensor data. However, the sensor offers little assistance in separating unvoiced speech from noise, as unvoiced speech normally causes no detectable signal in most non-acoustic sensors. If there is a detectable signal, the NAVSAD can be used, although use of the SD method is dictated as unvoiced speech is normally poorly correlated. In the absence of a detectable signal use is made of the system and methods of the Pathfinder noise removal algorithm in determining when unvoiced speech is occurring. A brief review of the Pathfinder algorithm is described below, while a detailed description is provided in the Related Applications.

With reference to **Figure 14**, the acoustic information coming into Microphone 1 is denoted by $m_1(n)$, the information coming into Microphone 2 is similarly labeled $m_2(n)$, and the GEMS sensor is assumed available to determine voiced speech areas. In the z (digital frequency) domain, these signals are represented as $M_1(z)$ and $M_2(z)$. Then

$$M_1(z) = S(z) + N_2(z)$$
$$M_2(z) = N(z) + S_2(z)$$

with

$$N_2(z) = N(z)H_1(z)$$
$$S_2(z) = S(z)H_2(z)$$

so that

$$\begin{aligned} M_1(z) &= S(z) + N(z)H_1(z) \\ M_2(z) &= N(z) + S(z)H_2(z) \end{aligned} \tag{1}$$

This is the general case for all two microphone systems. There is always going to be some leakage of noise into Mic 1, and some leakage of signal into Mic 2.

Equation 1 has four unknowns and only two relationships and cannot be solved explicitly

However, there is another way to solve for some of the unknowns in Equation 1. Examine the case where the signal is not being generated – that is, where the GEMS signal indicates voicing is not occurring. In this case, s(n) = S(z) = 0, and Equation 1 reduces to

$$M_{1n}(z) = N(z)H_1(z)$$
$$M_{2n}(z) = N(z)$$

where the *n* subscript on the M variables indicate that only noise is being received This leads to

$$M_{1n}(z) = M_{2n}(z)H_1(z)$$
$$H_1(z) = \frac{M_{1n}(z)}{M_{2n}(z)} \qquad (2)$$

$H_1(z)$ can be calculated using any of the available system identification algorithms and the microphone outputs when only noise is being received. The calculation can be done adaptively, so that if the noise changes significantly $H_1(z)$ can be recalculated quickly.

With a solution for one of the unknowns in Equation 1, solutions can be found for another, $H_2(z)$, by using the amplitude of the GEMS or similar device along with the amplitude of the two microphones. When the GEMS indicates voicing, but the recent (less than 1 second) history of the microphones indicate low levels of noise, assume that n(s) = N(z) ~ 0. Then Equation 1 reduces to

$$M_{1s}(z) = S(z)$$
$$M_{2s}(z) = S(z)H_2(z)$$

which in turn leads to

$$M_{2s}(z) = M_{1s}(z)H_2(z)$$
$$H_2(z) = \frac{M_{2s}(z)}{M_{1s}(z)}$$

which is the inverse of the $H_1(z)$ calculation, but note that different inputs are being used

After calculating $H_1(z)$ and $H_2(z)$ above, they are used to remove the noise from the signal. Rewrite Equation 1 as

$$S(z) = M_1(z) - N(z)H_1(z)$$
$$N(z) = M_2(z) - S(z)H_2(z)$$
$$S(z) = M_1(z) - [M_2(z) - S(z)H_2(z)]H_1(z)$$
$$S(z)[1 - H_2(z)H_1(z)] = M_1(z) - M_2(z)H_1(z)$$

and solve for S(z) as:

$$S(z) = \frac{M_1(z) - M_2(z)H_1(z)}{1 - H_2(z)H_1(z)}. \tag{3}$$

In practice $H_2(z)$ is usually quite small, so that $H_2(z)H_1(z) << 1$, and

$$S(z) \approx M_1(z) - M_2(z)H_1(z),$$

obviating the need for the $H_2(z)$ calculation.

With reference to **Figure 13** and **Figure 14**, the PSAD system is described. As sound waves propagate, they normally lose energy as they travel due to diffraction and dispersion. Assuming the sound waves originate from a point source and radiate isotropically, their amplitude will decrease as a function of 1/r, where r is the distance from the originating point. This function of 1/r proportional to amplitude is the worst case, if confined to a smaller area the reduction will be less. However it is an adequate model for the configurations of interest, specifically the propagation of noise and speech to microphones located somewhere on the user's head.

Figure 18 is a microphone array for use under an embodiment of the PSAD system. Placing the microphones Mic 1 and Mic 2 in a linear array with the mouth on the array midline, the difference in signal strength in Mic 1 and Mic 2 (assuming the microphones have identical frequency responses) will be proportional to both d_1 and Δd. Assuming a 1/r (or in this case 1/d) relationship, it is seen that

$$\Delta M = \frac{|\mathrm{Mic1}|}{|\mathrm{Mic2}|} = \Delta H_1(z) \propto \frac{d_1 + \Delta d}{d_1},$$

where ΔM is the difference in gain between Mic 1 and Mic 2 and therefore $H_1(z)$, as above in Equation 2. The variable d_1 is the distance from Mic 1 to the speech or noise source.

Figure 19 is a plot 1900 of ΔM versus d_1 for several Δd values, under an embodiment. It is clear that as Δd becomes larger and the noise source is closer,

ΔM becomes larger. The variable Δd will change depending on the orientation to the speech/noise source, from the maximum value on the array midline to zero perpendicular to the array midline From the plot 1900 it is clear that for small Δd and for distances over approximately 30 centimeters (cm), ΔM is close to unity. Since most noise sources are farther away than 30 cm and are unlikely to be on the midline on the array, it is probable that when calculating $H_1(z)$ as above in Equation 2, ΔM (or equivalently the gain of $H_1(z)$) will be close to unity. Conversely, for noise sources that are close (within a few centimeters), there could be a substantial difference in gain depending on which microphone is closer to the noise.

If the "noise" is the user speaking, and Mic 1 is closer to the mouth than Mic 2, the gain increases. Since environmental noise normally originates much farther away from the user's head than speech, noise will be found during the time when the gain of $H_1(z)$ is near unity or some fixed value, and speech can be found after a sharp rise in gain. The speech can be unvoiced or voiced, as long as it is of sufficient volume compared to the surrounding noise. The gain will stay somewhat high during the speech portions, then descend quickly after speech ceases. The rapid increase and decrease in the gain of $H_1(z)$ should be sufficient to allow the detection of speech under almost any circumstances. The gain in this example is calculated by the sum of the absolute value of the filter coefficients. This sum is not equivalent to the gain, but the two are related in that a rise in the sum of the absolute value reflects a rise in the gain.

As an example of this behavior, **Figure 20** shows a plot 2000 of the gain parameter 2002 as the sum of the absolute values of $H_1(z)$ and the acoustic data 2004 or audio from microphone 1. The speech signal was an utterance of the phrase "pop pan", repeated twice. The evaluated bandwidth included the frequency range from 2500 Hz to 3500 Hz, although 1500Hz to 2500 Hz was additionally used in practice. Note the rapid increase in the gain when the unvoiced speech is first encountered, then the rapid return to normal when the speech ends. The large changes in gain that result from transitions between noise and speech can be detected by any standard signal processing techniques. The standard deviation of the last few gain calculations is used, with thresholds being

defined by a running average of the standard deviations and the standard deviation noise floor. The later changes in gain for the voiced speech are suppressed in this plot 2000 for clarity.

Figure 21 is an alternative plot 2100 of acoustic data presented in Figure 20. The data used to form plot 2000 is presented again in this plot 2100, along with audio data 2104 and GEMS data 2106 without noise to make the unvoiced speech apparent. The voiced signal 2102 has three possible values: 0 for noise, 1 for unvoiced, and 2 for voiced. Denoising is only accomplished when V = 0. It is clear that the unvoiced speech is captured very well, aside from two single dropouts in the unvoiced detection near the end of each "pop". However, these single-window dropouts are not common and do not significantly affect the denoising algorithm. They can easily be removed using standard smoothing techniques.

What is not clear from this plot 2100 is that the PSAD system functions as an automatic backup to the NAVSAD. This is because the voiced speech (since it has the same spatial relationship to the mics as the unvoiced) will be detected as unvoiced if the sensor or NAVSAD system fail for any reason. The voiced speech will be misclassified as unvoiced, but the denoising will still not take place, preserving the quality of the speech signal.

However, this automatic backup of the NAVSAD system functions best in an environment with low noise (approximately 10+ dB SNR), as high amounts (10 dB of SNR or less) of acoustic noise can quickly overwhelm any acoustic-only unvoiced detector, including the PSAD. This is evident in the difference in the voiced signal data 1702 and 2102 shown in plots 1700 and 1200 of **Figures 17 and 21**, respectively, where the same utterance is spoken, but the data of plot 1700 shows no unvoiced speech because the unvoiced speech is undetectable. This is the desired behavior when performing denoising, since if the unvoiced speech is not detectable then it will not significantly affect the denoising process. Using the Pathfinder system to detect unvoiced speech ensures detection of any unvoiced speech loud enough to distort the denoising.

Regarding hardware considerations, and with reference to **Figure 18**, the configuration of the microphones can have an effect on the change in gain associated with speech and the thresholds needed to detect speech. In general,

each configuration will require testing to determine the proper thresholds, but tests with two very different microphone configurations showed the same thresholds and other parameters to work well. The first microphone set had the signal microphone near the mouth and the noise microphone several centimeters away at the ear, while the second configuration placed the noise and signal microphones back-to-back within a few centimeters of the mouth. The results presented herein were derived using the first microphone configuration, but the results using the other set are virtually identical, so the detection algorithm is relatively robust with respect to microphone placement.

A number of configurations are possible using the NAVSAD and PSAD systems to detect voiced and unvoiced speech. One configuration uses the NAVSAD system (non-acoustic only) to detect voiced speech along with the PSAD system to detect unvoiced speech; the PSAD also functions as a backup to the NAVSAD system for detecting voiced speech. An alternative configuration uses the NAVSAD system (non-acoustic correlated with acoustic) to detect voiced speech along with the PSAD system to detect unvoiced speech; the PSAD also functions as a backup to the NAVSAD system for detecting voiced speech. Another alternative configuration uses the PSAD system to detect both voiced and unvoiced speech.

While the systems described above have been described with reference to separating voiced and unvoiced speech from background acoustic noise, there are no reasons more complex classifications can not be made. For more in-depth characterization of speech, the system can bandpass the information from Mic 1 and Mic 2 so that it is possible to see which bands in the Mic 1 data are more heavily composed of noise and which are more weighted with speech. Using this knowledge, it is possible to group the utterances by their spectral characteristics similar to conventional acoustic methods; this method would work better in noisy environments.

As an example, the "k" in "kick" has significant frequency content form 500 Hz to 4000 Hz, but a "sh" in "she" only contains significant energy from 1700-4000 Hz. Voiced speech could be classified in a similar manner. For instance, an /i/ ("ee") has significant energy around 300 Hz and 2500 Hz, and an /a/ ("ah") has

energy at around 900 Hz and 1200 Hz This ability to discriminate unvoiced and voiced speech in the presence of noise is, thus, very useful.

Dual omnidirectional microphone array (DOMA)

A dual omnidirectional microphone array (DOMA) that provides improved noise suppression is now described. Compared to conventional arrays and algorithms, which seek to reduce noise by nulling out noise sources, the array of an embodiment is used to form two distinct virtual directional microphones, as described in detail above. The two virtual microphones are configured to have very similar noise responses and very dissimilar speech responses. The only null formed by the DOMA is one used to remove the speech of the user from V_2. The two virtual microphones of an embodiment can be paired with an adaptive filter algorithm and/or VAD algorithm, as described in detail above, to significantly reduce the noise without distorting the speech, significantly improving the SNR of the desired speech over conventional noise suppression systems. The embodiments described herein are stable in operation, flexible with respect to virtual microphone pattern choice, and have proven to be robust with respect to speech source-to-array distance and orientation as well as temperature and calibration techniques.

Unless otherwise specified, the following terms used in describing the DOMA of an embodiment have the corresponding meanings in addition to any meaning or understanding they may convey to one skilled in the art.

The term "bleedthrough" means the undesired presence of noise during speech.

The term "denoising" means removing unwanted noise from Mic1, and also refers to the amount of reduction of noise energy in a signal in decibels (dB).

The term "devoicing" means removing/distorting the desired speech from Mic1.

The term "directional microphone (DM)" means a physical directional microphone that is vented on both sides of the sensing diaphragm.

The term "Mic1 (M1)" means a general designation for an adaptive noise suppression system microphone that usually contains more speech than noise.

The term "Mic2 (M2)" means a general designation for an adaptive noise suppression system microphone that usually contains more noise than speech.

The term "noise" means unwanted environmental acoustic noise.

The term "null" means a zero or minima in the spatial response of a physical or virtual directional microphone.

The term "O_1" means a first physical omnidirectional microphone used to form a microphone array.

The term "O_2" means a second physical omnidirectional microphone used to form a microphone array.

The term "speech" means desired speech of the user.

The term "Skin Surface Microphone (SSM)" is a microphone used in an earpiece (e.g., the Jawbone earpiece available from Aliph of San Francisco, California) to detect speech vibrations on the user's skin.

The term "V_1" means the virtual directional "speech" microphone, which has no nulls.

The term "V_2" means the virtual directional "noise" microphone, which has a null for the user's speech.

The term "Voice Activity Detection (VAD) signal" means a signal indicating when user speech is detected.

The term "virtual microphones (VM)" or "virtual directional microphones" means a microphone constructed using two or more omnidirectional microphones and associated signal processing.

Figure 22 is a two-microphone adaptive noise suppression system 2200, under an embodiment. The two-microphone system 2200 including the combination of physical microphones MIC 1 and MIC 2 along with the processing or circuitry components to which the microphones couple (described in detail below, but not shown in this figure) is referred to herein as the dual omnidirectional microphone array (DOMA) 2210, but the embodiment is not so limited. Referring to Figure 22, in analyzing the single noise source 2201 and the direct path to the microphones, the total acoustic information coming into MIC 1 (2202, which can be an physical or virtual microphone) is denoted by $m_1(n)$. The total acoustic information coming into MIC 2 (2203, which can also be an physical or virtual microphone) is similarly labeled $m_2(n)$.

In the z (digital frequency) domain, these are represented as $M_1(z)$ and $M_2(z)$. Then,

$$M_1(z) = S(z) + N_2(z)$$
$$M_2(z) = N(z) + S_2(z)$$

with

$$N_2(z) = N(z)H_1(z)$$
$$S_2(z) = S(z)H_2(z),$$

so that

$$M_1(z) = S(z) + N(z)H_1(z)$$
$$M_2(z) = N(z) + S(z)H_2(z). \qquad \text{Eq. 1}$$

This is the general case for all two microphone systems. Equation 1 has four unknowns and only two known relationships and therefore cannot be solved explicitly.

However, there is another way to solve for some of the unknowns in Equation 1. The analysis starts with an examination of the case where the speech is not being generated, that is, where a signal from the VAD subsystem 2204 (optional) equals zero. In this case, $s(n) = S(z) = 0$, and Equation 1 reduces to

$$M_{1N}(z) = N(z)H_1(z)$$
$$M_{2N}(z) = N(z),$$

where the N subscript on the M variables indicate that only noise is being received. This leads to

$$M_{1N}(z) = M_{2N}(z)H_1(z)$$
$$H_1(z) = \frac{M_{1N}(z)}{M_{2N}(z)}. \qquad \text{Eq. 2}$$

The function $H_1(z)$ can be calculated using any of the available system identification algorithms and the microphone outputs when the system is certain that only noise is being received. The calculation can be done adaptively, so that the system can react to changes in the noise.

A solution is now available for $H_1(z)$, one of the unknowns in Equation 1. The final unknown, $H_2(z)$, can be determined by using the instances where

speech is being produced and the VAD equals one. When this is occurring, but the recent (perhaps less than 1 second) history of the microphones indicate low levels of noise, it can be assumed that n(s) = N(z) ~ 0. Then Equation 1 reduces to

$$M_{1S}(z)=S(z)$$
$$M_{2S}(z)=S(z)H_2(z),$$

which in turn leads to

$$M_{2S}(z)=M_{1S}(z)H_2(z)$$
$$H_2(z)=\frac{M_{2S}(z)}{M_{1S}(z)},$$

which is the inverse of the $H_1(z)$ calculation. However, it is noted that different inputs are being used (now only the speech is occurring whereas before only the noise was occurring). While calculating $H_2(z)$, the values calculated for $H_1(z)$ are held constant (and vice versa) and it is assumed that the noise level is not high enough to cause errors in the $H_2(z)$ calculation.

After calculating $H_1(z)$ and $H_2(z)$, they are used to remove the noise from the signal. If Equation 1 is rewritten as

$$S(z)=M_1(z)-N(z)H_1(z)$$
$$N(z)=M_2(z)-S(z)H_2(z)$$
$$S(z)=M_1(z)-[M_2(z)-S(z)H_2(z)]H_1(z)$$
$$S(z)[1-H_2(z)H_1(z)]=M_1(z)-M_2(z)H_1(z),$$

then N(z) may be substituted as shown to solve for S(z) as

$$S(z)=\frac{M_1(z)-M_2(z)H_1(z)}{1-H_1(z)H_2(z)}. \qquad \text{Eq. 3}$$

If the transfer functions $H_1(z)$ and $H_2(z)$ can be described with sufficient accuracy, then the noise can be completely removed and the original signal recovered. This remains true without respect to the amplitude or spectral characteristics of the noise. If there is very little or no leakage from the speech source into M_2, then $H_2(z)\approx 0$ and Equation 3 reduces to

$$S(z) \approx M_1(z) - M_2(z)H_1(z). \qquad \text{Eq. 4}$$

Equation 4 is much simpler to implement and is very stable, assuming $H_1(z)$ is stable. However, if significant speech energy is in $M_2(z)$, devoicing can occur. In order to construct a well-performing system and use Equation 4, consideration is given to the following conditions:

R1. Availability of a perfect (or at least very good) VAD in noisy conditions

R2. Sufficiently accurate $H_1(z)$

R3. Very small (ideally zero) $H_2(z)$.

R4. During speech production, $H_1(z)$ cannot change substantially.

R5. During noise, $H_2(z)$ cannot change substantially.

Condition R1 is easy to satisfy if the SNR of the desired speech to the unwanted noise is high enough. "Enough" means different things depending on the method of VAD generation. If a VAD vibration sensor is used, as in Burnett 7,256,048, accurate VAD in very low SNRs (-10 dB or less) is possible. Acoustic–only methods using information from O_1 and O_2 can also return accurate VADs, but are limited to SNRs of ~3 dB or greater for adequate performance.

Condition R5 is normally simple to satisfy because for most applications the microphones will not change position with respect to the user's mouth very often or rapidly. In those applications where it may happen (such as hands-free conferencing systems) it can be satisfied by configuring Mic2 so that $H_2(z) \approx 0$.

Satisfying conditions R2, R3, and R4 are more difficult but are possible given the right combination of V_1 and V_2. Methods are examined below that have proven to be effective in satisfying the above, resulting in excellent noise suppression performance and minimal speech removal and distortion in an embodiment.

The DOMA, in various embodiments, can be used with the Pathfinder system as the adaptive filter system or noise removal. The Pathfinder system,

available from AliphCom, San Francisco, CA, is described in detail in other patents and patent applications referenced herein. Alternatively, any adaptive filter or noise removal algorithm can be used with the DOMA in one or more various alternative embodiments or configurations.

When the DOMA is used with the Pathfinder system, the Pathfinder system generally provides adaptive noise cancellation by combining the two microphone signals (e.g., Mic1, Mic2) by filtering and summing in the time domain. The adaptive filter generally uses the signal received from a first microphone of the DOMA to remove noise from the speech received from at least one other microphone of the DOMA, which relies on a slowly varying linear transfer function between the two microphones for sources of noise. Following processing of the two channels of the DOMA, an output signal is generated in which the noise content is attenuated with respect to the speech content, as described in detail below.

Figure 23 is a generalized two-microphone array (DOMA) including an array 2301/2302 and speech source S configuration, under an embodiment. **Figure 24** is a system 2400 for generating or producing a first order gradient microphone V using two omnidirectional elements O_1 and O_2, under an embodiment. The array of an embodiment includes two physical microphones 2301 and 2302 (e.g., omnidirectional microphones) placed a distance $2d_0$ apart and a speech source 2300 is located a distance d_s away at an angle of θ. This array is axially symmetric (at least in free space), so no other angle is needed. The output from each microphone 2301 and 2302 can be delayed (z_1 and z_2), multiplied by a gain (A_1 and A_2), and then summed with the other as demonstrated in **Figure 24**. The output of the array is or forms at least one virtual microphone, as described in detail below. This operation can be over any frequency range desired. By varying the magnitude and sign of the delays and gains, a wide variety of virtual microphones (VMs), also referred to herein as virtual directional microphones, can be realized. There are other methods known to those skilled in the art for constructing VMs but this is a common one and will be used in the enablement below.

As an example, **Figure 25** is a block diagram for a DOMA 2500 including two physical microphones configured to form two virtual microphones V_1 and V_2, under an embodiment. The DOMA includes two first

order gradient microphones V_1 and V_2 formed using the outputs of two microphones or elements O_1 and O_2 (2301 and 2302), under an embodiment. The DOMA of an embodiment includes two physical microphones 2301 and 2302 that are omnidirectional microphones, as described above with reference to Figures 23 and 24. The output from each microphone is coupled to a processing component 2502, or circuitry, and the processing component outputs signals representing or corresponding to the virtual microphones V_1 and V_2.

In this example system 2500, the output of physical microphone 2301 is coupled to processing component 2502 that includes a first processing path that includes application of a first delay z_{11} and a first gain A_{11} and a second processing path that includes application of a second delay z_{12} and a second gain A_{12}. The output of physical microphone 2302 is coupled to a third processing path of the processing component 2502 that includes application of a third delay z_{21} and a third gain A_{21} and a fourth processing path that includes application of a fourth delay z_{22} and a fourth gain A_{22}. The output of the first and third processing paths is summed to form virtual microphone V_1, and the output of the second and fourth processing paths is summed to form virtual microphone V_2.

As described in detail below, varying the magnitude and sign of the delays and gains of the processing paths leads to a wide variety of virtual microphones (VMs), also referred to herein as virtual directional microphones, can be realized. While the processing component 2502 described in this example includes four processing paths generating two virtual microphones or microphone signals, the embodiment is not so limited. For example, **Figure 26** is a block diagram for a DOMA 2600 including two physical microphones configured to form N virtual microphones V_1 through V_N, where N is any number greater than one, under an embodiment. Thus, the DOMA can include a processing component 2602 having any number of processing paths as appropriate to form a number N of virtual microphones.

The DOMA of an embodiment can be coupled or connected to one or more remote devices. In a system configuration, the DOMA outputs signals to the remote devices. The remote devices include, but are not limited to, at least one of cellular telephones, satellite telephones, portable telephones,

wireline telephones, Internet telephones, wireless transceivers, wireless communication radios, personal digital assistants (PDAs), personal computers (PCs), headset devices, head-worn devices, and earpieces.

Furthermore, the DOMA of an embodiment can be a component or subsystem integrated with a host device. In this system configuration, the DOMA outputs signals to components or subsystems of the host device. The host device includes, but is not limited to, at least one of cellular telephones, satellite telephones, portable telephones, wireline telephones, Internet telephones, wireless transceivers, wireless communication radios, personal digital assistants (PDAs), personal computers (PCs), headset devices, head-worn devices, and earpieces.

As an example, **Figure 27** is an example of a headset or head-worn device 2700 that includes the DOMA, as described herein, under an embodiment. The headset 2700 of an embodiment includes a housing having two areas or receptacles (not shown) that receive and hold two microphones (e.g., O_1 and O_2). The headset 2700 is generally a device that can be worn by a speaker 2702, for example, a headset or earpiece that positions or holds the microphones in the vicinity of the speaker's mouth. The headset 2700 of an embodiment places a first physical microphone (e.g., physical microphone O_1) in a vicinity of a speaker's lips. A second physical microphone (e.g., physical microphone O_2) is placed a distance behind the first physical microphone. The distance of an embodiment is in a range of a few centimeters behind the first physical microphone or as described herein (e.g., described with reference to Figures 22-26). The DOMA is symmetric and is used in the same configuration or manner as a single close-talk microphone, but is not so limited.

Figure 28 is a flow diagram for denoising 2800 acoustic signals using the DOMA, under an embodiment. The denoising 2800 begins by receiving 2802 acoustic signals at a first physical microphone and a second physical microphone. In response to the acoustic signals, a first microphone signal is output from the first physical microphone and a second microphone signal is output from the second physical microphone 2804. A first virtual microphone is formed 2806 by generating a first combination of the first microphone signal and the second microphone signal. A second virtual microphone is formed 2808 by generating a second combination of the first microphone signal and

the second microphone signal, and the second combination is different from the first combination. The first virtual microphone and the second virtual microphone are distinct virtual directional microphones with substantially similar responses to noise and substantially dissimilar responses to speech. The denoising 2800 generates 2810 output signals by combining signals from the first virtual microphone and the second virtual microphone, and the output signals include less acoustic noise than the acoustic signals.

Figure 29 is a flow diagram for forming 2900 the DOMA, under an embodiment. Formation 2900 of the DOMA includes forming 2902 a physical microphone array including a first physical microphone and a second physical microphone. The first physical microphone outputs a first microphone signal and the second physical microphone outputs a second microphone signal. A virtual microphone array is formed 2904 comprising a first virtual microphone and a second virtual microphone. The first virtual microphone comprises a first combination of the first microphone signal and the second microphone signal. The second virtual microphone comprises a second combination of the first microphone signal and the second microphone signal, and the second combination is different from the first combination. The virtual microphone array including a single null oriented in a direction toward a source of speech of a human speaker.

The construction of VMs for the adaptive noise suppression system of an embodiment includes substantially similar noise response in V_1 and V_2. Substantially similar noise response as used herein means that $H_1(z)$ is simple to model and will not change much during speech, satisfying conditions R2 and R4 described above and allowing strong denoising and minimized bleedthrough.

The construction of VMs for the adaptive noise suppression system of an embodiment includes relatively small speech response for V_2. The relatively small speech response for V_2 means that $H_2(z) \approx 0$, which will satisfy conditions R3 and R5 described above.

The construction of VMs for the adaptive noise suppression system of an embodiment further includes sufficient speech response for V_1 so that the

cleaned speech will have significantly higher SNR than the original speech captured by O_1.

The description that follows assumes that the responses of the omnidirectional microphones O_1 and O_2 to an identical acoustic source have been normalized so that they have exactly the same response (amplitude and phase) to that source. This can be accomplished using standard microphone array methods (such as frequency-based calibration) well known to those versed in the art.

Referring to the condition that construction of VMs for the adaptive noise suppression system of an embodiment includes relatively small speech response for V_2, it is seen that for discrete systems $V_2(z)$ can be represented as:

$$V_2(z) = O_2(z) - z^{-\gamma}\beta O_1(z)$$

where

$$\beta = \frac{d_1}{d_2}$$

$$\gamma = \frac{d_2 - d_1}{c} \cdot f_s \quad \text{(samples)}$$

$$d_1 = \sqrt{d_s^2 - 2d_s d_0 \cos(\theta) + d_0^2}$$

$$d_2 = \sqrt{d_s^2 + 2d_s d_0 \cos(\theta) + d_0^2}$$

The distances d_1 and d_2 are the distance from O_1 and O_2 to the speech source (see **Figure 23**), respectively, and γ is their difference divided by *c*, the speed of sound, and multiplied by the sampling frequency f_s. Thus γ is in samples, but need not be an integer. For non-integer γ, fractional-delay filters (well known to those versed in the art) may be used.

It is important to note that the β above is not the conventional β used to denote the mixing of VMs in adaptive beamforming; it is a physical variable of the system that depends on the intra-microphone distance d_0 (which is fixed) and the distance d_s and angle θ, which can vary. As shown below, for properly calibrated microphones, it is not necessary for the system to be programmed with the exact β of the array. Errors of approximately 10-15% in the actual β

(i.e. the β used by the algorithm is not the β of the physical array) have been used with very little degradation in quality. The algorithmic value of β may be calculated and set for a particular user or may be calculated adaptively during speech production when little or no noise is present. However, adaptation during use is not required for nominal performance.

Figure 30 is a plot of linear response of virtual microphone V_2 with β = 0.8 to a 1 kHz speech source at a distance of 0.1 m, under an embodiment. The null in the linear response of virtual microphone V_2 to speech is located at 0 degrees, where the speech is typically expected to be located. **Figure 31** is a plot of linear response of virtual microphone V_2 with β = 0.8 to a 1 kHz noise source at a distance of 1.0 m, under an embodiment. The linear response of V_2 to noise is devoid of or includes no null, meaning all noise sources are detected.

The above formulation for $V_2(z)$ has a null at the speech location and will therefore exhibit minimal response to the speech. This is shown in **Figure 30** for an array with d_0 = 10.7 mm and a speech source on the axis of the array (θ = 0) at 10 cm (β = 0.8). Note that the speech null at zero degrees is not present for noise in the far field for the same microphone, as shown in **Figure 31** with a noise source distance of approximately 1 meter. This insures that noise in front of the user will be detected so that it can be removed. This differs from conventional systems that can have difficulty removing noise in the direction of the mouth of the user.

The $V_1(z)$ can be formulated using the general form for $V_1(z)$:

$$V_1(z) = \alpha_A O_1(z) \cdot z^{-d_A} - \alpha_B O_2(z) \cdot z^{-d_B}$$

Since

$$V_2(z) = O_2(z) - z^{-\gamma} \beta O_1(z)$$

and, since for noise in the forward direction

$$O_{2N}(z) = O_{1N}(z) \cdot z^{-\gamma},$$

then

$$V_{2N}(z) = O_{1N}(z) \cdot z^{-\gamma} - z^{-\gamma}\beta O_{1N}(z)$$
$$V_{2N}(z) = (1-\beta)(O_{1N}(z) \cdot z^{-\gamma})$$

If this is then set equal to $V_1(z)$ above, the result is

$$V_{1N}(z) = \alpha_A O_{1N}(z) \cdot z^{-d_A} - \alpha_B O_{1N}(z) \cdot z^{-\gamma} \cdot z^{-d_B} = (1-\beta)(O_{1N}(z) \cdot z^{-\gamma})$$

thus we may set

$$d_A = \gamma$$
$$d_B = 0$$
$$\alpha_A = 1$$
$$\alpha_B = \beta$$

to get

$$V_1(z) = O_1(z) \cdot z^{-\gamma} - \beta O_2(z)$$

The definitions for V_1 and V_2 above mean that for noise $H_1(z)$ is:

$$H_1(z) = \frac{V_1(z)}{V_2(z)} = \frac{-\beta O_2(z) + O_1(z) \cdot z^{-\gamma}}{O_2(z) - z^{-\gamma}\beta O_1(z)}$$

which, if the amplitude noise responses are about the same, has the form of an allpass filter. This has the advantage of being easily and accurately modeled, especially in magnitude response, satisfying R2.

This formulation assures that the noise response will be as similar as possible and that the speech response will be proportional to $(1-\beta^2)$. Since β is the ratio of the distances from O_1 and O_2 to the speech source, it is affected by the size of the array and the distance from the array to the speech source.

Figure 32 is a plot of linear response of virtual microphone V_1 with β = 0.8 to a 1 kHz speech source at a distance of 0.1 m, under an embodiment. The linear response of virtual microphone V_1 to speech is devoid of or includes no null and the response for speech is greater than that shown in Figure 25.

Figure 33 is a plot of linear response of virtual microphone V_1 with β = 0.8 to a 1 kHz noise source at a distance of 1.0 m, under an embodiment. The linear response of virtual microphone V_1 to noise is devoid of or includes no null and the response is very similar to V_2 shown in Figure 26.

Figure 34 is a plot of linear response of virtual microphone V_1 with β = 0.8 to a speech source at a distance of 0.1 m for frequencies of 100, 500, 1000, 2000, 3000, and 4000 Hz, under an embodiment. **Figure 35** is a plot showing comparison of frequency responses for speech for the array of an embodiment and for a conventional cardioid microphone.

The response of V_1 to speech is shown in **Figure 32**, and the response to noise in **Figure 33**. Note the difference in speech response compared to V_2 shown in **Figure 30** and the similarity of noise response shown in **Figure 31**. Also note that the orientation of the speech response for V_1 shown in **Figure 32** is completely opposite the orientation of conventional systems, where the main lobe of response is normally oriented toward the speech source. The orientation of an embodiment, in which the main lobe of the speech response of V_1 is oriented away from the speech source, means that the speech sensitivity of V_1 is lower than a normal directional microphone but is flat for all frequencies within approximately +-30 degrees of the axis of the array, as shown in **Figure 34**. This flatness of response for speech means that no shaping postfilter is needed to restore omnidirectional frequency response. This does come at a price - as shown in **Figure 35**, which shows the speech response of V_1 with β = 0.8 and the speech response of a cardioid microphone. The speech response of V_1 is approximately 0 to ~13 dB less than a normal directional microphone between approximately 500 and 7500 Hz and approximately 0 to 10+ dB greater than a directional microphone below approximately 500 Hz and above 7500 Hz for a sampling frequency of approximately 16000 Hz. However, the superior noise suppression made possible using this system more than compensates for the initially poorer SNR.

It should be noted that **Figures 30-33** assume the speech is located at approximately 0 degrees and approximately 10 cm, β = 0.8, and the noise at all angles is located approximately 1.0 meter away from the midpoint of the array. Generally, the noise distance is not required to be 1 m or more, but the denoising is the best for those distances. For distances less than

approximately 1 m, denoising will not be as effective due to the greater dissimilarity in the noise responses of V_1 and V_2. This has not proven to be an impediment in practical use – in fact, it can be seen as a feature. Any "noise" source that is ~10 cm away from the earpiece is likely to be desired to be captured and transmitted.

The speech null of V_2 means that the VAD signal is no longer a critical component. The VAD's purpose was to ensure that the system would not train on speech and then subsequently remove it, resulting in speech distortion. If, however, V_2 contains no speech, the adaptive system cannot train on the speech and cannot remove it. As a result, the system can denoise all the time without fear of devoicing, and the resulting clean audio can then be used to generate a VAD signal for use in subsequent single-channel noise suppression algorithms such as spectral subtraction. In addition, constraints on the absolute value of $H_1(z)$ (i.e. restricting it to absolute values less than two) can keep the system from fully training on speech even if it is detected. In reality, though, speech can be present due to a mis-located V_2 null and/or echoes or other phenomena, and a VAD sensor or other acoustic-only VAD is recommended to minimize speech distortion.

Depending on the application, β and γ may be fixed in the noise suppression algorithm or they can be estimated when the algorithm indicates that speech production is taking place in the presence of little or no noise. In either case, there may be an error in the estimate of the actual β and γ of the system. The following description examines these errors and their effect on the performance of the system. As above, "good performance" of the system indicates that there is sufficient denoising and minimal devoicing.

The effect of an incorrect β and γ on the response of V_1 and V_2 can be seen by examining the definitions above:

$$V_1(z) = O_1(z) \cdot z^{-\gamma_T} - \beta_T O_2(z)$$
$$V_2(z) = O_2(z) - z^{-\gamma_T} \beta_T O_1(z)$$

where β_T and γ_T denote the theoretical estimates of β and γ used in the noise suppression algorithm. In reality, the speech response of O_2 is

$$O_{2S}(z)=\beta_R O_{1S}(z)\cdot z^{-\gamma_R}$$

where β_R and γ_R denote the real β and γ of the physical system. The differences between the theoretical and actual values of β and γ can be due to mis-location of the speech source (it is not where it is assumed to be) and/or a change in air temperature (which changes the speed of sound). Inserting the actual response of O_2 for speech into the above equations for V_1 and V_2 yields

$$\begin{aligned} V_{1S}(z)&=O_{1S}(z)\left[z^{-\gamma_T}-\beta_T\beta_R z^{-\gamma_R}\right] \\ V_{2S}(z)&=O_{1S}(z)\left[\beta_R z^{-\gamma_R}-\beta_T z^{-\gamma_T}\right] \end{aligned}$$

If the difference in phase is represented by

$$\gamma_R=\gamma_T+\gamma_D$$

And the difference in amplitude as

$$\beta_R=B\beta_T$$

then

$$\begin{aligned} V_{1S}(z)&=O_{1S}(z)z^{-\gamma_T}\left[1-B\beta_T^2 z^{-\gamma_D}\right] \\ V_{2S}(z)&=\beta_T O_{1S}(z)z^{-\gamma_T}\left[Bz^{-\gamma_D}-1\right] \end{aligned} \qquad \text{Eq. 5}$$

The speech cancellation in V_2 (which directly affects the degree of devoicing) and the speech response of V_1 will be dependent on both B and D. An examination of the case where D = 0 follows. **Figure 36** is a plot showing speech response for V_1 (top, dashed) and V_2 (bottom, solid) versus B with d_s assumed to be 0.1 m, under an embodiment. This plot shows the spatial null in V_2 to be relatively broad. **Figure 37** is a plot showing a ratio of V_1/V_2 speech responses shown in **Figure 31** versus B, under an embodiment. The ratio of V_1/V_2 is above 10 dB for all $0.8 < B < 1.1$, and this means that the physical β of the system need not be exactly modeled for good performance. **Figure 38** is a plot of B versus actual d_s assuming that d_s = 10 cm and theta = 0, under an embodiment. **Figure 39** is a plot of B versus theta with d_s = 10 cm and assuming d_s = 10 cm, under an embodiment.

In **Figure 36**, the speech response for V_1 (upper, dashed) and V_2 (lower, solid) compared to O_1 is shown versus B when d_s is thought to be approximately 10 cm and $\theta = 0$. When B = 1, the speech is absent from V_2. In **Figure 37**, the ratio of the speech responses in **Figure 31** is shown. When $0.8 < B < 1.1$, the V_1/V_2 ratio is above approximately 10 dB – enough for good performance. Clearly, if D = 0, B can vary significantly without adversely affecting the performance of the system. Again, this assumes that calibration of the microphones so that both their amplitude and phase response is the same for an identical source has been performed.

The B factor can be non-unity for a variety of reasons. Either the distance to the speech source or the relative orientation of the array axis and the speech source or both can be different than expected. If both distance and angle mismatches are included for B, then

$$B = \frac{\beta_R}{\beta_T} \frac{\sqrt{d_{SR}^2 - 2d_{SR}d_0\cos(\theta_R) + d_0^2}}{\sqrt{d_{SR}^2 + 2d_{SR}d_0\cos(\theta_R) + d_0^2}} \cdot \frac{\sqrt{d_{ST}^2 + 2d_{ST}d_0\cos(\theta_T) + d_0^2}}{\sqrt{d_{ST}^2 - 2d_{ST}d_0\cos(\theta_T) + d_0^2}}$$

where again the T subscripts indicate the theorized values and R the actual values. In **Figure 38**, the factor B is plotted with respect to the actual d_s with the assumption that d_s = 10 cm and $\theta = 0$. So, if the speech source in on-axis of the array, the actual distance can vary from approximately 5 cm to 18 cm without significantly affecting performance – a significant amount. Similarly, **Figure 39** shows what happens if the speech source is located at a distance of approximately 10 cm but not on the axis of the array. In this case, the angle can vary up to approximately +-55 degrees and still result in a B less than 1.1, assuring good performance. This is a significant amount of allowable angular deviation. If there is both angular and distance errors, the equation above may be used to determine if the deviations will result in adequate performance. Of course, if the value for β_T is allowed to update during speech, essentially tracking the speech source, then B can be kept near unity for almost all configurations.

An examination follows of the case where B is unity but D is nonzero. This can happen if the speech source is not where it is thought to be or if the

speed of sound is different from what it is believed to be. From Equation 5 above, it can be sees that the factor that weakens the speech null in V_2 for speech is

$$N(z) = Bz^{-\gamma D} - 1$$

or in the continuous s domain

$$N(s) = Be^{-Ds} - 1.$$

Since γ is the time difference between arrival of speech at V_1 compared to V_2, it can be errors in estimation of the angular location of the speech source with respect to the axis of the array and/or by temperature changes. Examining the temperature sensitivity, the speed of sound varies with temperature as

$$c = 331.3 + (0.606T) \text{ m/s}$$

where T is degrees Celsius. As the temperature decreases, the speed of sound also decreases. Setting 20 C as a design temperature and a maximum expected temperature range to -40 C to +60 C (-40 F to 140 F). The design speed of sound at 20 C is 343 m/s and the slowest speed of sound will be 307 m/s at -40 C with the fastest speed of sound 362 m/s at 60 C. Set the array length ($2d_0$) to be 21 mm. For speech sources on the axis of the array, the difference in travel time for the largest change in the speed of sound is

$$\nabla t_{MAX} = \frac{d}{c_1} - \frac{d}{c_2} = 0.021\,\text{m}\left(\frac{1}{343\,\text{m/s}} - \frac{1}{307\,\text{m/s}}\right) = -7.2 \times 10^{-6} \text{ sec}$$

or approximately 7 microseconds. The response for N(s) given B = 1 and D = 7.2 μsec is shown in **Figure 40**. **Figure 40** is a plot of amplitude (top) and phase (bottom) response of N(s) with B = 1 and D = -7.2 μsec, under an embodiment. The resulting phase difference clearly affects high frequencies more than low. The amplitude response is less than approximately -10 dB for all frequencies less than 7 kHz and is only about -9 dB at 8 kHz. Therefore, assuming B = 1, this system would likely perform well at frequencies up to approximately 8 kHz. This means that a properly compensated system would

work well even up to 8 kHz in an exceptionally wide (e.g., -40 C to 80 C) temperature range. Note that the phase mismatch due to the delay estimation error causes N(s) to be much larger at high frequencies compared to low.

If B is not unity, the robustness of the system is reduced since the effect from non-unity B is cumulative with that of non-zero D. **Figure 41** shows the amplitude and phase response for B = 1.2 and D = 7.2 μsec. **Figure 41** is a plot of amplitude (top) and phase (bottom) response of N(s) with B = 1.2 and D = -7.2 μsec, under an embodiment. Non-unity B affects the entire frequency range. Now N(s) is below approximately -10 dB only for frequencies less than approximately 5 kHz and the response at low frequencies is much larger. Such a system would still perform well below 5 kHz and would only suffer from slightly elevated devoicing for frequencies above 5 kHz. For ultimate performance, a temperature sensor may be integrated into the system to allow the algorithm to adjust γ_T as the temperature varies.

Another way in which D can be non-zero is when the speech source is not where it is believed to be – specifically, the angle from the axis of the array to the speech source is incorrect. The distance to the source may be incorrect as well, but that introduces an error in B, not D.

Referring to **Figure 23**, it can be seen that for two speech sources (each with their own d_s and θ) that the time difference between the arrival of the speech at O_1 and the arrival at O_2 is

$$\Delta t = \frac{1}{c}\left(d_{12} - d_{11} - d_{22} + d_{21}\right)$$

where

$$d_{11} = \sqrt{d_{S1}^2 - 2d_{S1}d_0\cos(\theta_1) + d_0^2}$$
$$d_{12} = \sqrt{d_{S1}^2 + 2d_{S1}d_0\cos(\theta_1) + d_0^2}$$
$$d_{21} = \sqrt{d_{S2}^2 - 2d_{S2}d_0\cos(\theta_2) + d_0^2}$$
$$d_{22} = \sqrt{d_{S2}^2 + 2d_{S2}d_0\cos(\theta_2) + d_0^2}$$

The V_2 speech cancellation response for θ_1 = 0 degrees and θ_2 = 30 degrees and assuming that B = 1 is shown in **Figure 42**. **Figure 42** is a plot of amplitude (top) and phase (bottom) response of the effect on the speech

cancellation in V_2 due to a mistake in the location of the speech source with q1 = 0 degrees and q2 = 30 degrees, under an embodiment. Note that the cancellation is still below -10 dB for frequencies below 6 kHz. The cancellation is still below approximately -10 dB for frequencies below approximately 6 kHz, so an error of this type will not significantly affect the performance of the system. However, if θ_2 is increased to approximately 45 degrees, as shown in **Figure 43**, the cancellation is below approximately -10 dB only for frequencies below approximately 2.8 kHz. **Figure 43** is a plot of amplitude (top) and phase (bottom) response of the effect on the speech cancellation in V_2 due to a mistake in the location of the speech source with q1 = 0 degrees and q2 = 45 degrees, under an embodiment. Now the cancellation is below -10 dB only for frequencies below about 2.8 kHz and a reduction in performance is expected. The poor V_2 speech cancellation above approximately 4 kHz may result in significant devoicing for those frequencies.

The description above has assumed that the microphones O_1 and O_2 were calibrated so that their response to a source located the same distance away was identical for both amplitude and phase. This is not always feasible, so a more practical calibration procedure is presented below. It is not as accurate, but is much simpler to implement. Begin by defining a filter $\alpha(z)$ such that:

$$O_{1C}(z) = \alpha(z) O_{2C}(z)$$

where the "C" subscript indicates the use of a known calibration source. The simplest one to use is the speech of the user. Then

$$O_{1S}(z) = \alpha(z) O_{2C}(z)$$

The microphone definitions are now:

$$V_1(z) = O_1(z) \cdot z^{-\gamma} - \beta(z)\alpha(z)O_2(z)$$
$$V_2(z) = \alpha(z)O_2(z) - z^{-\gamma}\beta(z)O_1(z)$$

The β of the system should be fixed and as close to the real value as possible. In practice, the system is not sensitive to changes in β and errors of approximately +-5% are easily tolerated. During times when the user is producing speech but there is little or no noise, the system can train $\alpha(z)$ to remove as much speech as possible. This is accomplished by:

1. Construct an adaptive system as shown in **Figure 22** with $\beta O_{1S}(z)z^{-\gamma}$ in the "MIC1" position, $O_{2S}(z)$ in the "MIC2" position, and $\alpha(z)$ in the $H_1(z)$ position.
2. During speech, adapt $\alpha(z)$ to minimize the residual of the system.
3. Construct $V_1(z)$ and $V_2(z)$ as above.

A simple adaptive filter can be used for $\alpha(z)$ so that only the relationship between the microphones is well modeled. The system of an embodiment trains only when speech is being produced by the user. A sensor like the SSM is invaluable in determining when speech is being produced in the absence of noise. If the speech source is fixed in position and will not vary significantly during use (such as when the array is on an earpiece), the adaptation should be infrequent and slow to update in order to minimize any errors introduced by noise present during training.

The above formulation works very well because the noise (far-field) responses of V_1 and V_2 are very similar while the speech (near-field) responses are very different. However, the formulations for V_1 and V_2 can be varied and still result in good performance of the system as a whole. If the definitions for V_1 and V_2 are taken from above and new variables B1 and B2 are inserted, the result is:

$$V_1(z) = O_1(z) \cdot z^{-\gamma_1} - B_1 \beta_T O_2(z)$$
$$V_2(z) = O_2(z) - z^{-\gamma_1} B_2 \beta_T O_1(z)$$

where B1 and B2 are both positive numbers or zero. If B1 and B2 are set equal to unity, the optimal system results as described above. If B1 is allowed to vary from unity, the response of V_1 is affected. An examination of the case

where B2 is left at 1 and B1 is decreased follows. As B1 drops to approximately zero, V_1 becomes less and less directional, until it becomes a simple omnidirectional microphone when B1 = 0. Since B2 = 1, a speech null remains in V_2, so very different speech responses remain for V_1 and V_2. However, the noise responses are much less similar, so denoising will not be as effective. Practically, though, the system still performs well. B1 can also be increased from unity and once again the system will still denoise well, just not as well as with B1 = 1.

If B2 is allowed to vary, the speech null in V_2 is affected. As long as the speech null is still sufficiently deep, the system will still perform well. Practically values down to approximately B2 = 0.6 have shown sufficient performance, but it is recommended to set B2 close to unity for optimal performance.

Similarly, variables ε and Δ may be introduced so that:

$$V_1(z)=(\varepsilon-\beta)O_{2N}(z)+(1+\Delta)O_{1N}(z)z^{-\gamma}$$

$$V_2(z)=(1+\Delta)O_{2N}(z)+(\varepsilon-\beta)O_{1N}(z)z^{-\gamma}$$

This formulation also allows the virtual microphone responses to be varied but retains the all-pass characteristic of $H_1(z)$.

In conclusion, the system is flexible enough to operate well at a variety of B1 values, but B2 values should be close to unity to limit devoicing for best performance.

Experimental results for a $2d_0$ = 19 mm array using a linear β of 0.83 and B1 = B2 = 1 on a Bruel and Kjaer Head and Torso Simulator (HATS) in very loud (~85 dBA) music/speech noise environment are shown in **Figure 44**. The alternate microphone calibration technique discussed above was used to calibrate the microphones. The noise has been reduced by about 25 dB and the speech hardly affected, with no noticeable distortion. Clearly the technique significantly increases the SNR of the original speech, far outperforming conventional noise suppression techniques.

Embodiments described herein include a method comprising: forming a first virtual microphone by combining a first signal of a first physical microphone and a second signal of a second physical

microphone; forming a filter that describes a relationship for speech between the first physical microphone and the second physical microphone; forming a second virtual microphone by applying the filter to the first signal to generate a first intermediate signal, and summing the first intermediate signal and the second signal; generating an energy ratio of energies of the first virtual microphone and the second virtual microphone; and detecting acoustic voice activity of a speaker when the energy ratio is greater than a threshold value.

The first virtual microphone and the second virtual microphone of an embodiment are distinct virtual directional microphones.

The first virtual microphone and the second virtual microphone of an embodiment have approximately similar responses to noise.

The first virtual microphone and the second virtual microphone of an embodiment have approximately dissimilar responses to speech.

The method of an embodiment comprises applying a calibration to at least one of the first signal and the second signal.

The calibration of an embodiment compensates a second response of the second physical microphone so that the second response is equivalent to a first response of the first physical microphone.

The method of an embodiment comprises applying a delay to the first intermediate signal.

The delay of an embodiment is proportional to a time difference between arrival of the speech at the second physical microphone and arrival of the speech at the first physical microphone.

The forming of the first virtual microphone of an embodiment comprises applying the filter to the second signal.

The forming of the first virtual microphone of an embodiment comprises applying the calibration to the second signal.

The forming of the first virtual microphone of an embodiment comprises applying the delay to the first signal.

The forming of the first virtual microphone by the combining of an embodiment comprises subtracting the second signal from the first signal.

The filter of an embodiment is an adaptive filter.

The method of an embodiment comprises adapting the filter to minimize a second virtual microphone output when only speech is being received by the first physical microphone and the second physical microphone.

The adapting of an embodiment comprises applying a least-mean squares process.

The method of an embodiment comprises generating coefficients of the filter during a period when only speech is being received by the first physical microphone and the second physical microphone.

The forming of the filter of an embodiment comprises generating a first quantity by applying a calibration to the second signal. The forming of the filter of an embodiment comprises generating a second quantity by applying the delay to the first signal. The forming of the filter of an embodiment comprises forming the filter as a ratio of the first quantity to the second quantity.

The generating of the energy ratio of an embodiment comprises generating the energy ratio for a frequency band.

The generating of the energy ratio of an embodiment comprises generating the energy ratio for a frequency subband.

The frequency subband of an embodiment includes frequencies higher than approximately 200 Hertz (Hz).

The frequency subband of an embodiment includes frequencies in a range from approximately 250 Hz to 1250 Hz.

The frequency subband of an embodiment includes frequencies in a range from approximately 200 Hz to 3000 Hz.

The filter of an embodiment is a static filter.

The forming of the filter of an embodiment comprises determining a first distance as distance between the first physical microphone and a mouth of the speaker. The forming of the filter of an embodiment comprises determining a second distance as distance between the second physical microphone and the mouth. The forming of the filter of an embodiment comprises forming a ratio of the first distance to the second distance.

The method of an embodiment comprises generating a vector of the energy ratio versus time.

The first and second physical microphones of an embodiment are omnidirectional microphones.

The method of an embodiment comprises positioning the first physical microphone and the second physical microphone along an axis and separating the first physical microphone and the second physical microphone by a first distance.

A midpoint of the axis of an embodiment is a second distance from a mouth of the speaker, wherein the mouth is located in a direction defined by an angle relative to the midpoint.

Embodiments described herein include a method comprising: forming a first virtual microphone; forming a filter by generating a first quantity by applying a calibration to a second signal of a second physical microphone, generating a second quantity by applying the delay to a first signal of a first physical microphone, and forming the filter as a ratio of the first quantity to the second quantity; forming a second virtual microphone by applying the filter to the first signal to generate a first intermediate signal, and summing the first intermediate signal and the second signal; and generating a ratio of energies of the first virtual microphone and the second virtual microphone and detecting acoustic voice activity using the ratio.

The first virtual microphone and the second virtual microphone of an embodiment have approximately similar responses to noise and approximately dissimilar responses to speech.

The method of an embodiment comprises applying a calibration to at least one of the first signal and the second signal, wherein the calibration compensates a second response of the second physical microphone so that the second response is equivalent to a first response of the first physical microphone.

The method of an embodiment comprises applying a delay to the first intermediate signal, wherein the delay is proportional to a time difference between arrival of the speech at the second physical microphone and arrival of the speech at the first physical microphone.

The forming of the first virtual microphone of an embodiment comprises applying the filter to the second signal.

The forming of the first virtual microphone of an embodiment comprises applying the calibration to the second signal.

The forming of the first virtual microphone of an embodiment comprises applying the delay to the first signal.

The forming of the first virtual microphone by the combining of an embodiment comprises subtracting the second signal from the first signal.

The filter of an embodiment is an adaptive filter.

The method of an embodiment comprises adapting the filter to minimize a second virtual microphone output when only speech is being received by the first physical microphone and the second physical microphone.

The adapting of an embodiment comprises applying a least-mean squares process.

The method of an embodiment comprises generating coefficients of the filter during a period when only speech is being received by the first physical microphone and the second physical microphone.

The generating of the ratio of an embodiment comprises generating the ratio for a frequency band.

The generating of the ratio of an embodiment comprises generating the ratio for a frequency subband.

The method of an embodiment comprises generating a vector of the ratio versus time.

Embodiments described herein include a method comprising: forming a first virtual microphone by generating a first combination of a first signal and a second signal, wherein the first signal is received from a first physical microphone and the second signal is received from a second physical microphone; forming a filter by generating a first quantity by applying a calibration to at least one of the first signal and the second signal, generating a second quantity by applying a delay to the first signal, and forming the filter as a ratio of the first quantity to the second quantity; and forming a second virtual microphone by applying the filter to the first signal to generate a first intermediate signal and summing the first intermediate signal and the second signal; and determining a presence of acoustic voice activity of a speaker when an energy ratio of energies of the first virtual microphone and the second virtual microphone is greater than a threshold value.

Embodiments described herein include an acoustic voice activity detection system comprising: a first virtual microphone comprising a first combination of a first signal and a second signal, wherein the first signal is received from a first physical microphone and the second signal is received from a second physical microphone; a filter, wherein the filter is formed by generating a first quantity by applying a calibration to at least one of the first signal and the second signal, generating a second quantity by applying a delay to the first signal, and forming the filter as a ratio of the first quantity to the second quantity; and a second virtual microphone formed by applying the filter to the first signal to generate a first intermediate signal and summing the first intermediate

signal and the second signal, wherein acoustic voice activity of a speaker is determined to be present when an energy ratio of energies of the first virtual microphone and the second virtual microphone is greater than a threshold value.

The first virtual microphone and the second virtual microphone of an embodiment have approximately similar responses to noise and approximately dissimilar responses to speech.

A calibration is applied to the second signal of an embodiment, wherein the calibration compensates a second response of the second physical microphone so that the second response is equivalent to a first response of the first physical microphone.

The delay is applied to the first intermediate signal of an embodiment, wherein the delay is proportional to a time difference between arrival of the speech at the second physical microphone and arrival of the speech at the first physical microphone.

The first virtual microphone of an embodiment is formed by applying the filter to the second signal.

The first virtual microphone of an embodiment is formed by applying the calibration to the second signal.

The first virtual microphone of an embodiment is formed by applying the delay to the first signal.

The first virtual microphone of an embodiment is formed by subtracting the second signal from the first signal.

The filter of an embodiment is an adaptive filter.

The filter of an embodiment is adapted to minimize a second virtual microphone output when only speech is being received by the first physical microphone and the second physical microphone.

Coefficients of the filter of an embodiment are generated during a period when only speech is being received by the first physical microphone and the second physical microphone.

The energy ratio of an embodiment comprises an energy ratio for a frequency band.

The energy ratio of an embodiment comprises an energy ratio for a frequency subband.

Embodiments described herein include a device comprising: a first physical microphone generating a first signal; a second physical microphone generating a second signal; and a processing component coupled to the first physical microphone and the second physical microphone, the processing component forming a first virtual microphone, the processing component forming a filter that describes a relationship for speech between the first physical microphone and the second physical microphone, the processing component forming a second virtual microphone by applying the filter to the first signal to generate a first intermediate signal, and summing the first intermediate signal and the second signal, the processing component detecting acoustic voice activity of a speaker when an energy ratio of energies of the first virtual microphone and the second virtual microphone is greater than a threshold value.

The device of an embodiment comprises applying a calibration to at least one of the first signal and the second signal.

The calibration of an embodiment compensates a second response of the second physical microphone so that the second response is equivalent to a first response of the first physical microphone.

The device of an embodiment comprises applying a delay to the first intermediate signal.

The delay of an embodiment is proportional to a time difference between arrival of the speech at the second physical microphone and arrival of the speech at the first physical microphone.

The forming of the first virtual microphone of an embodiment comprises applying the filter to the second signal.

The forming of the first virtual microphone of an embodiment comprises applying the calibration to the second signal.

The forming of the first virtual microphone of an embodiment comprises applying the delay to the first signal.

The forming of the first virtual microphone by the combining of an embodiment comprises subtracting the second signal from the first signal.

The filter of an embodiment is an adaptive filter.

The device of an embodiment comprises adapting the filter to minimize a second virtual microphone output when only speech is being received by the first physical microphone and the second physical microphone.

The adapting of an embodiment comprises applying a least-mean squares process.

The device of an embodiment comprises generating coefficients of the filter during a period when only speech is being received by the first physical microphone and the second physical microphone.

The forming of the filter of an embodiment comprises generating a first quantity by applying a calibration to the second signal. The forming of the filter of an embodiment comprises generating a second quantity by applying the delay to the first signal. The forming of the filter of an embodiment comprises forming the filter as a ratio of the first quantity to the second quantity.

The generating of the energy ratio of an embodiment comprises generating the energy ratio for a frequency band.

The generating of the energy ratio of an embodiment comprises generating the energy ratio for a frequency subband.

The frequency subband of an embodiment includes frequencies higher than approximately 200 Hertz (Hz).

The frequency subband of an embodiment includes frequencies in a range from approximately 250 Hz to 1250 Hz.

The frequency subband of an embodiment includes frequencies in a range from approximately 200 Hz to 3000 Hz.

The filter of an embodiment is a static filter.

The forming of the filter of an embodiment comprises determining a first distance as distance between the first physical microphone and a mouth of the speaker. The forming of the filter of an embodiment comprises determining a second distance as distance between the second physical microphone and the mouth. The forming of the filter of an embodiment comprises forming a ratio of the first distance to the second distance.

The device of an embodiment comprises generating a vector of the energy ratio versus time.

The first virtual microphone and the second virtual microphone of an embodiment are distinct virtual directional microphones.

The first virtual microphone and the second virtual microphone of an embodiment have approximately similar responses to noise.

The first virtual microphone and the second virtual microphone of an embodiment have approximately dissimilar responses to speech.

The first and second physical microphones of an embodiment are omnidirectional microphones.

The device of an embodiment comprises positioning the first physical microphone and the second physical microphone along an axis and separating the first physical microphone and the second physical microphone by a first distance.

A midpoint of the axis of an embodiment is a second distance from a mouth of the speaker, wherein the mouth is located in a direction defined by an angle relative to the midpoint.

Embodiments described herein include a device comprising: a headset including at least one loudspeaker, wherein the headset attaches to a region of a human head; a microphone array connected to the headset, the microphone array including a first physical microphone

outputting a first signal and a second physical microphone outputting a second signal; and a processing component coupled to the first physical microphone and the second physical microphone, the processing component forming a first virtual microphone, the processing component forming a filter that describes a relationship for speech between the first physical microphone and the second physical microphone, the processing component forming a second virtual microphone by applying the filter to the first signal to generate a first intermediate signal, and summing the first intermediate signal and the second signal, the processing component detecting acoustic voice activity of a speaker when an energy ratio of energies of the first virtual microphone and the second virtual microphone is greater than a threshold value.

The AVAD can be a component of a single system, multiple systems, and/or geographically separate systems. The AVAD can also be a subcomponent or subsystem of a single system, multiple systems, and/or geographically separate systems. The AVAD can be coupled to one or more other components (not shown) of a host system or a system coupled to the host system.

One or more components of the AVAD and/or a corresponding system or application to which the AVAD is coupled or connected includes and/or runs under and/or in association with a processing system. The processing system includes any collection of processor-based devices or computing devices operating together, or components of processing systems or devices, as is known in the art. For example, the processing system can include one or more of a portable computer, portable communication device operating in a communication network, and/or a network server. The portable computer can be any of a number and/or combination of devices selected from among personal computers, cellular telephones, personal digital assistants, portable computing devices, and portable communication devices, but is not so limited. The processing system can include components within a larger computer system.

Aspects of the AVAD and corresponding systems and methods described herein may be implemented as functionality programmed into any of a variety of circuitry, including programmable logic devices (PLDs), such as field programmable gate arrays (FPGAs), programmable array logic (PAL) devices, electrically programmable logic and memory devices and standard cell-based devices, as well as application specific integrated circuits (ASICs). Some other possibilities for implementing aspects of the AVAD and corresponding systems and methods include: microcontrollers with memory (such as electronically erasable programmable read only memory (EEPROM)), embedded microprocessors, firmware, software, etc. Furthermore, aspects of the AVAD and corresponding systems and methods may be embodied in microprocessors having software-based circuit emulation, discrete logic (sequential and combinatorial), custom devices, fuzzy (neural) logic, quantum devices, and hybrids of any of the above device types. Of course the underlying device technologies may be provided in a variety of component types, e.g., metal-oxide semiconductor field-effect transistor (MOSFET) technologies like complementary metal-oxide semiconductor (CMOS), bipolar technologies like emitter-coupled logic (ECL), polymer technologies (e.g., silicon-conjugated polymer and metal-conjugated polymer-metal structures), mixed analog and digital, etc.

It should be noted that any system, method, and/or other components disclosed herein may be described using computer aided design tools and expressed (or represented), as data and/or instructions embodied in various computer-readable media, in terms of their behavioral, register transfer, logic component, transistor, layout geometries, and/or other characteristics. Computer-readable media in which such formatted data and/or instructions may be embodied include, but are not limited to, non-volatile storage media in various forms (e.g., optical, magnetic or semiconductor storage media) and carrier waves that may be used to transfer such formatted data and/or instructions through wireless, optical, or wired signaling media or any combination thereof. Examples of transfers of such formatted data and/or instructions by carrier waves include, but are not limited to, transfers (uploads, downloads, e-mail, etc.) over the Internet and/or other computer networks via one or more data transfer protocols (e.g., HTTP, FTP, SMTP,

etc.). When received within a computer system via one or more computer-readable media, such data and/or instruction-based expressions of the above described components may be processed by a processing entity (e.g., one or more processors) within the computer system in conjunction with execution of one or more other computer programs.

Unless the context clearly requires otherwise, throughout the description and the claims, the words "comprise," "comprising," and the like are to be construed in an inclusive sense as opposed to an exclusive or exhaustive sense; that is to say, in a sense of "including, but not limited to." Words using the singular or plural number also include the plural or singular number respectively. Additionally, the words "herein," "hereunder," "above," "below," and words of similar import, when used in this application, refer to this application as a whole and not to any particular portions of this application. When the word "or" is used in reference to a list of two or more items, that word covers all of the following interpretations of the word: any of the items in the list, all of the items in the list and any combination of the items in the list.

The above description of embodiments of the AVAD and corresponding systems and methods is not intended to be exhaustive or to limit the systems and methods to the precise forms disclosed. While specific embodiments of, and examples for, the AVAD and corresponding systems and methods are described herein for illustrative purposes, various equivalent modifications are possible within the scope of the systems and methods, as those skilled in the relevant art will recognize. The teachings of the AVAD and corresponding systems and methods provided herein can be applied to other systems and methods, not only for the systems and methods described above.

The elements and acts of the various embodiments described above can be combined to provide further embodiments. These and other changes can be made to the AVAD and corresponding systems and methods in light of the above detailed description.

In general, in the following claims, the terms used should not be construed to limit the AVAD and corresponding systems and methods to the specific embodiments disclosed in the specification and the claims, but should be construed to include all systems that operate under the claims.

Accordingly, the AVAD and corresponding systems and methods is not limited by the disclosure, but instead the scope is to be determined entirely by the claims.

While certain aspects of the AVAD and corresponding systems and methods are presented below in certain claim forms, the inventors contemplate the various aspects of the AVAD and corresponding systems and methods in any number of claim forms. Accordingly, the inventors reserve the right to add additional claims after filing the application to pursue such additional claim forms for other aspects of the AVAD and corresponding systems and methods.

CLAIMS

What is claimed is:

1. A method comprising:

forming a first virtual microphone by combining a first signal of a first physical microphone and a second signal of a second physical microphone;

forming a filter that describes a relationship for speech between the first physical microphone and the second physical microphone;

forming a second virtual microphone by applying the filter to the first signal to generate a first intermediate signal, and summing the first intermediate signal and the second signal;

generating an energy ratio of energies of the first virtual microphone and the second virtual microphone; and

detecting acoustic voice activity of a speaker when the energy ratio is greater than a threshold value.

2. The method of claim 1, wherein the first virtual microphone and the second virtual microphone are distinct virtual directional microphones.

3. The method of claim 2, wherein the first virtual microphone and the second virtual microphone have approximately similar responses to noise.

4. The method of claim 3, wherein the first virtual microphone and the second virtual microphone have approximately dissimilar responses to speech.

5. The method of claim 1, comprising applying a calibration to at least one of the first signal and the second signal.

6. The method of claim 5, wherein the calibration compensates a second response of the second physical microphone so that the second response is equivalent to a first response of the first physical microphone.

7. The method of claim 5, comprising applying a delay to the first intermediate signal.

8. The method of claim 7, wherein the delay is proportional to a time difference between arrival of the speech at the second physical microphone and arrival of the speech at the first physical microphone.

9. The method of claim 8, wherein the forming of the first virtual microphone comprises applying the filter to the second signal.

10. The method of claim 9, wherein the forming of the first virtual microphone comprises applying the calibration to the second signal.

11. The method of claim 10, wherein the forming of the first virtual microphone comprises applying the delay to the first signal.

12. The method of claim 11, wherein the forming of the first virtual microphone by the combining comprises subtracting the second signal from the first signal.

13. The method of claim 12, wherein the filter is an adaptive filter.

14. The method of claim 13, comprising adapting the filter to minimize a second virtual microphone output when only speech is being received by the first physical microphone and the second physical microphone.

15. The method of claim 13, wherein the adapting comprises applying a least-mean squares process.

16. The method of claim 13, comprising generating coefficients of the filter during a period when only speech is being received by the first physical microphone and the second physical microphone.

17. The method of claim 13, wherein the forming of the filter comprises:

generating a first quantity by applying a calibration to the second signal;

generating a second quantity by applying the delay to the first signal;

forming the filter as a ratio of the first quantity to the second quantity.

18. The method of claim 17, wherein the generating of the energy ratio comprises generating the energy ratio for a frequency band.

19. The method of claim 17, wherein the generating of the energy ratio comprises generating the energy ratio for a frequency subband.

20. The method of claim 19, wherein the frequency subband includes frequencies higher than approximately 200 Hertz (Hz).

21. The method of claim 19, wherein the frequency subband includes frequencies in a range from approximately 250 Hz to 1250 Hz.

22. The method of claim 19, wherein the frequency subband includes frequencies in a range from approximately 200 Hz to 3000 Hz.

23. The method of claim 12, wherein the filter is a static filter.

24. The method of claim 23, wherein the forming of the filter comprises:

determining a first distance as distance between the first physical microphone and a mouth of the speaker;

determining a second distance as distance between the second physical microphone and the mouth; and

forming a ratio of the first distance to the second distance.

25. The method of claim 1, comprising generating a vector of the energy ratio versus time.

26. The method of claim 1, wherein the first and second physical microphones are omnidirectional microphones.

27. The method of claim 1, comprising positioning the first physical microphone and the second physical microphone along an axis and separating the first physical microphone and the second physical microphone by a first distance.

28. The method of claim 27, wherein a midpoint of the axis is a second distance from a mouth of the speaker, wherein the mouth is located in a direction defined by an angle relative to the midpoint.

29. A method comprising:

forming a first virtual microphone;

forming a filter by generating a first quantity by applying a calibration to a second signal of a second physical microphone, generating a second quantity by applying the delay to a first signal of a

first physical microphone, and forming the filter as a ratio of the first quantity to the second quantity;

forming a second virtual microphone by applying the filter to the first signal to generate a first intermediate signal, and summing the first intermediate signal and the second signal; and

generating a ratio of energies of the first virtual microphone and the second virtual microphone and detecting acoustic voice activity using the ratio.

30. The method of claim 29, wherein the first virtual microphone and the second virtual microphone have approximately similar responses to noise and approximately dissimilar responses to speech.

31. The method of claim 29, comprising applying a calibration to at least one of the first signal and the second signal, wherein the calibration compensates a second response of the second physical microphone so that the second response is equivalent to a first response of the first physical microphone.

32. The method of claim 29, comprising applying a delay to the first intermediate signal, wherein the delay is proportional to a time difference between arrival of the speech at the second physical microphone and arrival of the speech at the first physical microphone.

33. The method of claim 29, wherein the forming of the first virtual microphone comprises applying the filter to the second signal.

34. The method of claim 33, wherein the forming of the first virtual microphone comprises applying the calibration to the second signal.

35. The method of claim 34, wherein the forming of the first virtual microphone comprises applying the delay to the first signal.

36. The method of claim 35, wherein the forming of the first virtual microphone by the combining comprises subtracting the second signal from the first signal.

37. The method of claim 29, wherein the filter is an adaptive filter.

38. The method of claim 29, comprising adapting the filter to minimize a second virtual microphone output when only speech is being received by the first physical microphone and the second physical microphone.

39. The method of claim 37, wherein the adapting comprises applying a least-mean squares process.

40. The method of claim 37, comprising generating coefficients of the filter during a period when only speech is being received by the first physical microphone and the second physical microphone.

41. The method of claim 29, wherein the generating of the ratio comprises generating the ratio for a frequency band.

42. The method of claim 29, wherein the generating of the ratio comprises generating the ratio for a frequency subband.

43. The method of claim 29, comprising generating a vector of the ratio versus time.

44. A method comprising:

forming a first virtual microphone by generating a first combination of a first signal and a second signal, wherein the first signal is received from a first physical microphone and the second signal is received from a second physical microphone;

forming a filter by generating a first quantity by applying a calibration to at least one of the first signal and the second signal, generating a second quantity by applying a delay to the first signal, and forming the filter as a ratio of the first quantity to the second quantity; and

forming a second virtual microphone by applying the filter to the first signal to generate a first intermediate signal and summing the first intermediate signal and the second signal; and

determining a presence of acoustic voice activity of a speaker when an energy ratio of energies of the first virtual microphone and the second virtual microphone is greater than a threshold value.

ABSTRACT

Acoustic Voice Activity Detection (AVAD) methods and systems are described. The AVAD methods and systems, including corresponding algorithms or programs, use microphones to generate virtual directional microphones which have very similar noise responses and very dissimilar speech responses. The ratio of the energies of the virtual microphones is then calculated over a given window size and the ratio can then be used with a variety of methods to generate a VAD signal. The virtual microphones can be constructed using either an adaptive or a fixed filter.

Meta Platforms, Inc. Exhibit 1002
Page 72 of 309

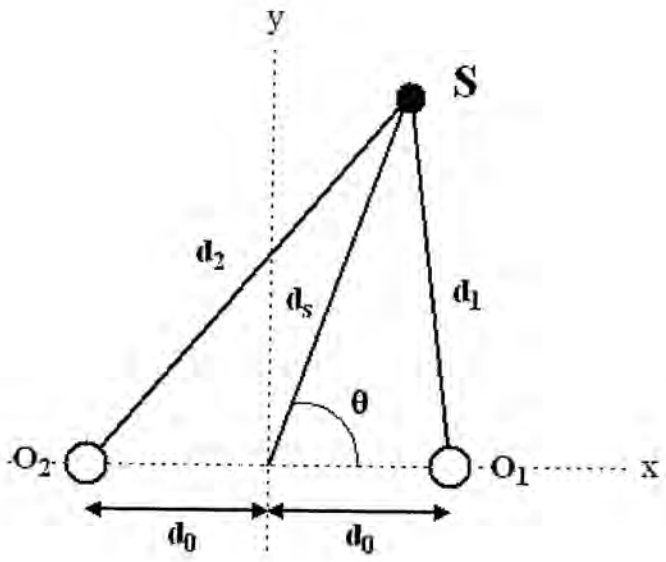

Figure 1

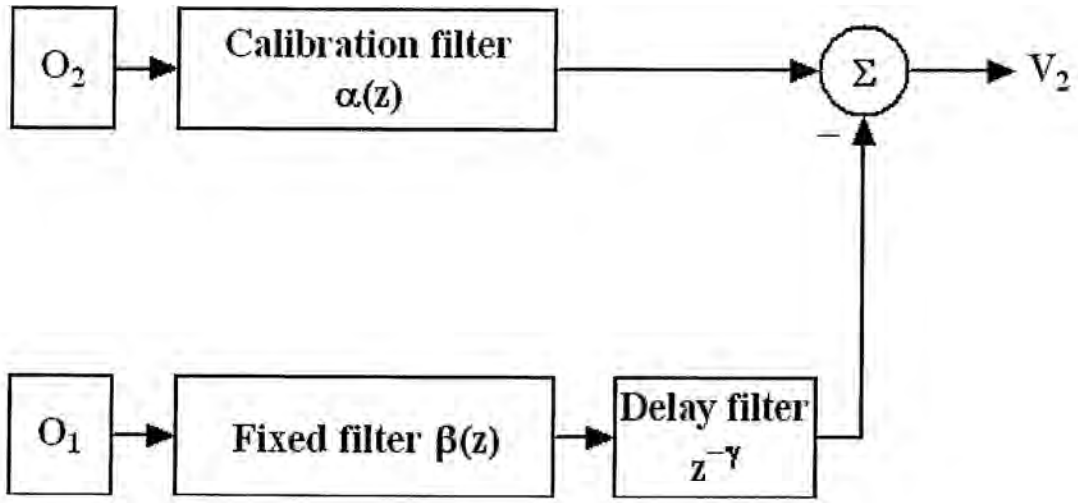
O2
Calibration filter
α(z)
Σ
V2
−
O1
Fixed filter β(z)
Delay filter
z^−γ

Figure 2

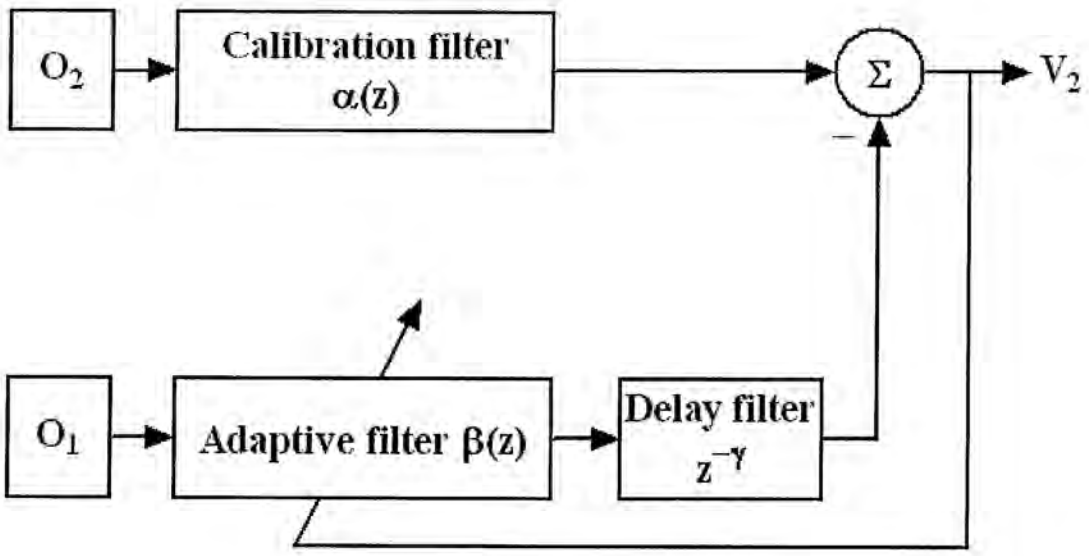
O2
Calibration filter
α(z)
Σ
V2
−
O1
Adaptive filter β(z)
Delay filter
z^−γ

Figure 3

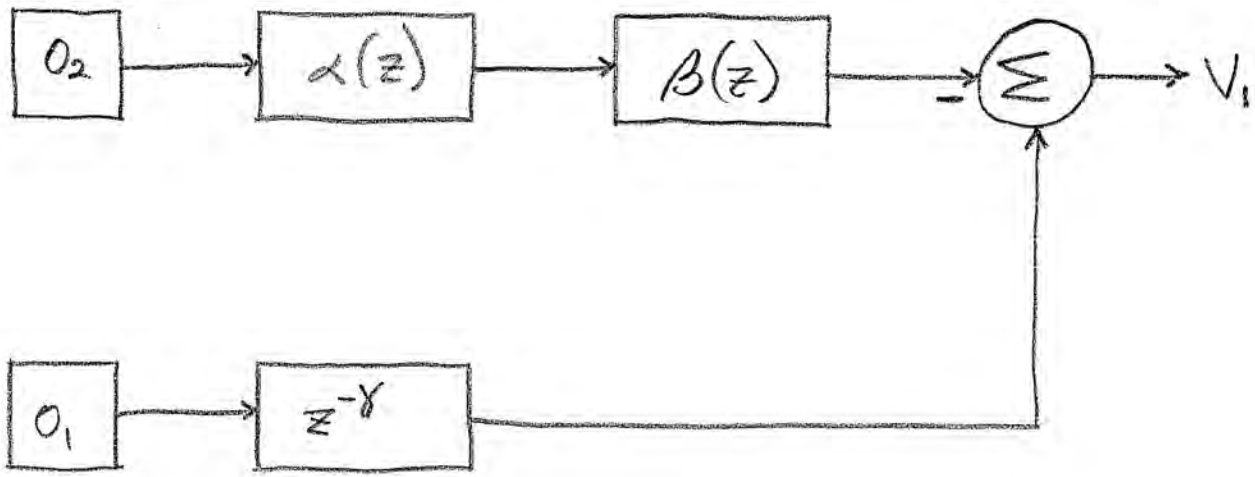

FIGURE 4

500

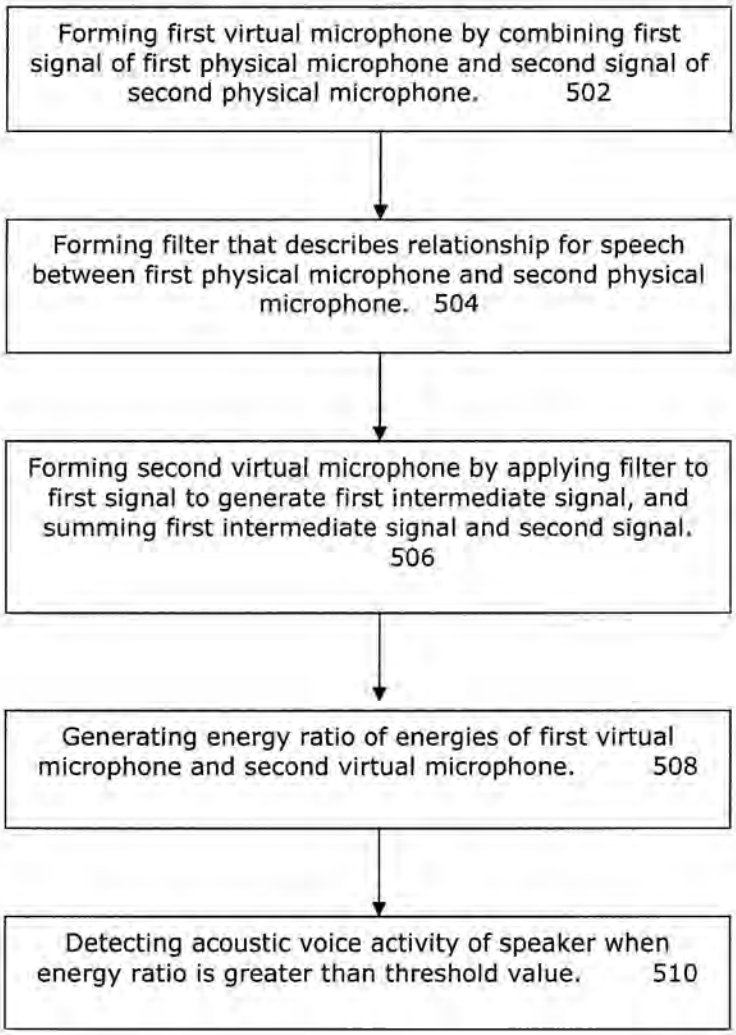
Forming first virtual microphone by combining first signal of first physical microphone and second signal of second physical microphone. 502
Forming filter that describes relationship for speech between first physical microphone and second physical microphone. 504
Forming second virtual microphone by applying filter to first signal to generate first intermediate signal, and summing first intermediate signal and second signal. 506
Generating energy ratio of energies of first virtual microphone and second virtual microphone. 508
Detecting acoustic voice activity of speaker when energy ratio is greater than threshold value. 510

Figure 5

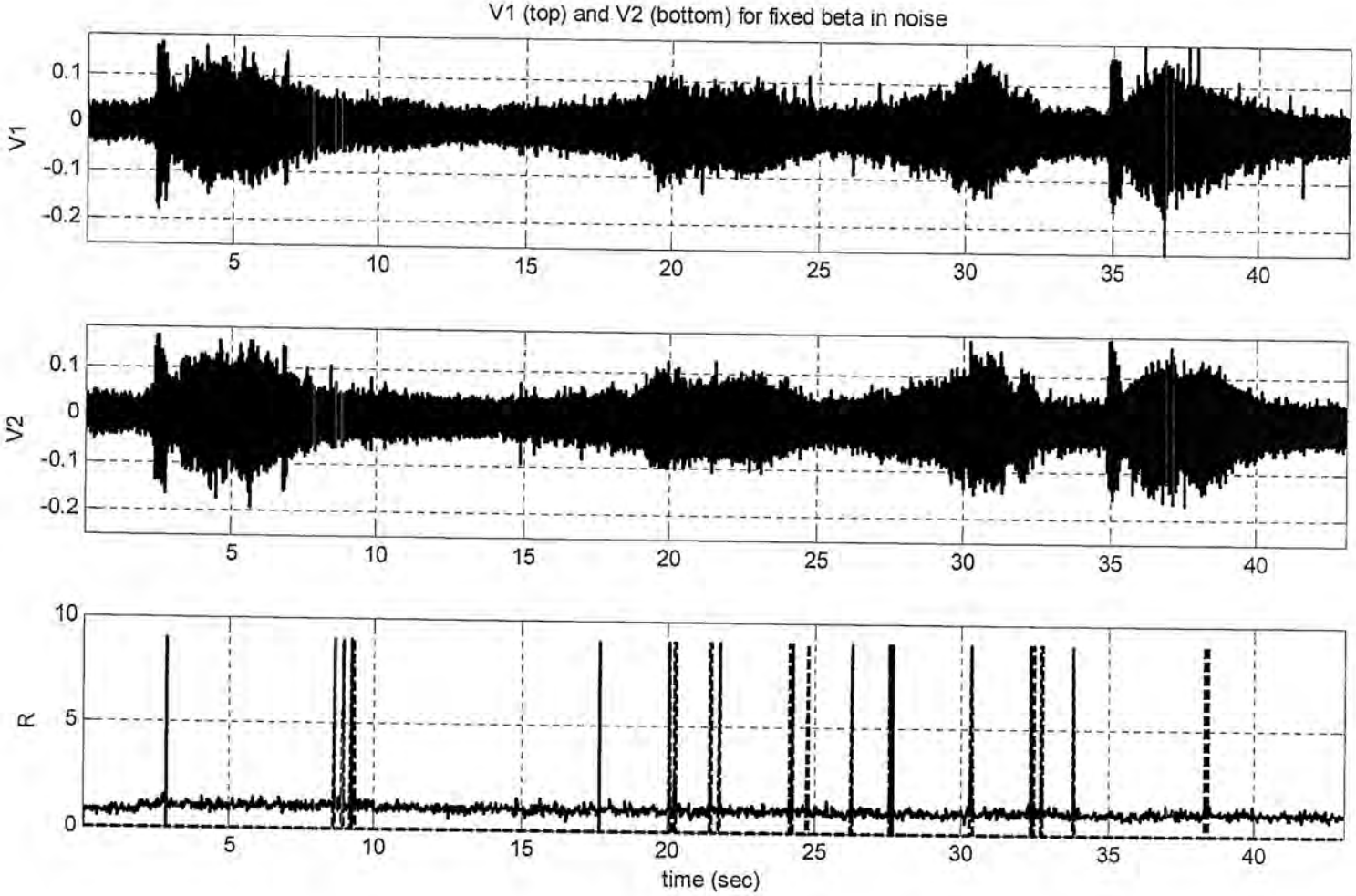
V1 (top) and V2 (bottom) for fixed beta in noise
V1
V2
R
0.1
0
-0.1
-0.2
10
5
0
5
10
15
20
25
30
35
40
time (sec)

Figure 6

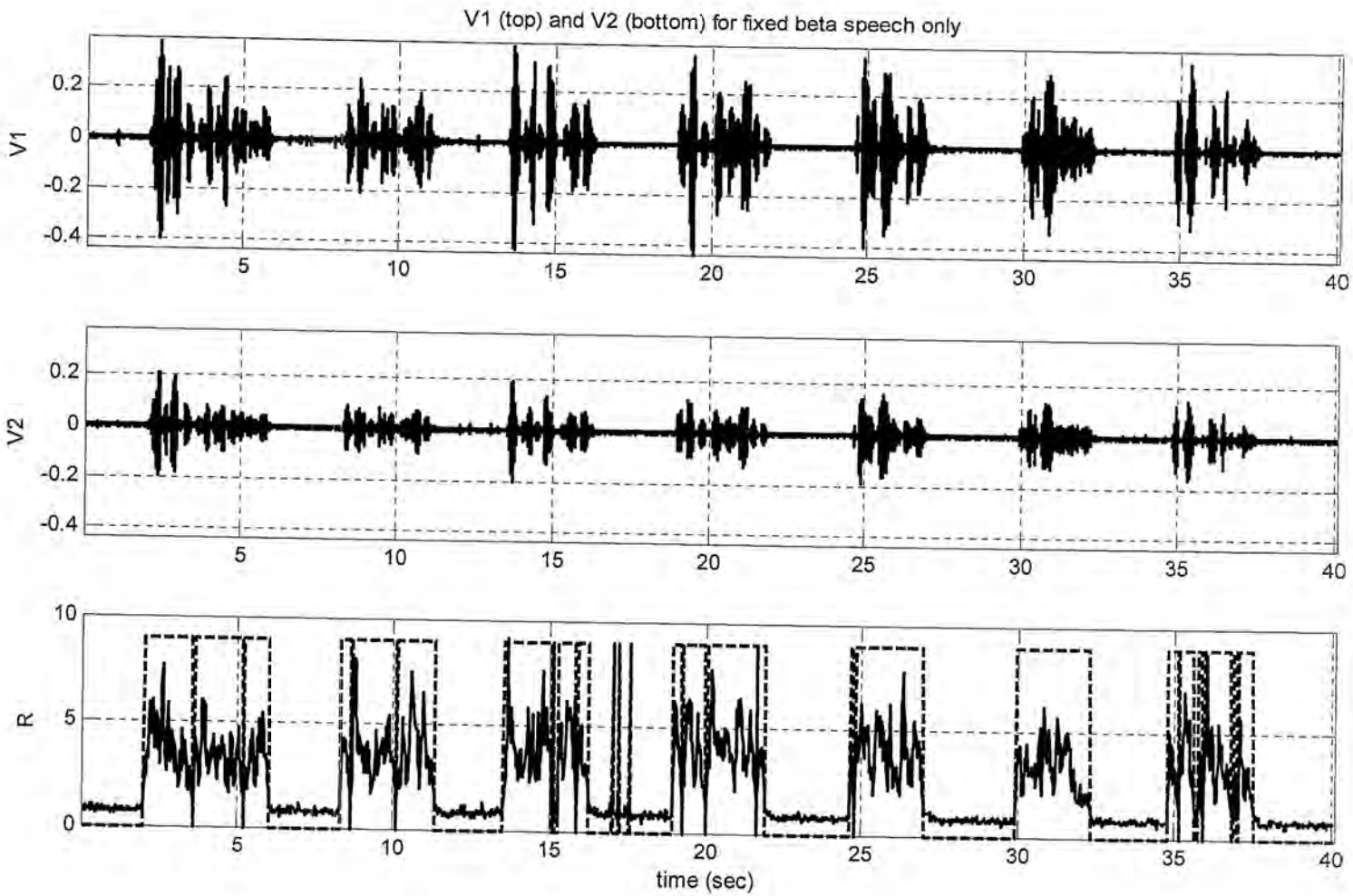
V1 (top) and V2 (bottom) for fixed beta speech only
V1
V2
R
0.2
0
-0.2
-0.4
10
5
0
5
10
15
20
25
30
35
40
time (sec)

Figure 7

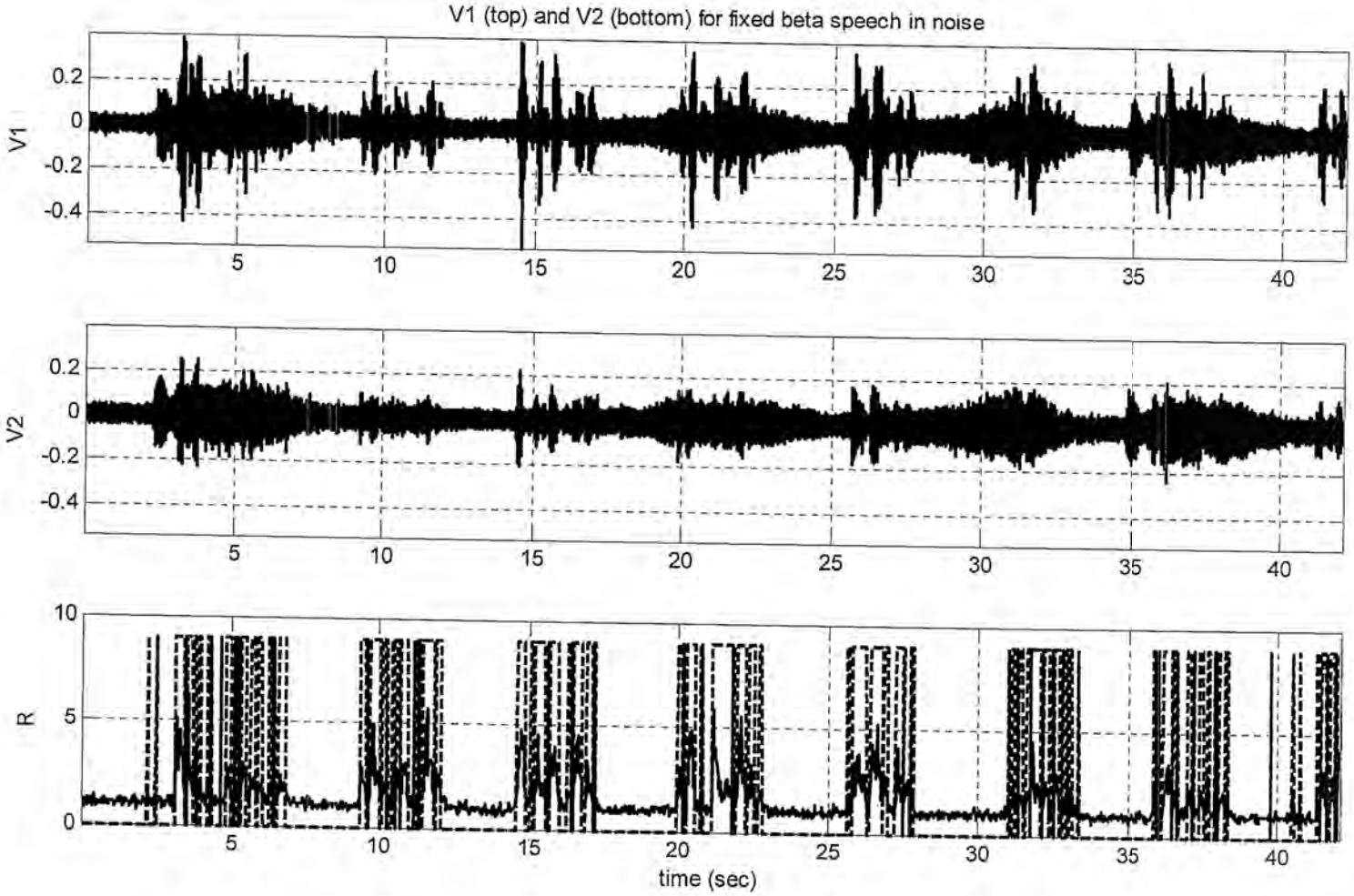
V1 (top) and V2 (bottom) for fixed beta speech in noise
V1
V2
R
0.2
0
-0.2
-0.4
10
5
0
5
10
15
20
25
30
35
40
time (sec)

Figure 8

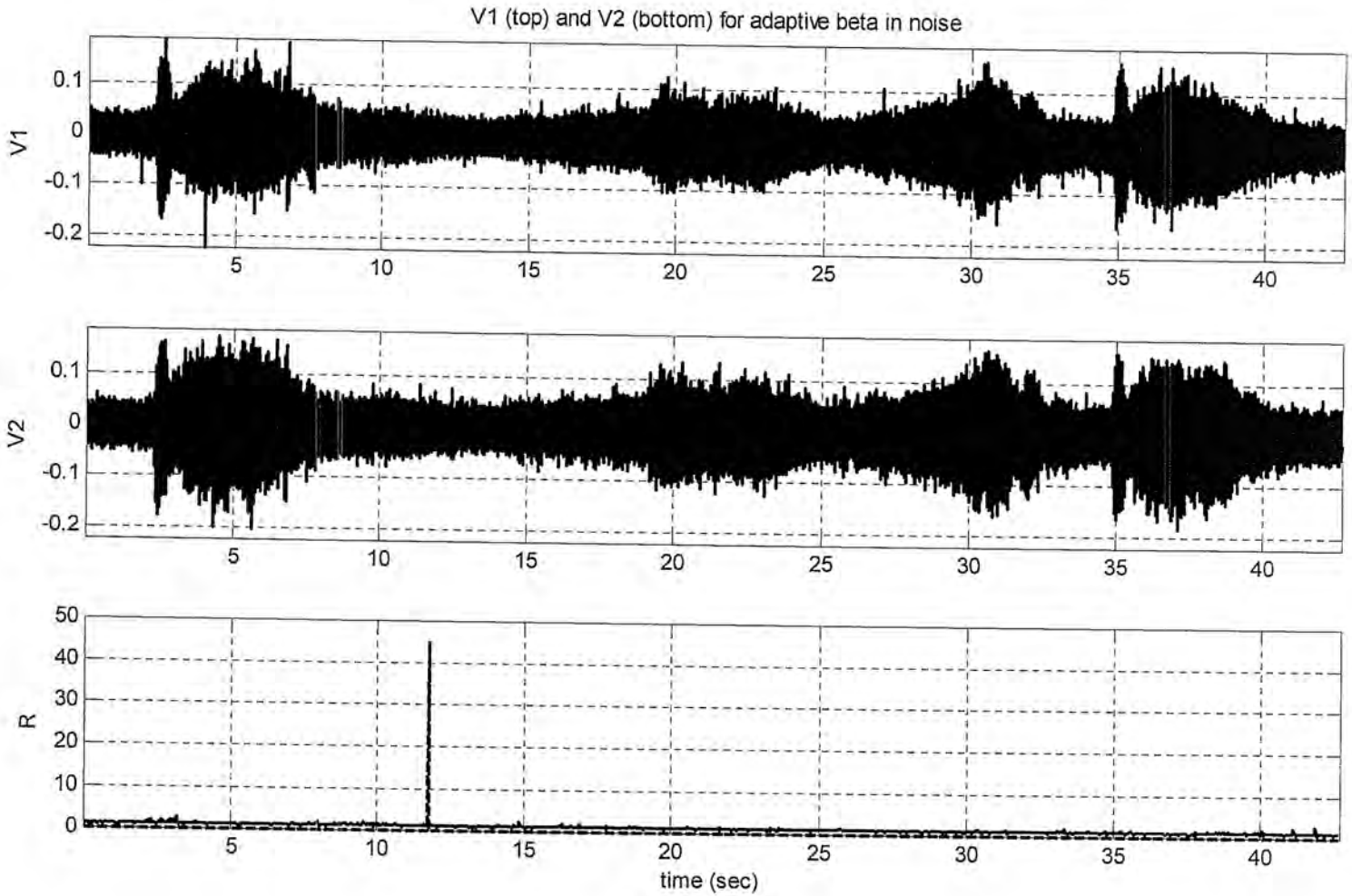
V1 (top) and V2 (bottom) for adaptive beta in noise
V1
V2
R
0.1
0
-0.1
-0.2
50
40
30
20
10
5
10
15
20
25
30
35
40
time (sec)

Figure 9

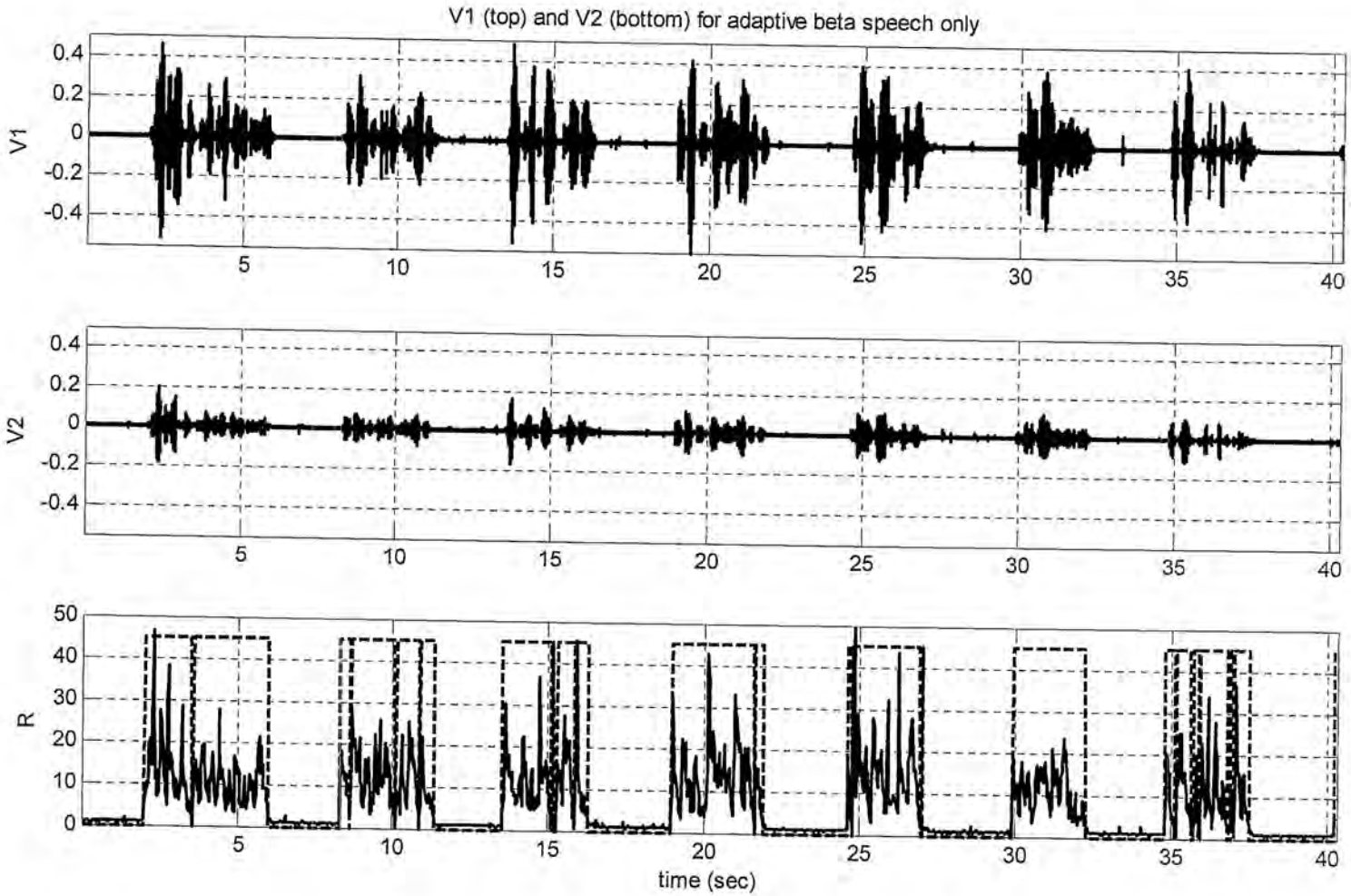
V1 (top) and V2 (bottom) for adaptive beta speech only
V1
V2
R
0.4
0.2
0
-0.2
-0.4
50
40
30
20
10
5
15
25
35
time (sec)

Figure 10

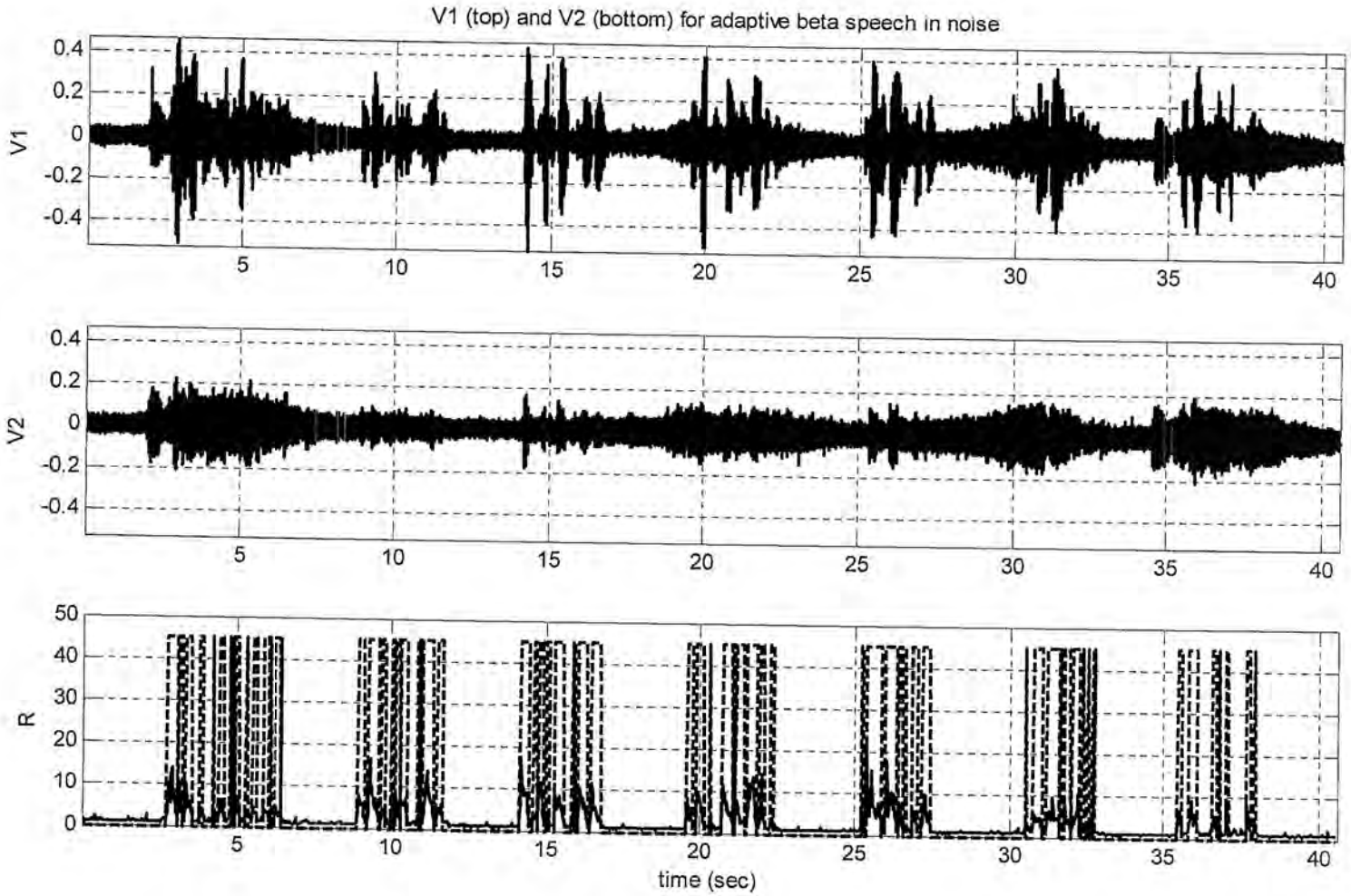
V1 (top) and V2 (bottom) for adaptive beta speech in noise
V1
V2
R
time (sec)

Figure 11

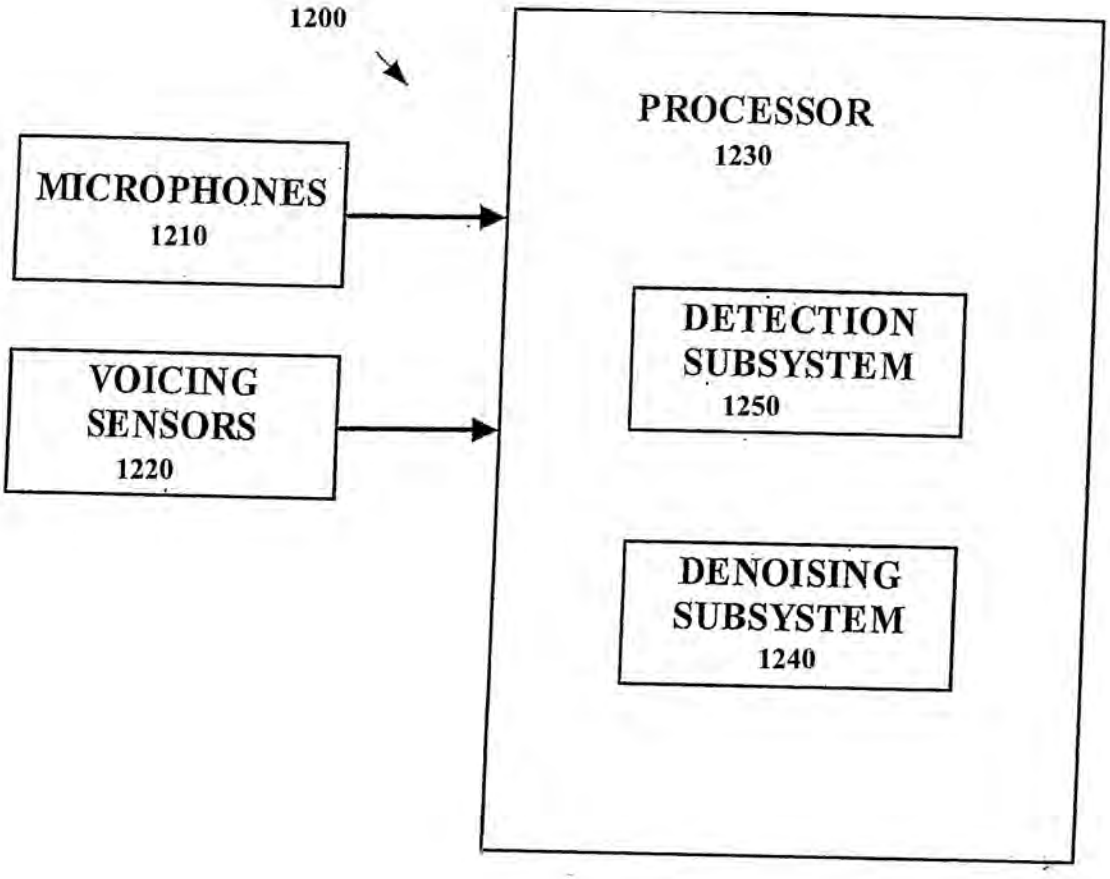
1200
PROCESSOR
1230
MICROPHONES
1210
DETECTION SUBSYSTEM
1250
VOICING SENSORS
1220
DENOISING SUBSYSTEM
1240

FIGURE 12

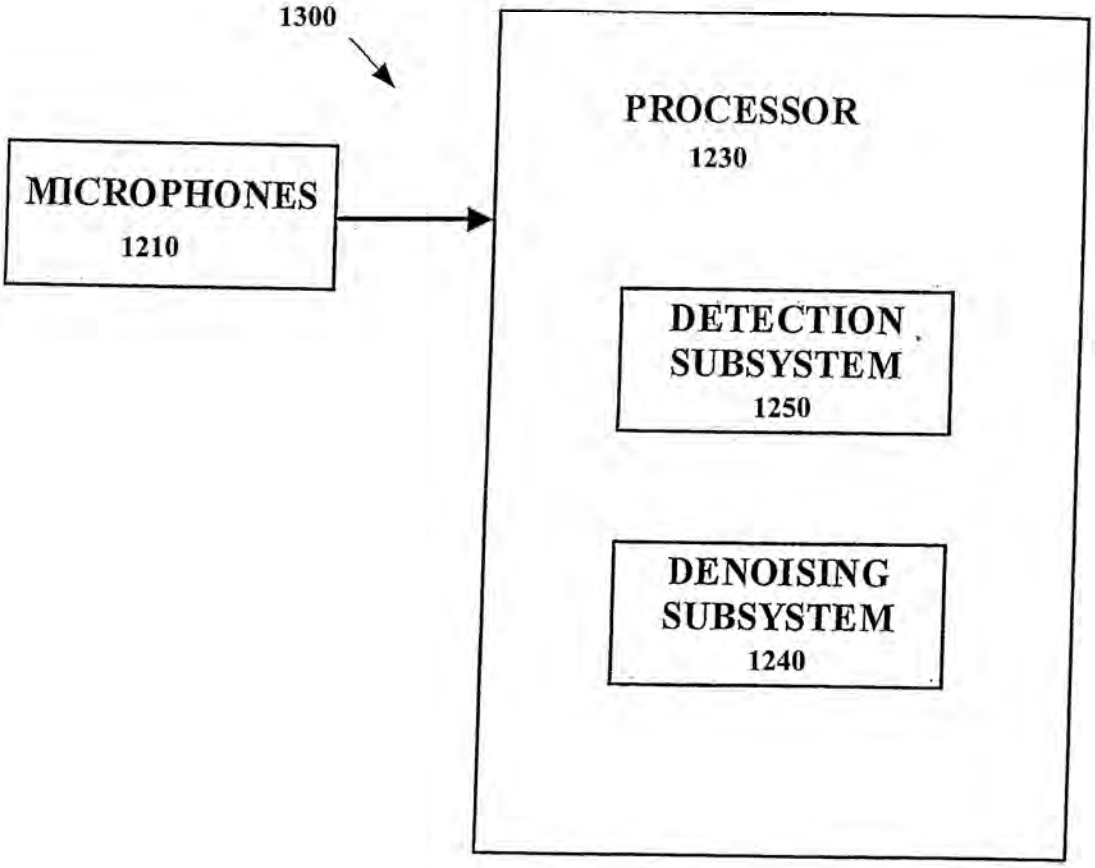
1300
MICROPHONES
1210
PROCESSOR
1230
DETECTION SUBSYSTEM
1250
DENOISING SUBSYSTEM
1240

Figure 13

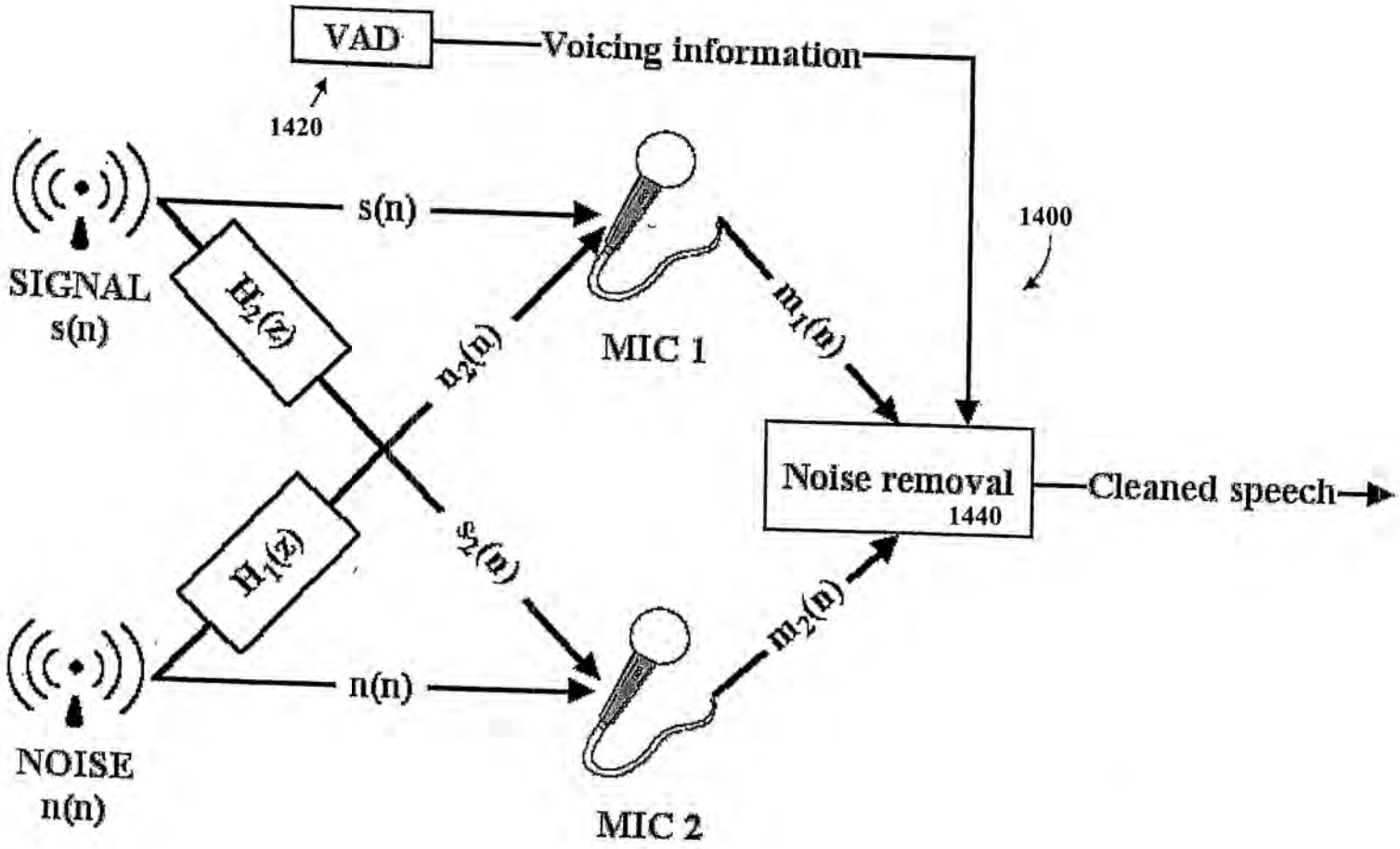
VAD
Voicing information
1420
1400
SIGNAL
s(n)
s(n)
$H_2(z)$
$n_2(n)$
MIC 1
$m_1(n)$
Noise removal
1440
Cleaned speech
$s_2(n)$
$H_1(z)$
$m_2(n)$
NOISE
n(n)
n(n)
MIC 2

Figure 14

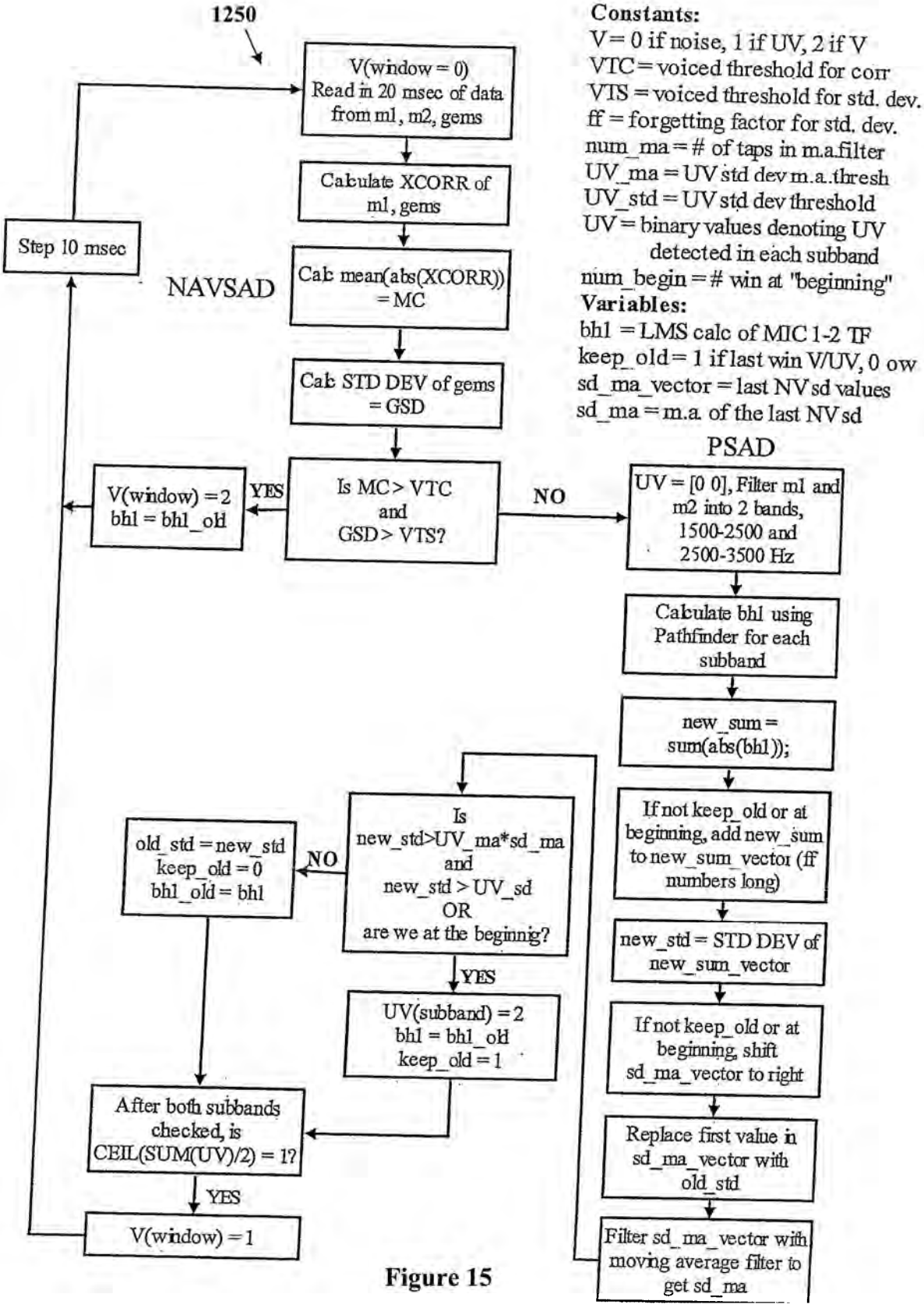
1250
Constants:
V = 0 if noise, 1 if UV, 2 if V
VTC = voiced threshold for corr
VTS = voiced threshold for std. dev.
ff = forgetting factor for std. dev.
num_ma = # of taps in m.a.filter
UV_ma = UV std dev m.a.thresh
UV_std = UV std dev threshold
UV = binary values denoting UV detected in each subband
num_begin = # win at "beginning"
Variables:
bh1 = LMS calc of MIC 1-2 TF
keep_old = 1 if last win V/UV, 0 ow
sd_ma_vector = last NV sd values
sd_ma = m.a. of the last NV sd
V(window = 0)
Read in 20 msec of data from m1, m2, gems
Calculate XCORR of m1, gems
Step 10 msec
NAVSAD
Calc mean(abs(XCORR)) = MC
Calc STD DEV of gems = GSD
PSAD
V(window) = 2
bh1 = bh1_old
YES
Is MC > VTC and GSD > VTS?
NO
UV = [0 0], Filter m1 and m2 into 2 bands, 1500-2500 and 2500-3500 Hz
Calculate bh1 using Pathfinder for each subband
new_sum = sum(abs(bh1));
If not keep_old or at beginning, add new_sum to new_sum_vector (ff numbers long)
new_std = STD DEV of new_sum_vector
If not keep_old or at beginning, shift sd_ma_vector to right
Replace first value in sd_ma_vector with old_std
Filter sd_ma_vector with moving average filter to get sd_ma
Is new_std>UV_ma*sd_ma and new_std > UV_sd OR are we at the beginnig?
NO
old_std = new_std
keep_old = 0
bh1_old = bh1
YES
UV(subband) = 2
bh1 = bh1_old
keep_old = 1
After both subbands checked, is CEIL(SUM(UV)/2) = 1?
YES
V(window) = 1

Figure 15

Figure 16A

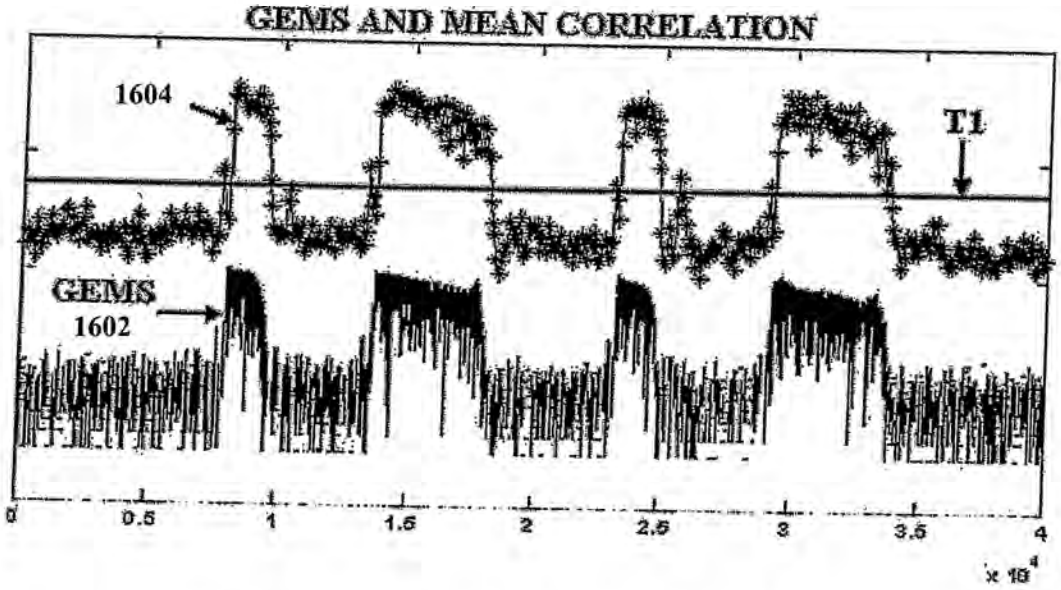

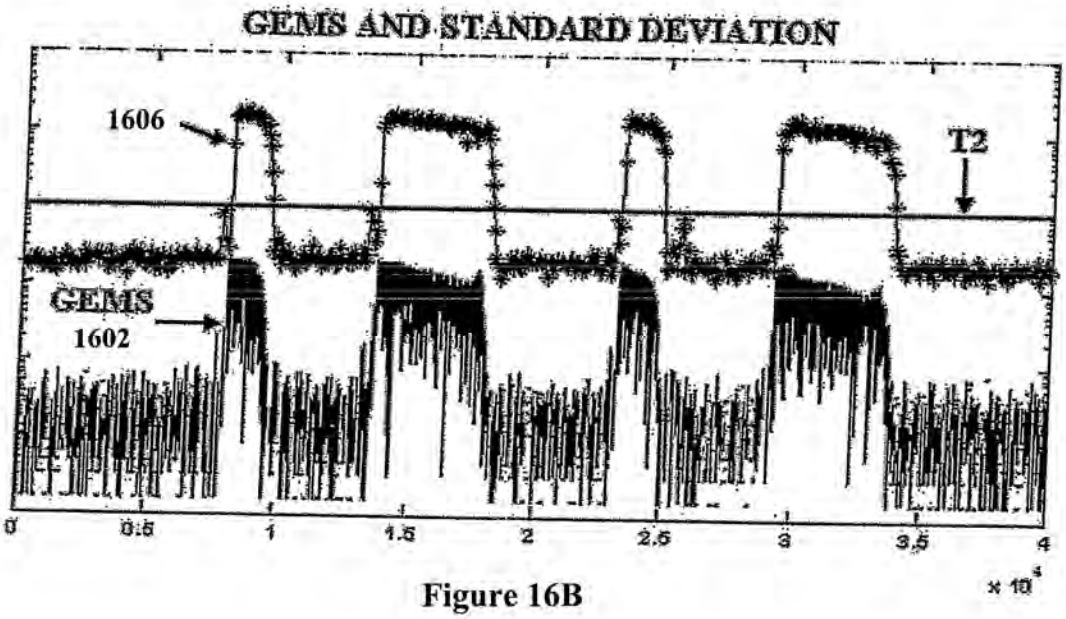

Figure 16B

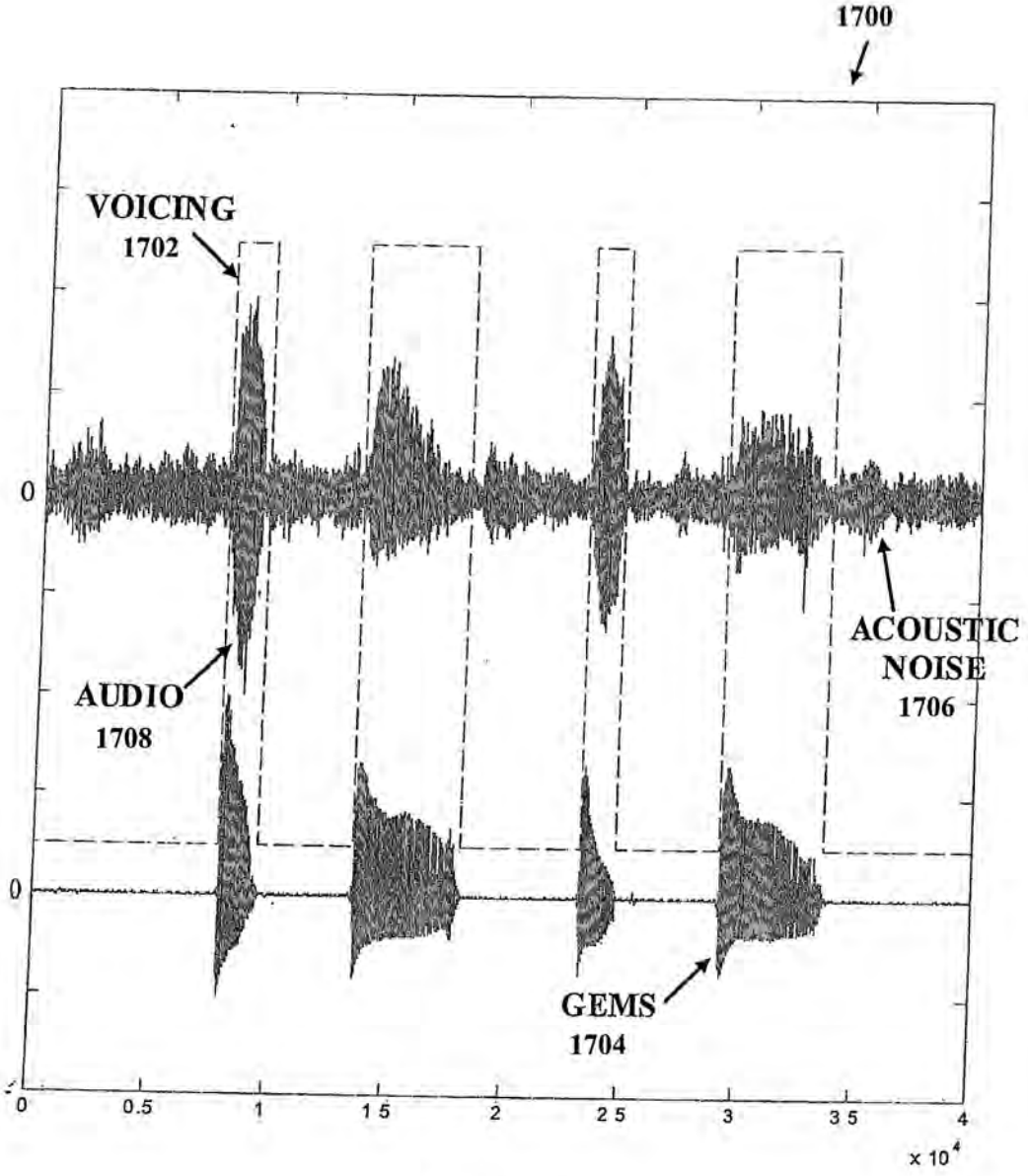
1700
VOICING
1702
0
ACOUSTIC
NOISE
1706
AUDIO
1708
0
GEMS
1704
0
0.5
1
1.5
2
2.5
3
3.5
4
x 10^4

Figure 17

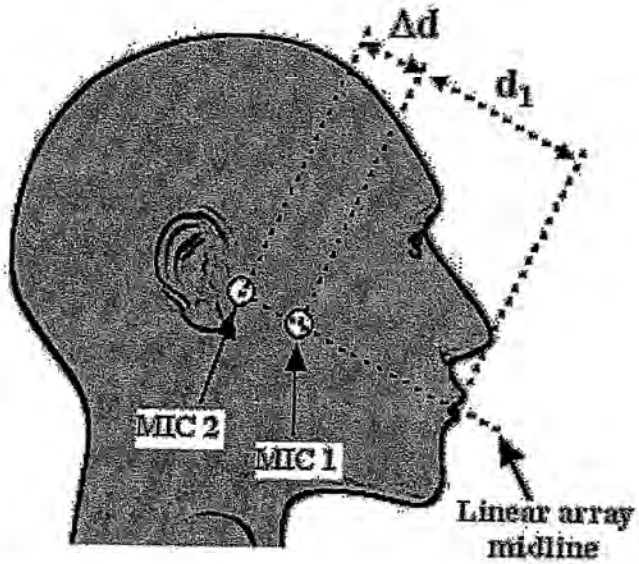

Figure 18

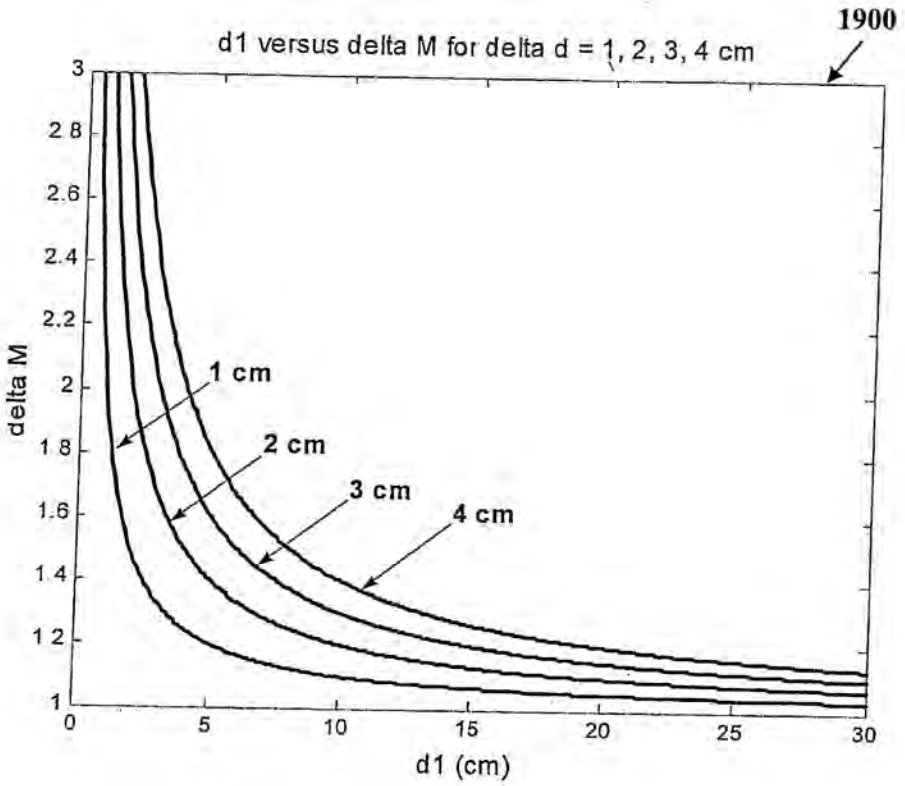
1900
d1 versus delta M for delta d = 1, 2, 3, 4 cm
delta M
d1 (cm)
1 cm
2 cm
3 cm
4 cm
3
2.8
2.6
2.4
2.2
2
1.8
1.6
1.4
1.2
1
0
5
10
15
20
25
30

Figure 19

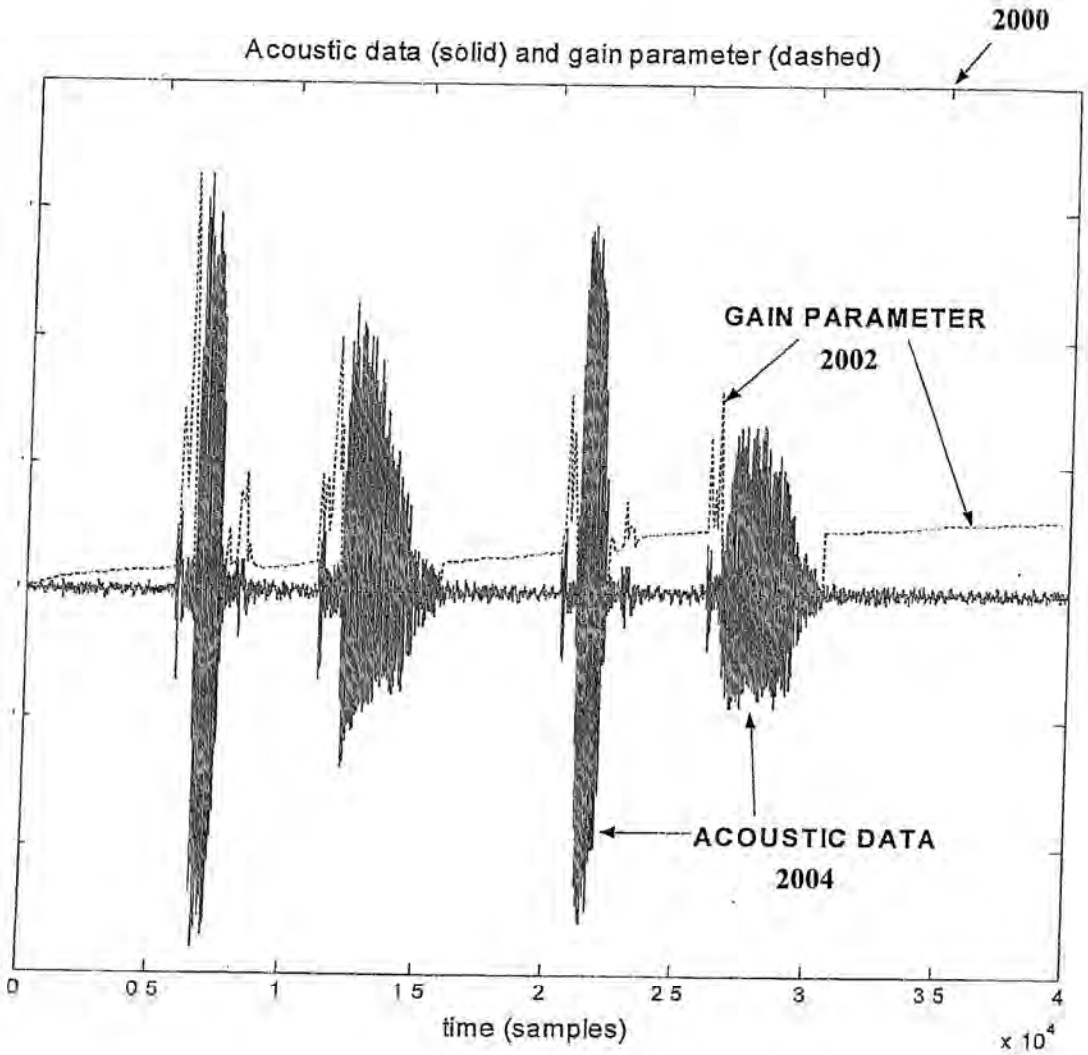
2000
Acoustic data (solid) and gain parameter (dashed)
GAIN PARAMETER
2002
ACOUSTIC DATA
2004
0
0 5
1
1 5
2
2 5
3
3 5
4
time (samples)
x 10^4

Figure 20

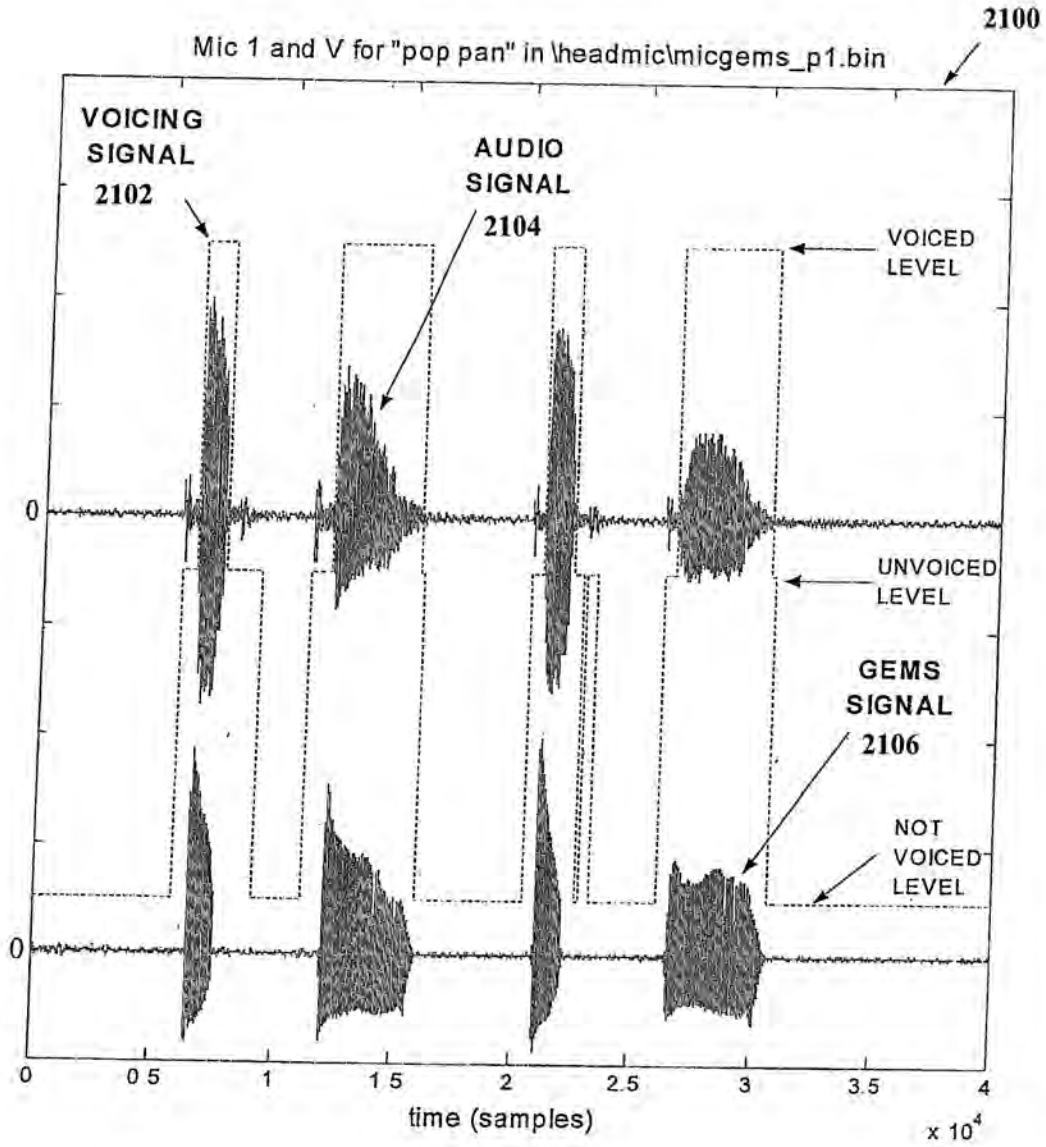
2100
Mic 1 and V for "pop pan" in \headmic\micgems_p1.bin
VOICING SIGNAL
2102
AUDIO SIGNAL
2104
VOICED LEVEL
UNVOICED LEVEL
GEMS SIGNAL
2106
NOT VOICED LEVEL
0
0
0
0.5
1
1.5
2
2.5
3
3.5
4
time (samples)
x 10^4

Figure 21

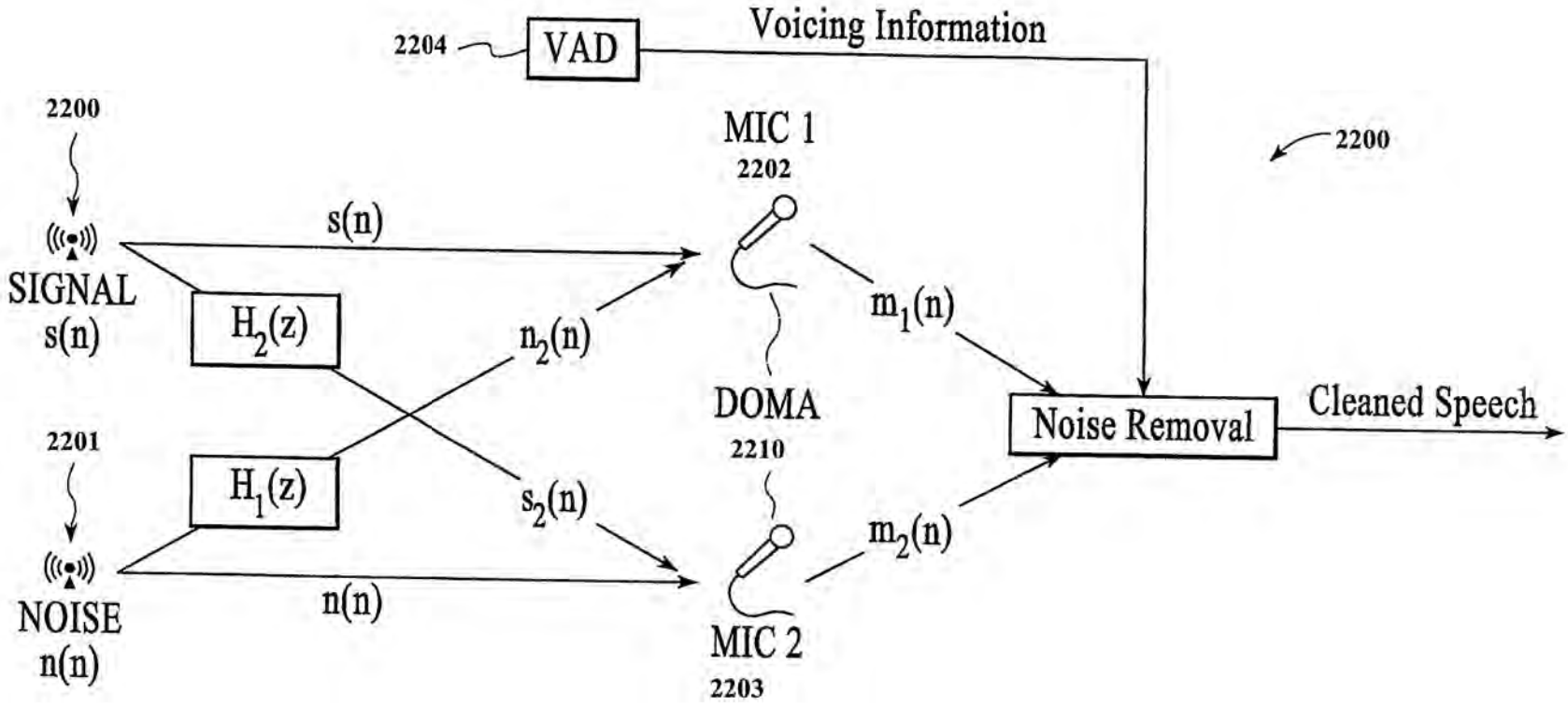
2204
VAD
Voicing Information
2200
2200
MIC 1
2202
s(n)
SIGNAL
s(n)
H2(z)
n2(n)
m1(n)
DOMA
2210
Noise Removal
Cleaned Speech
2201
H1(z)
s2(n)
m2(n)
NOISE
n(n)
n(n)
MIC 2
2203

Figure 22

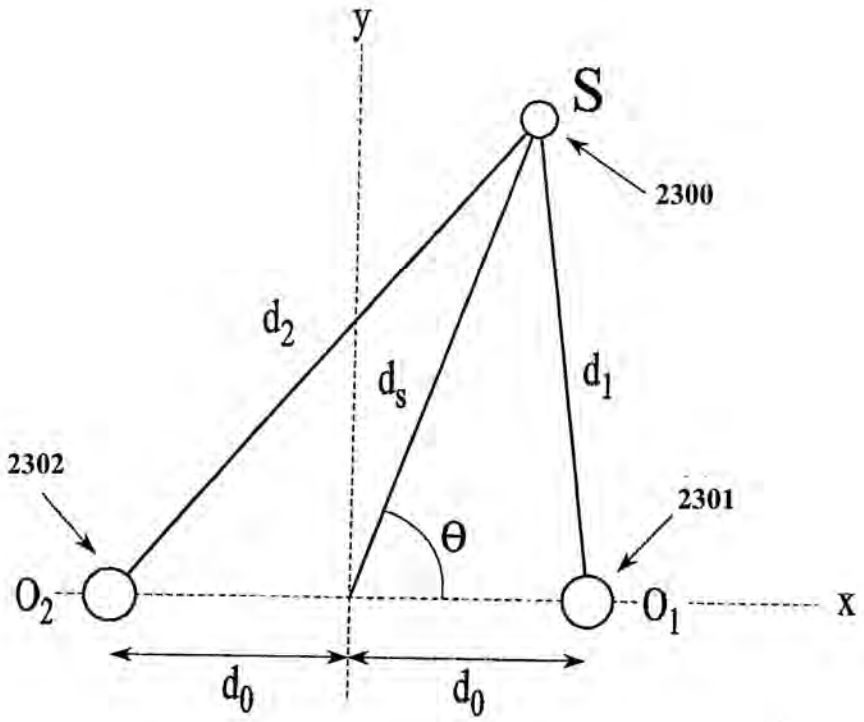

Figure 23

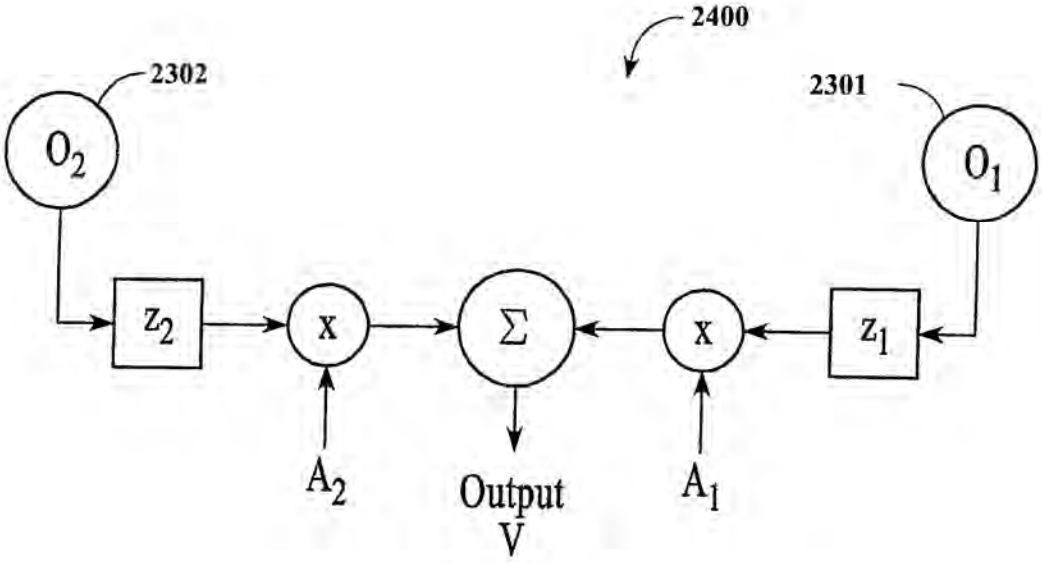

Figure 24

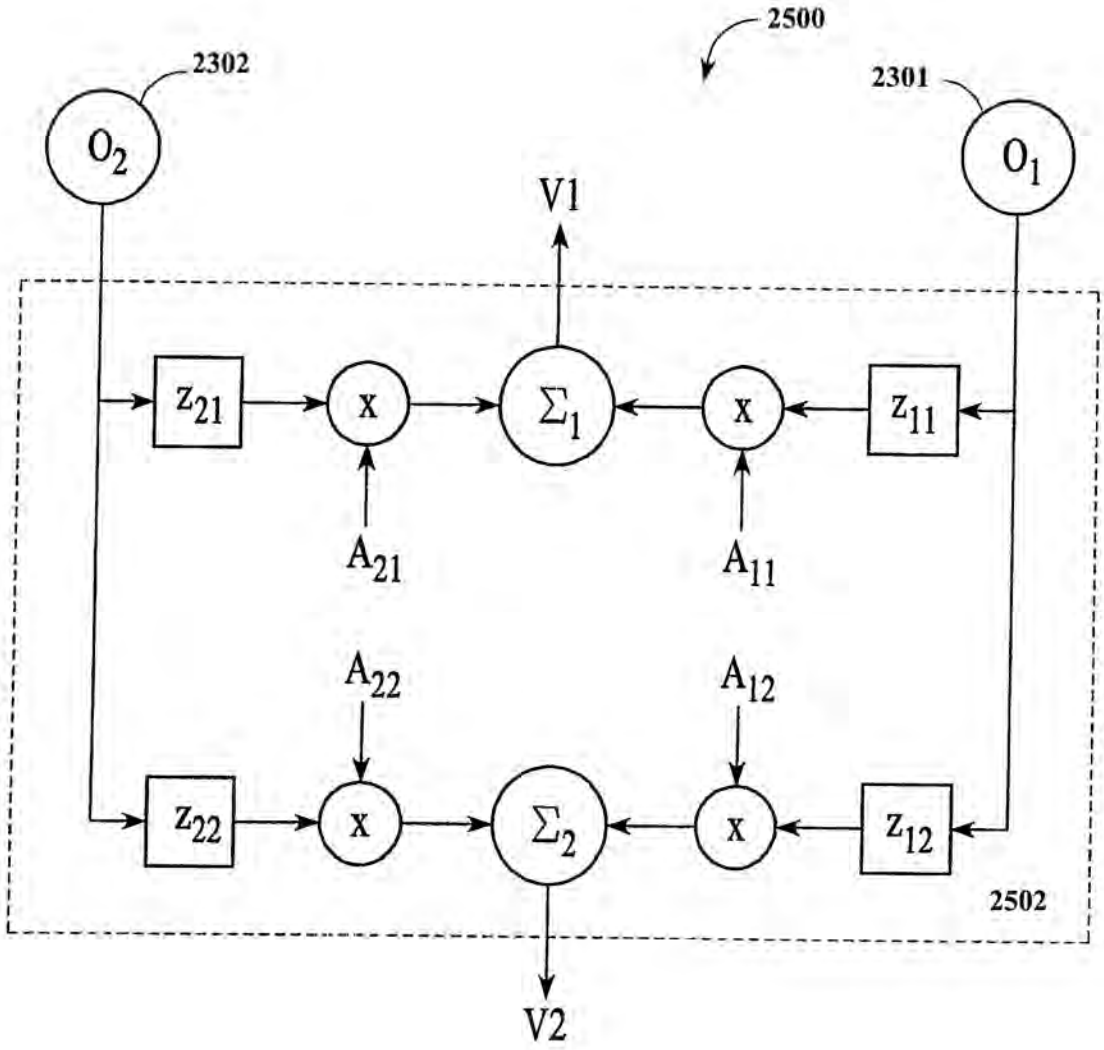
2500
2302
2301
O_2
O_1
V1
z_{21}
x
Σ_1
x
z_{11}
A_{21}
A_{11}
A_{22}
A_{12}
z_{22}
x
Σ_2
x
z_{12}
2502
V2

Figure 25

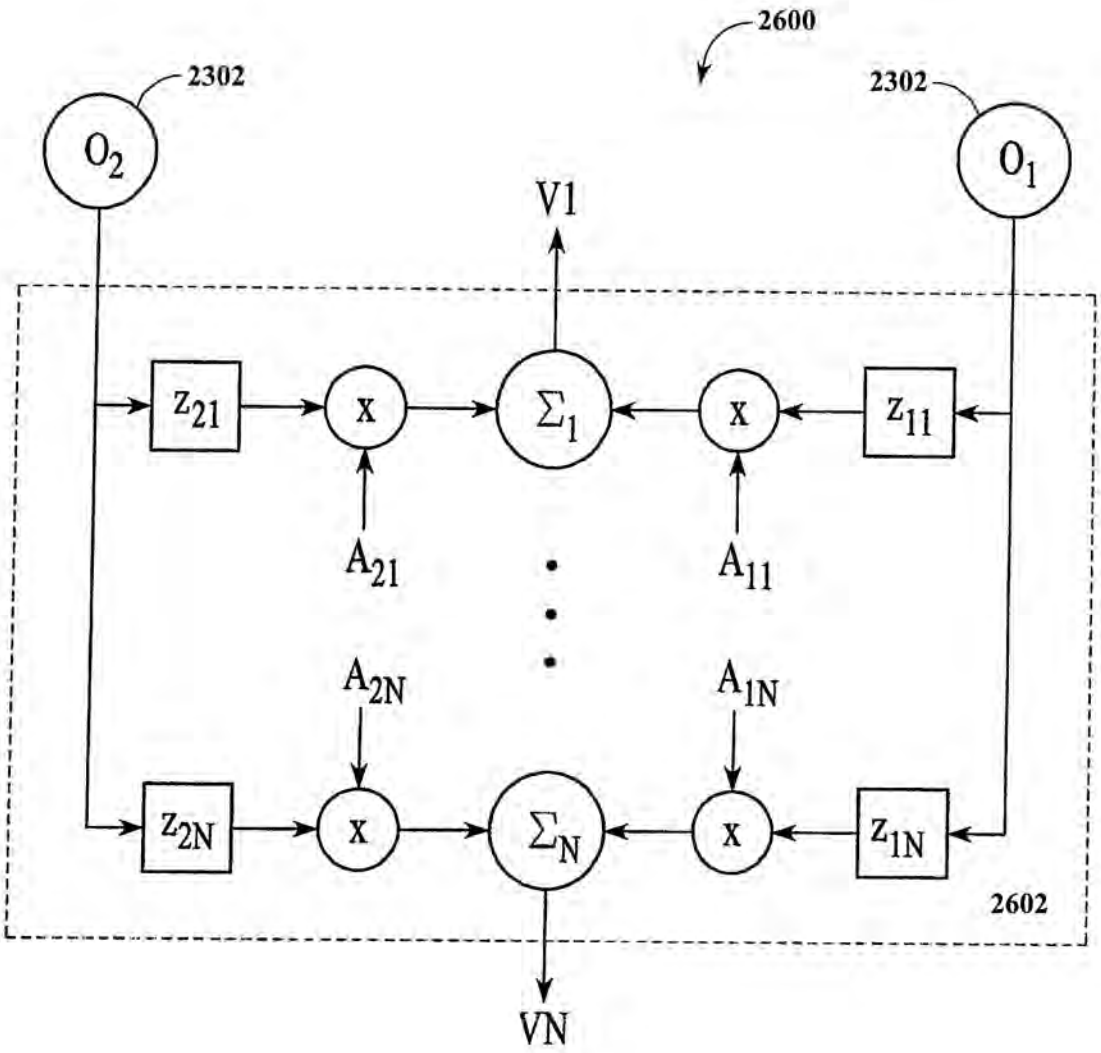
2600
2302
2302
O_2
O_1
V1
z_{21}
x
Σ_1
x
z_{11}
A_{21}
A_{11}
A_{2N}
A_{1N}
z_{2N}
x
Σ_N
x
z_{1N}
2602
VN

Figure 26

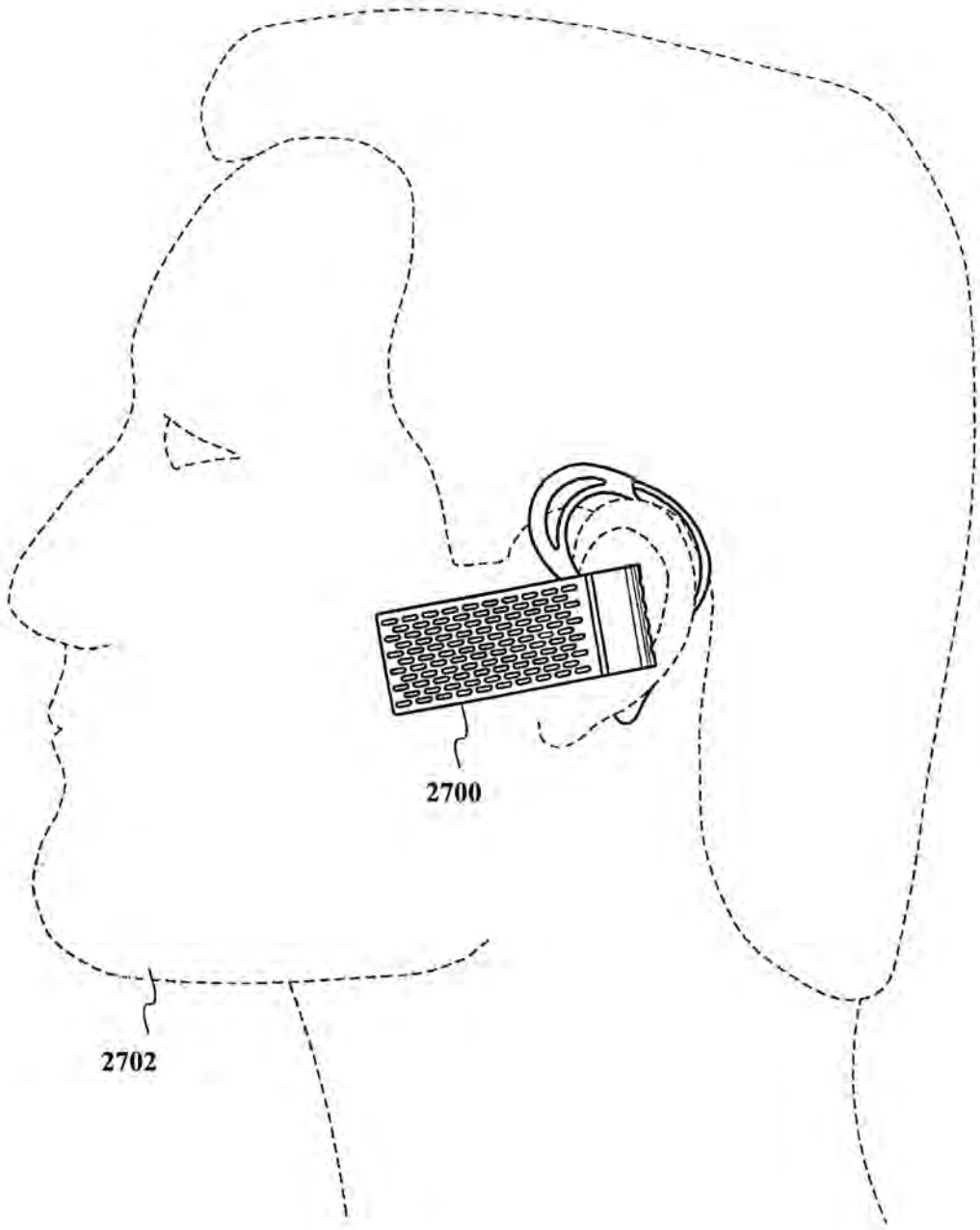

Figure 27

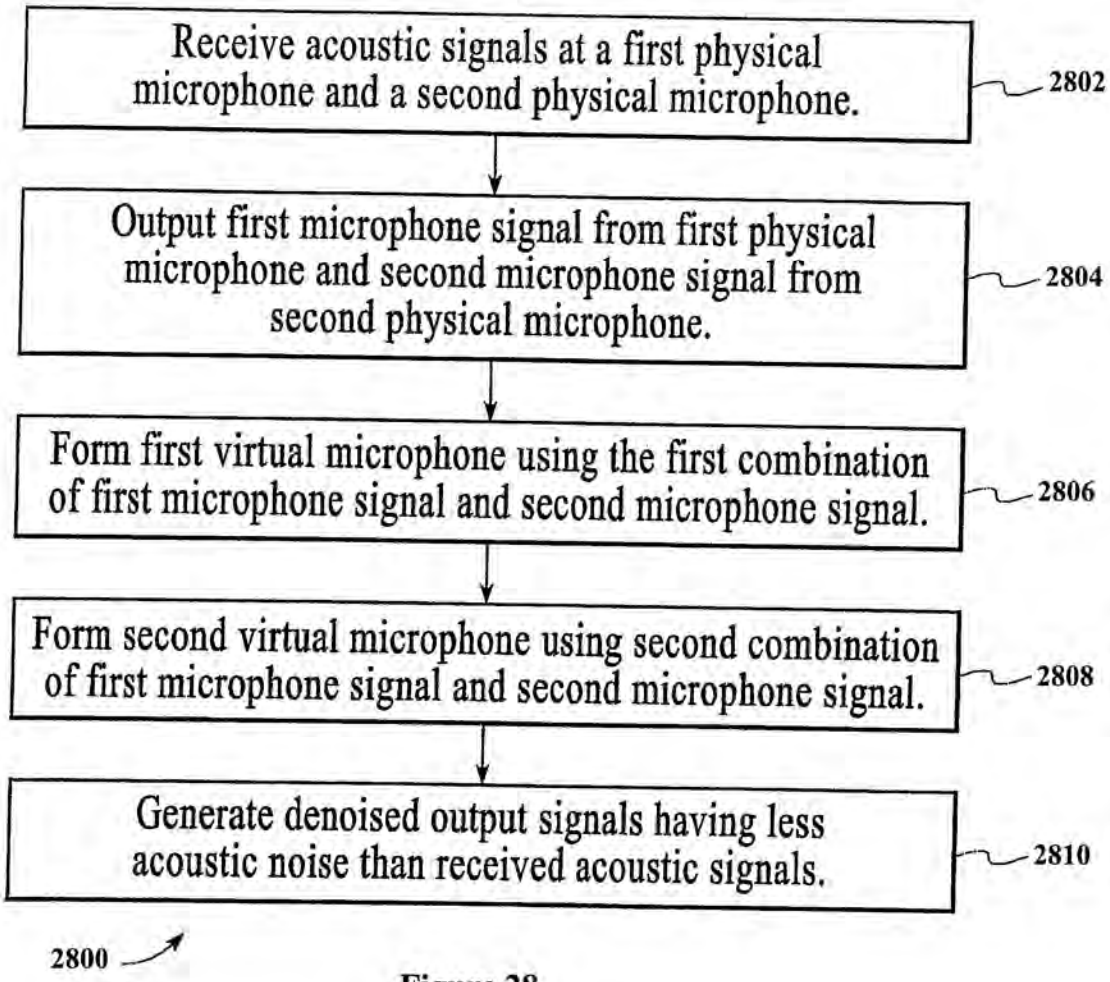

Figure 28

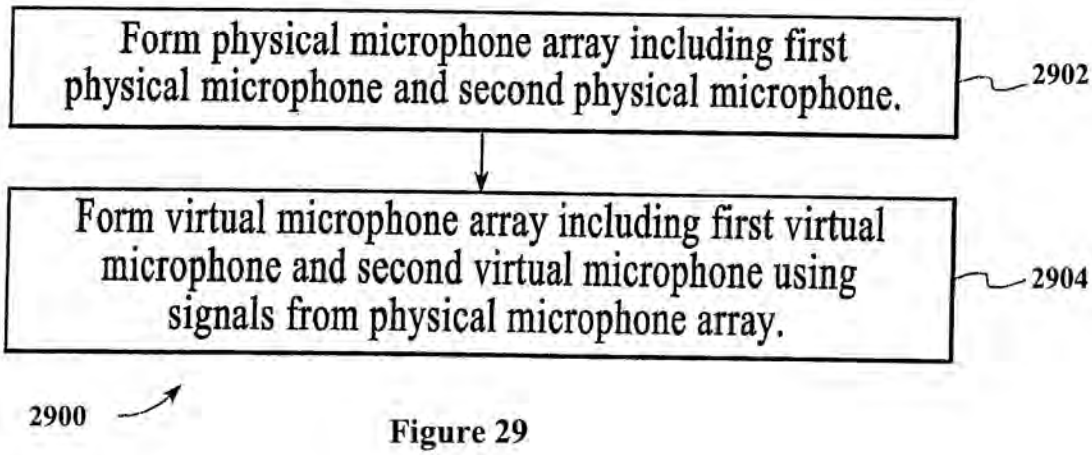

Figure 29

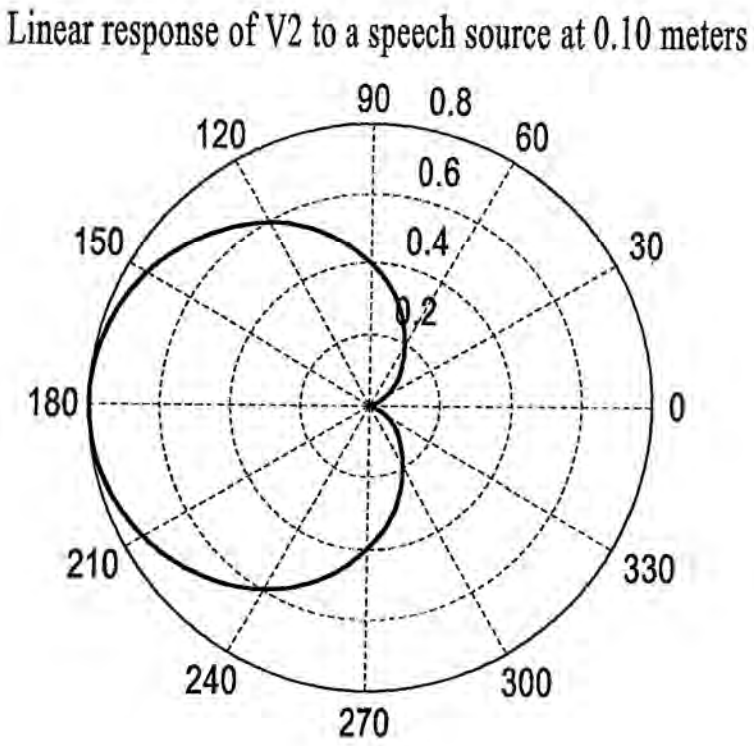

Figure 30

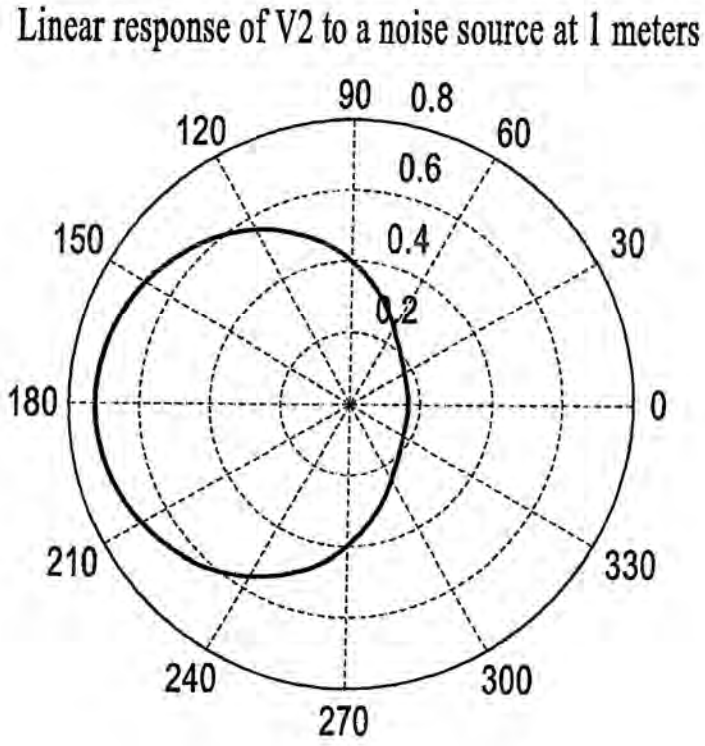

Figure 31

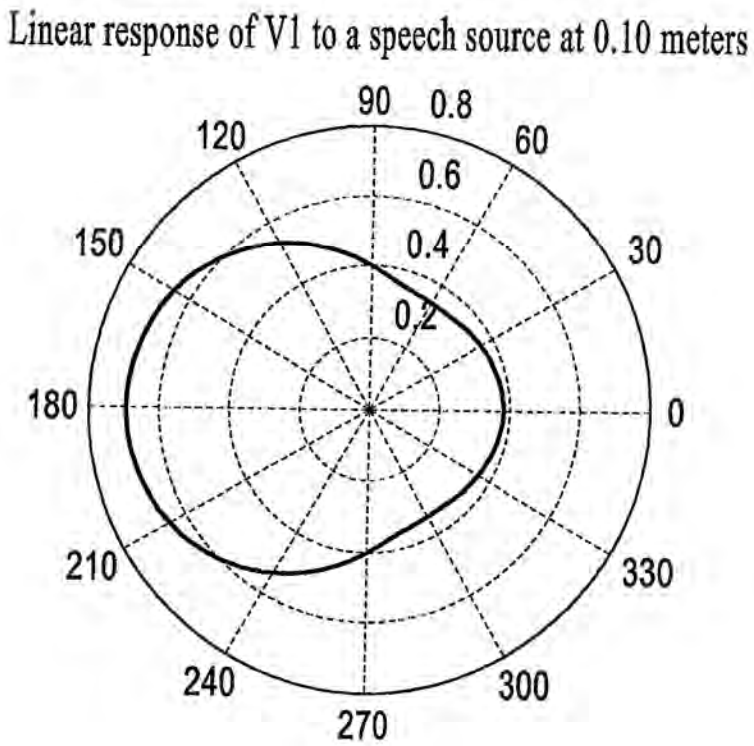

Figure 32

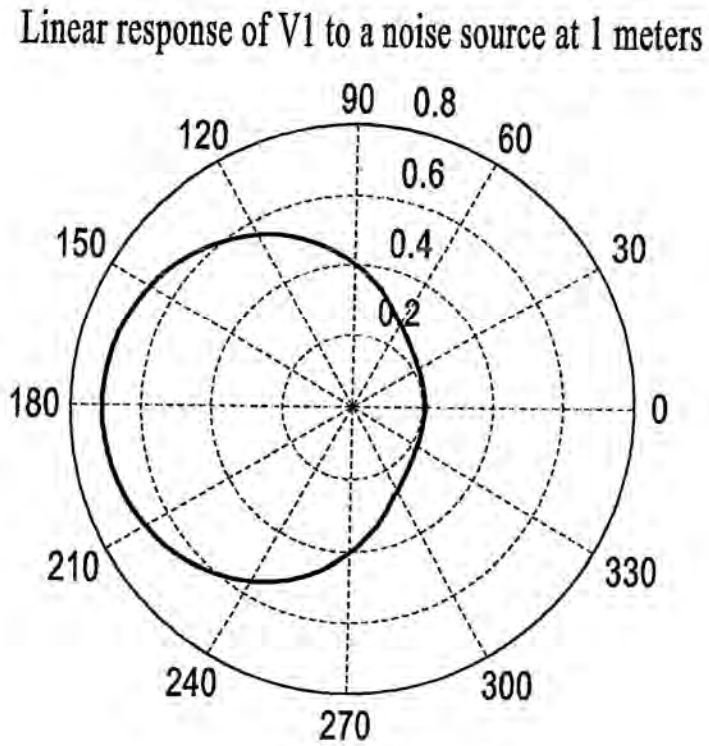

Figure 33

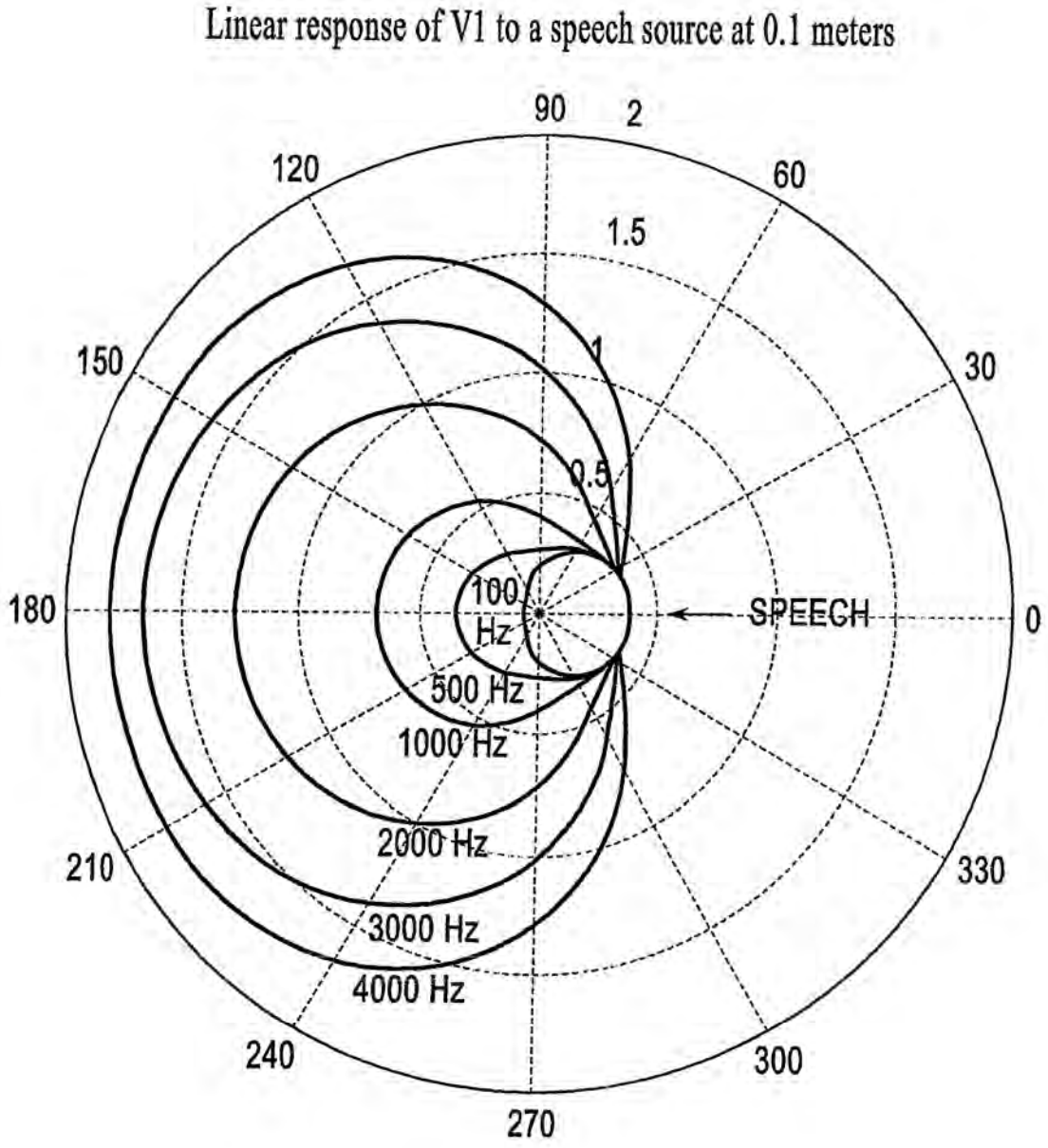
Linear response of V1 to a speech source at 0.1 meters
90
2
120
60
1.5
150
30
1
0.5
180
0
SPEECH
100 Hz
500 Hz
1000 Hz
2000 Hz
3000 Hz
4000 Hz
210
330
240
300
270

Figure 34

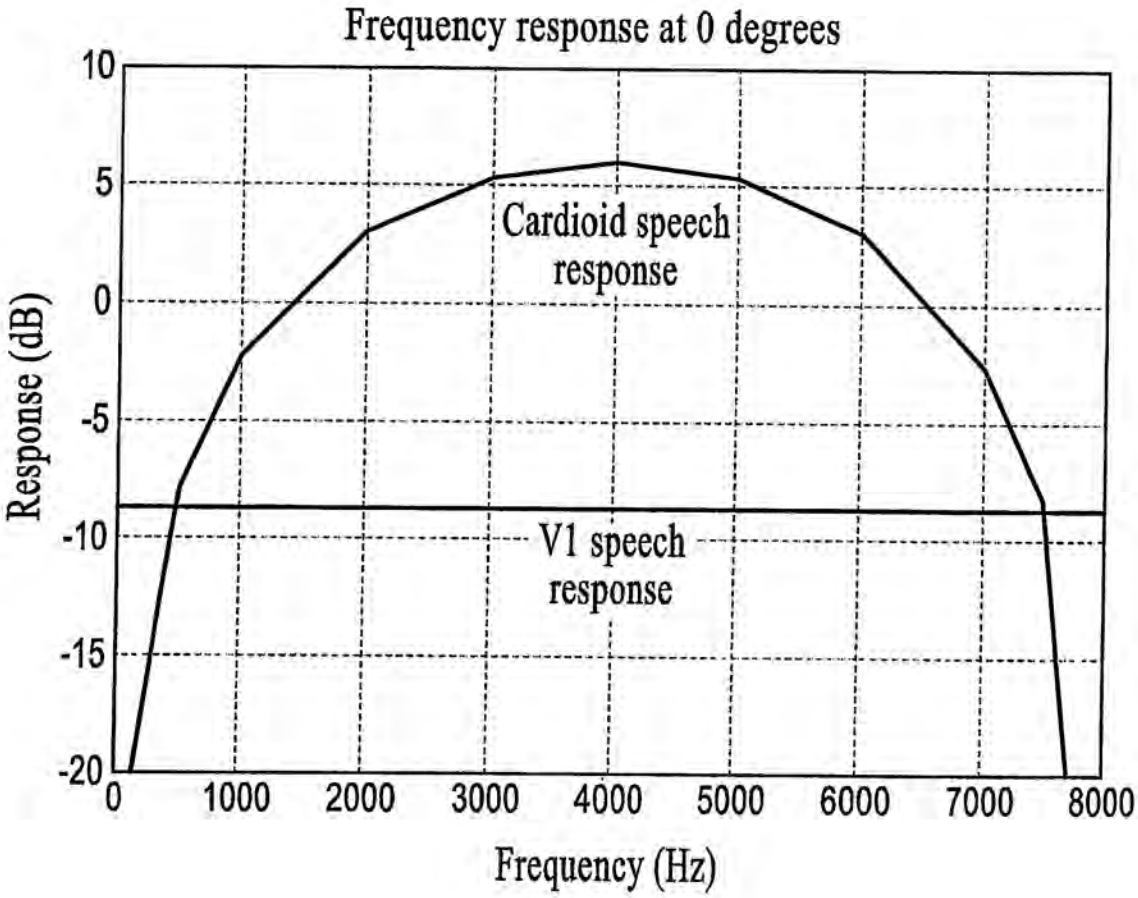
Frequency response at 0 degrees
10
5
0
-5
-10
-15
-20
Response (dB)
Cardioid speech response
V1 speech response
0
1000
2000
3000
4000
5000
6000
7000
8000
Frequency (Hz)

Figure 35

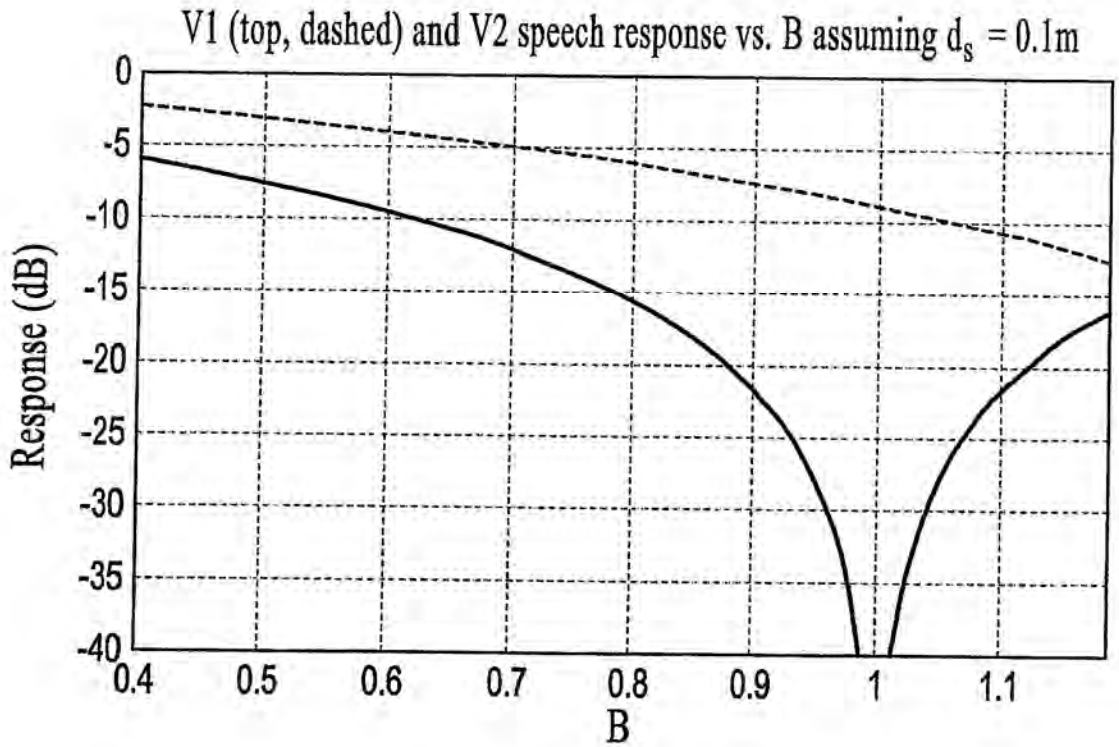

Figure 36

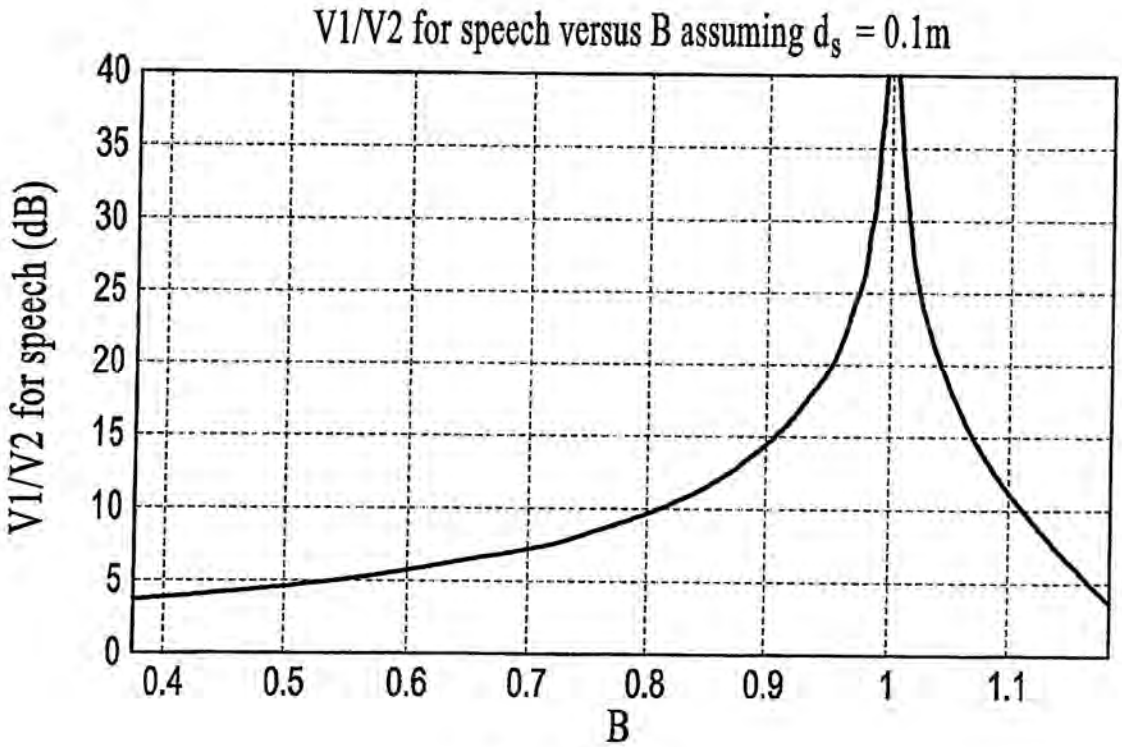

Figure 37

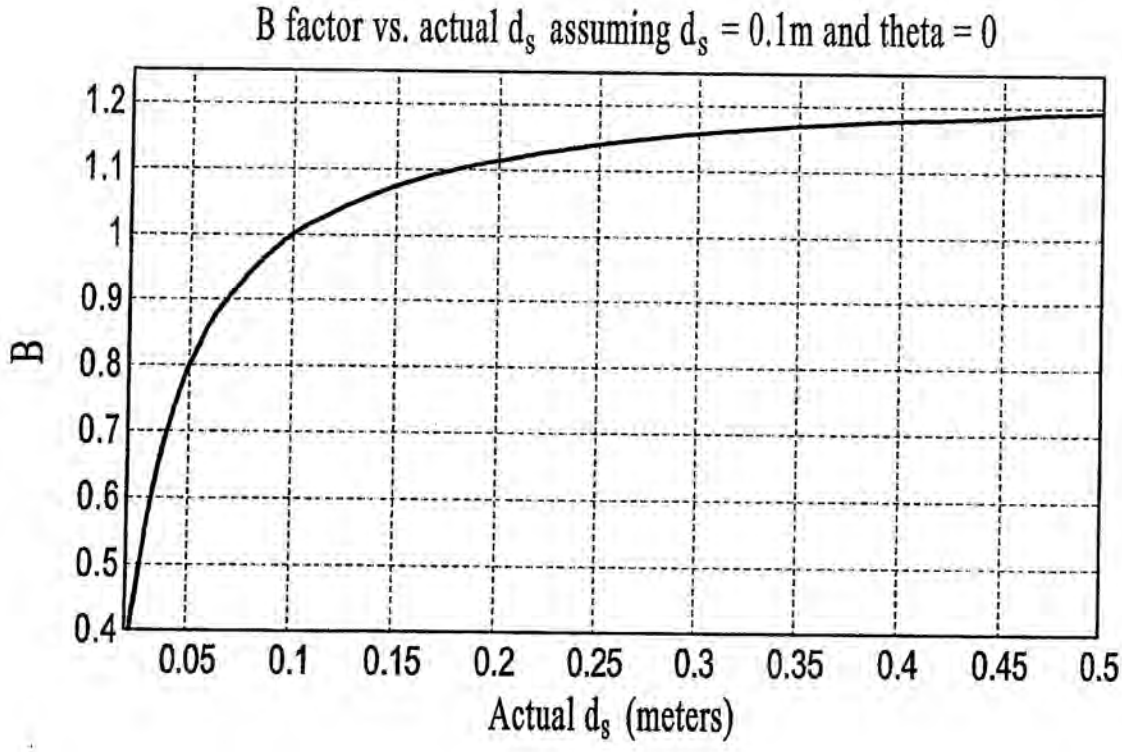

Figure 38

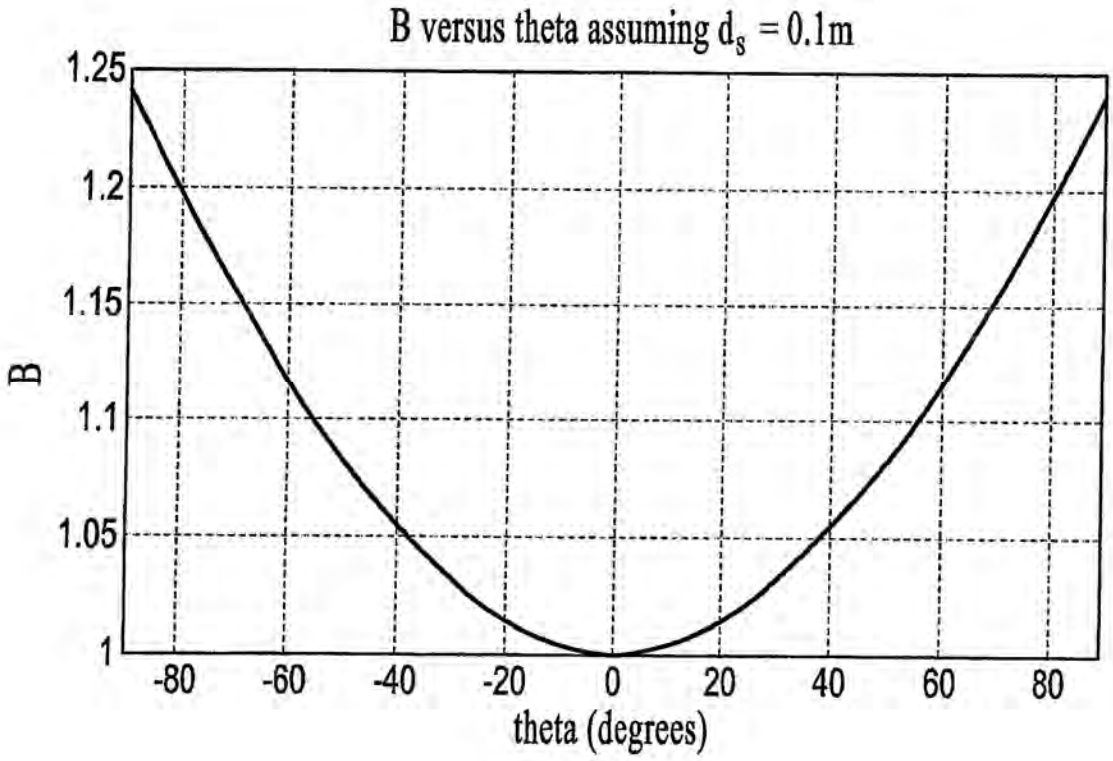

Figure 39

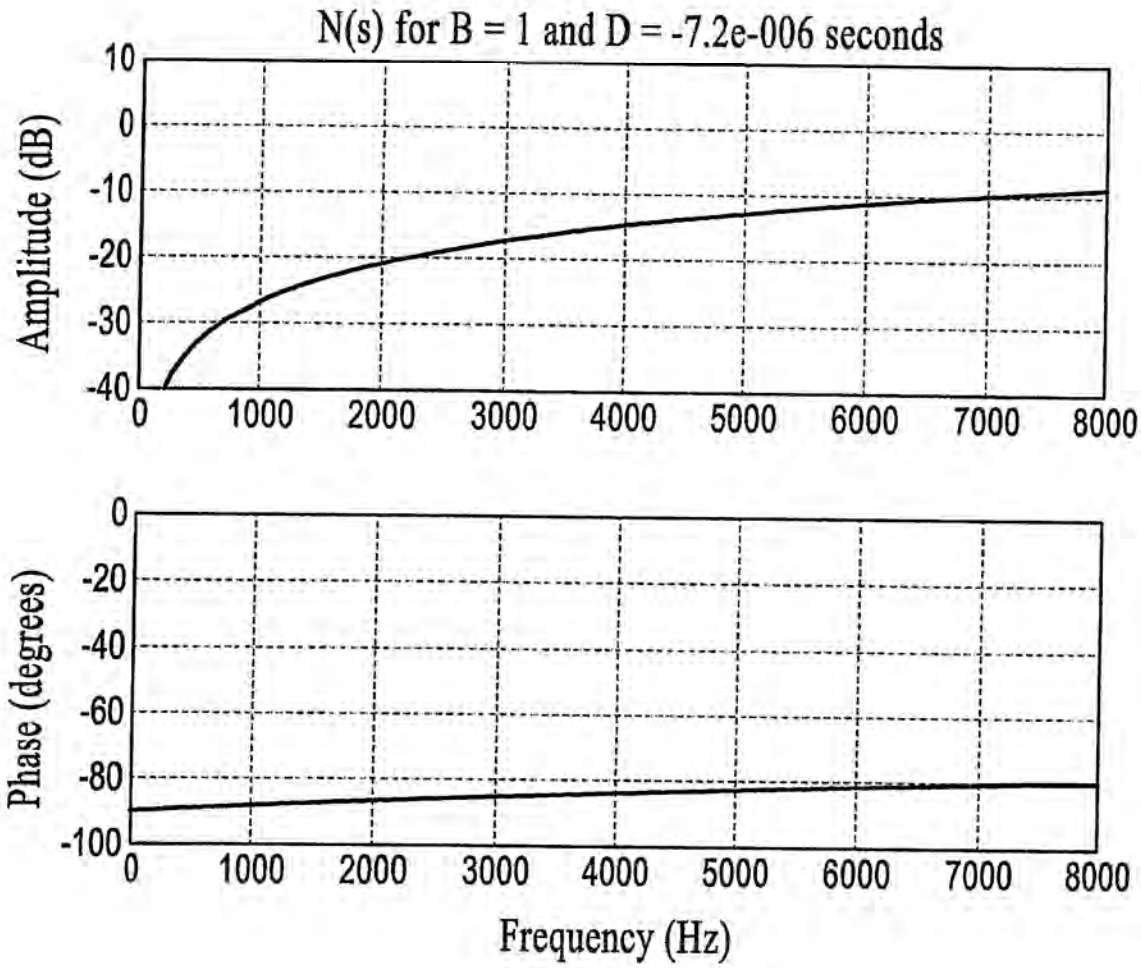
N(s) for B = 1 and D = -7.2e-006 seconds
Amplitude (dB)
10
0
-10
-20
-30
-40
0
1000
2000
3000
4000
5000
6000
7000
8000
Phase (degrees)
0
-20
-40
-60
-80
-100
Frequency (Hz)

Figure 40

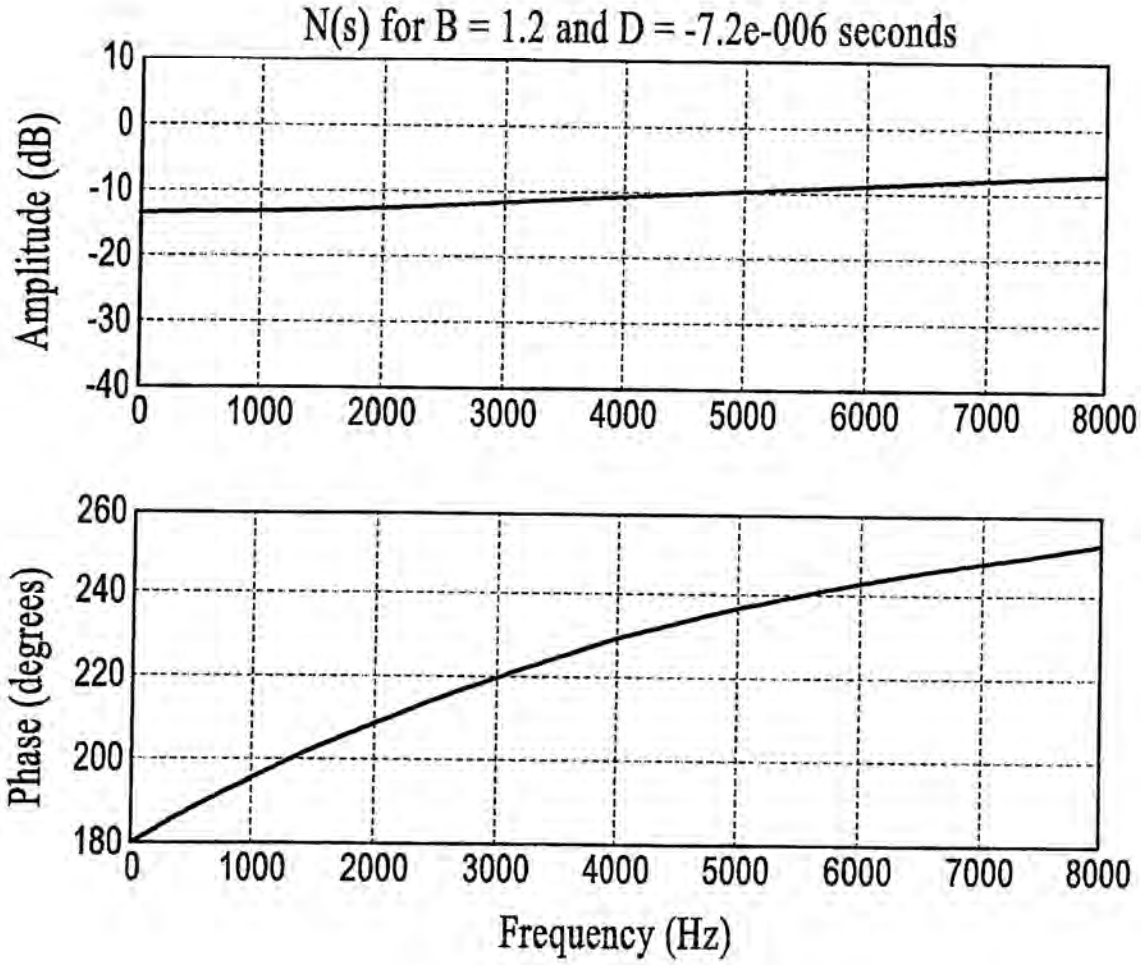
N(s) for B = 1.2 and D = -7.2e-006 seconds
Amplitude (dB)
10
0
-10
-20
-30
-40
0
1000
2000
3000
4000
5000
6000
7000
8000
Phase (degrees)
260
240
220
200
180
Frequency (Hz)

Figure 41

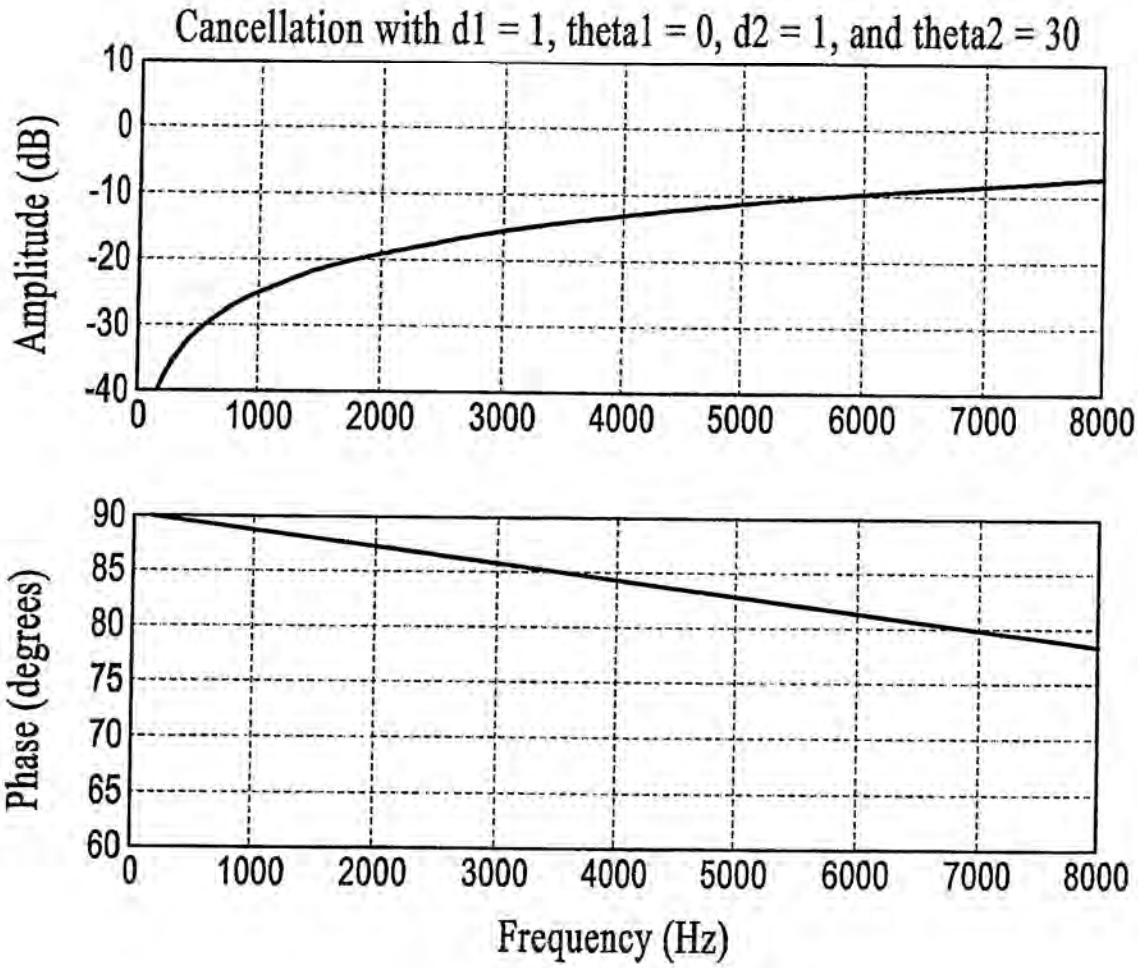
Cancellation with d1 = 1, theta1 = 0, d2 = 1, and theta2 = 30
Amplitude (dB)
10
0
-10
-20
-30
-40
0
1000
2000
3000
4000
5000
6000
7000
8000
Phase (degrees)
90
85
80
75
70
65
60
Frequency (Hz)

Figure 42

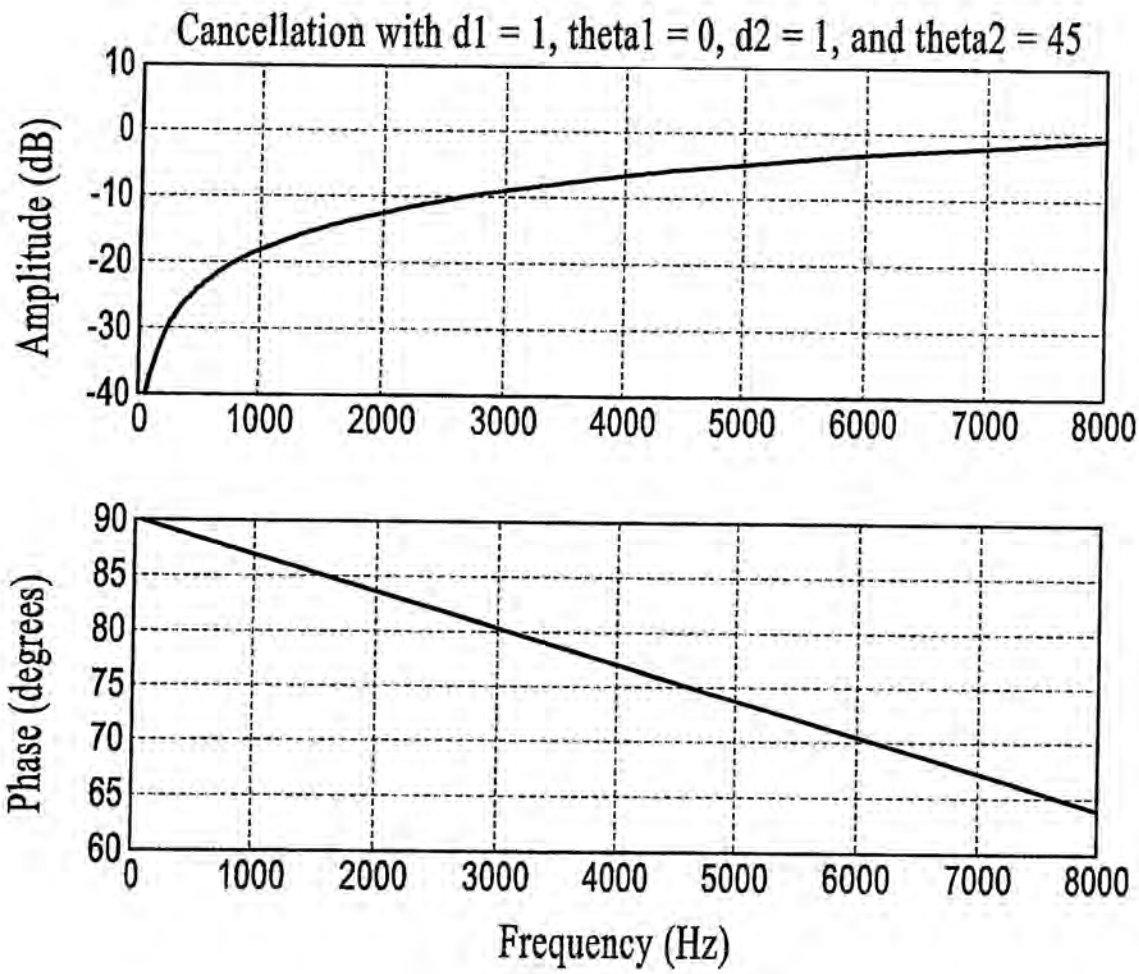
Cancellation with d1 = 1, theta1 = 0, d2 = 1, and theta2 = 45
Amplitude (dB)
10
0
-10
-20
-30
-40
0
1000
2000
3000
4000
5000
6000
7000
8000
Phase (degrees)
90
85
80
75
70
65
60
Frequency (Hz)

Figure 43

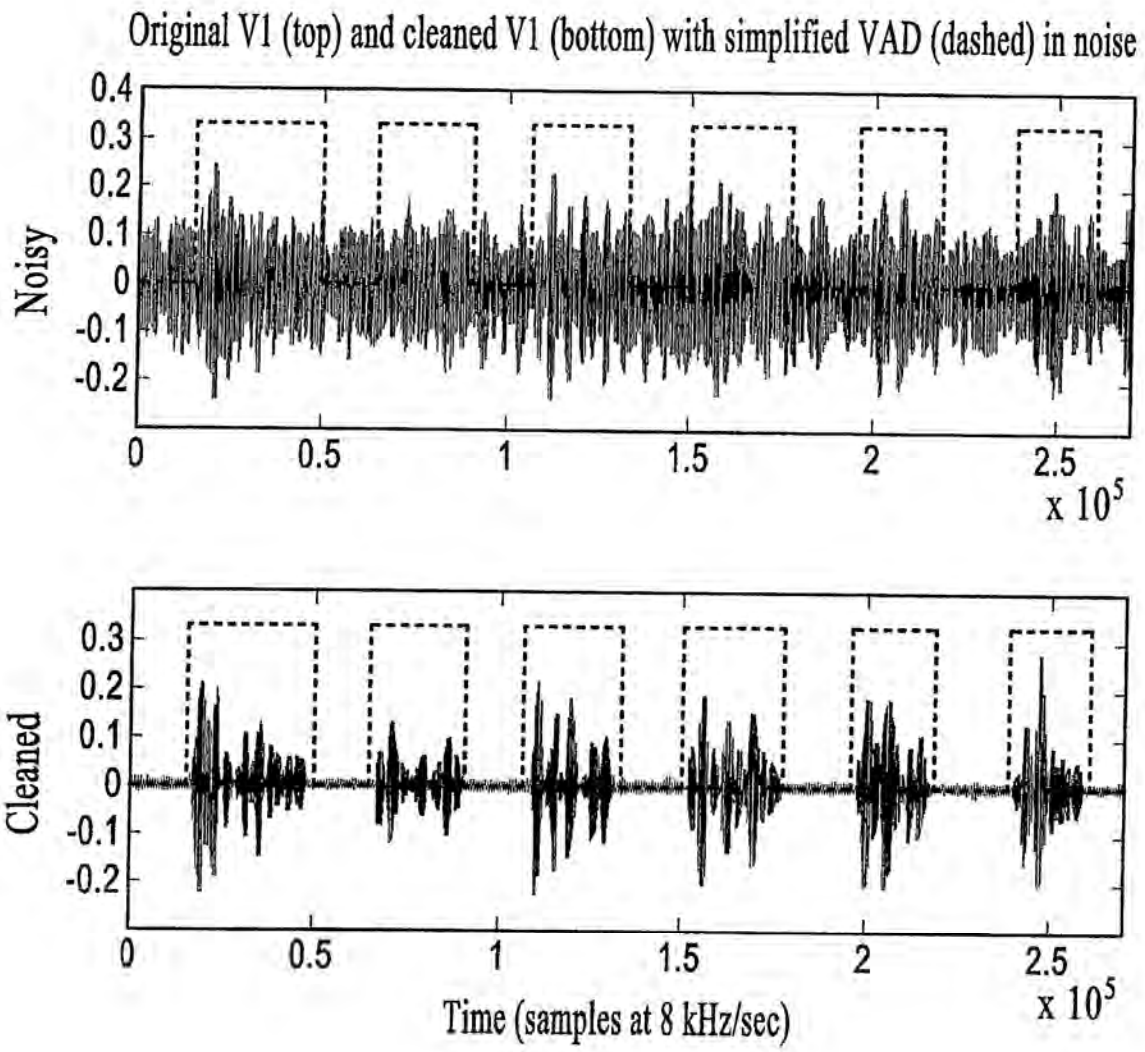
Original V1 (top) and cleaned V1 (bottom) with simplified VAD (dashed) in noise
Noisy
0.4
0.3
0.2
0.1
0
-0.1
-0.2
0
0.5
1
1.5
2
2.5
x 10^5
Cleaned
0.3
0.2
0.1
0
-0.1
-0.2
0
0.5
1
1.5
2
2.5
x 10^5
Time (samples at 8 kHz/sec)

Figure 44

Electronic Patent Application Fee Transmittal

Application Number:	
Filing Date:	
Title of Invention:	Acoustic Voice Activity Detection (AVAD) for Electronic Systems
First Named Inventor/Applicant Name:	Nicolas Petit
Filer:	Richard L. Gregory/Jerry Donnard
Attorney Docket Number:	ALPH.P039

Filed as Large Entity

Utility under 35 USC 111(a) Filing Fees

Description	Fee Code	Quantity	Amount	Sub-Total in USD($)
Basic Filing:				
Utility application filing	1011	1	330	330
Utility Search Fee	1111	1	540	540
Utility Examination Fee	1311	1	220	220
Pages:				
Claims:				
Claims in excess of 20	1202	24	52	1248
Miscellaneous-Filing:				
Petition:				

Description	Fee Code	Quantity	Amount	Sub-Total in USD($)
Patent-Appeals-and-Interference:				
Post-Allowance-and-Post-Issuance:				
Extension-of-Time:				
Miscellaneous:				
		Total in USD ($)		2338

Electronic Acknowledgement Receipt

EFS ID:	6334604
Application Number:	12606140
International Application Number:	
Confirmation Number:	2189
Title of Invention:	Acoustic Voice Activity Detection (AVAD) for Electronic Systems
First Named Inventor/Applicant Name:	Nicolas Petit
Customer Number:	53186
Filer:	Richard L. Gregory/Jerry Donnard
Filer Authorized By:	Richard L. Gregory
Attorney Docket Number:	ALPH.P039
Receipt Date:	26-OCT-2009
Filing Date:	
Time Stamp:	21:05:07
Application Type:	Utility under 35 USC 111(a)

Payment information:

Submitted with Payment	yes
Payment Type	Credit Card
Payment was successfully received in RAM	$2338
RAM confirmation Number	5919
Deposit Account	
Authorized User	

File Listing:

Document Number	Document Description	File Name	File Size(Bytes)/ Message Digest	Multi Part /.zip	Pages (if appl.)

1	Application Data Sheet	ADS_ALPHP039.pdf	1989873 6dd2b85ba06c8aa886d4969c3470dab2288 2847e	no	5
Warnings:					
Information:					
2		Patent_Application_ALPHP039.pdf	9428899 f8cbce1216db8319bffa0d2f7b86196626 0 1bfbe	yes	110

Multipart Description/PDF files in .zip description

Document Description	Start	End
Transmittal of New Application	1	1
Specification	2	64
Claims	65	71
Abstract	72	72
Drawings-only black and white line drawings	73	110

Warnings:					
Information:					
3	Fee Worksheet (PTO-875)	fee-info.pdf	36422 0028806d190ccbcca57c6a6b4ff8dea13b0f 093c	no	2
Warnings:					
Information:					
		Total Files Size (in bytes):	11455194		

This Acknowledgement Receipt evidences receipt on the noted date by the USPTO of the indicated documents, characterized by the applicant, and including page counts, where applicable. It serves as evidence of receipt similar to a Post Card, as described in MPEP 503.

<u>New Applications Under 35 U.S.C. 111</u>
If a new application is being filed and the application includes the necessary components for a filing date (see 37 CFR 1.53(b)-(d) and MPEP 506), a Filing Receipt (37 CFR 1.54) will be issued in due course and the date shown on this Acknowledgement Receipt will establish the filing date of the application.

<u>National Stage of an International Application under 35 U.S.C. 371</u>
If a timely submission to enter the national stage of an international application is compliant with the conditions of 35 U.S.C. 371 and other applicable requirements a Form PCT/DO/EO/903 indicating acceptance of the application as a national stage submission under 35 U.S.C. 371 will be issued in addition to the Filing Receipt, in due course.

<u>New International Application Filed with the USPTO as a Receiving Office</u>
If a new international application is being filed and the international application includes the necessary components for an international filing date (see PCT Article 11 and MPEP 1810), a Notification of the International Application Number and of the International Filing Date (Form PCT/RO/105) will be issued in due course, subject to prescriptions concerning national security, and the date shown on this Acknowledgement Receipt will establish the international filing date of the application.

Under the Paperwork Reduction Act of 1995, no persons are required to respond to a collection of information unless it contains a valid OMB control number

Application Data Sheet 37 CFR 1.76	Attorney Docket Number	ALPH.P039
	Application Number	
Title of Invention	Acoustic Voice Activity Detection (AVAD) for Electronic Systems	

The application data sheet is part of the provisional or nonprovisional application for which it is being submitted. The following form contains the bibliographic data arranged in a format specified by the United States Patent and Trademark Office as outlined in 37 CFR 1.76.
This document may be completed electronically and submitted to the Office in electronic format using the Electronic Filing System (EFS) or the document may be printed and included in a paper filed application.

Secrecy Order 37 CFR 5.2

☐ Portions or all of the application associated with this Application Data Sheet may fall under a Secrecy Order pursuant to 37 CFR 5.2 (Paper filers only. Applications that fall under Secrecy Order may not be filed electronically.)

Applicant Information:

Applicant 1 Remove

Applicant Authority	◉ Inventor	○ Legal Representative under 35 U.S.C. 117	○ Party of Interest under 35 U.S.C. 118

Prefix	Given Name	Middle Name	Family Name	Suffix
	Nicolas		Petit	

Residence Information (Select One)	◉ US Residency	○ Non US Residency	○ Active US Military Service

City	San Francisco	State/Province	CA	Country of Residence i	US

Citizenship under 37 CFR 1.41(b) i	BE

Mailing Address of Applicant:

Address 1	99 Rhode Island Street, 3rd Floor
Address 2	

City	San Francisco	State/Province	CA

Postal Code	94103	Country i	US

Applicant 2 Remove

Applicant Authority	◉ Inventor	○ Legal Representative under 35 U.S.C. 117	○ Party of Interest under 35 U.S.C. 118

Prefix	Given Name	Middle Name	Family Name	Suffix
	Gregory		Burnett	

Residence Information (Select One)	◉ US Residency	○ Non US Residency	○ Active US Military Service

City	Dodge Center	State/Province	MN	Country of Residence i	US

Citizenship under 37 CFR 1.41(b) i	US

Mailing Address of Applicant:

Address 1	99 Rhode Island Street, 3rd Floor
Address 2	

City	San Francisco	State/Province	CA

Postal Code	94103	Country i	US

Applicant 3 Remove

Applicant Authority	◉ Inventor	○ Legal Representative under 35 U.S.C. 117	○ Party of Interest under 35 U.S.C. 118

Prefix	Given Name	Middle Name	Family Name	Suffix
	Zhinian		Jing	

Residence Information (Select One)	◉ US Residency	○ Non US Residency	○ Active US Military Service

City	San Francisco	State/Province	CA	Country of Residence i	US

Under the Paperwork Reduction Act of 1995, no persons are required to respond to a collection of information unless it contains a valid OMB control number.

Application Data Sheet 37 CFR 1.76	Attorney Docket Number	ALPH.P039
	Application Number	
Title of Invention	Acoustic Voice Activity Detection (AVAD) for Electronic Systems	

Citizenship under 37 CFR 1.41(b) [i]	US		
Mailing Address of Applicant:			
Address 1	99 Rhode Island Street, 3rd Floor		
Address 2			
City	San Francisco	**State/Province**	CA
Postal Code	94103	**Country**[i]	US
All Inventors Must Be Listed - Additional Inventor Information blocks may be generated within this form by selecting the **Add** button.			Add

Correspondence Information:

Enter either Customer Number or complete the Correspondence Information section below. For further information see 37 CFR 1.33(a).			
☐ **An Address is being provided for the correspondence Information of this application.**			
Customer Number	53186		
Email Address	rgregory@csgip.com	Add Email	Remove Email

Application Information:

Title of the Invention	Acoustic Voice Activity Detection (AVAD) for Electronic Systems		
Attorney Docket Number	ALPH.P039	**Small Entity Status Claimed**	☐
Application Type	Nonprovisional		
Subject Matter	Utility		
Suggested Class (if any)		**Sub Class (if any)**	
Suggested Technology Center (if any)			
Total Number of Drawing Sheets (if any)	38	**Suggested Figure for Publication (if any)**	

Publication Information:

☐	Request Early Publication (Fee required at time of Request 37 CFR 1.219)
☐	**Request Not to Publish.** I hereby request that the attached application not be published under 35 U.S. C. 122(b) and certify that the invention disclosed in the attached application **has not and will not** be the subject of an application filed in another country, or under a multilateral international agreement, that requires publication at eighteen months after filing.

Representative Information:

Representative information should be provided for all practitioners having a power of attorney in the application. Providing this information in the Application Data Sheet does not constitute a power of attorney in the application (see 37 CFR 1.32).
Enter either Customer Number or complete the Representative Name section below. If both sections are completed the Customer Number will be used for the Representative Information during processing.

Please Select One:	◉ Customer Number	◯ US Patent Practitioner	◯ Limited Recognition (37 CFR 11.9)

Under the Paperwork Reduction Act of 1995, no persons are required to respond to a collection of information unless it contains a valid OMB control number.

Application Data Sheet 37 CFR 1.76	Attorney Docket Number	ALPH.P039
	Application Number	
Title of Invention	Acoustic Voice Activity Detection (AVAD) for Electronic Systems	

Customer Number	53186

Domestic Benefit/National Stage Information:

This section allows for the applicant to either claim benefit under 35 U.S.C. 119(e), 120, 121, or 365(c) or indicate National Stage entry from a PCT application. Providing this information in the application data sheet constitutes the specific reference required by 35 U.S.C. 119(e) or 120, and 37 CFR 1.78(a)(2) or CFR 1.78(a)(4), and need not otherwise be made part of the specification.

Prior Application Status			Remove
Application Number	Continuity Type	Prior Application Number	Filing Date (YYYY-MM-DD)
	non provisional of	61108426	2008-10-24
Prior Application Status			Remove
Application Number	Continuity Type	Prior Application Number	Filing Date (YYYY-MM-DD)
	Continuation in part of	11805987	2007-05-25
Prior Application Status			Remove
Application Number	Continuity Type	Prior Application Number	Filing Date (YYYY-MM-DD)
	Continuation in part of	12139333	2008-06-13

Additional Domestic Benefit/National Stage Data may be generated within this form by selecting the **Add** button. Add

Foreign Priority Information:

This section allows for the applicant to claim benefit of foreign priority and to identify any prior foreign application for which priority is not claimed. Providing this information in the application data sheet constitutes the claim for priority as required by 35 U.S.C. 119(b) and 37 CFR 1.55(a).

Remove

Application Number	Country [i]	Parent Filing Date (YYYY-MM-DD)	Priority Claimed
			◉ Yes ◯ No

Additional Foreign Priority Data may be generated within this form by selecting the **Add** button. Add

Assignee Information:

Providing this information in the application data sheet does not substitute for compliance with any requirement of part 3 of Title 37 of the CFR to have an assignment recorded in the Office.

Assignee 1 Remove

If the Assignee is an Organization check here. ☐

Prefix	**Given Name**	Middle Name	**Family Name**	Suffix

Under the Paperwork Reduction Act of 1995, no persons are required to respond to a collection of information unless it contains a valid OMB control number.

Application Data Sheet 37 CFR 1.76	Attorney Docket Number	ALPH.P039
	Application Number	
Title of Invention	Acoustic Voice Activity Detection (AVAD) for Electronic Systems	

Mailing Address Information:			
Address 1			
Address 2			
City		**State/Province**	
Country i		Postal Code	
Phone Number		Fax Number	
Email Address			
Additional Assignee Data may be generated within this form by selecting the **Add** button.			Add

Signature:

A signature of the applicant or representative is required in accordance with 37 CFR 1.33 and 10.18. Please see 37 CFR 1.4(d) for the form of the signature.					
Signature	/Richard L. Gregory, Jr./			Date (YYYY-MM-DD)	2009-10-26
First Name	Richard	Last Name	Gregory	Registration Number	42607

This collection of information is required by 37 CFR 1.76. The information is required to obtain or retain a benefit by the public which is to file (and by the USPTO to process) an application. Confidentiality is governed by 35 U.S.C. 122 and 37 CFR 1.14. This collection is estimated to take 23 minutes to complete, including gathering, preparing, and submitting the completed application data sheet form to the USPTO. Time will vary depending upon the individual case. Any comments on the amount of time you require to complete this form and/or suggestions for reducing this burden, should be sent to the Chief Information Officer, U.S. Patent and Trademark Office, U.S. Department of Commerce, P.O. Box 1450, Alexandria, VA 22313-1450. DO NOT SEND FEES OR COMPLETED FORMS TO THIS ADDRESS. **SEND TO: Commissioner for Patents, P.O. Box 1450, Alexandria, VA 22313-1450.**

Privacy Act Statement

The Privacy Act of 1974 (P.L. 93-579) requires that you be given certain information in connection with your submission of the attached form related to a patent application or patent. Accordingly, pursuant to the requirements of the Act, please be advised that: (1) the general authority for the collection of this information is 35 U.S.C. 2(b)(2); (2) furnishing of the information solicited is voluntary; and (3) the principal purpose for which the information is used by the U.S. Patent and Trademark Office is to process and/or examine your submission related to a patent application or patent. If you do not furnish the requested information, the U.S. Patent and Trademark Office may not be able to process and/or examine your submission, which may result in termination of proceedings or abandonment of the application or expiration of the patent.

The information provided by you in this form will be subject to the following routine uses:

1. The information on this form will be treated confidentially to the extent allowed under the Freedom of Information Act (5 U.S.C. 552) and the Privacy Act (5 U.S.C. 552a). Records from this system of records may be disclosed to the Department of Justice to determine whether the Freedom of Information Act requires disclosure of these records.

2. A record from this system of records may be disclosed, as a routine use, in the course of presenting evidence to a court, magistrate, or administrative tribunal, including disclosures to opposing counsel in the course of settlement negotiations.

3. A record in this system of records may be disclosed, as a routine use, to a Member of Congress submitting a request involving an individual, to whom the record pertains, when the individual has requested assistance from the Member with respect to the subject matter of the record.

4. A record in this system of records may be disclosed, as a routine use, to a contractor of the Agency having need for the information in order to perform a contract. Recipients of information shall be required to comply with the requirements of the Privacy Act of 1974, as amended, pursuant to 5 U.S.C. 552a(m).

5. A record related to an International Application filed under the Patent Cooperation Treaty in this system of records may be disclosed, as a routine use, to the International Bureau of the World Intellectual Property Organization, pursuant to the Patent Cooperation Treaty.

6. A record in this system of records may be disclosed, as a routine use, to another federal agency for purposes of National Security review (35 U.S.C. 181) and for review pursuant to the Atomic Energy Act (42 U.S.C. 218(c)).

7. A record from this system of records may be disclosed, as a routine use, to the Administrator, General Services, or his/her designee, during an inspection of records conducted by GSA as part of that agency's responsibility to recommend improvements in records management practices and programs, under authority of 44 U.S.C. 2904 and 2906. Such disclosure shall be made in accordance with the GSA regulations governing inspection of records for this purpose, and any other relevant (i.e., GSA or Commerce) directive. Such disclosure shall not be used to make determinations about individuals.

8. A record from this system of records may be disclosed, as a routine use, to the public after either publication of the application pursuant to 35 U.S.C. 122(b) or issuance of a patent pursuant to 35 U.S.C. 151. Further, a record may be disclosed, subject to the limitations of 37 CFR 1.14, as a routine use, to the public if the record was filed in an application which became abandoned or in which the proceedings were terminated and which application is referenced by either a published application, an application open to public inspections or an issued patent.

9. A record from this system of records may be disclosed, as a routine use, to a Federal, State, or local law enforcement agency, if the USPTO becomes aware of a violation or potential violation of law or regulation.

Filing Date: 10/26/09

Approved for use through 7/31/2006. OMB 0651-0032
U.S. Patent and Trademark Office; U.S. DEPARTMENT OF COMMERCE

Under the Paperwork Reduction Act of 1995, no persons are required to respond to a collection of information unless it displays a valid OMB control number.

PATENT APPLICATION FEE DETERMINATION RECORD

Substitute for Form PTO-875

12/606,140

APPLICATION AS FILED – PART I

FOR	(Column 1) NUMBER FILED	(Column 2) NUMBER EXTRA	SMALL ENTITY RATE ($)	SMALL ENTITY FEE ($)	OR	OTHER THAN SMALL ENTITY RATE ($)	OTHER THAN SMALL ENTITY FEE ($)
BASIC FEE (37 CFR 1.16(a), (b), or (c))	N/A	N/A	N/A			N/A	330
SEARCH FEE (37 CFR 1.16(k), (i), or (m))	N/A	N/A	N/A			N/A	540
EXAMINATION FEE (37 CFR 1.16(o), (p), or (q))	N/A	N/A	N/A			N/A	220
TOTAL CLAIMS (37 CFR 1.16(i))	44 minus 20 =	24	X$ 26		OR	X$52	1248
INDEPENDENT CLAIMS (37 CFR 1.16(h))	3 minus 3 =	* 0	X$110			X$220	0
APPLICATION SIZE FEE (37 CFR 1.16(s))							
MULTIPLE DEPENDENT CLAIM PRESENT (37 CFR 1.16(j))			195			390	
			TOTAL	0		TOTAL	2338

* If the difference in column 1 is less than zero, enter "0" in column 2.

APPLICATION AS AMENDED – PART II

AMENDMENT A

	(Column 1) CLAIMS REMAINING AFTER AMENDMENT		(Column 2) HIGHEST NUMBER PREVIOUSLY PAID FOR	(Column 3) PRESENT EXTRA	SMALL ENTITY RATE ($)	SMALL ENTITY ADDI-TIONAL FEE ($)	OR	OTHER THAN SMALL ENTITY RATE ($)	OTHER THAN SMALL ENTITY ADDI-TIONAL FEE ($)
Total (37 CFR 1.16(i))	*	Minus	**	=	x =		OR	x =	
Independent (37 CFR 1.16(h))	*	Minus	***	=	x =		OR	x =	
Application Size Fee (37 CFR 1.16(s))									
FIRST PRESENTATION OF MULTIPLE DEPENDENT CLAIM (37 CFR 1.16(j))					N/A		OR	N/A	
					TOTAL ADD'T FEE		OR	TOTAL ADD'T FEE	

AMENDMENT B

	(Column 1) CLAIMS REMAINING AFTER AMENDMENT		(Column 2) HIGHEST NUMBER PREVIOUSLY PAID FOR	(Column 3) PRESENT EXTRA	RATE ($)	ADDI-TIONAL FEE ($)	OR	RATE ($)	ADDI-TIONAL FEE ($)
Total (37 CFR 1.16(i))	*	Minus	**	=	x =		OR	x =	
Independent (37 CFR 1.18(h))	*	Minus	***	=	x =		OR	x =	
Application Size Fee (37 CFR 1.16(s))									
FIRST PRESENTATION OF MULTIPLE DEPENDENT CLAIM (37 CFR 1.16(j))					N/A		OR	N/A	
					TOTAL ADD'T FEE		OR	TOTAL ADD'T FEE	

* If the entry in column 1 is less than the entry in column 2, write "0" in column 3.
** If the "Highest Number Previously Paid For" IN THIS SPACE is less than 20, enter "20".
*** If the "Highest Number Previously Paid For" IN THIS SPACE is less than 3, enter "3".
The "Highest Number Previously Paid For" (Total or Independent) is the highest number found in the appropriate box in column 1.

This collection of information is required by 37 CFR 1.16. The information is required to obtain or retain a benefit by the public which is to file (and by the USPTO to process) an application. Confidentiality is governed by 35 U.S.C. 122 and 37 CFR 1.14. This collection is estimated to take 12 minutes to complete, including gathering, preparing, and submitting the completed application form to the USPTO. Time will vary depending upon the individual case. Any comments on the amount of time you require to complete this form and/or suggestions for reducing this burden, should be sent to the Chief Information Officer, U.S. Paten and Trademark Office, U.S. Department of Commerce, P.O. Box 1450, Alexandria, VA 22313-1450. DO NOT SEND FEES OR COMPLETED FORMS TO THIS ADDRESS. **SEND TO: Commissioner for Patents, P.O. Box 1450, Alexandria, VA 22313-1450.**

If you need assistance in completing the form, call 1-800-PTO-9199 and select option 2.

UNITED STATES PATENT AND TRADEMARK OFFICE

UNITED STATES DEPARTMENT OF COMMERCE
United States Patent and Trademark Office
Address: COMMISSIONER FOR PATENTS
P.O. Box 1450
Alexandria, Virginia 22313-1450
www.uspto.gov

APPLICATION NUMBER	FILING or 371(c) DATE	GRP ART UNIT	FIL FEE REC'D	ATTY.DOCKET.NO	TOT CLAIMS	IND CLAIMS
12/606,140	10/26/2009	2614	2338	ALPH.P039	44	3

CONFIRMATION NO. 2189

53186
COURTNEY STANIFORD & GREGORY LLP
10001 N. De Anza Blvd., Suite 300
Cupertino, CA 95014

FILING RECEIPT

OC000000038694045

Date Mailed: 11/12/2009

Receipt is acknowledged of this non-provisional patent application. The application will be taken up for examination in due course. Applicant will be notified as to the results of the examination. Any correspondence concerning the application must include the following identification information: the U.S. APPLICATION NUMBER, FILING DATE, NAME OF APPLICANT, and TITLE OF INVENTION. Fees transmitted by check or draft are subject to collection. Please verify the accuracy of the data presented on this receipt. **If an error is noted on this Filing Receipt, please submit a written request for a Filing Receipt Correction. Please provide a copy of this Filing Receipt with the changes noted thereon. If you received a "Notice to File Missing Parts" for this application, please submit any corrections to this Filing Receipt with your reply to the Notice. When the USPTO processes the reply to the Notice, the USPTO will generate another Filing Receipt incorporating the requested corrections**

Applicant(s)

Nicolas Petit, San Francisco, CA;
Gregory Burnett, Dodge Center, MN;
Zhinian Jing, San Francisco, CA;

Power of Attorney: None

Domestic Priority data as claimed by applicant

This appln claims benefit of 61/108,426 10/24/2008
and is a CIP of 11/805,987 05/25/2007
and is a CIP of 12/139,333 06/13/2008

Foreign Applications

If Required, Foreign Filing License Granted: 11/09/2009

The country code and number of your priority application, to be used for filing abroad under the Paris Convention, is **US 12/606,140**

Projected Publication Date: To Be Determined - pending completion of Missing Parts

Non-Publication Request: No

Early Publication Request: No

Title

Acoustic Voice Activity Detection (AVAD) for Electronic Systems

Preliminary Class

381

PROTECTING YOUR INVENTION OUTSIDE THE UNITED STATES

Since the rights granted by a U.S. patent extend only throughout the territory of the United States and have no effect in a foreign country, an inventor who wishes patent protection in another country must apply for a patent in a specific country or in regional patent offices. Applicants may wish to consider the filing of an international application under the Patent Cooperation Treaty (PCT). An international (PCT) application generally has the same effect as a regular national patent application in each PCT-member country. The PCT process **simplifies** the filing of patent applications on the same invention in member countries, but **does not result** in a grant of "an international patent" and does not eliminate the need of applicants to file additional documents and fees in countries where patent protection is desired.

Almost every country has its own patent law, and a person desiring a patent in a particular country must make an application for patent in that country in accordance with its particular laws. Since the laws of many countries differ in various respects from the patent law of the United States, applicants are advised to seek guidance from specific foreign countries to ensure that patent rights are not lost prematurely.

Applicants also are advised that in the case of inventions made in the United States, the Director of the USPTO must issue a license before applicants can apply for a patent in a foreign country. The filing of a U.S. patent application serves as a request for a foreign filing license. The application's filing receipt contains further information and guidance as to the status of applicant's license for foreign filing.

Applicants may wish to consult the USPTO booklet, "General Information Concerning Patents" (specifically, the section entitled "Treaties and Foreign Patents") for more information on timeframes and deadlines for filing foreign patent applications. The guide is available either by contacting the USPTO Contact Center at 800-786-9199, or it can be viewed on the USPTO website at http://www.uspto.gov/web/offices/pac/doc/general/index.html.

For information on preventing theft of your intellectual property (patents, trademarks and copyrights), you may wish to consult the U.S. Government website, http://www.stopfakes.gov. Part of a Department of Commerce initiative, this website includes self-help "toolkits" giving innovators guidance on how to protect intellectual property in specific countries such as China, Korea and Mexico. For questions regarding patent enforcement issues, applicants may call the U.S. Government hotline at 1-866-999-HALT (1-866-999-4158).

LICENSE FOR FOREIGN FILING UNDER

Title 35, United States Code, Section 184

Title 37, Code of Federal Regulations, 5.11 & 5.15

GRANTED

The applicant has been granted a license under 35 U.S.C. 184, if the phrase "IF REQUIRED, FOREIGN FILING LICENSE GRANTED" followed by a date appears on this form. Such licenses are issued in all applications where the conditions for issuance of a license have been met, regardless of whether or not a license may be required as

set forth in 37 CFR 5.15. The scope and limitations of this license are set forth in 37 CFR 5.15(a) unless an earlier license has been issued under 37 CFR 5.15(b). The license is subject to revocation upon written notification. The date indicated is the effective date of the license, unless an earlier license of similar scope has been granted under 37 CFR 5.13 or 5.14.

This license is to be retained by the licensee and may be used at any time on or after the effective date thereof unless it is revoked. This license is automatically transferred to any related applications(s) filed under 37 CFR 1.53(d). This license is not retroactive.

The grant of a license does not in any way lessen the responsibility of a licensee for the security of the subject matter as imposed by any Government contract or the provisions of existing laws relating to espionage and the national security or the export of technical data. Licensees should apprise themselves of current regulations especially with respect to certain countries, of other agencies, particularly the Office of Defense Trade Controls, Department of State (with respect to Arms, Munitions and Implements of War (22 CFR 121-128)); the Bureau of Industry and Security, Department of Commerce (15 CFR parts 730-774); the Office of Foreign AssetsControl, Department of Treasury (31 CFR Parts 500+) and the Department of Energy.

NOT GRANTED

No license under 35 U.S.C. 184 has been granted at this time, if the phrase "IF REQUIRED, FOREIGN FILING LICENSE GRANTED" DOES NOT appear on this form. Applicant may still petition for a license under 37 CFR 5.12, if a license is desired before the expiration of 6 months from the filing date of the application. If 6 months has lapsed from the filing date of this application and the licensee has not received any indication of a secrecy order under 35 U.S.C. 181, the licensee may foreign file the application pursuant to 37 CFR 5.15(b).

UNITED STATES PATENT AND TRADEMARK OFFICE

UNITED STATES DEPARTMENT OF COMMERCE
United States Patent and Trademark Office
Address: COMMISSIONER FOR PATENTS
P.O. Box 1450
Alexandria, Virginia 22313-1450
www.uspto.gov

APPLICATION NUMBER	FILING OR 371(C) DATE	FIRST NAMED APPLICANT	ATTY. DOCKET NO./TITLE
12/606,140	10/26/2009	Nicolas Petit	ALPH.P039

CONFIRMATION NO. 2189

53186
COURTNEY STANIFORD & GREGORY LLP
10001 N. De Anza Blvd., Suite 300
Cupertino, CA 95014

FORMALITIES LETTER

OC000000038694046

Date Mailed: 11/12/2009

NOTICE TO FILE MISSING PARTS OF NONPROVISIONAL APPLICATION

FILED UNDER 37 CFR 1.53(b)

Filing Date Granted

Items Required To Avoid Abandonment:

An application number and filing date have been accorded to this application. The item(s) indicated below, however, are missing. Applicant is given **TWO MONTHS** from the date of this Notice within which to file all required items and pay any fees required below to avoid abandonment. Extensions of time may be obtained by filing a petition accompanied by the extension fee under the provisions of 37 CFR 1.136(a).

- The oath or declaration is missing.
  A properly signed oath or declaration in compliance with 37 CFR 1.63, identifying the application by the above Application Number and Filing Date, is required.
  Note: If a petition under 37 CFR 1.47 is being filed, an oath or declaration in compliance with 37 CFR 1.63 signed by all available joint inventors, or if no inventor is available by a party with sufficient proprietary interest, is required.

The application is informal since it does not comply with the regulations for the reason(s) indicated below.

The required item(s) identified below must be timely submitted to avoid abandonment:

- Replacement drawings in compliance with 37 CFR 1.84 and 37 CFR 1.121(d) are required. The drawings submitted are not acceptable because:
  - The drawings have a line quality that is too light to be reproduced (weight of all lines and letters must be heavy enough to permit adequate reproduction) or text that is illegible (reference characters, sheet numbers, and view numbers must be plain and legible) see 37 CFR 1.84(l) and (p)(1)); See Figure(s) 15.

Applicant is cautioned that correction of the above items may cause the specification and drawings page count to exceed 100 pages. If the specification and drawings exceed 100 pages, applicant will need to submit the required application size fee.

The applicant needs to satisfy supplemental fees problems indicated below.

The required item(s) identified below must be timely submitted to avoid abandonment:

- To avoid abandonment, a surcharge (for late submission of filing fee, search fee, examination fee or oath or declaration) as set forth in 37 CFR 1.16(f) of **$130** for a non-small entity, must be submitted with the missing items identified in this notice.

SUMMARY OF FEES DUE:

Total additional fee(s) required for this application is $**130** for a non-small entity.

- $**130** Surcharge.

Replies should be mailed to:

Mail Stop Missing Parts
Commissioner for Patents
P.O. Box 1450
Alexandria VA 22313-1450

Registered users of EFS-Web may alternatively submit their reply to this notice via EFS-Web.
https://sportal.uspto.gov/authenticate/AuthenticateUserLocalEPF.html

For more information about EFS-Web please call the USPTO Electronic Business Center at **1-866-217-9197** or visit our website at http://www.uspto.gov/ebc.

If you are not using EFS-Web to submit your reply, you must include a copy of this notice.

/ldvan/

Office of Data Management, Application Assistance Unit (571) 272-4000, or (571) 272-4200, or 1-888-786-0101

IN THE UNITED STATES PATENT OFFICE

In Re Patent Application of:	)	
	)	
First Named Inventor: Nicolas Petit	)	
	)	Examiner: Not assigned
	)	
Application No. 12/606,140	)	Art Unit: 2614
	)	
Filed: October 26, 2009	)	
	)	
For: ACOUSTIC VOICE ACTIVITY DETECTION (AVAD) FOR ELECTRONIC SYSTEMS	)	
	)	
	)	

Commissioner for Patents
P.O. Box 1450
Alexandria, VA 22313-1450

PRELIMINARY AMENDMENT

Sir:

Please enter the following amendment before examination of this application.

IN THE DRAWINGS

Please amend the drawings as follows.

Please replace the drawings with the REPLACEMENT SHEETS 1-35 enclosed herewith.

REMARKS

Applicants respectfully request entry of the foregoing amendments before examination of the application. Applicants state that no new matter is added by the replacement drawings.

Authorization to Charge Deposit Account

The Commissioner is authorized to charge any additional fees which may be required in connection with this Preliminary Amendment, including petition fees and extension of time fees, to Deposit Account Number 503616 (Attorney Docket Number ALPH.P039).

Respectfully submitted,
Courtney Staniford & Gregory & LLP

Date: January 28, 2010

Richard L. Gregory, Jr.
Reg. No. 42,607

Customer Number 53186
10001 N. De Anza Blvd., Suite 300
Cupertino, CA 95014
Tel: 408-342-1900
Fax: 408-342-1909

IN THE DRAWINGS

Please amend the drawings as follows.

Please replace the drawings with the REPLACEMENT SHEETS 1-35 enclosed herewith.

REMARKS

Applicants respectfully request entry of the foregoing amendments before examination of the application. Applicants state that no new matter is added by the replacement drawings.

Authorization to Charge Deposit Account

The Commissioner is authorized to charge any additional fees which may be required in connection with this Preliminary Amendment, including petition fees and extension of time fees, to Deposit Account Number 503616 (Attorney Docket Number ALPH.P039).

Respectfully submitted,
Courtney Staniford & Gregory & LLP

Date: January 28, 2010

Richard L. Gregory, Jr.
Reg. No. 42,607

Customer Number 53186
10001 N. De Anza Blvd., Suite 300
Cupertino, CA 95014
Tel: 408-342-1900
Fax: 408-342-1909

PTO/SB/22 (01-09)
Approved for use through 02/28/2009. OMB 0651-0031
U.S. Patent and Trademark Office; U.S. DEPARMENT OF COMMERCE
Under the paperwork Reduction Act of 1995, no persons are required to respond to a collection of information unless it displays a valid OMB control number.

PETITION FOR EXTENSION OF TIME UNDER 37 CFR 1.136(a) **FY 2009** ***(Fees pursuant to the Consolidated Appropriations Act, 2005 (H.R. 4818).)***	Docket Number (Optional) ALPH.P039
Application Number 12/606,140	Filed October 26, 2009
For Acoustic Voice Activity Detection (AVAD) for Electronic Systems	
Art Unit 2614	Examiner not yet assigned

This is a request under the provisions of 37 CFR 1.136(a) to extend the period for filing a reply in the above identified application.

The requested extension and fee are as follows (check time period desired and enter the appropriate fee below):

	Fee	Small Entity Fee	
☑ One month (37 CFR 1.17(a)(1))	$130	$65	$ 130
☐ Two months (37 CFR 1.17(a)(2))	$490	$245	$
☐ Three months (37 CFR 1.17(a)(3))	$1110	$555	$
☐ Four months (37 CFR 1.17(a)(4))	$1730	$865	$
☐ Five months (37 CFR 1.17(a)(5))	$2350	$1175	$

☐ Applicant claims small entity status. See 37 CFR 1.27.

☐ A check in the amount of the fee is enclosed.

☑ Payment by credit card.

☐ The Director has already been authorized to charge fees in this application to a Deposit Account.

☐ The Director is hereby authorized to charge any fees which may be required, or credit any overpayment, to Deposit Account Number _____.

WARNING: Information on this form may become public. Credit card information should not be included on this form. Provide credit card information and authorization on PTO-2038.

I am the ☐ applicant/inventor.

☐ assignee of record of the entire interest. See 37 CFR 3.71.
Statement under 37 CFR 3.73(b) is enclosed (Form PTO/SB/96).

☑ attorney or agent of record. Registration Number 42,607

☐ attorney or agent under 37 CFR 1.34.
Registration number if acting under 37 CFR 1.34 _____

/Richard L. Gregory, Jr./	February 1, 2010
Signature	Date
Richard L. Gregory, Jr.	408-342-1900
Typed or printed name	Telephone Number

NOTE: Signatures of all the inventors or assignees of record of the entire interest or their representative(s) are required. Submit multiple forms if more than one signature is required, see below.

☑ Total of 1 forms are submitted.

This collection of information is required by 37 CFR 1.136(a). The information is required to obtain or retain a benefit by the public which is to file (and by the USPTO to process) an application. Confidentiality is governed by 35 U.S.C. 122 and 37 CFR 1.11 and 1.14. This collection is estimated to take 6 minutes to complete, including gathering, preparing, and submitting the completed application form to the USPTO. Time will vary depending upon the individual case. Any comments on the amount of time you require to complete this form and/or suggestions for reducing this burden, should be sent to the Chief Information Officer, U.S. Patent and Trademark Office, U.S. Department of Commerce, P.O. Box 1450, Alexandria, VA 22313-1450. DO NOT SEND FEES OR COMPLETED FORMS TO THIS ADDRESS. **SEND TO: Commissioner for Patents, P.O. Box 1450, Alexandria, VA 22313-1450.**

If you need assistance in completing the form, call 1-800-PTO-9199 and select option 2.

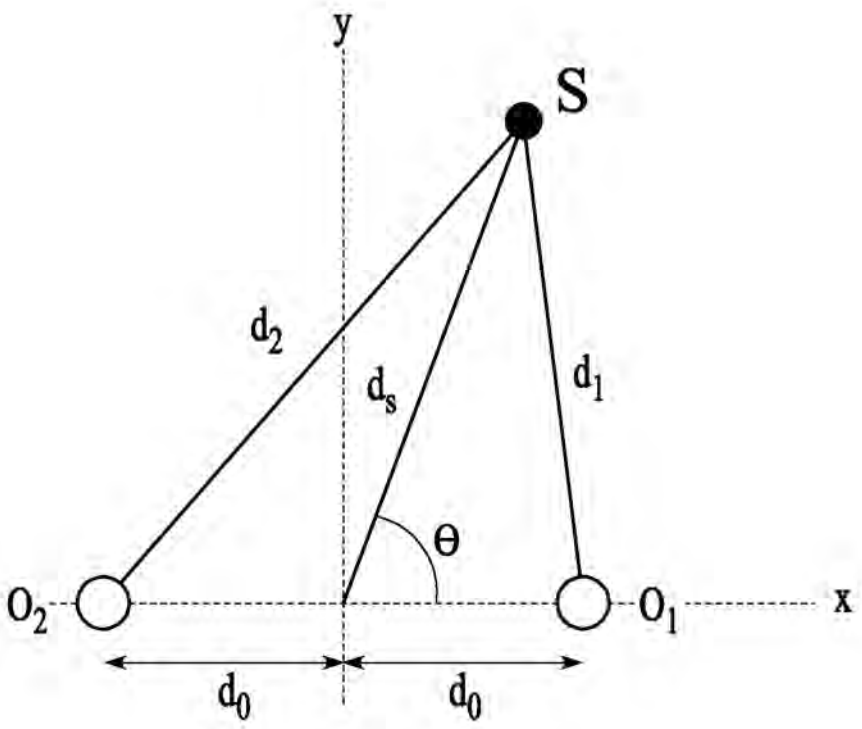
y
S
d2
ds
d1
θ
O2
O1
x
d0
d0

FIG.1

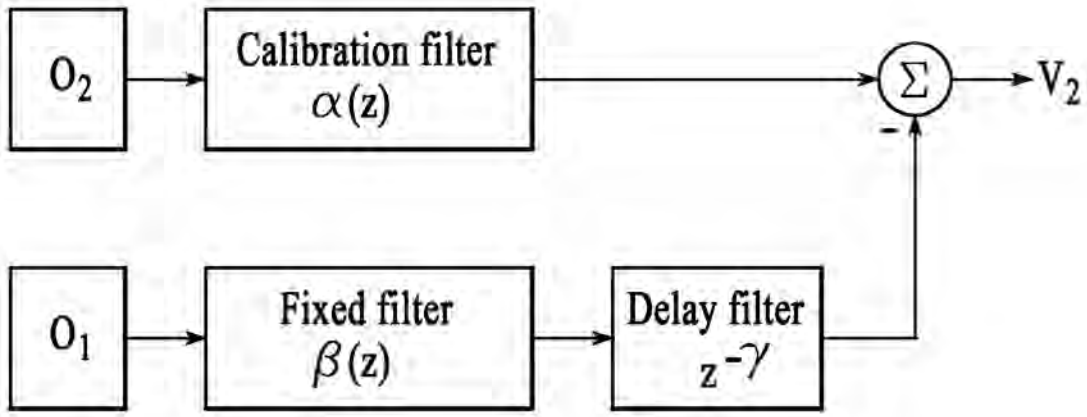
O2
Calibration filter
α(z)
Σ
V2
-
O1
Fixed filter
β(z)
Delay filter
z^-γ

FIG.2

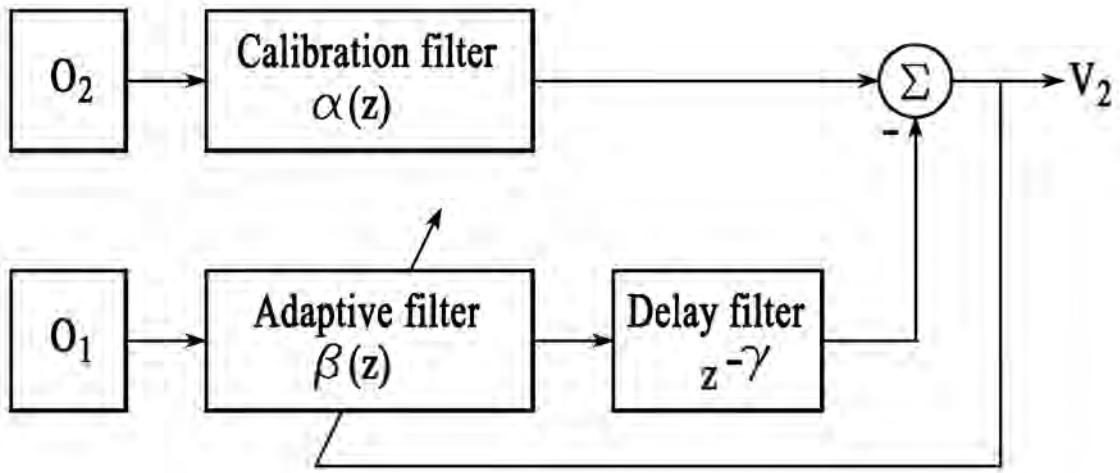
O2
Calibration filter
α(z)
Σ
-
V2
O1
Adaptive filter
β(z)
Delay filter
z -γ

FIG.3

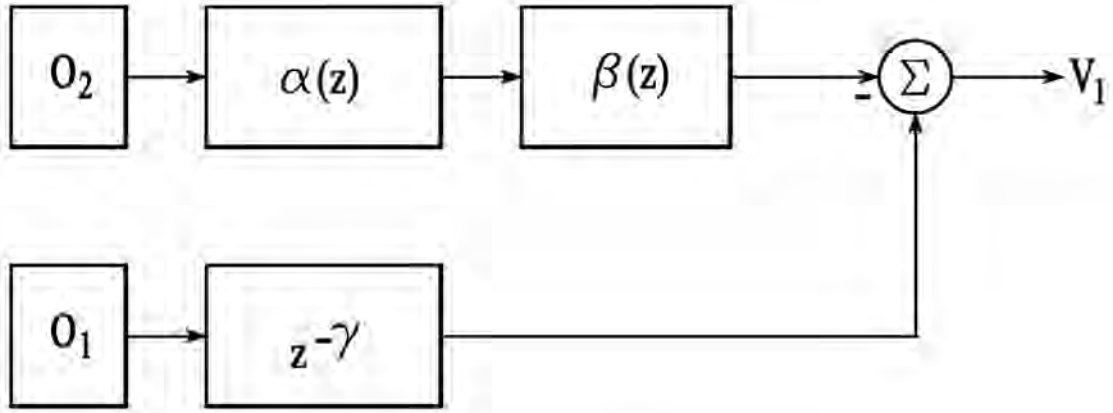
O2
α(z)
β(z)
Σ
-
V1
O1
z -γ

FIG.4

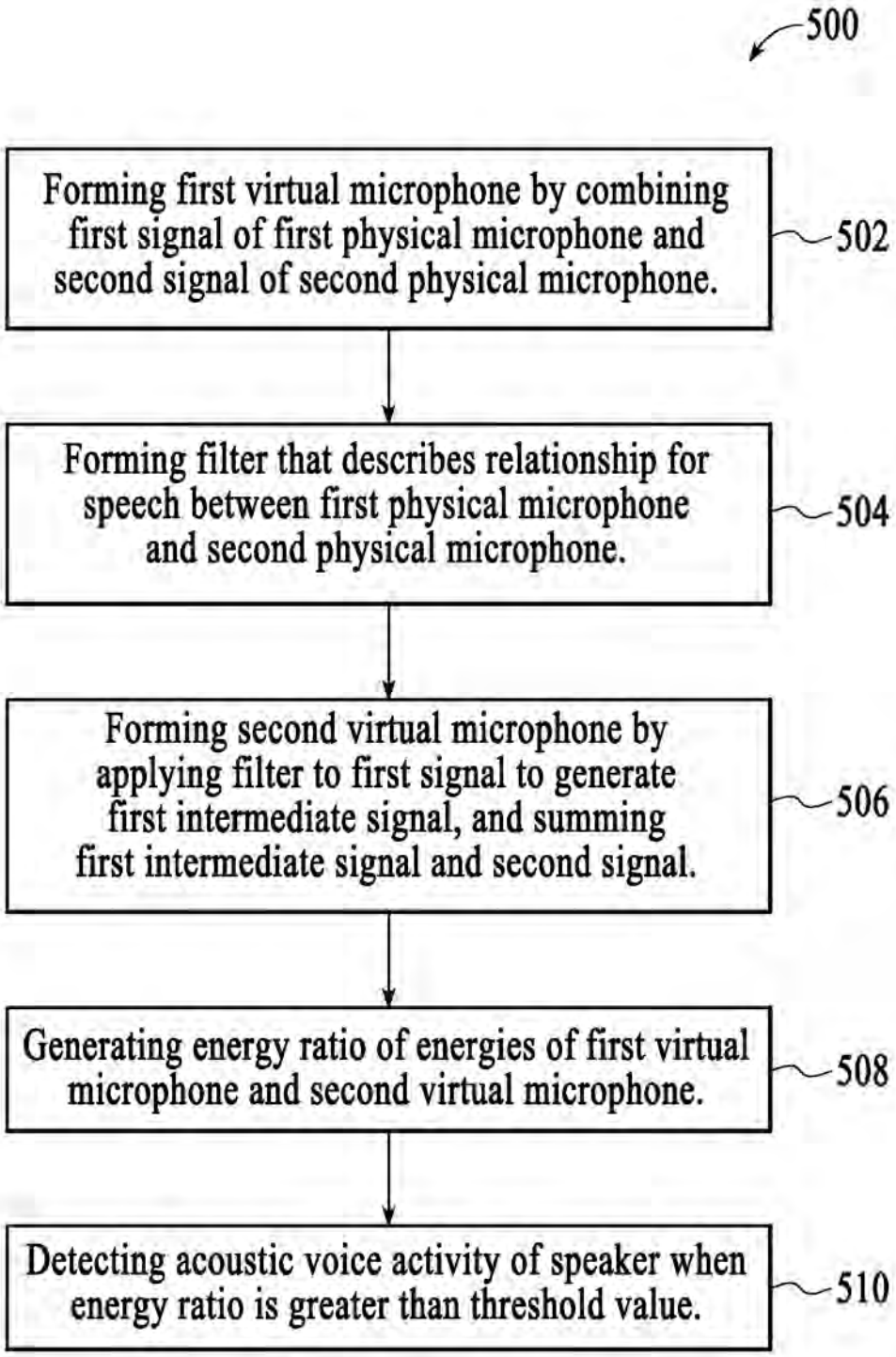
500
Forming first virtual microphone by combining first signal of first physical microphone and second signal of second physical microphone.
502
Forming filter that describes relationship for speech between first physical microphone and second physical microphone.
504
Forming second virtual microphone by applying filter to first signal to generate first intermediate signal, and summing first intermediate signal and second signal.
506
Generating energy ratio of energies of first virtual microphone and second virtual microphone.
508
Detecting acoustic voice activity of speaker when energy ratio is greater than threshold value.
510

FIG.5

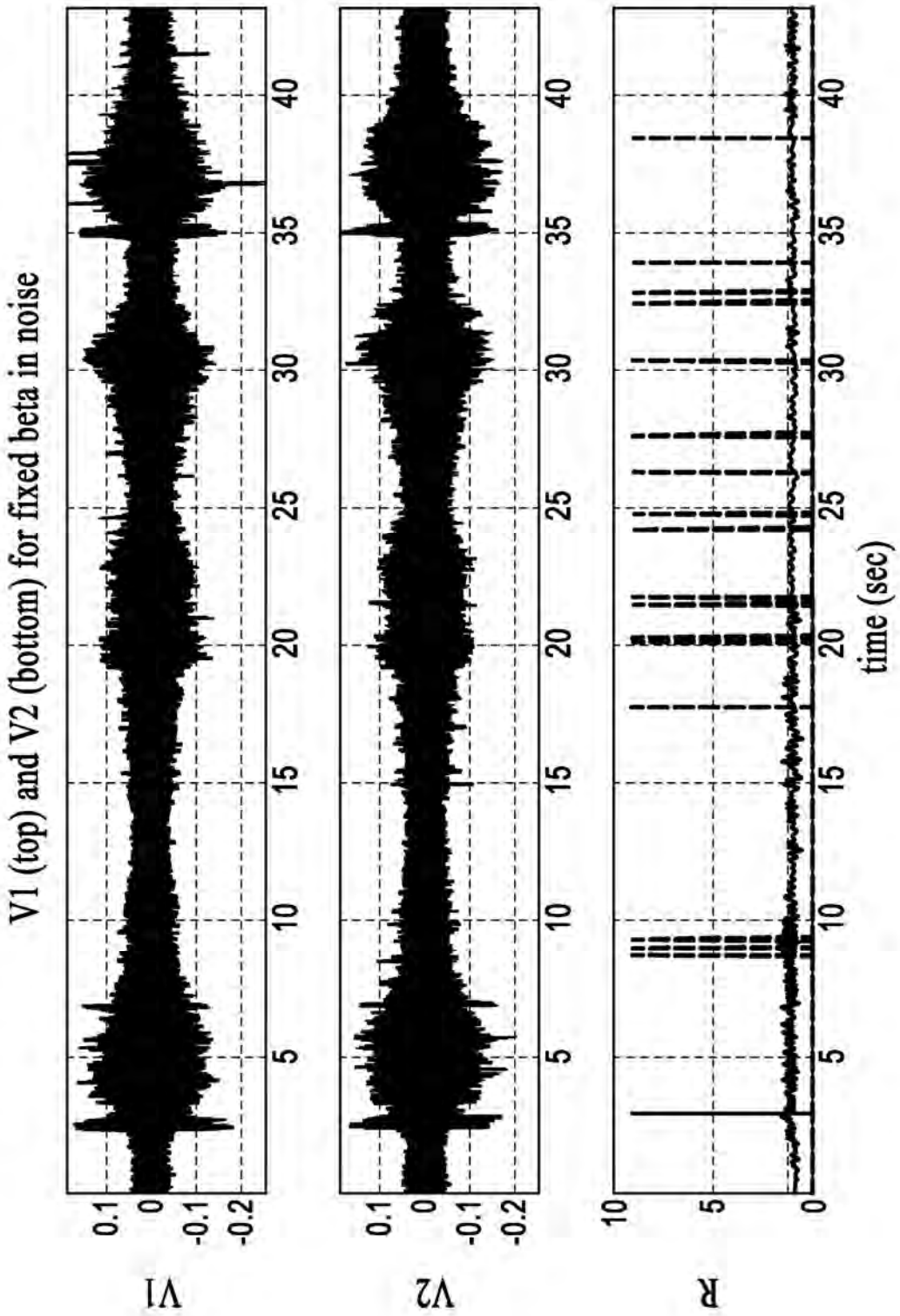
V1 (top) and V2 (bottom) for fixed beta in noise
V1
V2
R
0.1
0
-0.1
-0.2
10
5
0
5
10
15
20
25
30
35
40
time (sec)

FIG.6

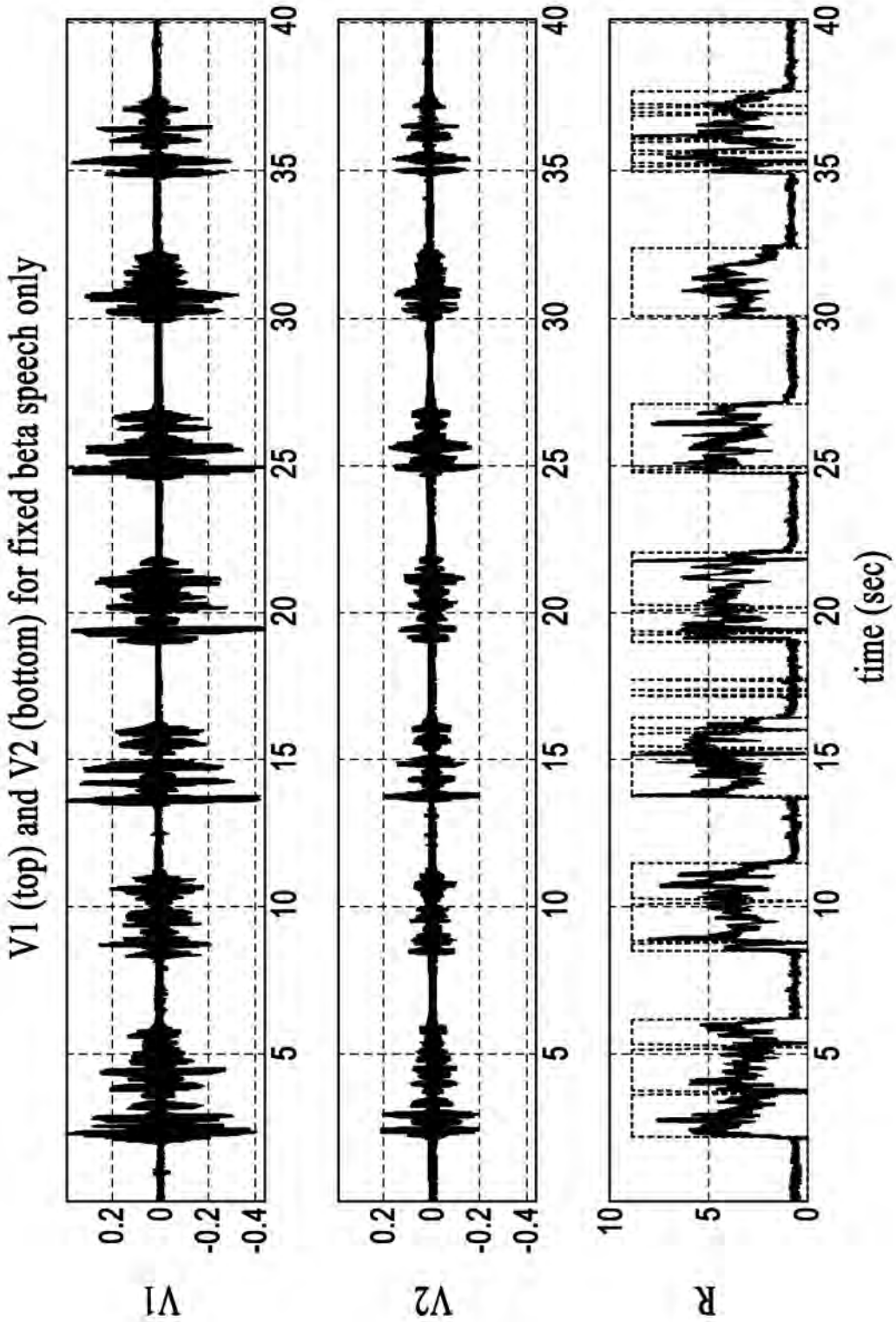
V1 (top) and V2 (bottom) for fixed beta speech only
V1
V2
R
time (sec)
0.2
0
-0.2
-0.4
10
5
0
5
10
15
20
25
30
35
40

FIG.7

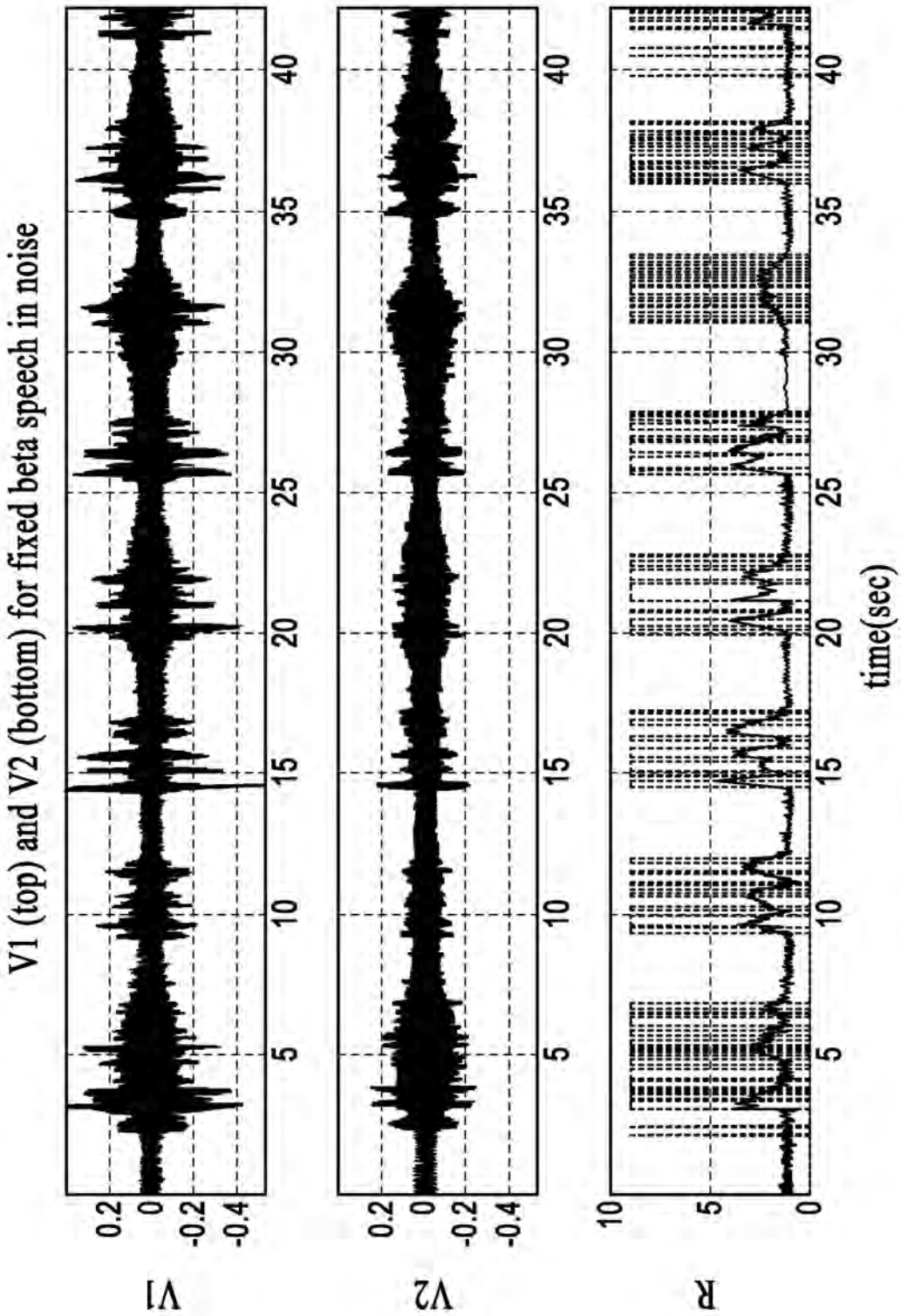
V1 (top) and V2 (bottom) for fixed beta speech in noise
V1
V2
R
0.2
0
-0.2
-0.4
10
5
0
5
10
15
20
25
30
35
40
time(sec)

FIG.8

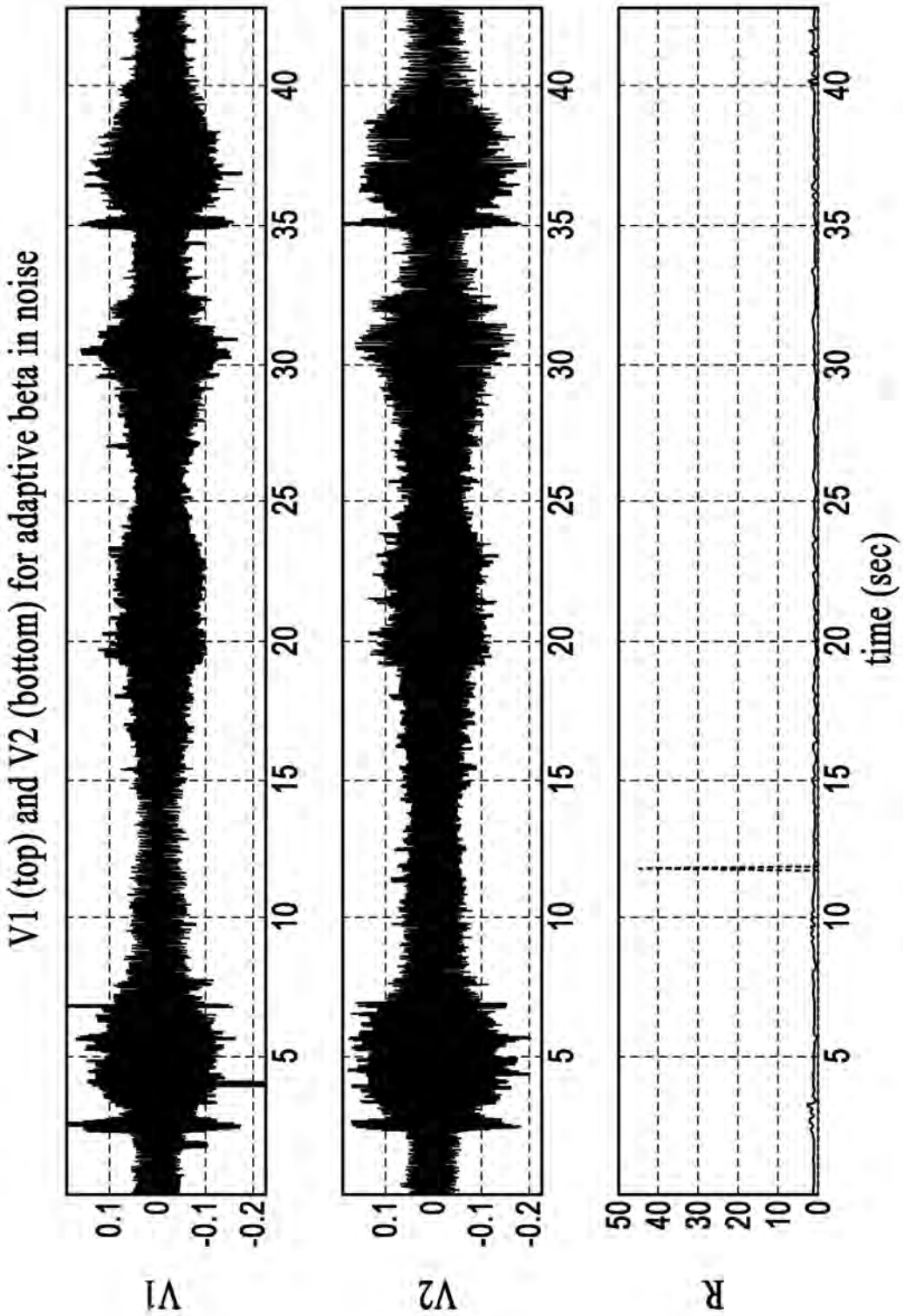
V1 (top) and V2 (bottom) for adaptive beta in noise
V1
V2
R
0.1
0
-0.1
-0.2
50
40
30
20
10
0
5
10
15
20
25
30
35
40
time (sec)

FIG.9

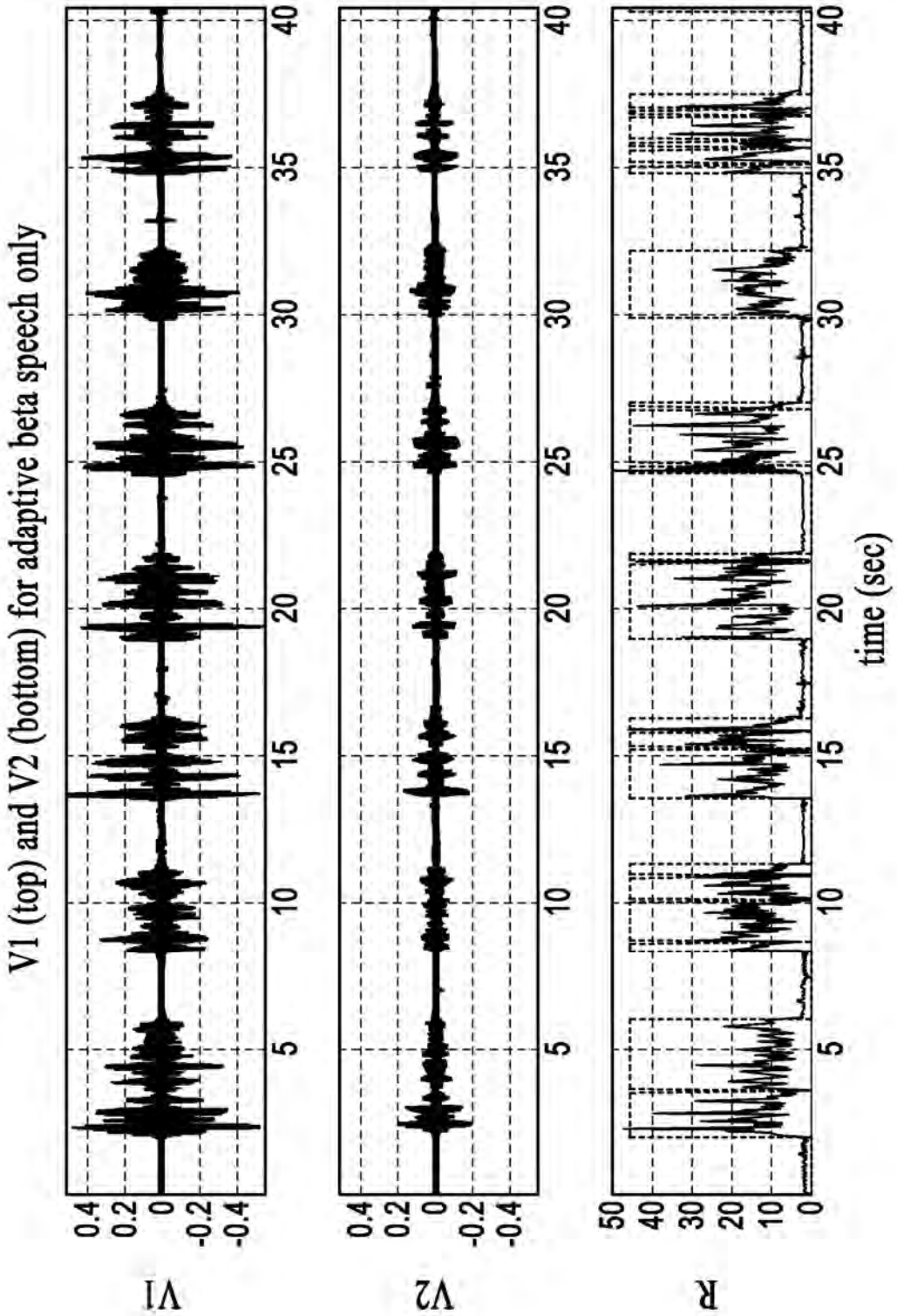
V1 (top) and V2 (bottom) for adaptive beta speech only
V1
V2
R
time (sec)
0.4
0.2
0
-0.2
-0.4
50
40
30
20
10
0
5
10
15
20
25
30
35
40

FIG.10

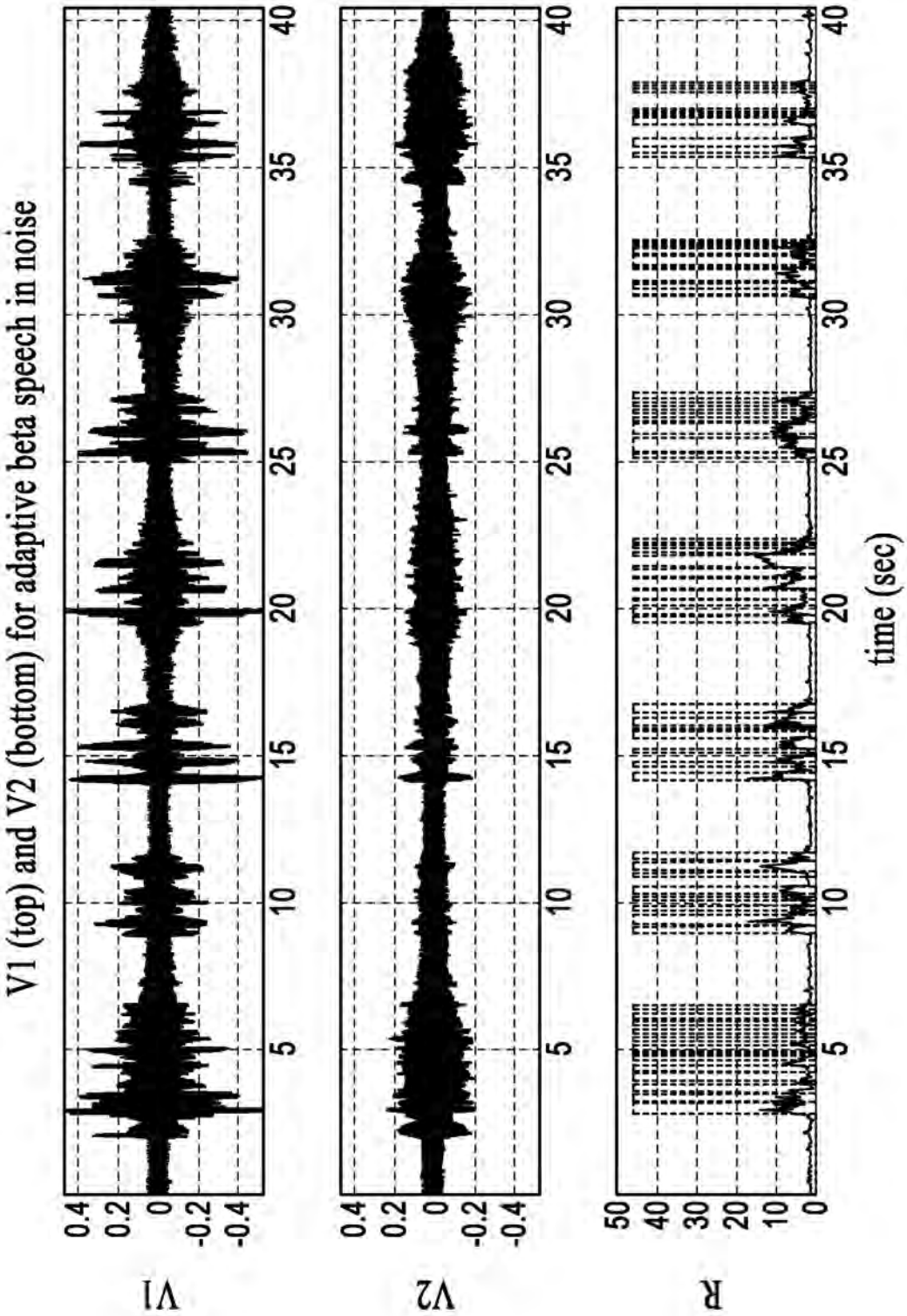
V1 (top) and V2 (bottom) for adaptive beta speech in noise
V1
V2
R
time (sec)

FIG.11

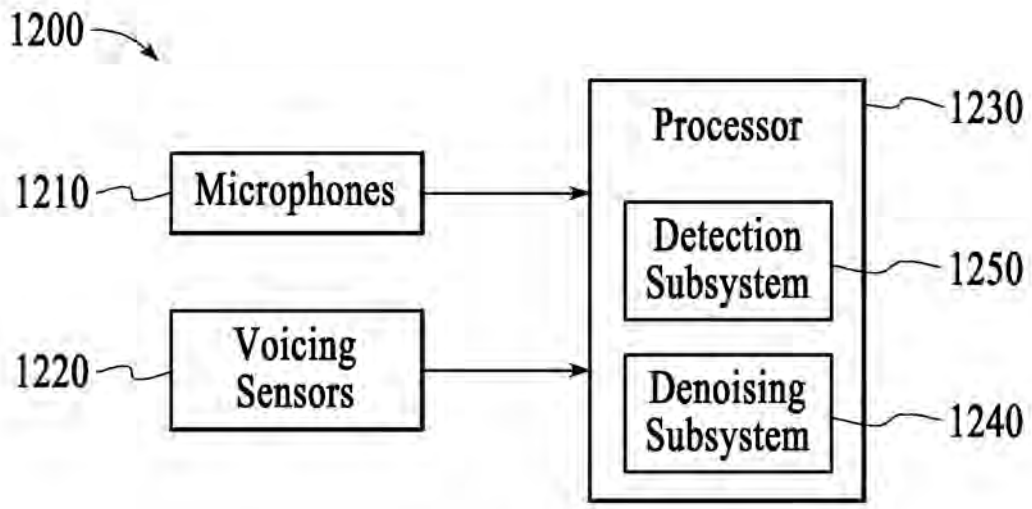
1200
1210
Microphones
1220
Voicing Sensors
Processor
1230
Detection Subsystem
1250
Denoising Subsystem
1240

FIG.12

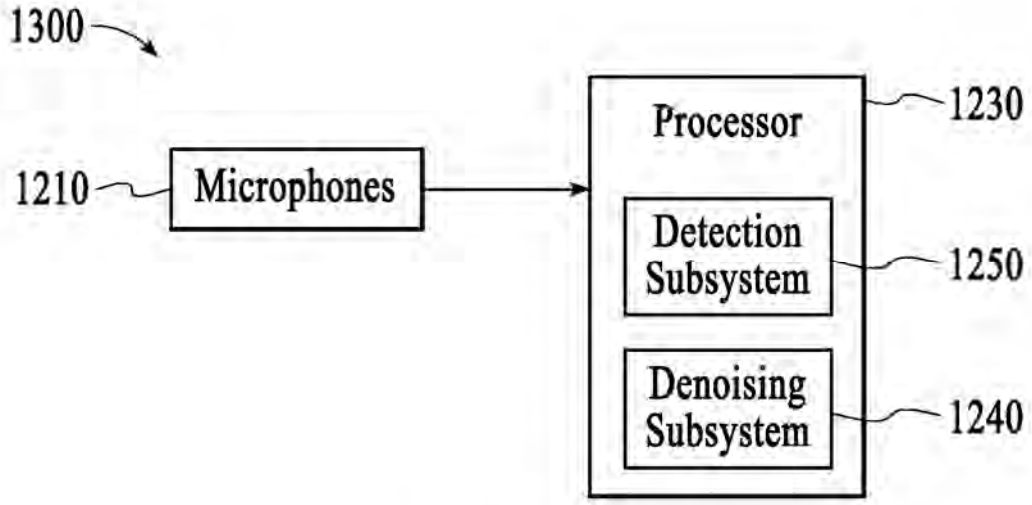
1300
1210
Microphones
Processor
1230
Detection Subsystem
1250
Denoising Subsystem
1240

FIG.13

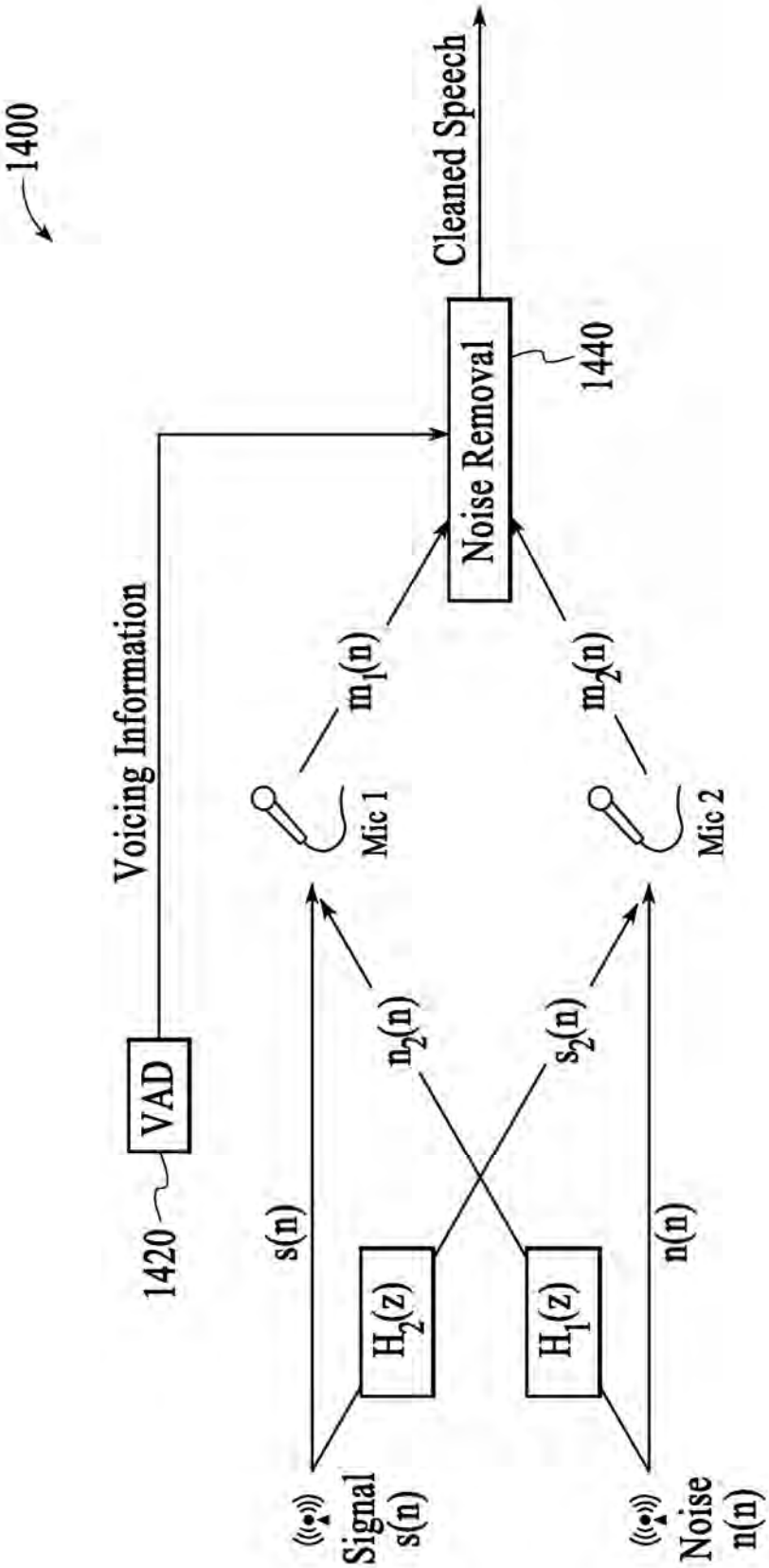
1400
Voicing Information
VAD
1420
Cleaned Speech
Noise Removal
1440
$m_1(n)$
$m_2(n)$
Mic 1
Mic 2
$n_2(n)$
$s_2(n)$
s(n)
n(n)
$H_2(z)$
$H_1(z)$
Signal
s(n)
Noise
n(n)

FIG.14

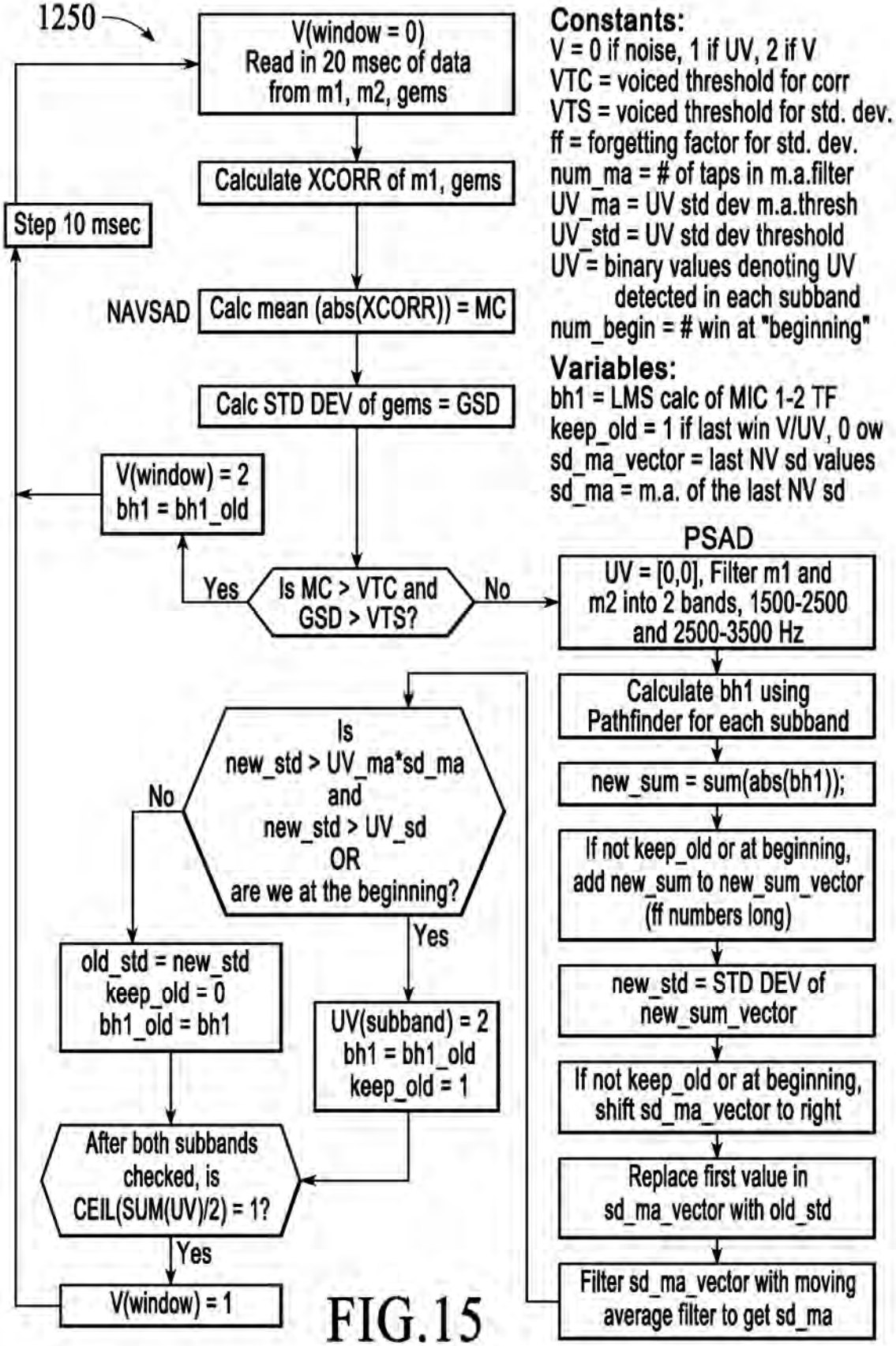
1250
V(window = 0)
Read in 20 msec of data
from m1, m2, gems
Calculate XCORR of m1, gems
Step 10 msec
NAVSAD
Calc mean (abs(XCORR)) = MC
Calc STD DEV of gems = GSD
V(window) = 2
bh1 = bh1_old
Yes
Is MC > VTC and
GSD > VTS?
No
Constants:
V = 0 if noise, 1 if UV, 2 if V
VTC = voiced threshold for corr
VTS = voiced threshold for std. dev.
ff = forgetting factor for std. dev.
num_ma = # of taps in m.a.filter
UV_ma = UV std dev m.a.thresh
UV_std = UV std dev threshold
UV = binary values denoting UV
detected in each subband
num_begin = # win at "beginning"
Variables:
bh1 = LMS calc of MIC 1-2 TF
keep_old = 1 if last win V/UV, 0 ow
sd_ma_vector = last NV sd values
sd_ma = m.a. of the last NV sd
PSAD
UV = [0,0], Filter m1 and
m2 into 2 bands, 1500-2500
and 2500-3500 Hz
Calculate bh1 using
Pathfinder for each subband
new_sum = sum(abs(bh1));
If not keep_old or at beginning,
add new_sum to new_sum_vector
(ff numbers long)
new_std = STD DEV of
new_sum_vector
If not keep_old or at beginning,
shift sd_ma_vector to right
Replace first value in
sd_ma_vector with old_std
Filter sd_ma_vector with moving
average filter to get sd_ma
Is
new_std > UV_ma*sd_ma
and
new_std > UV_sd
OR
are we at the beginning?
No
Yes
old_std = new_std
keep_old = 0
bh1_old = bh1
UV(subband) = 2
bh1 = bh1_old
keep_old = 1
After both subbands
checked, is
CEIL(SUM(UV)/2) = 1?
Yes
V(window) = 1

FIG.15

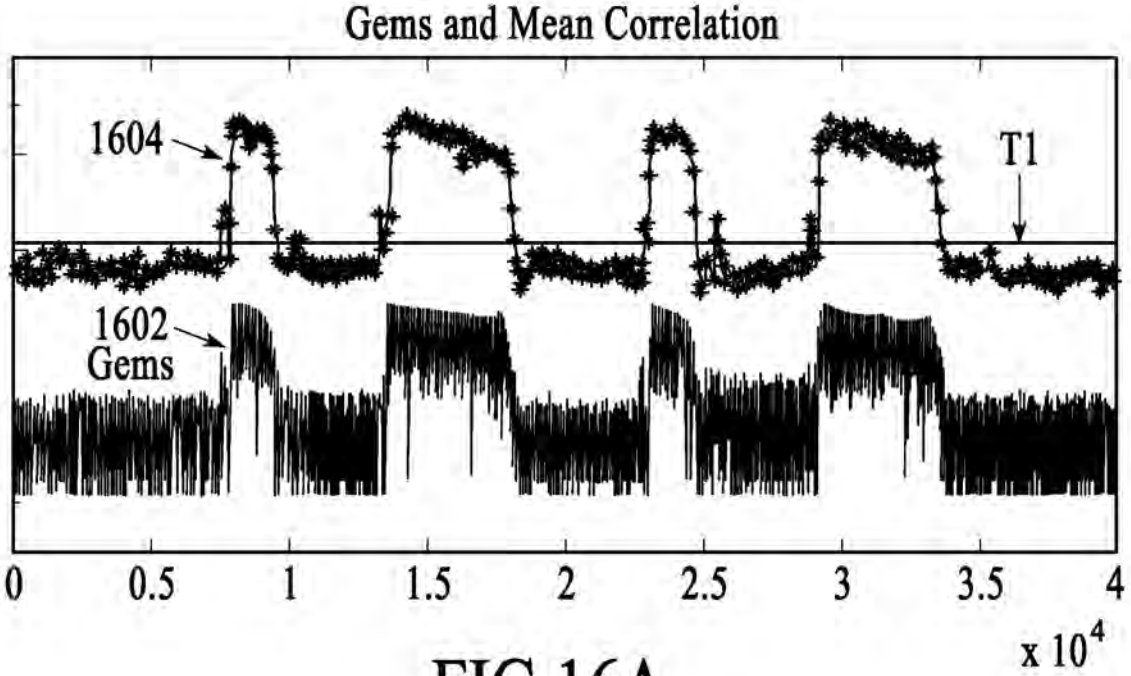

FIG.16A

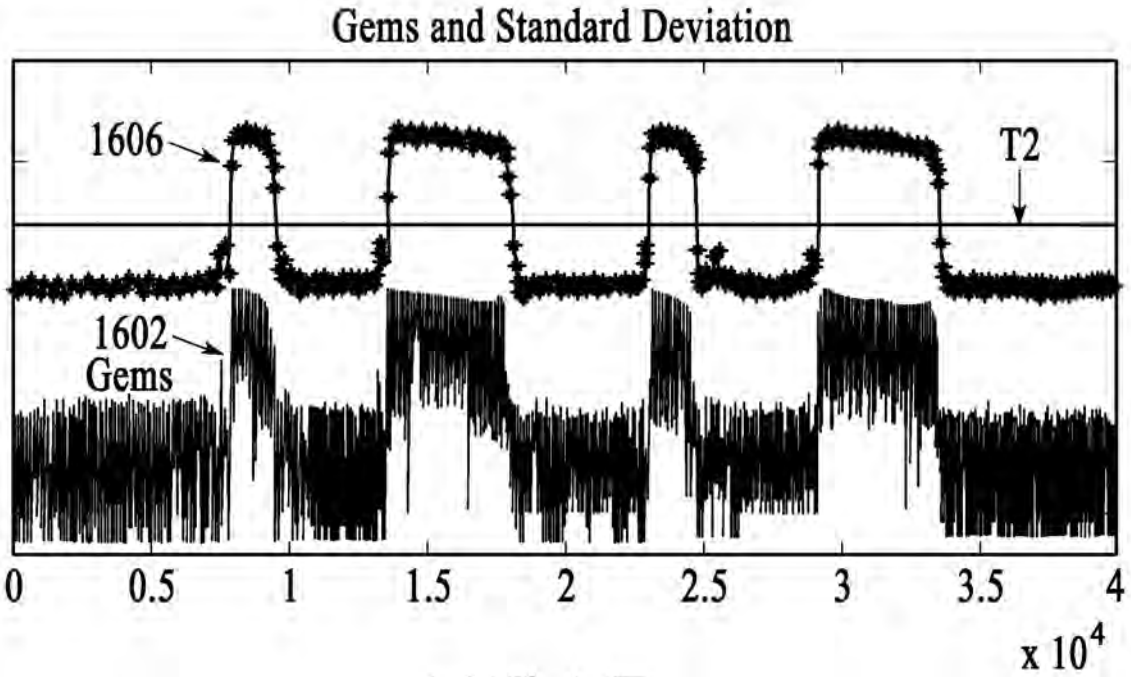

FIG.16B

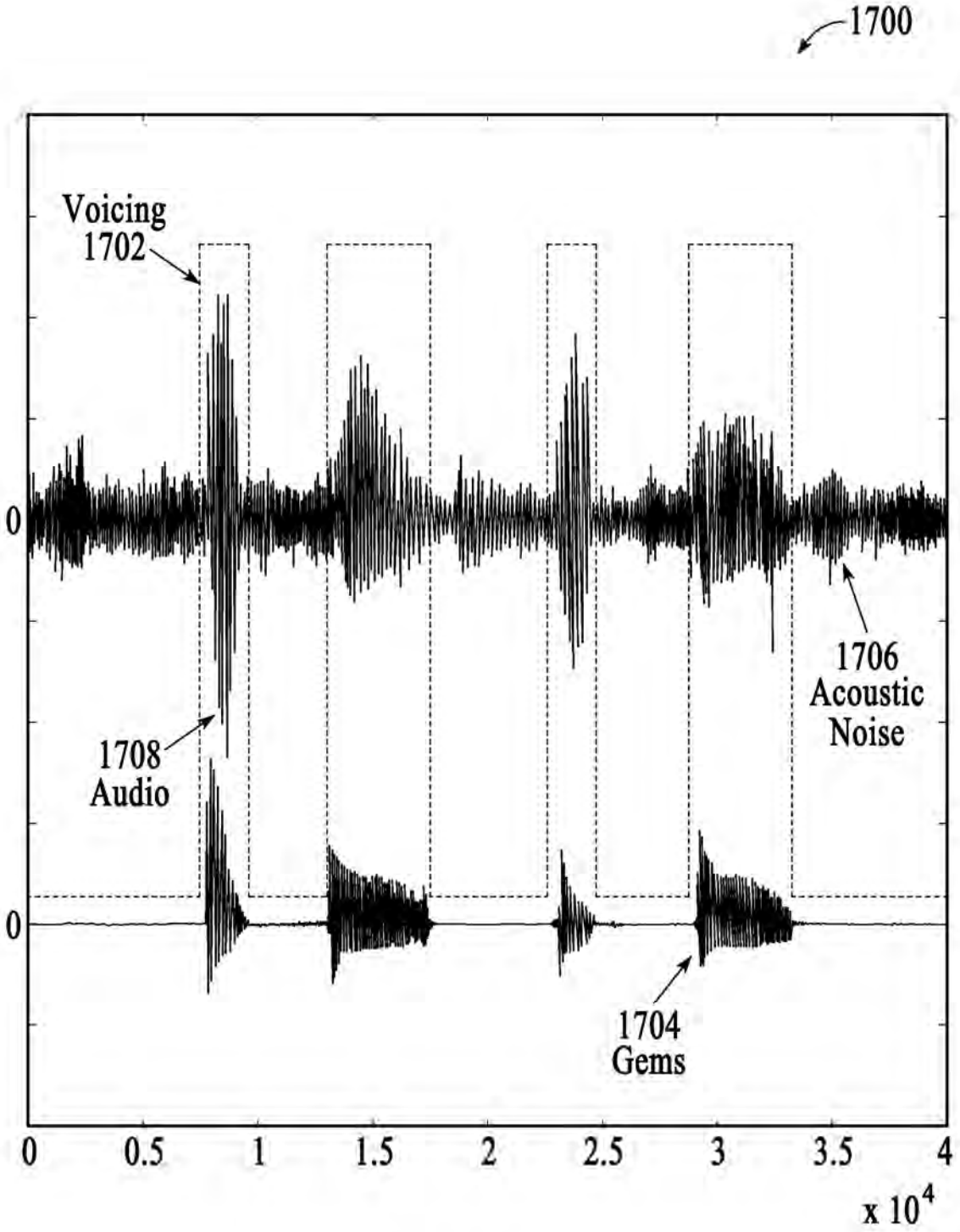
1700
Voicing
1702
0
1706
Acoustic
Noise
1708
Audio
0
1704
Gems
0
0.5
1
1.5
2
2.5
3
3.5
4
x 10^4

FIG.17

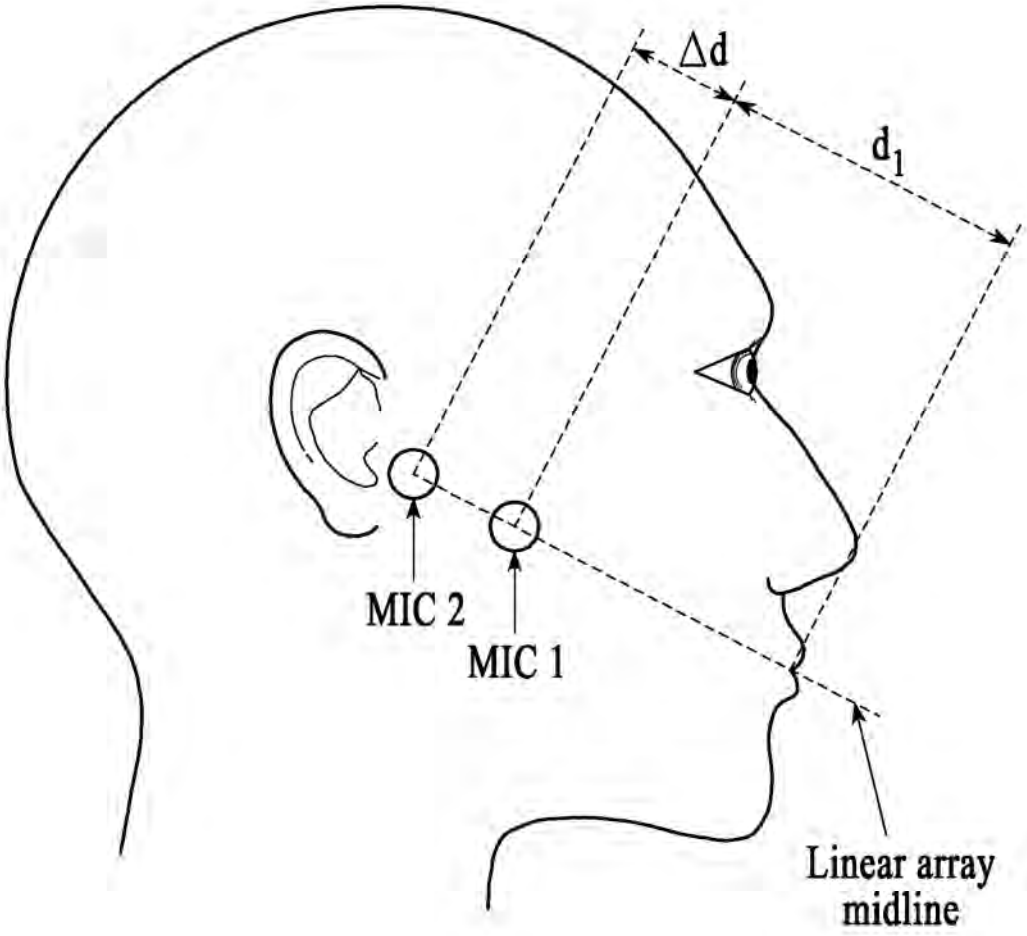

FIG.18

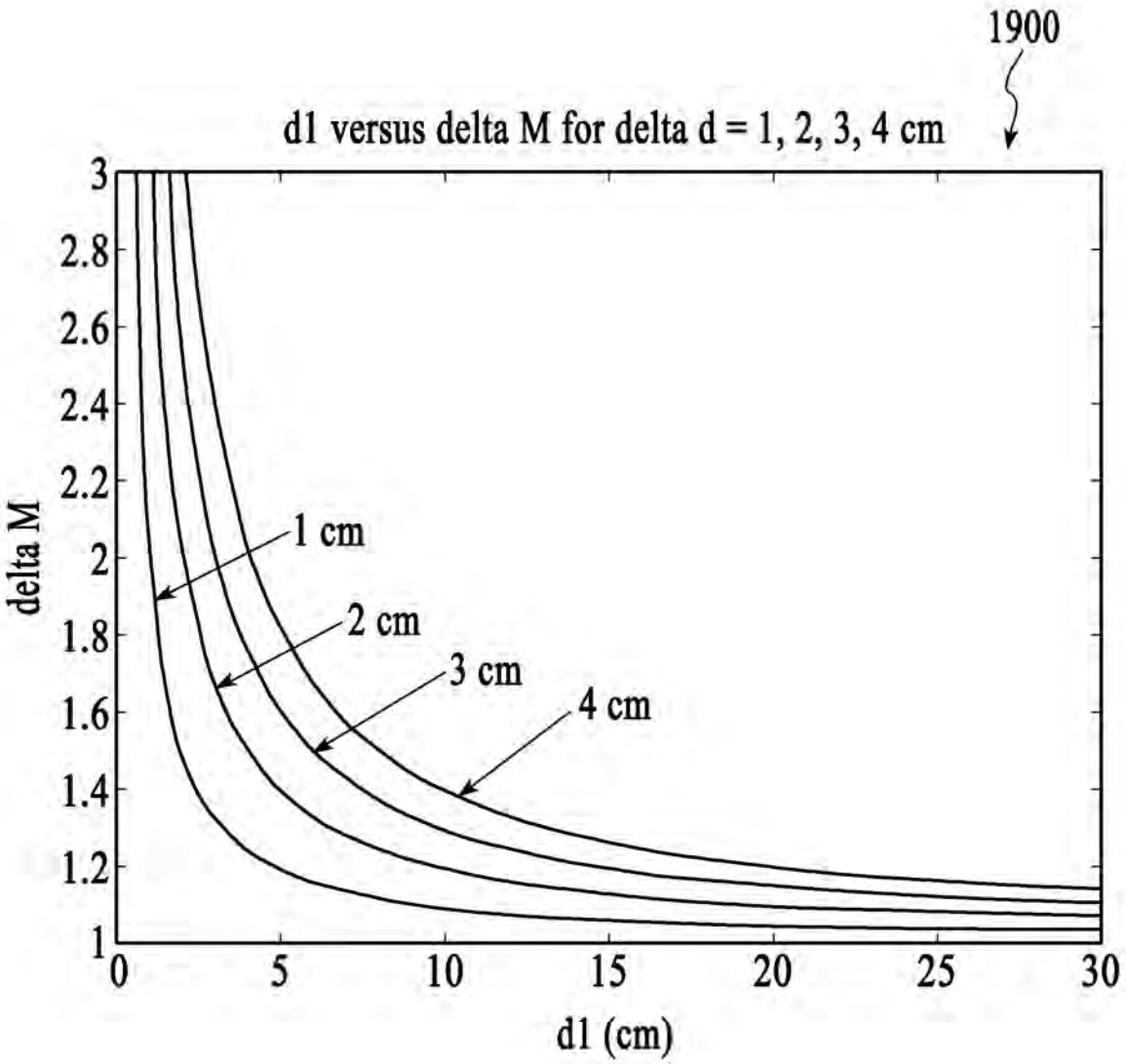
1900
d1 versus delta M for delta d = 1, 2, 3, 4 cm
delta M
d1 (cm)
1 cm
2 cm
3 cm
4 cm
3
2.8
2.6
2.4
2.2
2
1.8
1.6
1.4
1.2
1
0
5
10
15
20
25
30

FIG.19

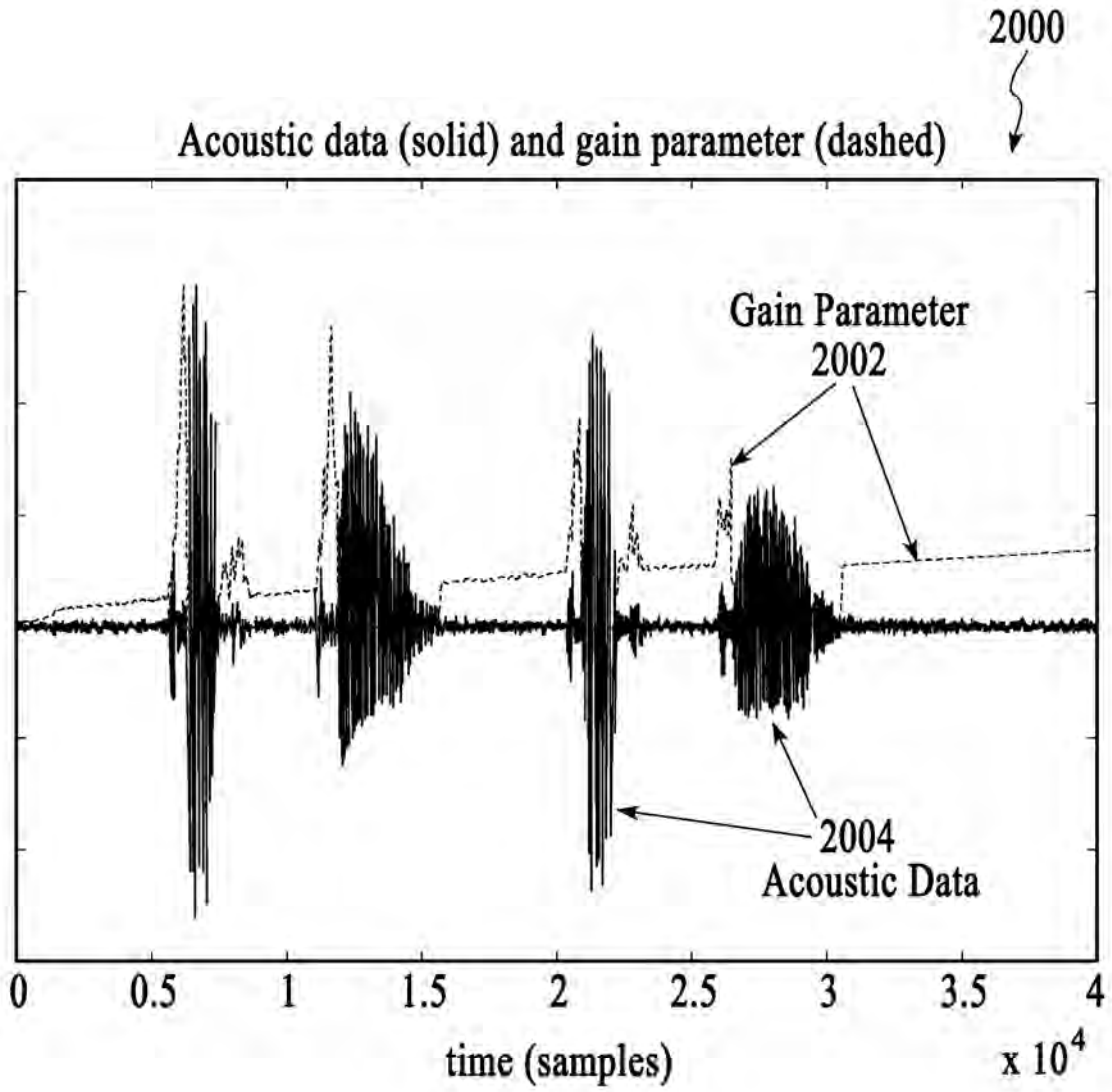
2000
Acoustic data (solid) and gain parameter (dashed)
Gain Parameter
2002
2004
Acoustic Data
0
0.5
1
1.5
2
2.5
3
3.5
4
time (samples)
x 10^4

FIG.20

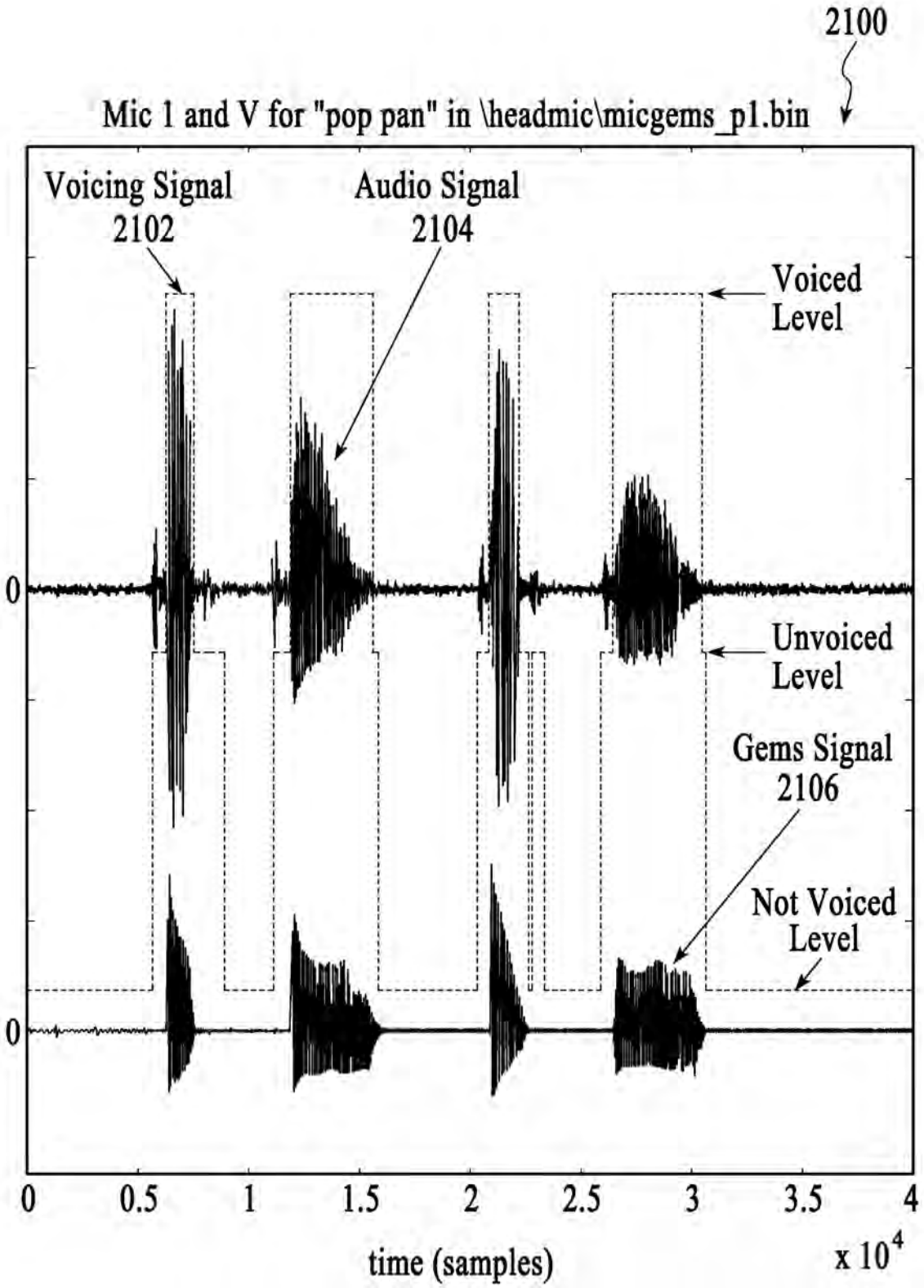
2100
Mic 1 and V for "pop pan" in \headmic\micgems_p1.bin
Voicing Signal
2102
Audio Signal
2104
Voiced
Level
Unvoiced
Level
Gems Signal
2106
Not Voiced
Level
0
0
0
0.5
1
1.5
2
2.5
3
3.5
4
time (samples)
x 10^4

FIG.21

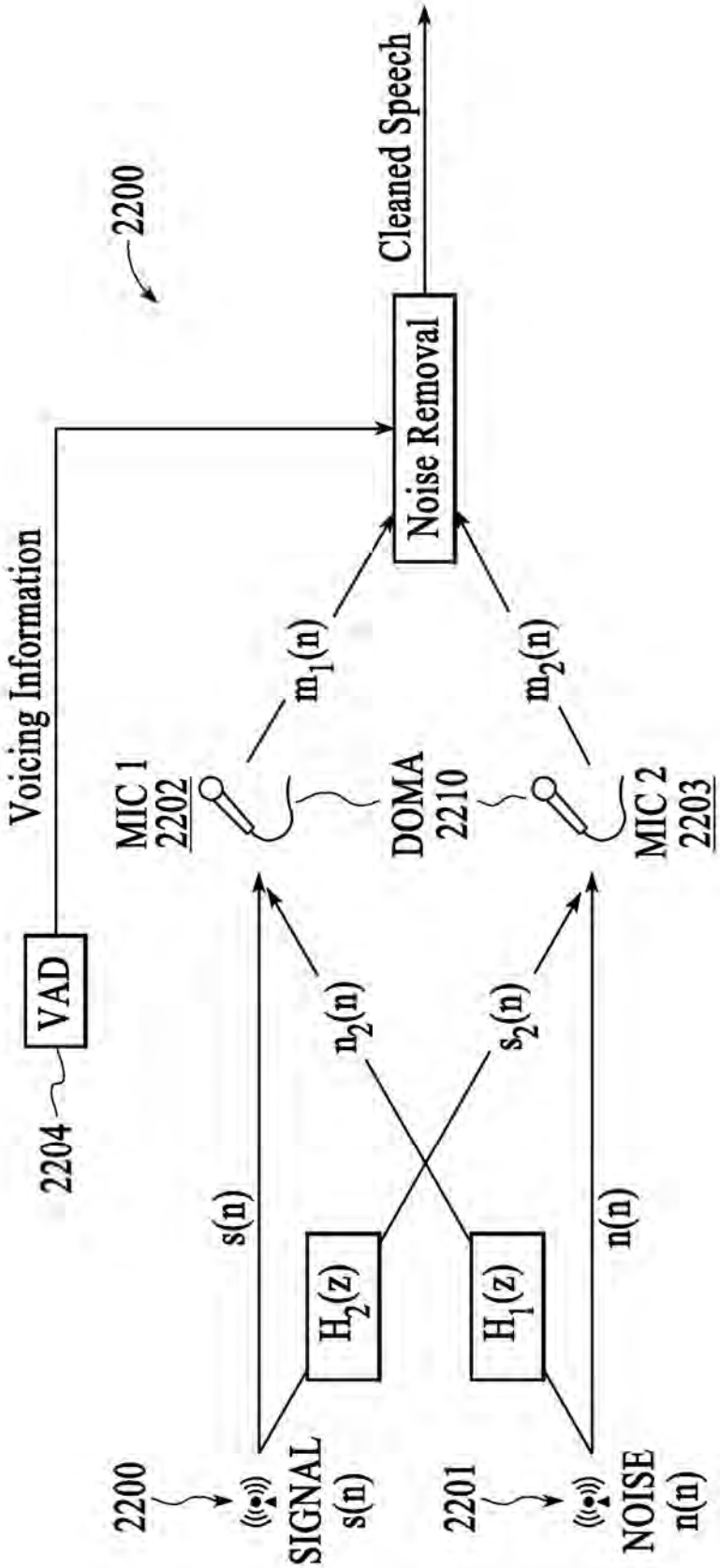
2200
Voicing Information
VAD
2204
2200
SIGNAL
s(n)
2201
NOISE
n(n)
s(n)
n(n)
$H_2(z)$
$H_1(z)$
$n_2(n)$
$s_2(n)$
MIC 1
2202
DOMA
2210
MIC 2
2203
$m_1(n)$
$m_2(n)$
Noise Removal
Cleaned Speech

FIG.22

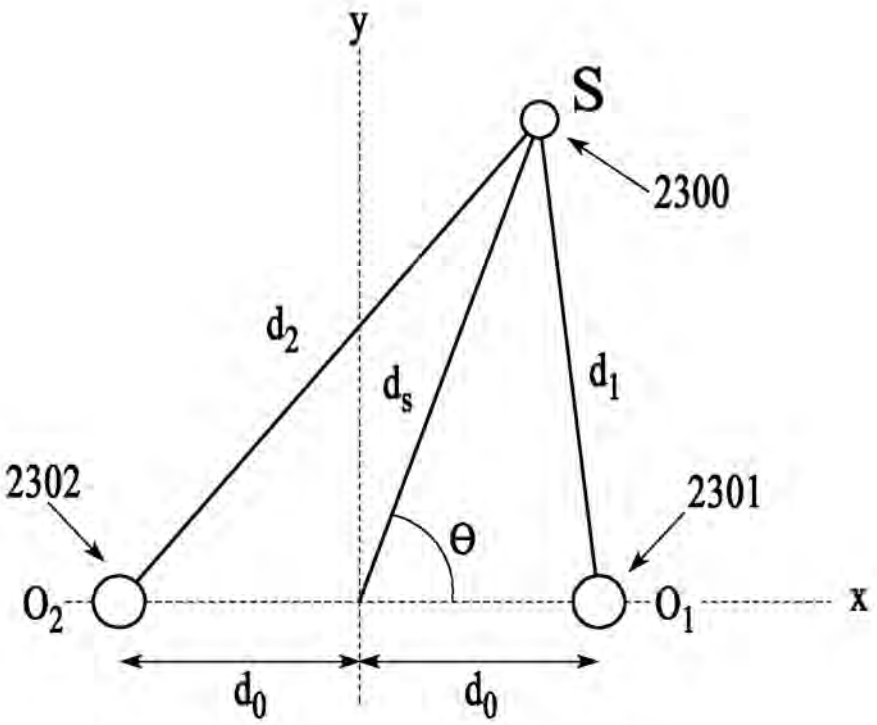
y
S
2300
d_2
d_s
d_1
2302
2301
θ
O_2
O_1
x
d_0
d_0

FIG.23

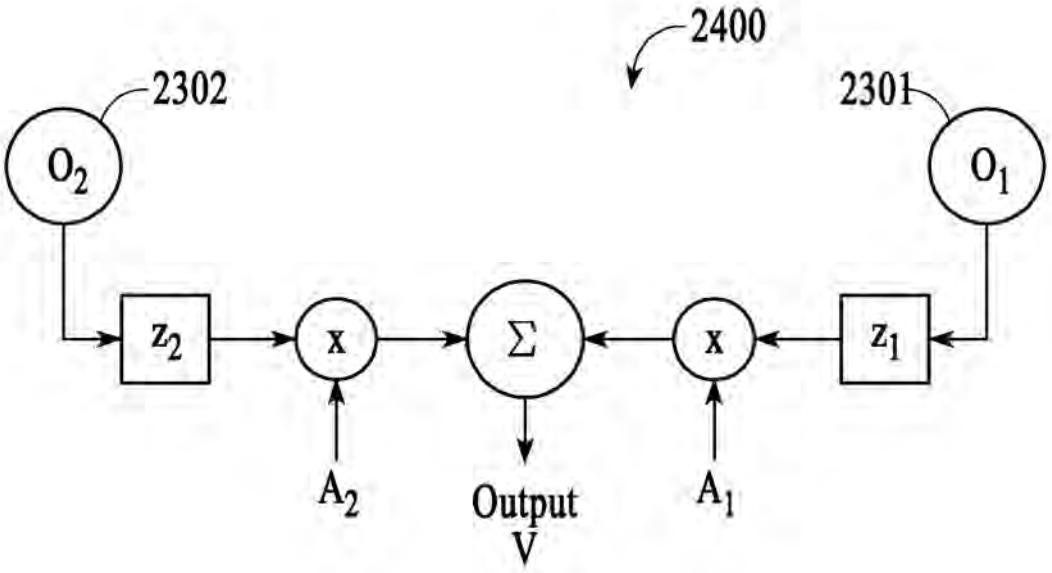
2400
2302
2301
O_2
O_1
z_2
x
Σ
x
z_1
A_2
Output
V
A_1

FIG.24

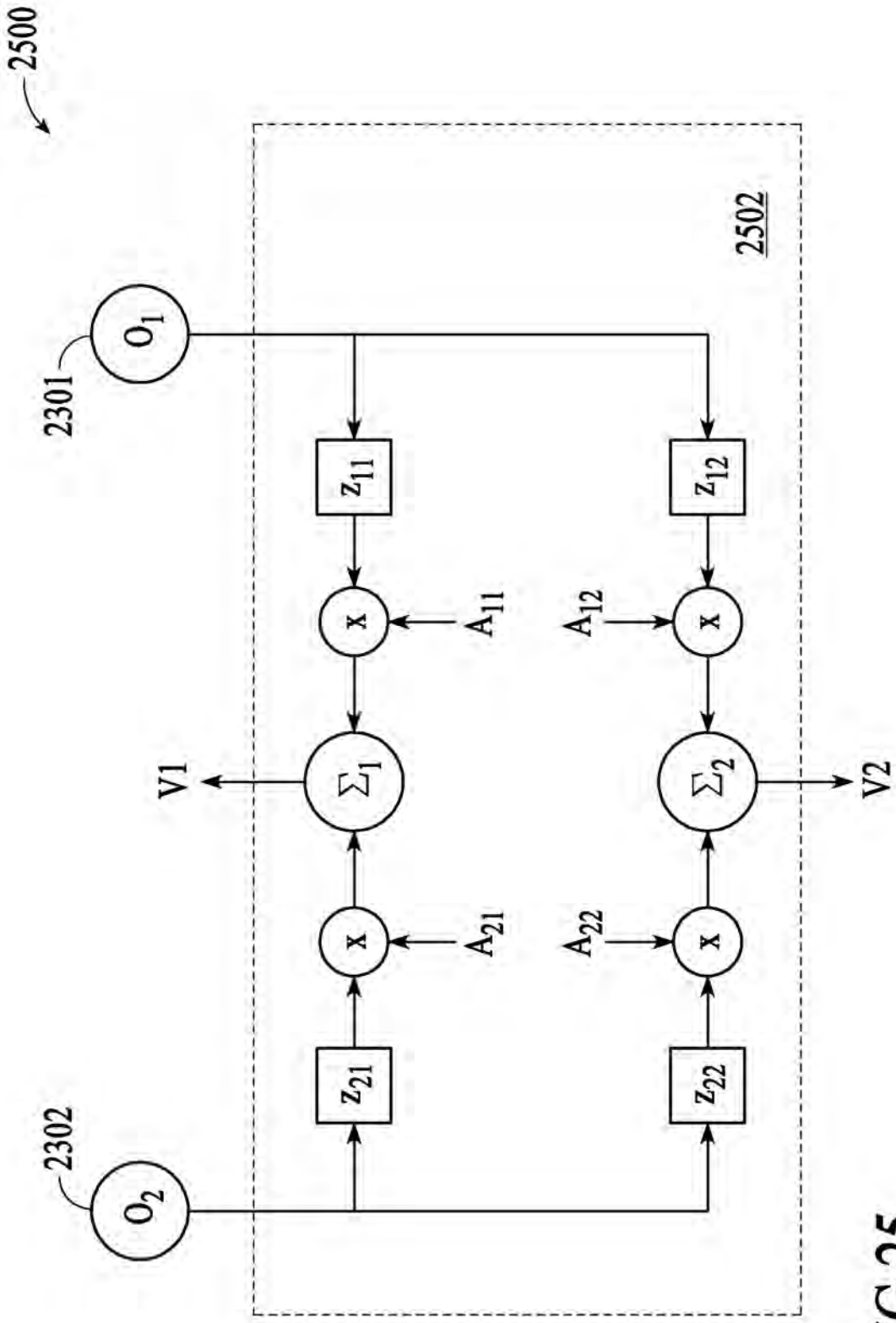
2500
2301
2302
O_1
O_2
z_{11}
z_{12}
z_{21}
z_{22}
x
A_{11}
A_{12}
A_{21}
A_{22}
Σ_1
Σ_2
V1
V2
2502

FIG.25

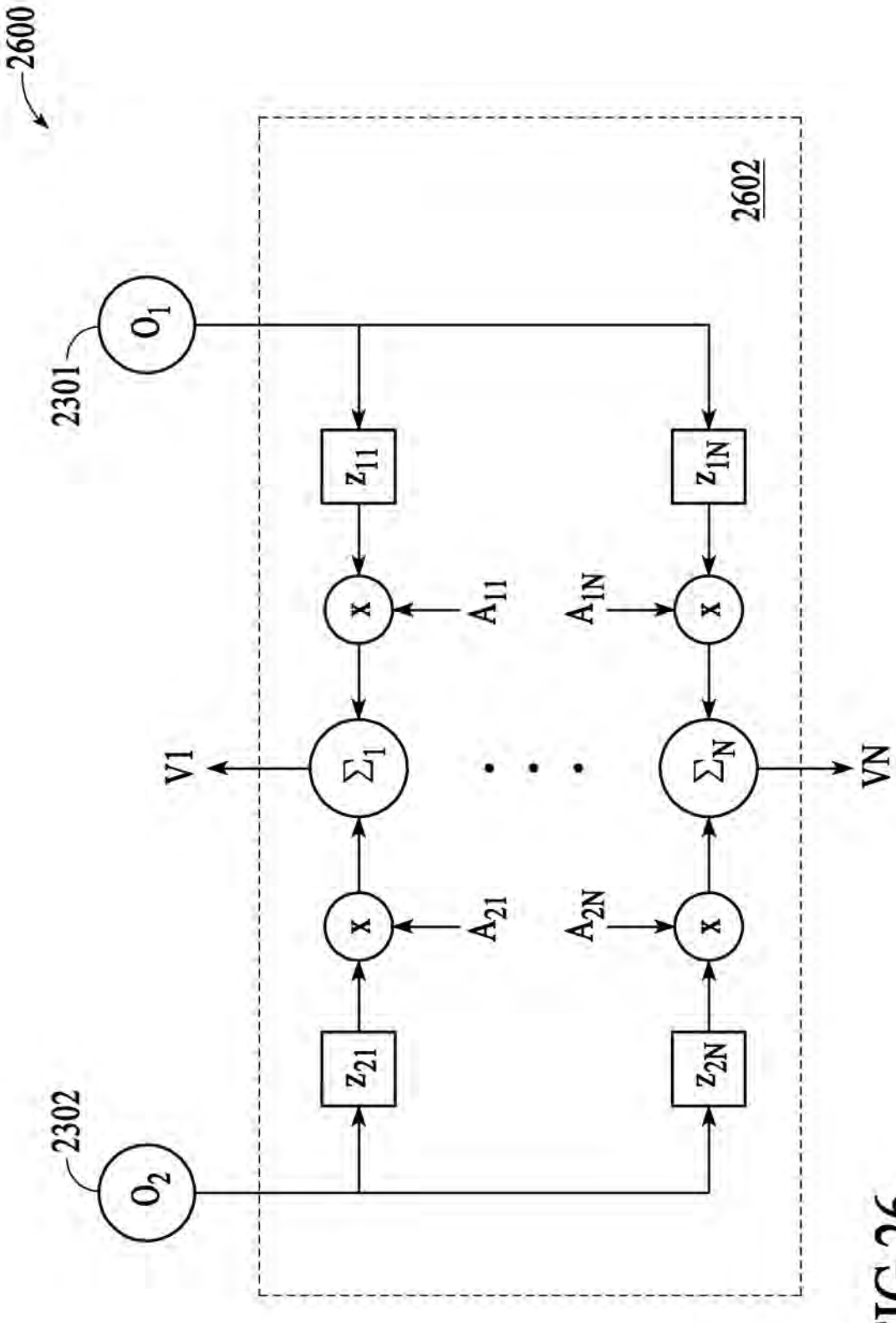
2600
2301
2302
O_1
O_2
z_{11}
z_{21}
z_{1N}
z_{2N}
x
A_{11}
A_{21}
A_{1N}
A_{2N}
Σ_1
Σ_N
V1
VN
2602

FIG.26

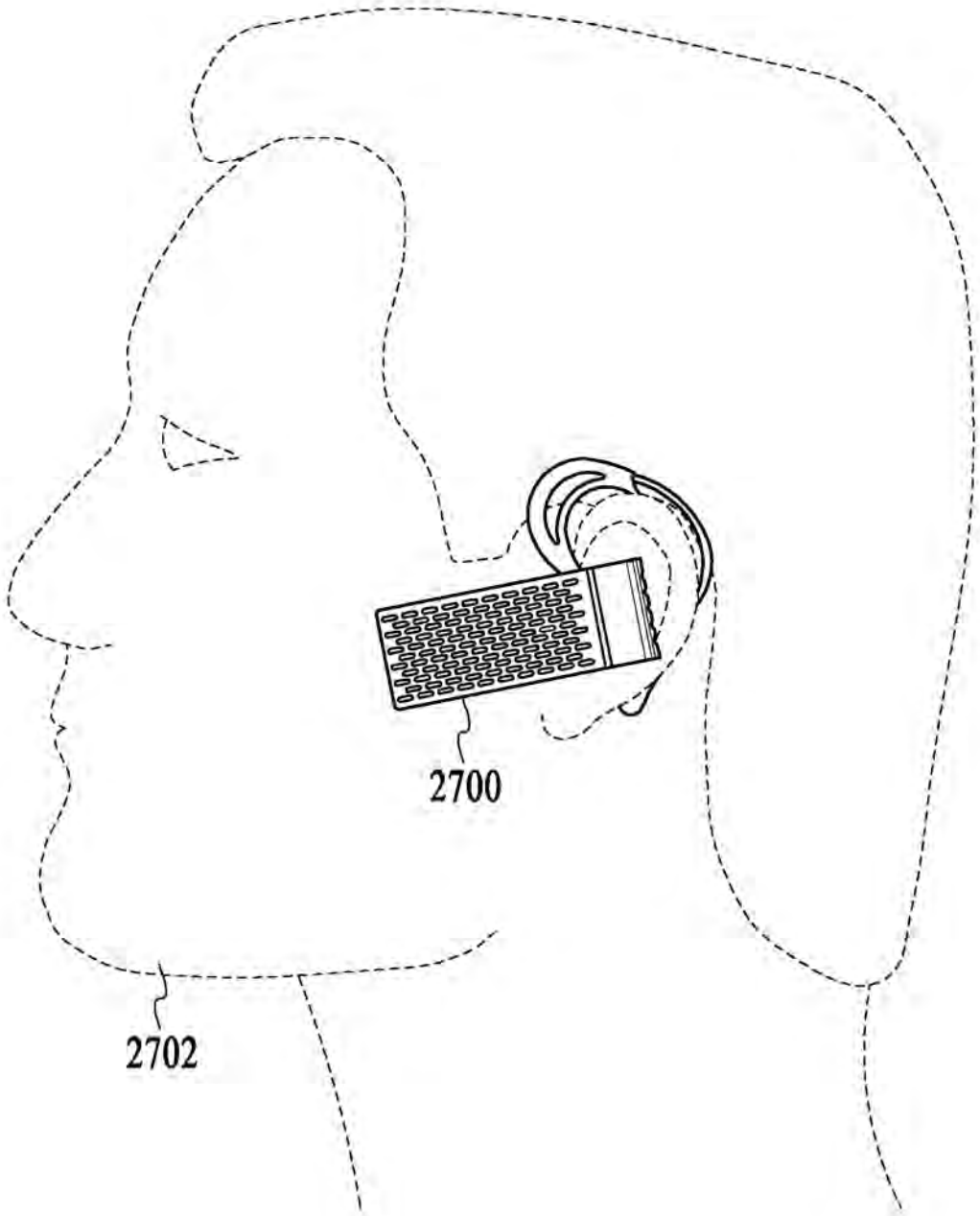

FIG.27

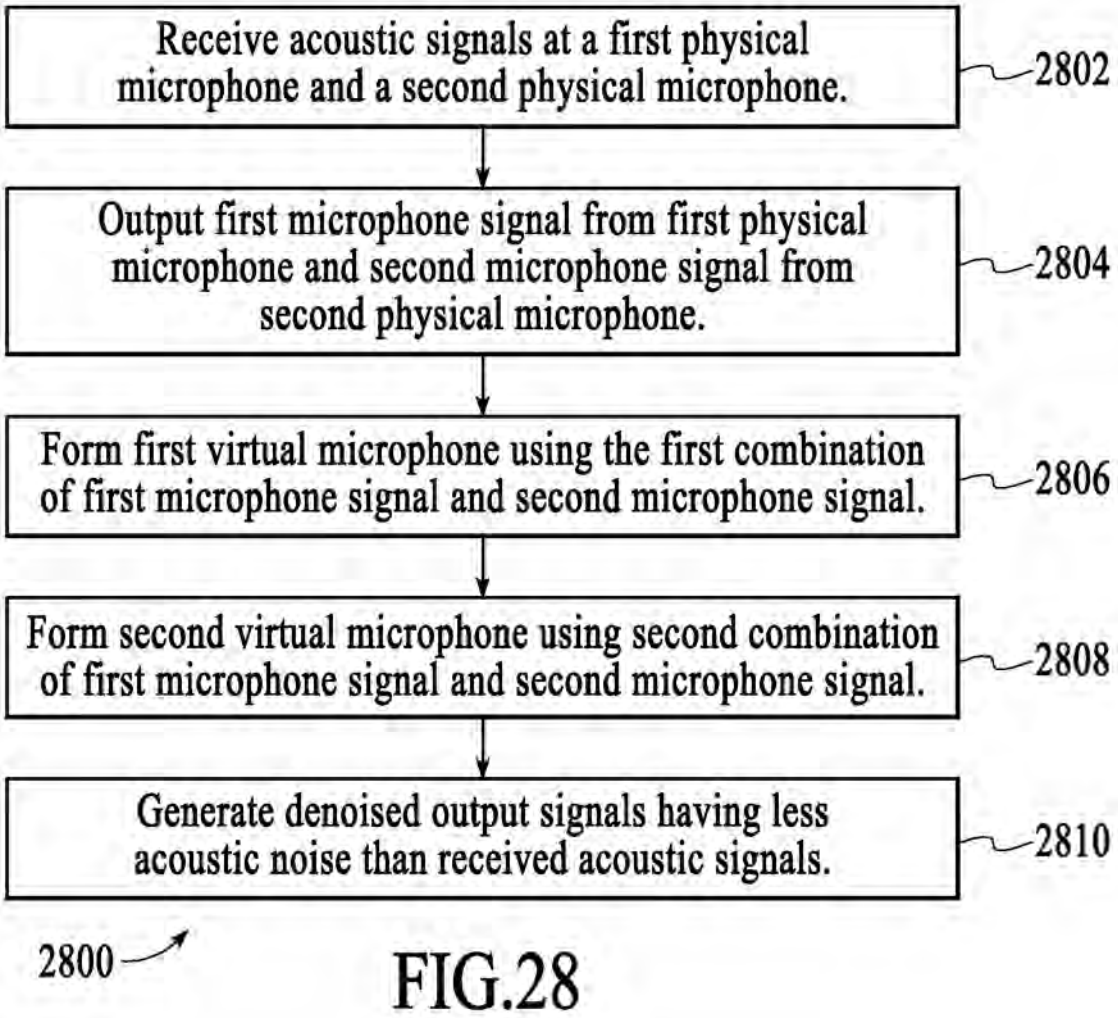
Receive acoustic signals at a first physical microphone and a second physical microphone.
2802
Output first microphone signal from first physical microphone and second microphone signal from second physical microphone.
2804
Form first virtual microphone using the first combination of first microphone signal and second microphone signal.
2806
Form second virtual microphone using second combination of first microphone signal and second microphone signal.
2808
Generate denoised output signals having less acoustic noise than received acoustic signals.
2810
2800

FIG.28

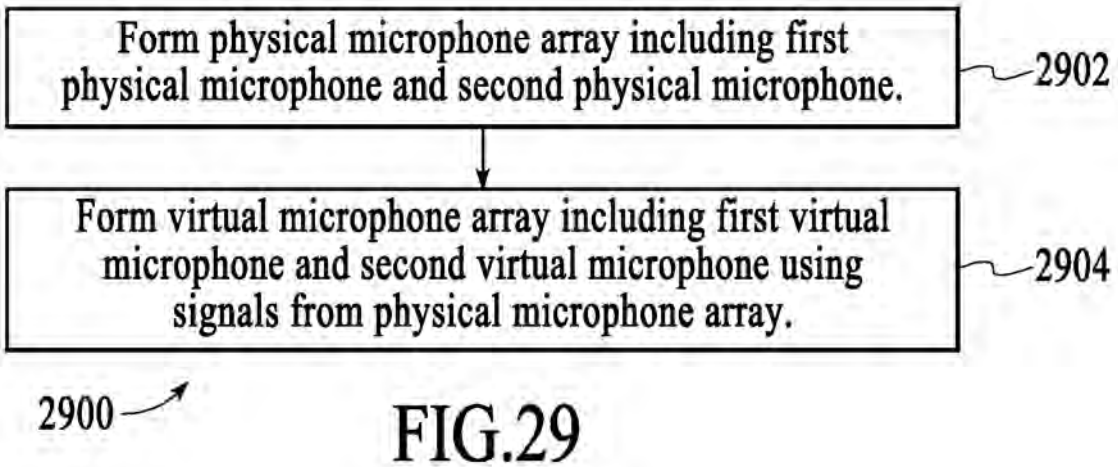
Form physical microphone array including first physical microphone and second physical microphone.
2902
Form virtual microphone array including first virtual microphone and second virtual microphone using signals from physical microphone array.
2904
2900

FIG.29

Linear response of V2 to a speech source at 0.10 meters

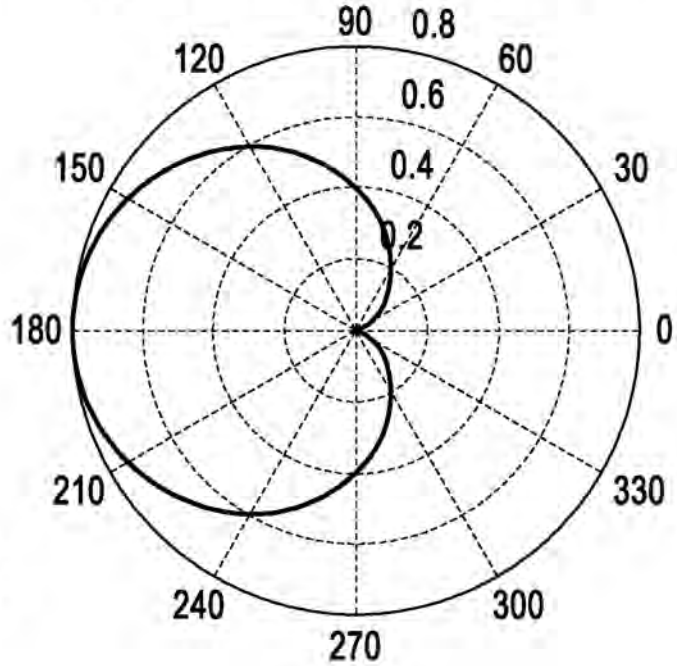

FIG.30

Linear response of V2 to a noise source at 1 meters

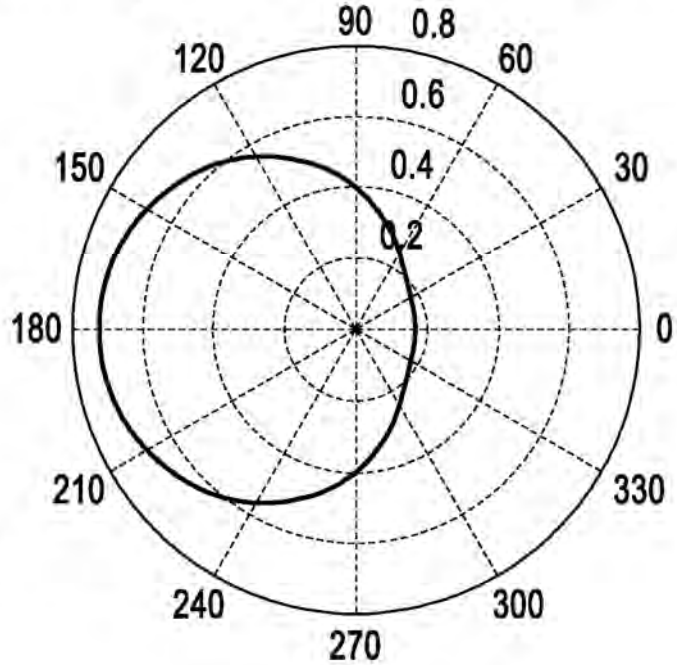

FIG.31

Linear response of V1 to a speech source at 0.10 meters

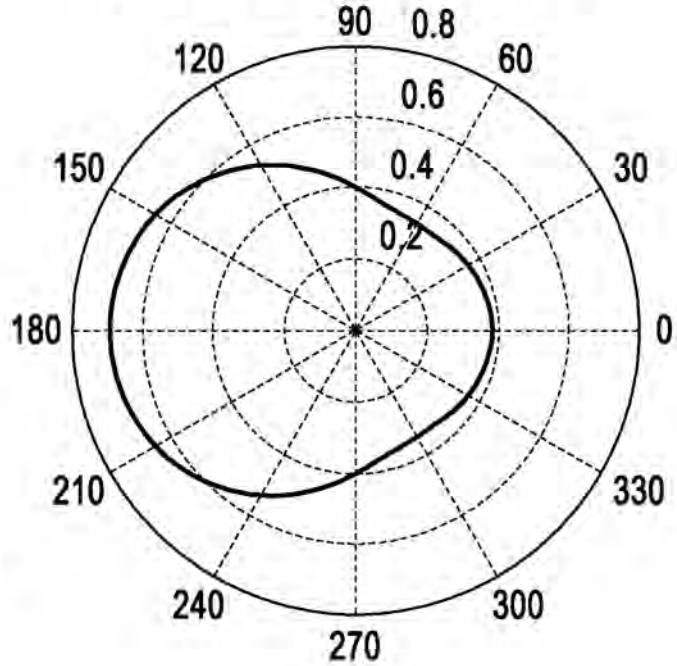

FIG.32

Linear response of V1 to a noise source at 1 meters

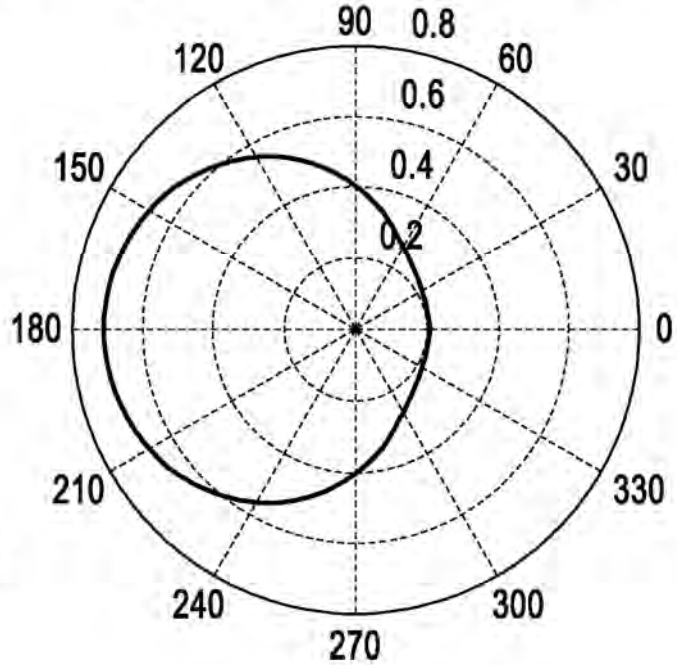

FIG.33

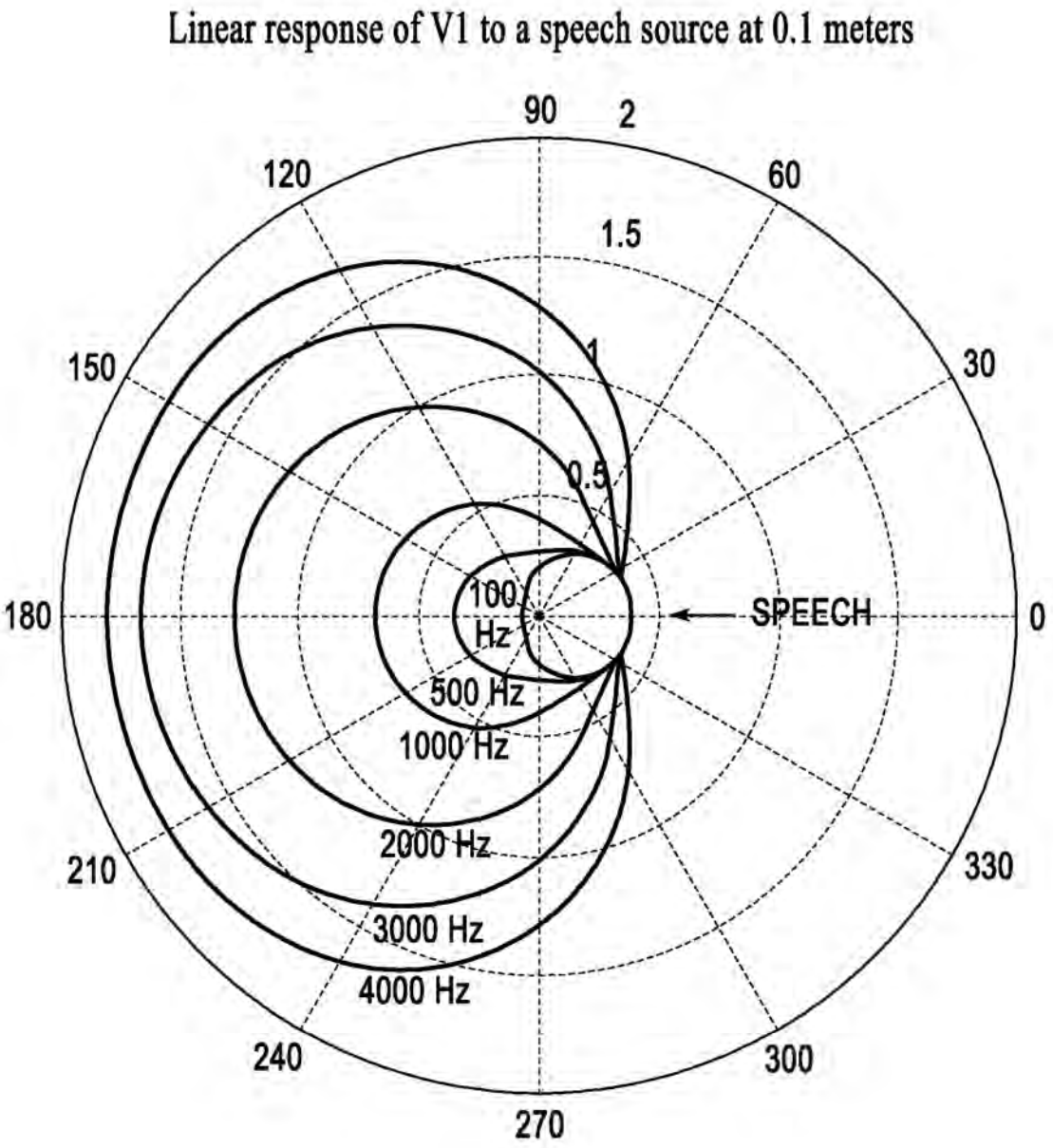
Linear response of V1 to a speech source at 0.1 meters
90
2
120
60
1.5
150
30
1
0.5
180
0
SPEECH
100 Hz
500 Hz
1000 Hz
2000 Hz
3000 Hz
4000 Hz
210
330
240
300
270

FIG.34

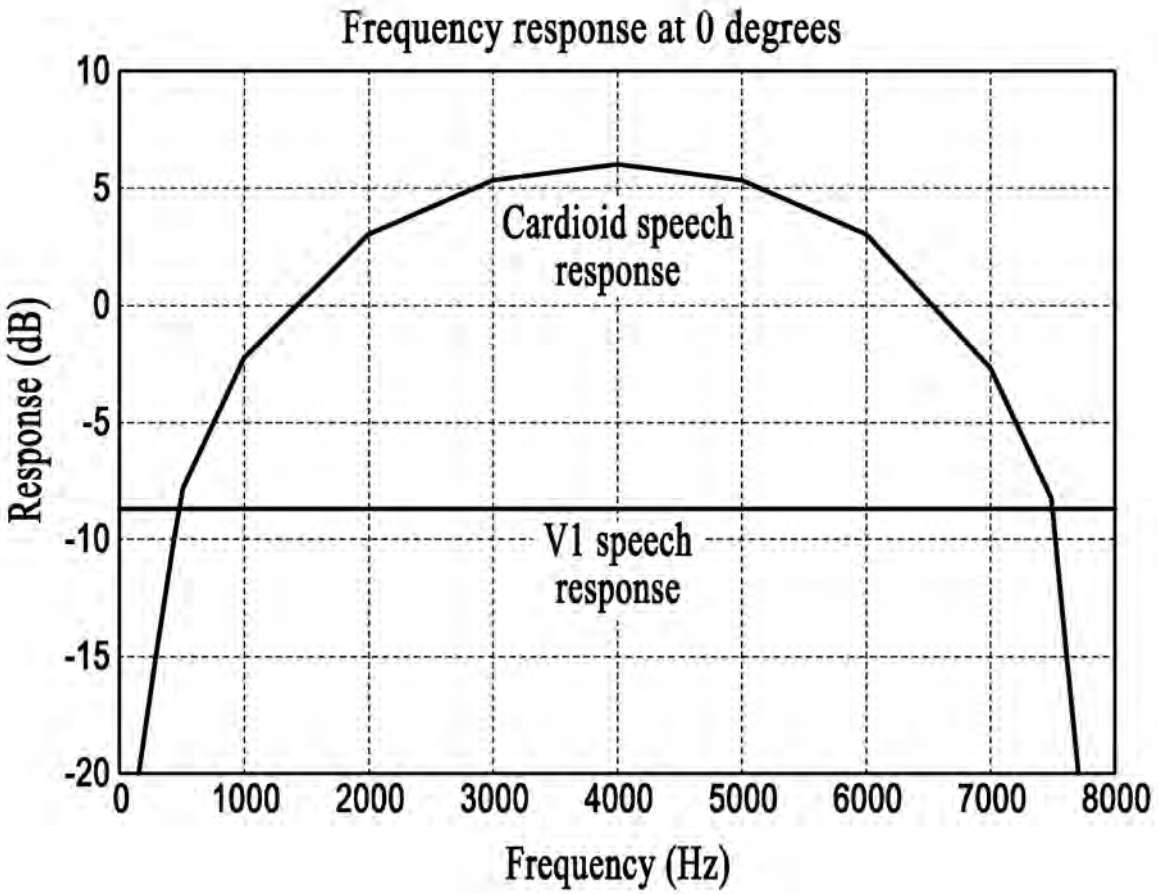
Frequency response at 0 degrees
10
5
0
-5
-10
-15
-20
Response (dB)
Cardioid speech response
V1 speech response
0
1000
2000
3000
4000
5000
6000
7000
8000
Frequency (Hz)

FIG.35

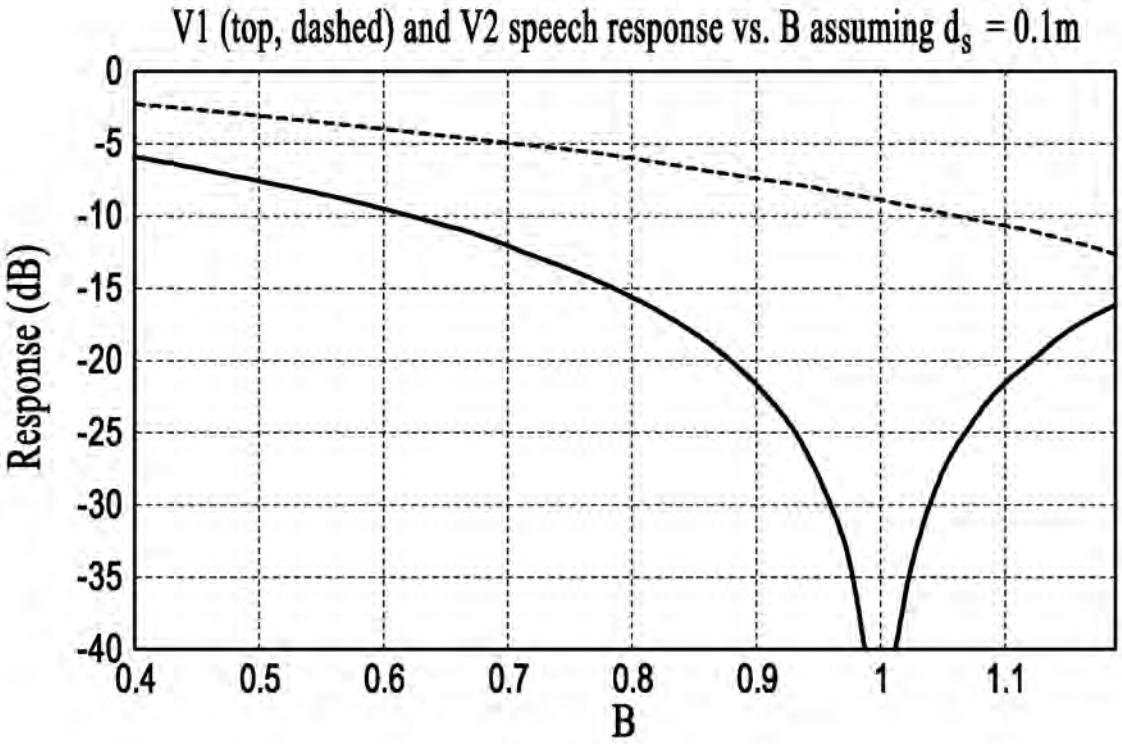
V1 (top, dashed) and V2 speech response vs. B assuming d_s = 0.1m
Response (dB)
0
-5
-10
-15
-20
-25
-30
-35
-40
0.4
0.5
0.6
0.7
0.8
0.9
1
1.1
B

FIG.36

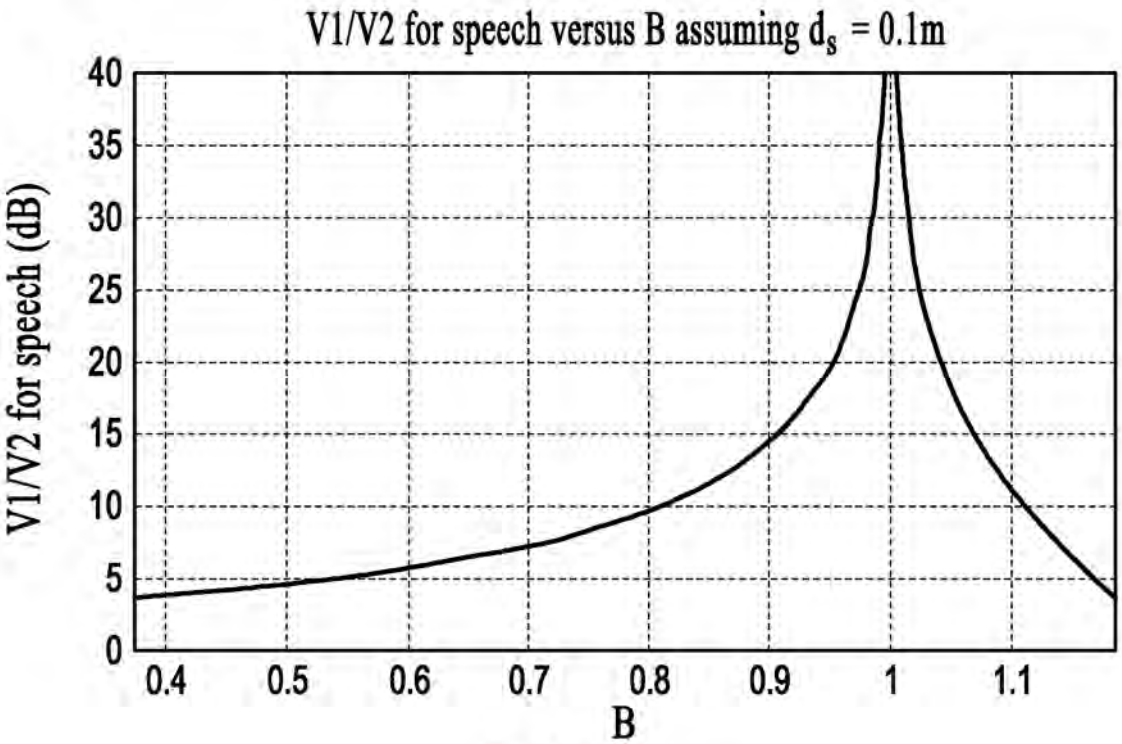
V1/V2 for speech versus B assuming d_s = 0.1m
V1/V2 for speech (dB)
40
35
30
25
20
15
10
5
0
0.4
0.5
0.6
0.7
0.8
0.9
1
1.1
B

FIG.37

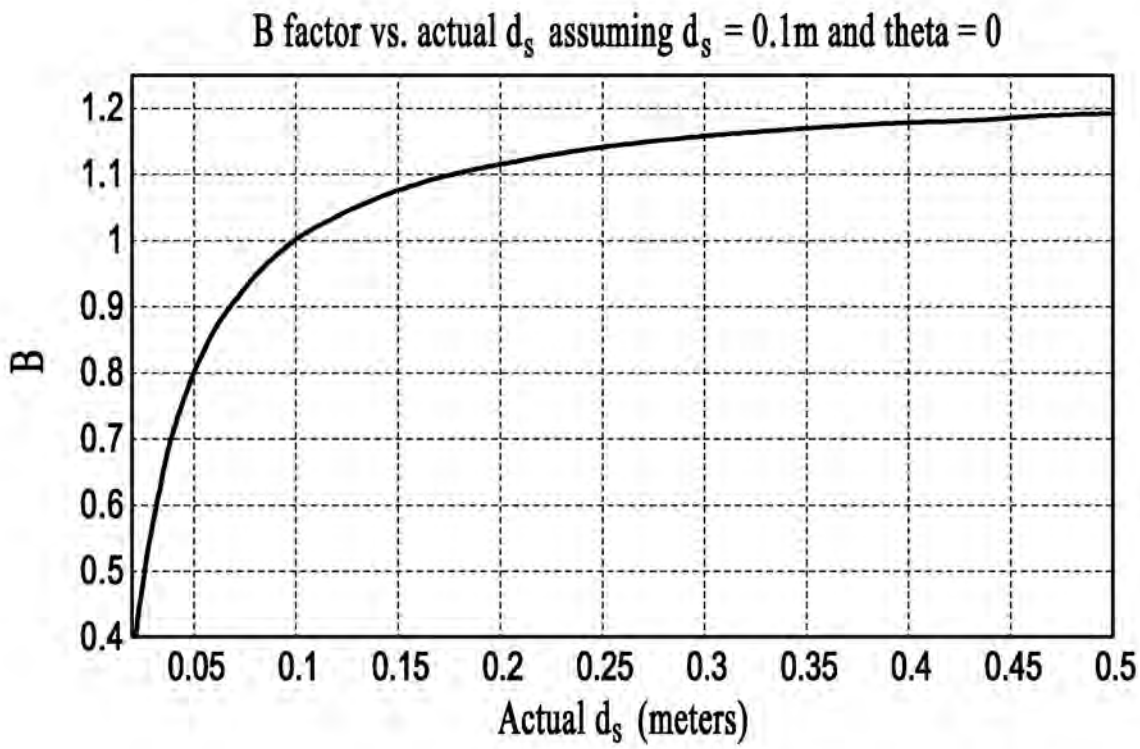
B factor vs. actual d_s assuming d_s = 0.1m and theta = 0
B
1.2
1.1
1
0.9
0.8
0.7
0.6
0.5
0.4
0.05
0.1
0.15
0.2
0.25
0.3
0.35
0.4
0.45
0.5
Actual d_s (meters)

FIG.38

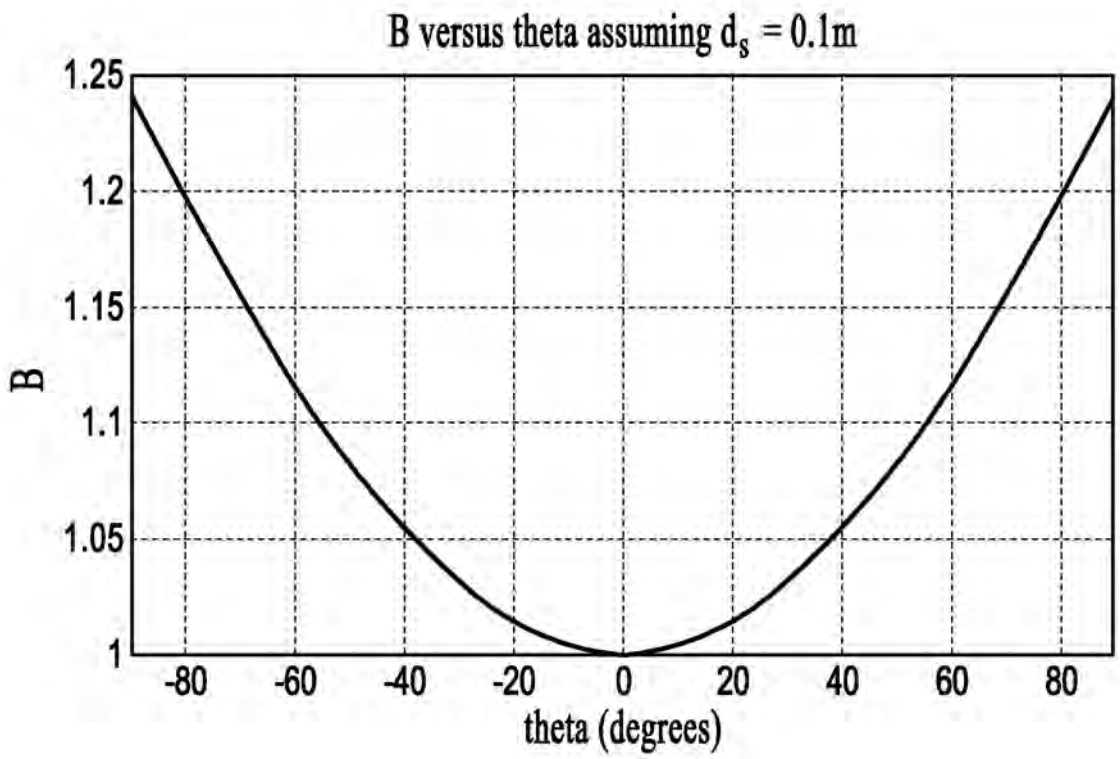
B versus theta assuming d_s = 0.1m
B
1.25
1.2
1.15
1.1
1.05
1
-80
-60
-40
-20
0
20
40
60
80
theta (degrees)

FIG.39

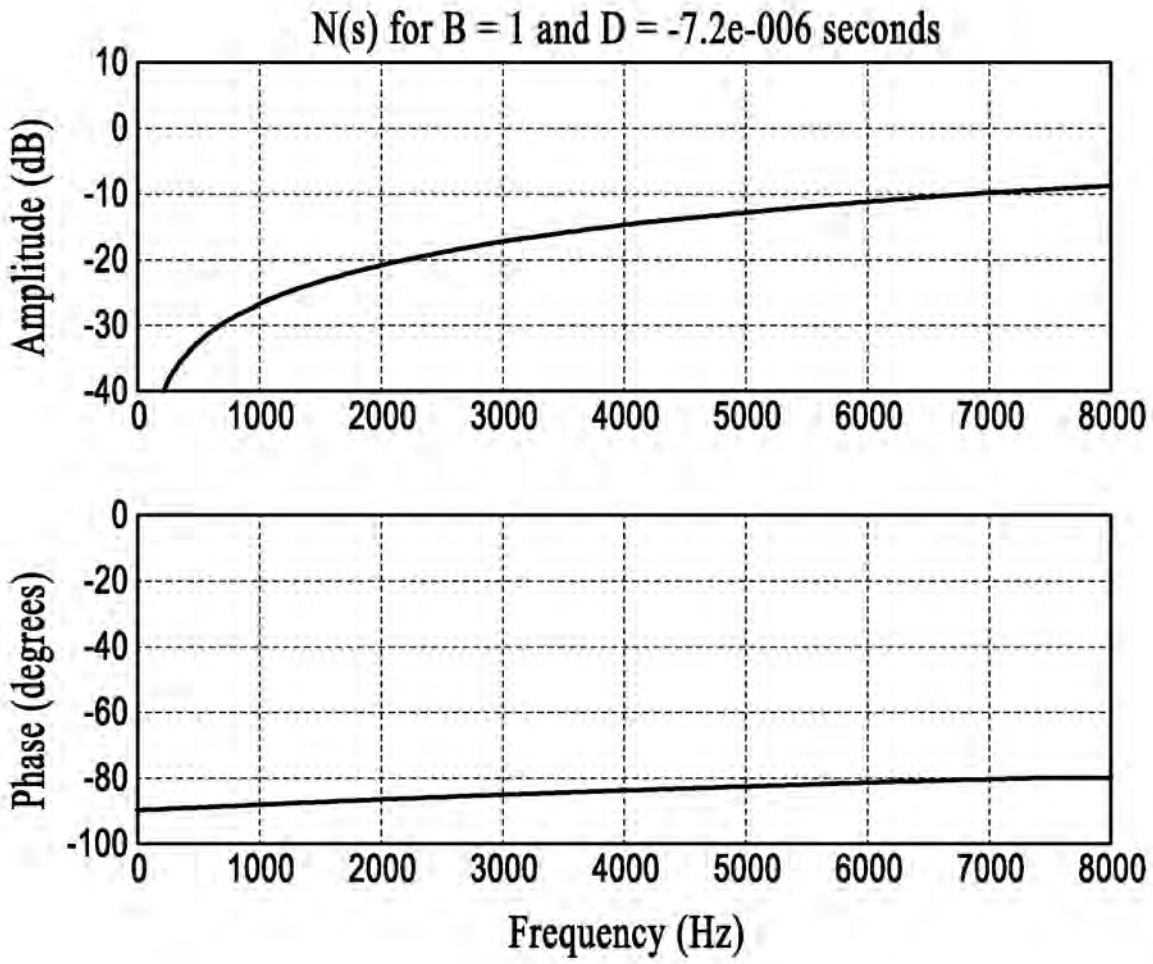
N(s) for B = 1 and D = -7.2e-006 seconds
Amplitude (dB)
10
0
-10
-20
-30
-40
0
1000
2000
3000
4000
5000
6000
7000
8000
Phase (degrees)
0
-20
-40
-60
-80
-100
Frequency (Hz)

FIG.40

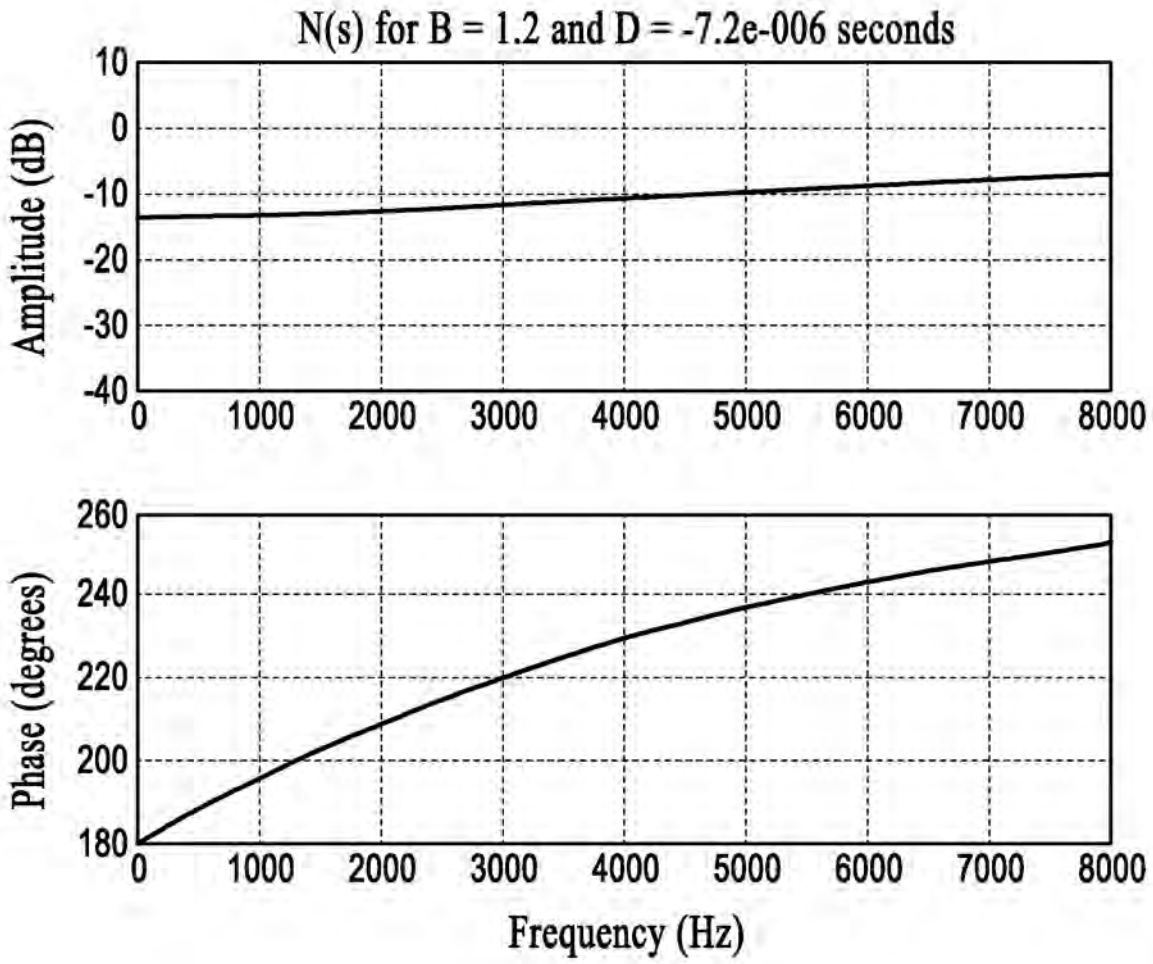
N(s) for B = 1.2 and D = -7.2e-006 seconds
Amplitude (dB)
10
0
-10
-20
-30
-40
0
1000
2000
3000
4000
5000
6000
7000
8000
Phase (degrees)
260
240
220
200
180
Frequency (Hz)

FIG.41

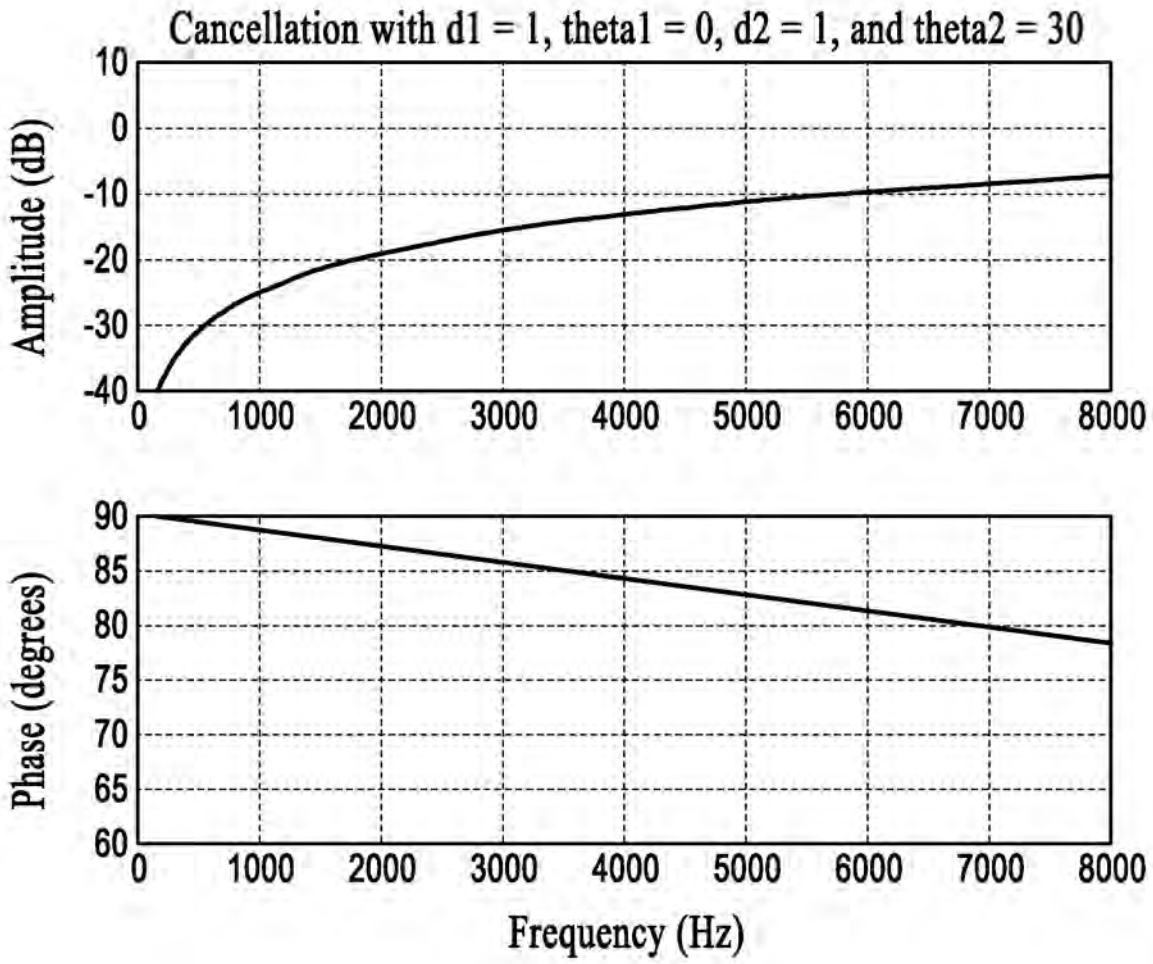
Cancellation with d1 = 1, theta1 = 0, d2 = 1, and theta2 = 30
Amplitude (dB)
10
0
-10
-20
-30
-40
0
1000
2000
3000
4000
5000
6000
7000
8000
Phase (degrees)
90
85
80
75
70
65
60
Frequency (Hz)

FIG.42

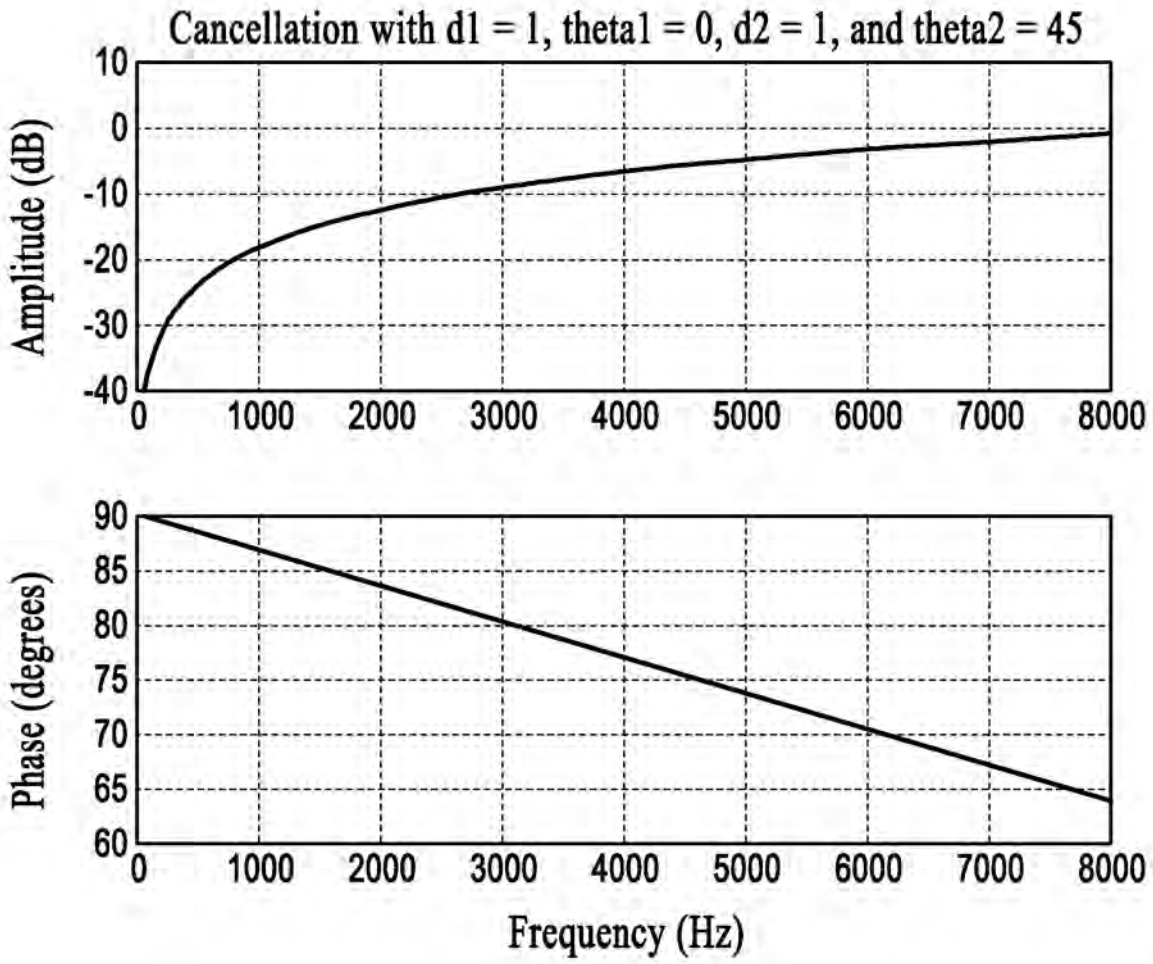
Cancellation with d1 = 1, theta1 = 0, d2 = 1, and theta2 = 45
Amplitude (dB)
10
0
-10
-20
-30
-40
0
1000
2000
3000
4000
5000
6000
7000
8000
Phase (degrees)
90
85
80
75
70
65
60
Frequency (Hz)

FIG.43

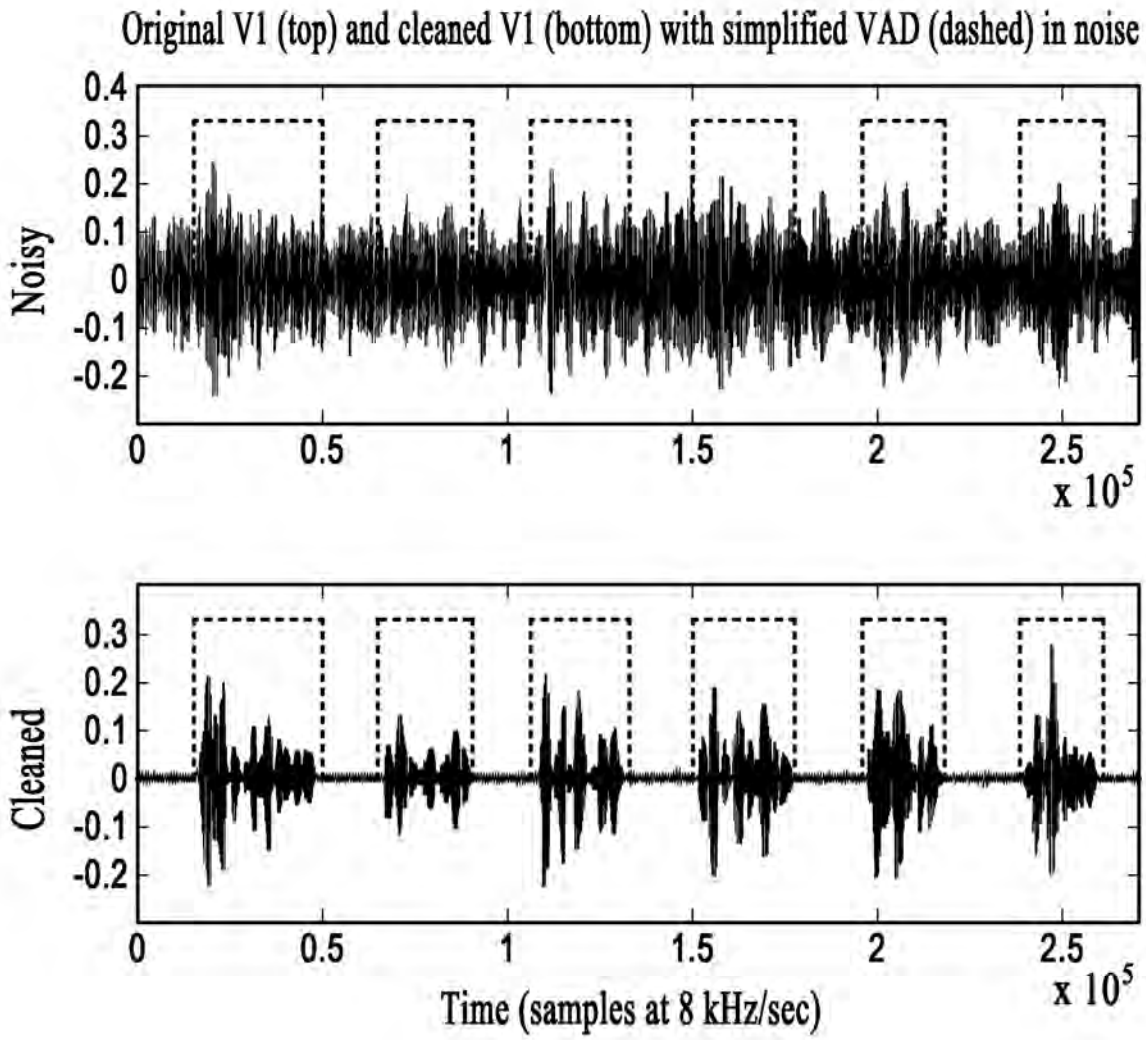
Original V1 (top) and cleaned V1 (bottom) with simplified VAD (dashed) in noise
Noisy
0.4
0.3
0.2
0.1
0
-0.1
-0.2
0
0.5
1
1.5
2
2.5
x 10^5
Cleaned
0.3
0.2
0.1
0
-0.1
-0.2
0
0.5
1
1.5
2
2.5
x 10^5
Time (samples at 8 kHz/sec)

FIG.44

Electronic Patent Application Fee Transmittal

Application Number:	12606140
Filing Date:	26-Oct-2009
Title of Invention:	Acoustic Voice Activity Detection (AVAD) for Electronic Systems
First Named Inventor/Applicant Name:	Nicolas Petit
Filer:	Richard L. Gregory/Rob Rathbun
Attorney Docket Number:	ALPH.P039

Filed as Large Entity

Utility under 35 USC 111(a) Filing Fees

Description	Fee Code	Quantity	Amount	Sub-Total in USD($)
Basic Filing:				
Pages:				
Claims:				
Miscellaneous-Filing:				
Late filing fee for oath or declaration	1051	1	130	130
Petition:				
Patent-Appeals-and-Interference:				
Post-Allowance-and-Post-Issuance:				
Extension-of-Time:				

Description	Fee Code	Quantity	Amount	Sub-Total in USD($)
Extension - 1 month with $0 paid	1251	1	130	130
Miscellaneous:				
		Total in USD ($)		**260**

Electronic Acknowledgement Receipt

EFS ID:	6918647
Application Number:	12606140
International Application Number:	
Confirmation Number:	2189
Title of Invention:	Acoustic Voice Activity Detection (AVAD) for Electronic Systems
First Named Inventor/Applicant Name:	Nicolas Petit
Customer Number:	53186
Filer:	Richard L. Gregory/Rob Rathbun
Filer Authorized By:	Richard L. Gregory
Attorney Docket Number:	ALPH.P039
Receipt Date:	01-FEB-2010
Filing Date:	26-OCT-2009
Time Stamp:	12:15:48
Application Type:	Utility under 35 USC 111(a)

Payment information:

Submitted with Payment	yes
Payment Type	Credit Card
Payment was successfully received in RAM	$260
RAM confirmation Number	17340
Deposit Account	
Authorized User	

File Listing:

Document Number	Document Description	File Name	File Size(Bytes)/ Message Digest	Multi Part /.zip	Pages (if appl.)

1		Missing_Parts_ALPHP039.pdf	985247 6ddb734b2f4f2a8a7178248bb2f8bf2434b4e7	yes	10

Multipart Description/PDF files in .zip description

Document Description	Start	End
Miscellaneous Incoming Letter	1	2
Oath or Declaration filed	3	6
Preliminary Amendment	7	9
Extension of Time	10	10

Warnings:

Information:

2	Drawings-only black and white line drawings	Replacement_Drawings_ALPHP039.pdf	2202789 f87d89c0463bdf964aa41e81cfe17c5f31c31793	no	35

Warnings:

Information:

3	Fee Worksheet (PTO-875)	fee-info.pdf	32153 aa9dc5a87696028b356aa8ea9b1b32f04496c49	no	2

Warnings:

Information:

Total Files Size (in bytes):	3220189

This Acknowledgement Receipt evidences receipt on the noted date by the USPTO of the indicated documents, characterized by the applicant, and including page counts, where applicable. It serves as evidence of receipt similar to a Post Card, as described in MPEP 503.

<u>New Applications Under 35 U.S.C. 111</u>
If a new application is being filed and the application includes the necessary components for a filing date (see 37 CFR 1.53(b)-(d) and MPEP 506), a Filing Receipt (37 CFR 1.54) will be issued in due course and the date shown on this Acknowledgement Receipt will establish the filing date of the application.

<u>National Stage of an International Application under 35 U.S.C. 371</u>
If a timely submission to enter the national stage of an international application is compliant with the conditions of 35 U.S.C. 371 and other applicable requirements a Form PCT/DO/EO/903 indicating acceptance of the application as a national stage submission under 35 U.S.C. 371 will be issued in addition to the Filing Receipt, in due course.

<u>New International Application Filed with the USPTO as a Receiving Office</u>
If a new international application is being filed and the international application includes the necessary components for an international filing date (see PCT Article 11 and MPEP 1810), a Notification of the International Application Number and of the International Filing Date (Form PCT/RO/105) will be issued in due course, subject to prescriptions concerning national security, and the date shown on this Acknowledgement Receipt will establish the international filing date of the application.

Attorney Docket No. ALPH.P039 Patent

Transmittal of Documents

Certification Under 37 C.F.R. §1.8(a)

Transmitted via **February 1, 2010**
Date of Transmission

USPTO EFS

I hereby certify that this document, and any other accompanying documents referred to herein are being transmitted to the United States Patent Office via EFS in accordance with 37 C.F.R. §1.6(a)(4) on the date indicated above.

Rob Rathbun
(Print Name of Person Transmitting Documents)

(Signature of Person Transmitting Documents)

Response to Notice to File Missing Parts of Nonprovisional Application;
Declaration in Compliance with 37 CFR §1.36;
Extension of Time (1) Month;
Submission of Preliminary Amendment;
Replacement Drawings – 35 Sheets;
Electronic Payment of Fees.

Atty. Docket No.: ALPH.P039 *PATENT*

IN THE UNITED STATES PATENT OFFICE

In Re Patent Application of:	)	Examiner: Not Yet Assigned
First Named Inventor: Nicolas Petit	)	Art Unit: 2614
Application No. 12/606,140	)	
Filed: October 26, 2009	)	
For: ACOUSTIC VOICE ACTIVITY DETECTION (AVAD) FOR ELECTRONIC SYSTEMS	)	

Mail Stop Missing Parts
Commissioner for Patents
P.O. Box 1450
Alexandria, VA 22313-1450

RESPONSE TO NOTICE TO FILE MISSING PARTS OF NONPROVISIONAL APPLICATION

Sir:

In response to a Notice to File Missing Parts of Nonprovisional Application mailed November 12, 2009 in connection with the above-referenced patent application, Applicants submit herewith:

1. Declaration in compliance with 37 CFR § 1.36;
2. Preliminary amendment, including replacement drawings (35 sheets);
3. One (1) month Extension of Time;
4. Electronic payment via credit card in the amount of $260.00.

Respectfully Submitted,
Courtney Staniford & Gregory & LLP

Date February 1, 2010

R. Gregory

Richard L. Gregory, Jr.
Reg. No. 42,607

DECLARATION AND POWER OF ATTORNEY
(Docket No. ALPH.P039)

As a below-named inventor, I hereby declare that:

My residence, mailing address, and citizenship are as stated below next to my name.

I believe I am an original, first and joint inventor of the inventions described and claimed in the specification filed:

_____ HEREWITH,
__X__ on October 26, 2009, Application Number 12/606,140,
and entitled:

ACOUSTIC VOICE ACTIVITY DETECTION (AVAD) FOR ELECTRONIC SYSTEMS

I hereby state that I have reviewed and understand the contents of the above-identified specification, including the claims, as amended by any amendment specifically referred to herein.

I acknowledge the duty to disclose information which is material to patentability as defined in 37 CFR 1.56, including for continuation-in-part applications, material information which became available between the filing date of the prior application and the national or PCT international filing date of the continuation-in-part application.

The undersigned hereby grants the USPTO authority to provide the European Patent Office (EPO), the Japan Patent Office (JPO), and any other intellectual property offices in which a foreign application claiming priority to the above-identified application is filed access to the above-identified patent application. See 37 CFR 1.14(c) and (h).

In accordance with 37 CFR 1.14(h)(3), access will be provided to a copy of the application-as-filed with respect to: 1) the above-identified application, 2) any foreign application to which the above-identified application claims priority under 35 USC 119(a)-(d) if a copy of the foreign application that satisfies the certified copy requirement of 37

CFR 1.55 has been filed in the above-identified US application, and 3) any U.S. application from which benefit is sought in the above-identified application.

In accordance with 37 CFR 1.14(c), access may be provided to information concerning the date of filing the Authorization to Permit Access to Application by Participating Offices.

I hereby declare that all statements made herein of my own knowledge are true and that all statements made on information and belief are believed to be true; and further that these statements were made with the knowledge that willful false statements and the like so made are punishable by fine or imprisonment, or both, under Section 1001 of Title 18 of the United States Code and that such willful false statements may jeopardize the validity of the application or any patent issued thereon.

I hereby appoint the **registered patent practitioners associated with Customer Number 53186** with full power of substitution and revocation, to prosecute this application and transact all business in the U.S. Patent and Trademark Office connected therewith. The current mailing address and telephone and facsimile numbers are:

10001 N. De Anza Blvd., Suite 300
Cupertino, California 95014

Tel: (408) 342-1900
Fax: (408) 342-1909

Inventor:	Nicolas PETIT		
Residence City:	San Francisco	Residence State:	CA
Residence Country:	US	Citizenship:	BE
Mailing Address	99 Rhode Island Street, 3rd Floor San Francisco, CA 94103 US		

Date: 01/11/2010

Nicolas PETIT

Inventor:	Gregory BURNETT		
Residence City:	Dodge Center	Residence State:	MN
Residence Country:	US	Citizenship:	US
Mailing Address	99 Rhode Island Street, 3rd Floor San Francisco, CA 94103 US		

Date: 1/6/0

Gregory BURNETT

Inventor:	Zhinian JING		
Residence City:	San Francisco	Residence State:	CA
Residence Country:	US	Citizenship:	US
Mailing Address	99 Rhode Island Street, 3rd Floor San Francisco, CA 94103 US		

Date: _____

Zhinian JING

Inventor:	Gregory BURNETT		
Residence City:	Dodge Center	Residence State:	MN
Residence Country:	US	Citizenship:	US
Mailing Address	99 Rhode Island Street, 3rd Floor San Francisco, CA 94103 US		

Date: _____

_____
Gregory BURNETT

Inventor:	Zhinian JING		
Residence City:	San Francisco	Residence State:	CA
Residence Country:	US	Citizenship:	US
Mailing Address	99 Rhode Island Street, 3rd Floor San Francisco, CA 94103 US		

Date: 1/11/10

Zhinian JING

UNITED STATES PATENT AND TRADEMARK OFFICE

UNITED STATES DEPARTMENT OF COMMERCE
United States Patent and Trademark Office
Address: COMMISSIONER FOR PATENTS
P.O. Box 1450
Alexandria, Virginia 22313-1450
www.uspto.gov

APPLICATION NUMBER	FILING or 371(c) DATE	GRP ART UNIT	FIL FEE REC'D	ATTY.DOCKET.NO	TOT CLAIMS	IND CLAIMS
12/606,140	10/26/2009	2614	2468	ALPH.P039	44	3

CONFIRMATION NO. 2189

UPDATED FILING RECEIPT

53186
COURTNEY STANIFORD & GREGORY LLP
10001 N. De Anza Blvd., Suite 300
Cupertino, CA 95014

OC000000040085317

Date Mailed: 02/18/2010

Receipt is acknowledged of this non-provisional patent application. The application will be taken up for examination in due course. Applicant will be notified as to the results of the examination. Any correspondence concerning the application must include the following identification information: the U.S. APPLICATION NUMBER, FILING DATE, NAME OF APPLICANT, and TITLE OF INVENTION. Fees transmitted by check or draft are subject to collection. Please verify the accuracy of the data presented on this receipt. **If an error is noted on this Filing Receipt, please submit a written request for a Filing Receipt Correction. Please provide a copy of this Filing Receipt with the changes noted thereon. If you received a "Notice to File Missing Parts" for this application, please submit any corrections to this Filing Receipt with your reply to the Notice. When the USPTO processes the reply to the Notice, the USPTO will generate another Filing Receipt incorporating the requested corrections**

Applicant(s)

Nicolas Petit, San Francisco, CA;
Gregory Burnett, Dodge Center, MN;
Zhinian Jing, San Francisco, CA;

Power of Attorney: The patent practitioners associated with Customer Number 53186

Domestic Priority data as claimed by applicant

This appln claims benefit of 61/108,426 10/24/2008
and is a CIP of 11/805,987 05/25/2007
and is a CIP of 12/139,333 06/13/2008

Foreign Applications

Permission to Access - A proper **Authorization to Permit Access to Application by Participating Offices** (PTO/SB/39 or its equivalent) has been received by the USPTO.

If Required, Foreign Filing License Granted: 11/09/2009

The country code and number of your priority application, to be used for filing abroad under the Paris Convention, is **US 12/606,140**

Projected Publication Date: 05/27/2010

Non-Publication Request: No

Early Publication Request: No

Title

Acoustic Voice Activity Detection (AVAD) for Electronic Systems

Preliminary Class

381

PROTECTING YOUR INVENTION OUTSIDE THE UNITED STATES

Since the rights granted by a U.S. patent extend only throughout the territory of the United States and have no effect in a foreign country, an inventor who wishes patent protection in another country must apply for a patent in a specific country or in regional patent offices. Applicants may wish to consider the filing of an international application under the Patent Cooperation Treaty (PCT). An international (PCT) application generally has the same effect as a regular national patent application in each PCT-member country. The PCT process **simplifies** the filing of patent applications on the same invention in member countries, but **does not result** in a grant of "an international patent" and does not eliminate the need of applicants to file additional documents and fees in countries where patent protection is desired.

Almost every country has its own patent law, and a person desiring a patent in a particular country must make an application for patent in that country in accordance with its particular laws. Since the laws of many countries differ in various respects from the patent law of the United States, applicants are advised to seek guidance from specific foreign countries to ensure that patent rights are not lost prematurely.

Applicants also are advised that in the case of inventions made in the United States, the Director of the USPTO must issue a license before applicants can apply for a patent in a foreign country. The filing of a U.S. patent application serves as a request for a foreign filing license. The application's filing receipt contains further information and guidance as to the status of applicant's license for foreign filing.

Applicants may wish to consult the USPTO booklet, "General Information Concerning Patents" (specifically, the section entitled "Treaties and Foreign Patents") for more information on timeframes and deadlines for filing foreign patent applications. The guide is available either by contacting the USPTO Contact Center at 800-786-9199, or it can be viewed on the USPTO website at http://www.uspto.gov/web/offices/pac/doc/general/index.html.

For information on preventing theft of your intellectual property (patents, trademarks and copyrights), you may wish to consult the U.S. Government website, http://www.stopfakes.gov. Part of a Department of Commerce initiative, this website includes self-help "toolkits" giving innovators guidance on how to protect intellectual property in specific countries such as China, Korea and Mexico. For questions regarding patent enforcement issues, applicants may call the U.S. Government hotline at 1-866-999-HALT (1-866-999-4158).

LICENSE FOR FOREIGN FILING UNDER

Title 35, United States Code, Section 184

Title 37, Code of Federal Regulations, 5.11 & 5.15

GRANTED

The applicant has been granted a license under 35 U.S.C. 184, if the phrase "IF REQUIRED, FOREIGN FILING LICENSE GRANTED" followed by a date appears on this form. Such licenses are issued in all applications where the conditions for issuance of a license have been met, regardless of whether or not a license may be required as

set forth in 37 CFR 5.15. The scope and limitations of this license are set forth in 37 CFR 5.15(a) unless an earlier license has been issued under 37 CFR 5.15(b). The license is subject to revocation upon written notification. The date indicated is the effective date of the license, unless an earlier license of similar scope has been granted under 37 CFR 5.13 or 5.14.

This license is to be retained by the licensee and may be used at any time on or after the effective date thereof unless it is revoked. This license is automatically transferred to any related applications(s) filed under 37 CFR 1.53(d). This license is not retroactive.

The grant of a license does not in any way lessen the responsibility of a licensee for the security of the subject matter as imposed by any Government contract or the provisions of existing laws relating to espionage and the national security or the export of technical data. Licensees should apprise themselves of current regulations especially with respect to certain countries, of other agencies, particularly the Office of Defense Trade Controls, Department of State (with respect to Arms, Munitions and Implements of War (22 CFR 121-128)); the Bureau of Industry and Security, Department of Commerce (15 CFR parts 730-774); the Office of Foreign AssetsControl, Department of Treasury (31 CFR Parts 500+) and the Department of Energy.

NOT GRANTED

No license under 35 U.S.C. 184 has been granted at this time, if the phrase "IF REQUIRED, FOREIGN FILING LICENSE GRANTED" DOES NOT appear on this form. Applicant may still petition for a license under 37 CFR 5.12, if a license is desired before the expiration of 6 months from the filing date of the application. If 6 months has lapsed from the filing date of this application and the licensee has not received any indication of a secrecy order under 35 U.S.C. 181, the licensee may foreign file the application pursuant to 37 CFR 5.15(b).

UNITED STATES PATENT AND TRADEMARK OFFICE

UNITED STATES DEPARTMENT OF COMMERCE
United States Patent and Trademark Office
Address: COMMISSIONER FOR PATENTS
P.O. Box 1450
Alexandria, Virginia 22313-1450
www.uspto.gov

APPLICATION NUMBER	FILING OR 371(C) DATE	FIRST NAMED APPLICANT	ATTY. DOCKET NO./TITLE
12/606,140	10/26/2009	Nicolas Petit	ALPH.P039

CONFIRMATION NO. 2189

53186
COURTNEY STANIFORD & GREGORY LLP
10001 N. De Anza Blvd., Suite 300
Cupertino, CA 95014

PUBLICATION NOTICE

OC000000041828087

Title: Acoustic Voice Activity Detection (AVAD) for Electronic Systems

Publication No.US-2010-0128881-A1
Publication Date:05/27/2010

NOTICE OF PUBLICATION OF APPLICATION

The above-identified application will be electronically published as a patent application publication pursuant to 37 CFR 1.211, et seq. The patent application publication number and publication date are set forth above.

The publication may be accessed through the USPTO's publically available Searchable Databases via the Internet at www.uspto.gov. The direct link to access the publication is currently http://www.uspto.gov/patft/.

The publication process established by the Office does not provide for mailing a copy of the publication to applicant. A copy of the publication may be obtained from the Office upon payment of the appropriate fee set forth in 37 CFR 1.19(a)(1). Orders for copies of patent application publications are handled by the USPTO's Office of Public Records. The Office of Public Records can be reached by telephone at (703) 308-9726 or (800) 972-6382, by facsimile at (703) 305-8759, by mail addressed to the United States Patent and Trademark Office, Office of Public Records, Alexandria, VA 22313-1450 or via the Internet.

In addition, information on the status of the application, including the mailing date of Office actions and the dates of receipt of correspondence filed in the Office, may also be accessed via the Internet through the Patent Electronic Business Center at www.uspto.gov using the public side of the Patent Application Information and Retrieval (PAIR) system. The direct link to access this status information is currently http://pair.uspto.gov/. Prior to publication, such status information is confidential and may only be obtained by applicant using the private side of PAIR.

Further assistance in electronically accessing the publication, or about PAIR, is available by calling the Patent Electronic Business Center at 1-866-217-9197.

Office of Data Managment, Application Assistance Unit (571) 272-4000, or (571) 272-4200, or 1-888-786-0101

UNITED STATES PATENT AND TRADEMARK OFFICE

UNITED STATES DEPARTMENT OF COMMERCE
United States Patent and Trademark Office
Address: COMMISSIONER FOR PATENTS
P.O. Box 1450
Alexandria, Virginia 22313-1450
www.uspto.gov

APPLICATION NUMBER	PATENT NUMBER	GROUP ART UNIT	FILE WRAPPER LOCATION
12/606,140		2626	

OC000000046220584

Correspondence Address/Fee Address Change

The following fields have been set to Customer Number 98195 on 08/09/2010

- **Correspondence Address**
- **Maintenance Fee Address**
- **Power of Attorney Address**

The address of record for Customer Number 98195 is:

98195
Gregory & Martensen LLP
2018 Bissonnet Street
Houston, TX 77005

PART 1 - ATTORNEY/APPLICANT COPY

PTO/SB/80 (11-08)
Approved for use through 11/30/2011. OMB 0651-0035
U.S. Patent and Trademark Office; U.S. DEPARTMENT OF COMMERCE
Under the Paperwork Reduction Act of 1995, no persons are required to respond to a collection of information unless it displays a valid OMB control number.

POWER OF ATTORNEY TO PROSECUTE APPLICATIONS BEFORE THE USPTO

I hereby revoke all previous powers of attorney given in the application identified in the attached statement under 37 CFR 3.73(b).

I hereby appoint:

☑ Practitioners associated with the Customer Number: 15516

OR

☐ Practitioner(s) named below (if more than ten patent practitioners are to be named, then a customer number must be used):

Name	Registration Number	Name	Registration Number

as attorney(s) or agent(s) to represent the undersigned before the United States Patent and Trademark Office (USPTO) in connection with any and all patent applications assigned only to the undersigned according to the USPTO assignment records or assignment documents attached to this form in accordance with 37 CFR 3.73(b).

Please change the correspondence address for the application identified in the attached statement under 37 CFR 3.73(b) to:

☑ The address associated with Customer Number: 15516

OR

☐ Firm or Individual Name			
Address			
City		State	Zip
Country			
Telephone		Email	

Assignee Name and Address:

AliphCom, Inc.
410 Jessie Street, Unit 601
San Francisco, CA 94103

A copy of this form, together with a statement under 37 CFR 3.73(b) (Form PTO/SB/96 or equivalent) is required to be filed in each application in which this form is used. The statement under 37 CFR 3.73(b) may be completed by one of the practitioners appointed in this form if the appointed practitioner is authorized to act on behalf of the assignee, and must identify the application in which this Power of Attorney is to be filed.

SIGNATURE of Assignee of Record

The individual whose signature and title is supplied below is authorized to act on behalf of the assignee

Signature		Date	11-21-2011
Name	Michael Edward Smith Luna	Telephone	(877) 254-7426
Title	Chief Technology Officer, AliphCom, Inc.		

This collection of information is required by 37 CFR 1.31, 1.32 and 1.33. The information is required to obtain or retain a benefit by the public which is to file (and by the USPTO to process) an application. Confidentiality is governed by 35 U.S.C. 122 and 37 CFR 1.11 and 1.14. This collection is estimated to take 3 minutes to complete, including gathering, preparing, and submitting the completed application form to the USPTO. Time will vary depending upon the individual case. Any comments on the amount of time you require to complete this form and/or suggestions for reducing this burden, should be sent to the Chief Information Officer, U.S. Patent and Trademark Office, U.S. Department of Commerce, P.O. Box 1450, Alexandria, VA 22313-1450. DO NOT SEND FEES OR COMPLETED FORMS TO THIS ADDRESS. **SEND TO: Commissioner for Patents, P.O. Box 1450, Alexandria, VA 22313-1450.**

If you need assistance in completing the form, call 1-800-PTO-9199 and select option 2.

PTO/SB/96 (07-09)
Approved for use through 07/31/2012. OMB 0651-0031
U.S. Patent and Trademark Office; U.S. DEPARTMENT OF COMMERCE
Under the Paperwork Reduction Act of 1995, no persons are required to respond to a collection of information unless it displays a valid OMB control number.

STATEMENT UNDER 37 CFR 3.73(b)

Applicant/Patent Owner: Nicolas Petit, Gregory Burnett, Zhinian Jing

Application No./Patent No.: 12/606,140 Filed/Issue Date: 10/26/2009

Titled:
ACOUSTIC VOICE ACTIVITY DETECTION (AVAD) FOR ELECTRONIC SYSTEMS

AliphCom, Inc., a Corporation
(Name of Assignee) (Type of Assignee, e.g., corporation, partnership, university, government agency, etc.)

states that it is:

1. [X] the assignee of the entire right, title, and interest in:

2. [ ] an assignee of less than the entire right, title, and interest in
(The extent (by percentage) of its ownership interest is _____ %); or

3. [ ] the assignee of an undivided interest in the entirety of (a complete assignment from one of the joint inventors was made)

the patent application/patent identified above, by virtue of either:

A. [X] An assignment from the inventor(s) of the patent application/patent identified above. The assignment was recorded in the United States Patent and Trademark Office at Reel 023878, Frame 0030, or for which a copy therefore is attached.

OR

B. [ ] A chain of title from the inventor(s), of the patent application/patent identified above, to the current assignee as follows:

1. From: _____ To: _____
The document was recorded in the United States Patent and Trademark Office at
Reel _____, Frame _____, or for which a copy thereof is attached.

2. From: _____ To: _____
The document was recorded in the United States Patent and Trademark Office at
Reel _____, Frame _____, or for which a copy thereof is attached.

3. From: _____ To: _____
The document was recorded in the United States Patent and Trademark Office at
Reel _____, Frame _____, or for which a copy thereof is attached.

[ ] Additional documents in the chain of title are listed on a supplemental sheet(s).

[X] As required by 37 CFR 3.73(b)(1)(i), the documentary evidence of the chain of title from the original owner to the assignee was, or concurrently is being, submitted for recordation pursuant to 37 CFR 3.11.

[NOTE: A separate copy (*i.e.*, a true copy of the original assignment document(s)) must be submitted to Assignment Division in accordance with 37 CFR Part 3, to record the assignment in the records of the USPTO. See MPEP 302.08]

The undersigned (whose title is supplied below) is authorized to act on behalf of the assignee.

/Scott S. Kokka/	November 30, 2011
Signature	Date
Scott S. Kokka	Attorney of Record
Printed or Typed Name	Title

This collection of information is required by 37 CFR 3.73(b). The information is required to obtain or retain a benefit by the public which is to file (and by the USPTO to process) an application. Confidentiality is governed by 35 U.S.C. 122 and 37 CFR 1.11 and 1.14. This collection is estimated to take 12 minutes to complete, including gathering, preparing, and submitting the completed application form to the USPTO. Time will vary depending upon the individual case. Any comments on the amount of time you require to complete this form and/or suggestions for reducing this burden, should be sent to the Chief Information Officer, U.S. Patent and Trademark Office, U.S. Department of Commerce, P.O. Box 1450, Alexandria, VA 22313-1450. DO NOT SEND FEES OR COMPLETED FORMS TO THIS ADDRESS. **SEND TO: Commissioner for Patents, P.O. Box 1450, Alexandria, VA 22313-1450.**

If you need assistance in completing the form, call 1-800-PTO-9199 and select option 2.

Privacy Act Statement

The **Privacy Act of 1974 (P.L. 93-579)** requires that you be given certain information in connection with your submission of the attached form related to a patent application or patent. Accordingly, pursuant to the requirements of the Act, please be advised that: (1) the general authority for the collection of this information is 35 U.S.C. 2(b)(2); (2) furnishing of the information solicited is voluntary; and (3) the principal purpose for which the information is used by the U.S. Patent and Trademark Office is to process and/or examine your submission related to a patent application or patent. If you do not furnish the requested information, the U.S. Patent and Trademark Office may not be able to process and/or examine your submission, which may result in termination of proceedings or abandonment of the application or expiration of the patent.

The information provided by you in this form will be subject to the following routine uses:

1. The information on this form will be treated confidentially to the extent allowed under the Freedom of Information Act (5 U.S.C. 552) and the Privacy Act (5 U.S.C 552a). Records from this system of records may be disclosed to the Department of Justice to determine whether disclosure of these records is required by the Freedom of Information Act.
2. A record from this system of records may be disclosed, as a routine use, in the course of presenting evidence to a court, magistrate, or administrative tribunal, including disclosures to opposing counsel in the course of settlement negotiations.
3. A record in this system of records may be disclosed, as a routine use, to a Member of Congress submitting a request involving an individual, to whom the record pertains, when the individual has requested assistance from the Member with respect to the subject matter of the record.
4. A record in this system of records may be disclosed, as a routine use, to a contractor of the Agency having need for the information in order to perform a contract. Recipients of information shall be required to comply with the requirements of the Privacy Act of 1974, as amended, pursuant to 5 U.S.C. 552a(m).
5. A record related to an International Application filed under the Patent Cooperation Treaty in this system of records may be disclosed, as a routine use, to the International Bureau of the World Intellectual Property Organization, pursuant to the Patent Cooperation Treaty.
6. A record in this system of records may be disclosed, as a routine use, to another federal agency for purposes of National Security review (35 U.S.C. 181) and for review pursuant to the Atomic Energy Act (42 U.S.C. 218(c)).
7. A record from this system of records may be disclosed, as a routine use, to the Administrator, General Services, or his/her designee, during an inspection of records conducted by GSA as part of that agency's responsibility to recommend improvements in records management practices and programs, under authority of 44 U.S.C. 2904 and 2906. Such disclosure shall be made in accordance with the GSA regulations governing inspection of records for this purpose, and any other relevant (*i.e.*, GSA or Commerce) directive. Such disclosure shall not be used to make determinations about individuals.
8. A record from this system of records may be disclosed, as a routine use, to the public after either publication of the application pursuant to 35 U.S.C. 122(b) or issuance of a patent pursuant to 35 U.S.C. 151. Further, a record may be disclosed, subject to the limitations of 37 CFR 1.14, as a routine use, to the public if the record was filed in an application which became abandoned or in which the proceedings were terminated and which application is referenced by either a published application, an application open to public inspection or an issued patent.
9. A record from this system of records may be disclosed, as a routine use, to a Federal, State, or local law enforcement agency, if the USPTO becomes aware of a violation or potential violation of law or regulation.

Electronic Acknowledgement Receipt

EFS ID:	11516903
Application Number:	12606140
International Application Number:	
Confirmation Number:	2189
Title of Invention:	Acoustic Voice Activity Detection (AVAD) for Electronic Systems
First Named Inventor/Applicant Name:	Nicolas Petit
Customer Number:	98195
Filer:	Scott Susumu Kokka
Filer Authorized By:	
Attorney Docket Number:	ALPH.P039
Receipt Date:	30-NOV-2011
Filing Date:	26-OCT-2009
Time Stamp:	22:34:49
Application Type:	Utility under 35 USC 111(a)

Payment information:

Submitted with Payment	no

File Listing:

Document Number	Document Description	File Name	File Size(Bytes)/ Message Digest	Multi Part /.zip	Pages (if appl.)
1		ALI-055CON1CIP2_GPOA_and_Stmt_37CFR373b_asfiled.pdf	915676 [illegible]	yes	3

	Multipart Description/PDF files in .zip description		
	Document Description	**Start**	**End**
	Power of Attorney	1	1
	Assignee showing of ownership per 37 CFR 3.73(b).	2	3
Warnings:			
Information:			
	Total Files Size (in bytes):	915676	

This Acknowledgement Receipt evidences receipt on the noted date by the USPTO of the indicated documents, characterized by the applicant, and including page counts, where applicable. It serves as evidence of receipt similar to a Post Card, as described in MPEP 503.

New Applications Under 35 U.S.C. 111
If a new application is being filed and the application includes the necessary components for a filing date (see 37 CFR 1.53(b)-(d) and MPEP 506), a Filing Receipt (37 CFR 1.54) will be issued in due course and the date shown on this Acknowledgement Receipt will establish the filing date of the application.

National Stage of an International Application under 35 U.S.C. 371
If a timely submission to enter the national stage of an international application is compliant with the conditions of 35 U.S.C. 371 and other applicable requirements a Form PCT/DO/EO/903 indicating acceptance of the application as a national stage submission under 35 U.S.C. 371 will be issued in addition to the Filing Receipt, in due course.

New International Application Filed with the USPTO as a Receiving Office
If a new international application is being filed and the international application includes the necessary components for an international filing date (see PCT Article 11 and MPEP 1810), a Notification of the International Application Number and of the International Filing Date (Form PCT/RO/105) will be issued in due course, subject to prescriptions concerning national security, and the date shown on this Acknowledgement Receipt will establish the international filing date of the application.

PTO/SB/80 (11-08)
Approved for use through 11/30/2011. OMB 0651-0035
U.S. Patent and Trademark Office; U.S. DEPARTMENT OF COMMERCE
Under the Paperwork Reduction Act of 1995, no persons are required to respond to a collection of information unless it displays a valid OMB control number.

POWER OF ATTORNEY TO PROSECUTE APPLICATIONS BEFORE THE USPTO

I hereby revoke all previous powers of attorney given in the application identified in the attached statement under 37 CFR 3.73(b).

I hereby appoint:

☑ Practitioners associated with the Customer Number: 15516

OR

☐ Practitioner(s) named below (if more than ten patent practitioners are to be named, then a customer number must be used):

Name	Registration Number	Name	Registration Number

as attorney(s) or agent(s) to represent the undersigned before the United States Patent and Trademark Office (USPTO) in connection with any and all patent applications assigned only to the undersigned according to the USPTO assignment records or assignment documents attached to this form in accordance with 37 CFR 3.73(b).

Please change the correspondence address for the application identified in the attached statement under 37 CFR 3.73(b) to:

☑ The address associated with Customer Number: 15516

OR

☐ Firm or Individual Name			
Address			
City		State	Zip
Country			
Telephone		Email	

Assignee Name and Address:

AlphCom, Inc.
99 Rhode Island Street, 3rd Floor
San Francisco, California 94103

A copy of this form, together with a statement under 37 CFR 3.73(b) (Form PTO/SB/96 or equivalent) is required to be filed in each application in which this form is used. The statement under 37 CFR 3.73(b) may be completed by one of the practitioners appointed in this form if the appointed practitioner is authorized to act on behalf of the assignee, and must identify the application in which this Power of Attorney is to be filed.

SIGNATURE of Assignee of Record
The individual whose signature and title is supplied below is authorized to act on behalf of the assignee

Signature		Date	12-2-2014
Name	Michael Edward Smith Luna	Telephone	(877) 254-7426
Title	Chief Technology Officer, AlphCom, Inc.		

This collection of information is required by 37 CFR 1.31, 1.32 and 1.33. The information is required to obtain or retain a benefit by the public which is to file (and by the USPTO to process) an application. Confidentiality is governed by 35 U.S.C. 122 and 37 CFR 1.11 and 1.14. This collection is estimated to take 3 minutes to complete, including gathering, preparing, and submitting the completed application form to the USPTO. Time will vary depending upon the individual case. Any comments on the amount of time you require to complete this form and/or suggestions for reducing this burden, should be sent to the Chief Information Officer, U.S. Patent and Trademark Office, U.S. Department of Commerce, P.O. Box 1450, Alexandria, VA 22313-1450. DO NOT SEND FEES OR COMPLETED FORMS TO THIS ADDRESS. SEND TO: Commissioner for Patents, P.O. Box 1450, Alexandria, VA 22313-1450.

If you need assistance in completing the form, call 1-800-PTO-9199 and select option 2.

PTO/SB/96 (07-09)
Approved for use through 07/31/2012. OMB 0651-0031
U.S. Patent and Trademark Office; U.S. DEPARTMENT OF COMMERCE
Under the Paperwork Reduction Act of 1995, no persons are required to respond to a collection of information unless it displays a valid OMB control number.

STATEMENT UNDER 37 CFR 3.73(b)

Applicant/Patent Owner: Nicolas Petit; Gregory Burnett; Zhinian Jing

Application No./Patent No.: 12/606,140 Filed/Issue Date: October 26, 2009

Titled: ACOUSTIC VOICE ACTIVITY DETECTION (AVAD) FOR ELECTRONIC SYSTEM

AliphCom, Inc., a corporation
(Name of Assignee) (Type of Assignee, e.g., corporation, partnership, university, government agency, etc.

states that it is:

1. [X] the assignee of the entire right, title, and interest in;

2. [ ] an assignee of less than the entire right, title, and interest in (The extent (by percentage) of its ownership interest is _____ %); or

3. [ ] the assignee of an undivided interest in the entirety of (a complete assignment from one of the joint inventors was made)

the patent application/patent identified above, by virtue of either:

A. [X] An assignment from the inventor(s) of the patent application/patent identified above. The assignment was recorded in the United States Patent and Trademark Office at Reel 023878, Frame 0030, or for which a copy therefore is attached.

OR

B. [ ] A chain of title from the inventor(s), of the patent application/patent identified above, to the current assignee as follows:

1. From: _____ To: _____
The document was recorded in the United States Patent and Trademark Office at
Reel _____, Frame _____, or for which a copy thereof is attached.

2. From: _____ To: _____
The document was recorded in the United States Patent and Trademark Office at
Reel _____, Frame _____, or for which a copy thereof is attached.

3. From: _____ To: _____
The document was recorded in the United States Patent and Trademark Office at
Reel _____, Frame _____, or for which a copy thereof is attached.

[ ] Additional documents in the chain of title are listed on a supplemental sheet(s).

[X] As required by 37 CFR 3.73(b)(1)(i), the documentary evidence of the chain of title from the original owner to the assignee was, or concurrently is being, submitted for recordation pursuant to 37 CFR 3.11.

[NOTE: A separate copy (*i.e.*, a true copy of the original assignment document(s)) must be submitted to Assignment Division in accordance with 37 CFR Part 3, to record the assignment in the records of the USPTO. See MPEP 302.08]

The undersigned (whose title is supplied below) is authorized to act on behalf of the assignee.

Signature — Date: December 2, 2011

Scott S. Kokka — Attorney of Record
Printed or Typed Name — Title

This collection of information is required by 37 CFR 3.73(b). The information is required to obtain or retain a benefit by the public which is to file (and by the USPTO to process) an application. Confidentiality is governed by 35 U.S.C. 122 and 37 CFR 1.11 and 1.14. This collection is estimated to take 12 minutes to complete, including gathering, preparing, and submitting the completed application form to the USPTO. Time will vary depending upon the individual case. Any comments on the amount of time you require to complete this form and/or suggestions for reducing this burden, should be sent to the Chief Information Officer, U.S. Patent and Trademark Office, U.S. Department of Commerce, P.O. Box 1450, Alexandria, VA 22313-1450. DO NOT SEND FEES OR COMPLETED FORMS TO THIS ADDRESS. **SEND TO: Commissioner for Patents, P.O. Box 1450, Alexandria, VA 22313-1450.**

If you need assistance in completing the form, call 1-800-PTO-9199 and select option 2.

Electronic Acknowledgement Receipt

EFS ID:	11537211
Application Number:	12606140
International Application Number:	
Confirmation Number:	2189
Title of Invention:	Acoustic Voice Activity Detection (AVAD) for Electronic Systems
First Named Inventor/Applicant Name:	Nicolas Petit
Customer Number:	98195
Filer:	Scott Susumu Kokka
Filer Authorized By:	
Attorney Docket Number:	ALPH.P039
Receipt Date:	02-DEC-2011
Filing Date:	26-OCT-2009
Time Stamp:	21:19:28
Application Type:	Utility under 35 USC 111(a)

Payment information:

Submitted with Payment	no

File Listing:

Document Number	Document Description	File Name	File Size(Bytes)/ Message Digest	Multi Part /.zip	Pages (if appl.)
1		ALI-055CON1CIP2_GPOA_and_stmt_37CFR373b_asfiled.pdf	387534 [illegible]	yes	2

	Multipart Description/PDF files in .zip description		
	Document Description	**Start**	**End**
	Power of Attorney	1	1
	Assignee showing of ownership per 37 CFR 3.73(b).	2	2
Warnings:			
Information:			
	Total Files Size (in bytes):	387534	

This Acknowledgement Receipt evidences receipt on the noted date by the USPTO of the indicated documents, characterized by the applicant, and including page counts, where applicable. It serves as evidence of receipt similar to a Post Card, as described in MPEP 503.

New Applications Under 35 U.S.C. 111
If a new application is being filed and the application includes the necessary components for a filing date (see 37 CFR 1.53(b)-(d) and MPEP 506), a Filing Receipt (37 CFR 1.54) will be issued in due course and the date shown on this Acknowledgement Receipt will establish the filing date of the application.

National Stage of an International Application under 35 U.S.C. 371
If a timely submission to enter the national stage of an international application is compliant with the conditions of 35 U.S.C. 371 and other applicable requirements a Form PCT/DO/EO/903 indicating acceptance of the application as a national stage submission under 35 U.S.C. 371 will be issued in addition to the Filing Receipt, in due course.

New International Application Filed with the USPTO as a Receiving Office
If a new international application is being filed and the international application includes the necessary components for an international filing date (see PCT Article 11 and MPEP 1810), a Notification of the International Application Number and of the International Filing Date (Form PCT/RO/105) will be issued in due course, subject to prescriptions concerning national security, and the date shown on this Acknowledgement Receipt will establish the international filing date of the application.

UNITED STATES PATENT AND TRADEMARK OFFICE

UNITED STATES DEPARTMENT OF COMMERCE
United States Patent and Trademark Office
Address: COMMISSIONER FOR PATENTS
P.O. Box 1450
Alexandria, Virginia 22313-1450
www.uspto.gov

APPLICATION NUMBER	FILING OR 371(C) DATE	FIRST NAMED APPLICANT	ATTY. DOCKET NO./TITLE
12/606,140	10/26/2009	Nicolas Petit	ALPH.P039

CONFIRMATION NO. 2189

POA ACCEPTANCE LETTER

15516
Kokka & Backus, PC
703 Hight Street
Palo Alto, CA 94301

OC000000051332799

Date Mailed: 12/12/2011

NOTICE OF ACCEPTANCE OF POWER OF ATTORNEY

This is in response to the Power of Attorney filed 11/30/2011.

The Power of Attorney in this application is accepted. Correspondence in this application will be mailed to the above address as provided by 37 CFR 1.33.

/atesfai/

Office of Data Management, Application Assistance Unit (571) 272-4000, or (571) 272-4200, or 1-888-786-0101

UNITED STATES PATENT AND TRADEMARK OFFICE

UNITED STATES DEPARTMENT OF COMMERCE
United States Patent and Trademark Office
Address: COMMISSIONER FOR PATENTS
P.O. Box 1450
Alexandria, Virginia 22313-1450
www.uspto.gov

APPLICATION NUMBER	FILING OR 371(C) DATE	FIRST NAMED APPLICANT	ATTY. DOCKET NO./TITLE
12/606,140	10/26/2009	Nicolas Petit	ALPH.P039

CONFIRMATION NO. 2189

POWER OF ATTORNEY NOTICE

98195
Gregory & Sawrie LLP
2018 Bissonnet Street
Houston, TX 77005

OC000000051332769

Date Mailed: 12/12/2011

NOTICE REGARDING CHANGE OF POWER OF ATTORNEY

This is in response to the Power of Attorney filed 11/30/2011.

- The Power of Attorney to you in this application has been revoked by the assignee who has intervened as provided by 37 CFR 3.71. Future correspondence will be mailed to the new address of record(37 CFR 1.33).

/atesfai/

Office of Data Management, Application Assistance Unit (571) 272-4000, or (571) 272-4200, or 1-888-786-0101

UNITED STATES PATENT AND TRADEMARK OFFICE

UNITED STATES DEPARTMENT OF COMMERCE
United States Patent and Trademark Office
Address: COMMISSIONER FOR PATENTS
P.O. Box 1450
Alexandria, Virginia 22313-1450
www.uspto.gov

APPLICATION NO.	FILING DATE	FIRST NAMED INVENTOR	ATTORNEY DOCKET NO.	CONFIRMATION NO.
12/606,140	10/26/2009	Nicolas Petit	ALI-055CON1CIP2	2189

15516 7590 05/16/2012
Kokka & Backus, PC
703 High Street
Palo Alto, CA 94301

EXAMINER
AZAD, ABUL K

ART UNIT	PAPER NUMBER
2626	

MAIL DATE	DELIVERY MODE
05/16/2012	PAPER

Please find below and/or attached an Office communication concerning this application or proceeding.

The time period for reply, if any, is set in the attached communication.

PTOL-90A (Rev. 04/07)

Office Action Summary	Application No.	Applicant(s)
	12/606,140	PETIT ET AL.
	Examiner	Art Unit
	ABUL AZAD	2626

-- The MAILING DATE of this communication appears on the cover sheet with the correspondence address --

Period for Reply

A SHORTENED STATUTORY PERIOD FOR REPLY IS SET TO EXPIRE 3 MONTH(S) OR THIRTY (30) DAYS, WHICHEVER IS LONGER, FROM THE MAILING DATE OF THIS COMMUNICATION.

- Extensions of time may be available under the provisions of 37 CFR 1.136(a). In no event, however, may a reply be timely filed after SIX (6) MONTHS from the mailing date of this communication.
- If NO period for reply is specified above, the maximum statutory period will apply and will expire SIX (6) MONTHS from the mailing date of this communication.
- Failure to reply within the set or extended period for reply will, by statute, cause the application to become ABANDONED (35 U.S.C. § 133). Any reply received by the Office later than three months after the mailing date of this communication, even if timely filed, may reduce any earned patent term adjustment. See 37 CFR 1.704(b).

Status

1)☒ Responsive to communication(s) filed on *26 October 2009*.

2a)☐ This action is **FINAL**. 2b)☒ This action is non-final.

3)☐ An election was made by the applicant in response to a restriction requirement set forth during the interview on _____; the restriction requirement and election have been incorporated into this action.

4)☐ Since this application is in condition for allowance except for formal matters, prosecution as to the merits is closed in accordance with the practice under *Ex parte Quayle*, 1935 C.D. 11, 453 O.G. 213.

Disposition of Claims

5)☒ Claim(s) *1-44* is/are pending in the application.

5a) Of the above claim(s) _____ is/are withdrawn from consideration.

6)☐ Claim(s) _____ is/are allowed.

7)☒ Claim(s) *1-44* is/are rejected.

8)☐ Claim(s) _____ is/are objected to.

9)☐ Claim(s) _____ are subject to restriction and/or election requirement.

Application Papers

10)☐ The specification is objected to by the Examiner.

11)☒ The drawing(s) filed on *26 October 2009* is/are: a)☒ accepted or b)☐ objected to by the Examiner.

Applicant may not request that any objection to the drawing(s) be held in abeyance. See 37 CFR 1.85(a).

Replacement drawing sheet(s) including the correction is required if the drawing(s) is objected to. See 37 CFR 1.121(d).

12)☐ The oath or declaration is objected to by the Examiner. Note the attached Office Action or form PTO-152.

Priority under 35 U.S.C. § 119

13)☐ Acknowledgment is made of a claim for foreign priority under 35 U.S.C. § 119(a)-(d) or (f).

a)☐ All b)☐ Some * c)☐ None of:

1.☐ Certified copies of the priority documents have been received.

2.☐ Certified copies of the priority documents have been received in Application No. _____.

3.☐ Copies of the certified copies of the priority documents have been received in this National Stage application from the International Bureau (PCT Rule 17.2(a)).

* See the attached detailed Office action for a list of the certified copies not received.

Attachment(s)

1) ☒ Notice of References Cited (PTO-892)
2) ☐ Notice of Draftsperson's Patent Drawing Review (PTO-948)
3) ☐ Information Disclosure Statement(s) (PTO/SB/08) Paper No(s)/Mail Date _____.
4) ☐ Interview Summary (PTO-413) Paper No(s)/Mail Date. _____.
5) ☐ Notice of Informal Patent Application
6) ☐ Other: _____.

DETAILED ACTION

1. This action is in response to the communication filed on October 26, 2009.

2. Claims 1-44 are pending in this action.

Double Patenting

3. The nonstatutory double patenting rejection is based on a judicially created doctrine grounded in public policy (a policy reflected in the statute) so as to prevent the unjustified or improper timewise extension of the "right to exclude" granted by a patent and to prevent possible harassment by multiple assignees. A nonstatutory obviousness-type double patenting rejection is appropriate where the conflicting claims are not identical, but at least one examined application claim is not patentably distinct from the reference claim(s) because the examined application claim is either anticipated by, or would have been obvious over, the reference claim(s). See, e.g., *In re Berg*, 140 F.3d 1428, 46 USPQ2d 1226 (Fed. Cir. 1998); *In re Goodman*, 11 F.3d 1046, 29 USPQ2d 2010 (Fed. Cir. 1993); *In re Longi*, 759 F.2d 887, 225 USPQ 645 (Fed. Cir. 1985); *In re Van Ornum*, 686 F.2d 937, 214 USPQ 761 (CCPA 1982); *In re Vogel*, 422 F.2d 438, 164 USPQ 619 (CCPA 1970); and *In re Thorington*, 418 F.2d 528, 163 USPQ 644 (CCPA 1969).

A timely filed terminal disclaimer in compliance with 37 CFR 1.321(c) or 1.321(d) may be used to overcome an actual or provisional rejection based on a nonstatutory double patenting ground provided the conflicting application or patent either is shown to

be commonly owned with this application, or claims an invention made as a result of activities undertaken within the scope of a joint research agreement.

Effective January 1, 1994, a registered attorney or agent of record may sign a terminal disclaimer. A terminal disclaimer signed by the assignee must fully comply with 37 CFR 3.73(b).

4. Claims 1-44 are provisionally rejected on the ground of nonstatutory obviousness-type double patenting as being unpatentable over claims 1-42 of copending Application No. 12/606,146. Although the conflicting claims are not identical, they are not patentably distinct from each other because it would have been obvious to one of ordinary skill in the art to claim a system/an apparatus of a method claim of instant application.

This is a provisional obviousness-type double patenting rejection because the conflicting claims have not in fact been patented.

Contact Information

Any inquiry concerning this communication or earlier communications from the examiner should be directed to **Abul K. Azad** whose telephone number is **(571) 272-7599.** If attempts to reach the examiner by telephone are unsuccessful, the examiner's supervisor, **David Hudspeth**, can be reached at **(571) 272-7843.**

Any response to this action should be mailed to:

Commissioner for Patents

P.O. Box 1450

Alexandria, VA 22313-1450

Or faxed to: **(571) 273-8300.**

Hand-delivered responses should be brought to **401 Dulany Street, Alexandria, VA-22314** (Customer Service Window).

Information regarding the status of an application may be obtained from the Patent Application Information Retrieval (PAIR) system. Status information for published applications may be obtained from either Private PAIR or Public PAIR. Status information for unpublished applications is available through Private PAIR only. For more information about the PAIR system, see http://pair-direct.uspto.gov. Should you have questions on access to the Private PAIR system, contact the Electronic Business Center (EBC) at 866-217-9197 (toll-free).

May 15, 2012

Abul K. Azad
Primary Examiner
Art Unit 2626

/ABUL AZAD/
Primary Examiner, Art Unit 2626

Notice of References Cited	Application/Control No. 12/606,140	Applicant(s)/Patent Under Reexamination PETIT ET AL.	
	Examiner ABUL AZAD	Art Unit 2626	Page 1 of 1

U.S. PATENT DOCUMENTS

*		Document Number Country Code-Number-Kind Code	Date MM-YYYY	Name	Classification
*	A	US-7,171,357	01-2007	Boland, Simon Daniel	704/231
*	B	US-2009/0089053	04-2009	Wang et al.	704/233
*	C	US-7,246,058	07-2007	Burnett, Gregory C.	704/226
*	D	US-8,019,091	09-2011	Burnett et al.	381/71.8
*	E	US-7,464,029	12-2008	Visser et al.	704/210
*	F	US-5,459,814	10-1995	Gupta et al.	704/233
	G	US-			
	H	US-			
	I	US-			
	J	US-			
	K	US-			
	L	US-			
	M	US-			

FOREIGN PATENT DOCUMENTS

*		Document Number Country Code-Number-Kind Code	Date MM-YYYY	Country	Name	Classification
	N					
	O					
	P					
	Q					
	R					
	S					
	T					

NON-PATENT DOCUMENTS

*		Include as applicable: Author, Title Date, Publisher, Edition or Volume, Pertinent Pages)
	U	
	V	
	W	
	X	

*A copy of this reference is not being furnished with this Office action. (See MPEP § 707.05(a).)
Dates in MM-YYYY format are publication dates. Classifications may be US or foreign.

Index of Claims	Application/Control No.	Applicant(s)/Patent Under Reexamination
	12606140	PETIT ET AL.
	Examiner	**Art Unit**
	ABUL AZAD	2626

✓	Rejected	-	Cancelled	N	Non-Elected	A	Appeal
=	Allowed	÷	Restricted	I	Interference	O	Objected

☐ Claims renumbered in the same order as presented by applicant ☐ CPA ☐ T.D. ☐ R.1.47

CLAIM		DATE								
Final	Original	05/14/2012								
	1	✓								
	2	✓								
	3	✓								
	4	✓								
	5	✓								
	6	✓								
	7	✓								
	8	✓								
	9	✓								
	10	✓								
	11	✓								
	12	✓								
	13	✓								
	14	✓								
	15	✓								
	16	✓								
	17	✓								
	18	✓								
	19	✓								
	20	✓								
	21	✓								
	22	✓								
	23	✓								
	24	✓								
	25	✓								
	26	✓								
	27	✓								
	28	✓								
	29	✓								
	30	✓								
	31	✓								
	32	✓								
	33	✓								
	34	✓								
	35	✓								
	36	✓								

Index of Claims	Application/Control No.	Applicant(s)/Patent Under Reexamination
	12606140	PETIT ET AL.
	Examiner	**Art Unit**
	ABUL AZAD	2626

✓	Rejected	-	Cancelled	N	Non-Elected	A	Appeal
=	Allowed	÷	Restricted	I	Interference	O	Objected

☐ Claims renumbered in the same order as presented by applicant ☐ CPA ☐ T.D. ☐ R.1.47

CLAIM		DATE								
Final	Original	05/14/2012								
	37	✓								
	38	✓								
	39	✓								
	40	✓								
	41	✓								
	42	✓								
	43	✓								
	44	✓								

UNITED STATES PATENT AND TRADEMARK OFFICE

UNITED STATES DEPARTMENT OF COMMERCE
United States Patent and Trademark Office
Address: COMMISSIONER FOR PATENTS
P.O. Box 1450
Alexandria, Virginia 22313-1450
www.uspto.gov

BIB DATA SHEET

CONFIRMATION NO. 2189

SERIAL NUMBER	FILING or 371(c) DATE	CLASS	GROUP ART UNIT	ATTORNEY DOCKET NO.
12/606,140	10/26/2009 RULE	704	2626	ALI-055CON1CIP2

APPLICANTS

Nicolas Petit, San Francisco, CA;
Gregory Burnett, Dodge Center, MN;
Zhinian Jing, San Francisco, CA;

**** CONTINUING DATA ****************************

This appln claims benefit of 61/108,426 10/24/2008
and is a CIP of 11/805,987 05/25/2007 ABN
and is a CIP of 12/139,333 06/13/2008

**** FOREIGN APPLICATIONS ****************************

**** IF REQUIRED, FOREIGN FILING LICENSE GRANTED ****

11/09/2009

Foreign Priority claimed	☐ Yes ☑ No	☐ Met after Allowance	STATE OR COUNTRY	SHEETS DRAWINGS	TOTAL CLAIMS	INDEPENDENT CLAIMS
35 USC 119(a-d) conditions met	☐ Yes ☐ No		CA	35	44	3
Verified and Acknowledged	/ABUL K AZAD/ Examiner's Signature	Initials				

ADDRESS

Kokka & Backus, PC
703 High Street
Palo Alto, CA 94301
UNITED STATES

TITLE

Acoustic Voice Activity Detection (AVAD) for Electronic Systems

FILING FEE RECEIVED		
2468	FEES: Authority has been given in Paper No._____ to charge/credit DEPOSIT ACCOUNT No._____ for following:	☐ All Fees ☐ 1.16 Fees (Filing) ☐ 1.17 Fees (Processing Ext. of time) ☐ 1.18 Fees (Issue) ☐ Other _____ ☐ Credit

DIB (Rev. 05/07)

Search Notes	Application/Control No.	Applicant(s)/Patent Under Reexamination
	12606140	PETIT ET AL.
	Examiner	**Art Unit**
	ABUL AZAD	2626

SEARCHED

Class	Subclass	Date	Examiner
704	208, 210, 214, 215	05/14/2012	/AA/
381	99, 100, 46	05/14/2012	/AA/

SEARCH NOTES

Search Notes	Date	Examiner
EAST searched see attached	05/10/2012	/AA/

INTERFERENCE SEARCH

Class	Subclass	Date	Examiner

EAST Search History

EAST Search History (Prior Art)

Ref #	Hits	Search Query	DBs	Default Operator	Plurals	Time Stamp
S2	220	virtual microphone	US-PGPUB; USPAT; USOCR; FPRS; EPO; JPO; DERWENT; IBM_TDB	ADJ	ON	2012/05/10 16:50
S3	3522	(first adj2 microphone) and (second adj2 microphone)	US-PGPUB; USPAT; USOCR; FPRS; EPO; JPO; DERWENT; IBM_TDB	ADJ	ON	2012/05/10 16:51
S4	36	S2 and S3	US-PGPUB; USPAT; USOCR; FPRS; EPO; JPO; DERWENT; IBM_TDB	ADJ	ON	2012/05/10 16:51
S5	31	S4 and filter	US-PGPUB; USPAT; USOCR; FPRS; EPO; JPO; DERWENT; IBM_TDB	ADJ	ON	2012/05/10 16:52
S6	4898	voice activity	US-PGPUB; USPAT; USOCR; FPRS; EPO; JPO; DERWENT; IBM_TDB	ADJ	ON	2012/05/10 16:56

S7	35	S2 and S6	US-PGPUB; USPAT; USOCR; FPRS; EPO; JPO; DERWENT; IBM_TDB	ADJ	ON	2012/05/10 16:56
S8	19	S7 and S3	US-PGPUB; USPAT; USOCR; FPRS; EPO; JPO; DERWENT; IBM_TDB	ADJ	ON	2012/05/10 16:57
S9	7	S8 and threshold	US-PGPUB; USPAT; USOCR; FPRS; EPO; JPO; DERWENT; IBM_TDB	ADJ	ON	2012/05/10 16:58
S10	7	S9 and energy	US-PGPUB; USPAT; USOCR; FPRS; EPO; JPO; DERWENT; IBM_TDB	ADJ	ON	2012/05/10 16:58
S11	3522	(first adj2 microphone) and (second adj2 microphone)	US-PGPUB; USPAT; USOCR; FPRS; EPO; JPO; DERWENT; IBM_TDB	ADJ	ON	2012/05/10 17:41
S12	1673	S11 and filter	US-PGPUB; USPAT; USOCR; FPRS; EPO; JPO; DERWENT; IBM_TDB	ADJ	ON	2012/05/10 17:41
S13	705	S12 and threshold	US-	ADJ	ON	2012/05/10

			PGPUB; USPAT; USOCR; FPRS; EPO; JPO; DERWENT; IBM_TDB			17:42
S14	23	S13 and (energy ratio)	US-PGPUB; USPAT; USOCR; FPRS; EPO; JPO; DERWENT; IBM_TDB	ADJ	ON	2012/05/10 17:42
S15	6	S14 and virtual	US-PGPUB; USPAT; USOCR; FPRS; EPO; JPO; DERWENT; IBM_TDB	ADJ	ON	2012/05/10 17:45
S16	1023	704/208,210,214,215.ccls.	US-PGPUB; USPAT; USOCR; FPRS; EPO; JPO; DERWENT; IBM_TDB	ADJ	ON	2012/05/14 10:17
S17	1	S16 and (virtual microphone)	US-PGPUB; USPAT; USOCR; FPRS; EPO; JPO; DERWENT; IBM_TDB	ADJ	ON	2012/05/14 10:18
S18	380	S16 and microphone	US-PGPUB; USPAT; USOCR; FPRS; EPO; JPO; DERWENT; IBM_TDB	ADJ	ON	2012/05/14 10:19
S19	104	S18 and (voice activity)	US-PGPUB;	ADJ	ON	2012/05/14 10:19

			USPAT; USOCR; FPRS; EPO; JPO; DERWENT; IBM_TDB			
S20	89	S19 and threshold	US-PGPUB; USPAT; USOCR; FPRS; EPO; JPO; DERWENT; IBM_TDB	ADJ	ON	2012/05/14 10:20
S21	6	S20 and (energy ratio)	US-PGPUB; USPAT; USOCR; FPRS; EPO; JPO; DERWENT; IBM_TDB	ADJ	ON	2012/05/14 10:20
S22	405	381/99,100,46.ccls.	US-PGPUB; USPAT; USOCR; FPRS; EPO; JPO; DERWENT; IBM_TDB	ADJ	ON	2012/05/14 10:23
S23	0	S22 and (voice activity)	US-PGPUB; USPAT; USOCR; FPRS; EPO; JPO; DERWENT; IBM_TDB	ADJ	ON	2012/05/14 10:23
S24	44	S22 and threshold	US-PGPUB; USPAT; USOCR; FPRS; EPO; JPO; DERWENT; IBM_TDB	ADJ	ON	2012/05/14 10:24
S25	0	S24 and (energy ratio)	US-PGPUB; USPAT;	ADJ	ON	2012/05/14 10:24

			USOCR; FPRS; EPO; JPO; DERWENT; IBM_TDB			
S26	1023	704/208,210,214,215.ccls.	US-PGPUB; USPAT; USOCR; FPRS; EPO; JPO; DERWENT; IBM_TDB	ADJ	ON	2012/05/14 14:19
S27	380	S26 and microphone	US-PGPUB; USPAT; USOCR; FPRS; EPO; JPO; DERWENT; IBM_TDB	ADJ	ON	2012/05/14 14:19
S28	104	S27 and (voice activity)	US-PGPUB; USPAT; USOCR; FPRS; EPO; JPO; DERWENT; IBM_TDB	ADJ	ON	2012/05/14 14:19
S29	89	S28 and threshold	US-PGPUB; USPAT; USOCR; FPRS; EPO; JPO; DERWENT; IBM_TDB	ADJ	ON	2012/05/14 14:19

5/14/2012 5:20:21 PM
C:\Users\aazad\Documents\EAST\Workspaces\12606146.wsp

IN THE UNITED STATES PATENT AND TRADEMARK OFFICE

In re the Application of:
Petit et al.

Application Serial No.: 12/606,140

Filing Date: October 26, 2009

For: ACOUSTIC VOICE ACTIVITY DETECTION (AVAD) FOR ELECTRONIC SYSTEMS

Examiner: AZAD, Abul K.

Group Art Unit: 2626

Date: June 29, 2012

Atty. Docket No.: ALI-055CON1CIP2

CERTIFICATE OF TRANSMISSION

I hereby certify that this correspondence is being transmitted via the U.S. Patent and Trademark Office electronic filing system (EFS-Web) to the USPTO on June 29, 2012.
Signed: _____
Kate M. Cleland

AMENDMENT A

Dear Sir or Madam:

Please find enclosed a complete claim listing, remarks, and a Terminal Disclaimer submitted herewith in response to the Non-Final Office Action mailed May 16, 2012.

CLAIM LISTING

No amendments were made to the claims below.

1. (Original) A method comprising:

forming a first virtual microphone by combining a first signal of a first physical microphone and a second signal of a second physical microphone;

forming a filter that describes a relationship for speech between the first physical microphone and the second physical microphone;

forming a second virtual microphone by applying the filter to the first signal to generate a first intermediate signal, and summing the first intermediate signal and the second signal;

generating an energy ratio of energies of the first virtual microphone and the second virtual microphone; and

detecting acoustic voice activity of a speaker when the energy ratio is greater than a threshold value.

2. (Original) The method of claim 1, wherein the first virtual microphone and the second virtual microphone are distinct virtual directional microphones.

3. (Original) The method of claim 2, wherein the first virtual microphone and the second virtual microphone have approximately similar responses to noise.

4. (Original) The method of claim 3, wherein the first virtual microphone and the second virtual microphone have approximately dissimilar responses to speech.

5. (Original) The method of claim 1, comprising applying a calibration to at least one of the first signal and the second signal.

6. (Original) The method of claim 5, wherein the calibration compensates a second response of the second physical microphone so that the second response is equivalent to a first response of the first physical microphone.

7. (Original) The method of claim 5, comprising applying a delay to the first intermediate signal.

8. (Original) The method of claim 7, wherein the delay is proportional to a time difference between arrival of the speech at the second physical microphone and arrival of the speech at the first physical microphone.

9. (Original) The method of claim 8, wherein the forming of the first virtual microphone comprises applying the filter to the second signal.

10. (Original) The method of claim 9, wherein the forming of the first virtual microphone comprises applying the calibration to the second signal.

11. (Original) The method of claim 10, wherein the forming of the first virtual microphone comprises applying the delay to the first signal.

12. (Original) The method of claim 11, wherein the forming of the first virtual microphone by the combining comprises subtracting the second signal from the first signal.

13. (Original) The method of claim 12, wherein the filter is an adaptive filter.

14. (Original) The method of claim 13, comprising adapting the filter to minimize a second virtual microphone output when only speech is being received by the first physical microphone and the second physical microphone.

15. (Original) The method of claim 13, wherein the adapting comprises applying a least-mean squares process.

16. (Original) The method of claim 13, comprising generating coefficients of the filter during a period when only speech is being received by the first physical microphone and the second physical microphone.

17. (Original) The method of claim 13, wherein the forming of the filter comprises:

generating a first quantity by applying a calibration to the second signal;

generating a second quantity by applying the delay to the first signal;

forming the filter as a ratio of the first quantity to the second quantity.

18. (Original) The method of claim 17, wherein the generating of the energy ratio comprises generating the energy ratio for a frequency band.

19. (Original) The method of claim 17, wherein the generating of the energy ratio comprises generating the energy ratio for a frequency subband.

20. (Original) The method of claim 19, wherein the frequency subband includes frequencies higher than approximately 200 Hertz (Hz).

21. (Original) The method of claim 19, wherein the frequency subband includes frequencies in a range from approximately 250 Hz to 1250 Hz.

22. (Original) The method of claim 19, wherein the frequency subband includes frequencies in a range from approximately 200 Hz to 3000 Hz.

23. (Original) The method of claim 12, wherein the filter is a static filter.

24. (Original) The method of claim 23, wherein the forming of the filter comprises:

determining a first distance as distance between the first physical microphone and a mouth of the speaker;

determining a second distance as distance between the second physical microphone and the mouth; and

forming a ratio of the first distance to the second distance.

25. (Original) The method of claim 1, comprising generating a vector of the energy ratio versus time.

26. (Original) The method of claim 1, wherein the first and second physical microphones are omnidirectional microphones.

27. (Original) The method of claim 1, comprising positioning the first physical microphone and the second physical microphone along an axis and separating the first physical microphone and the second physical microphone by a first distance.

28. (Original) The method of claim 27, wherein a midpoint of the axis is a second distance from a mouth of the speaker, wherein the mouth is located in a direction defined by an angle relative to the midpoint.

29. (Original) A method comprising:

forming a first virtual microphone;

forming a filter by generating a first quantity by applying a calibration to a second signal of a second physical microphone, generating a second quantity by applying the delay to a first signal of a first physical microphone, and forming the filter as a ratio of the first quantity to the second quantity;

forming a second virtual microphone by applying the filter to the first signal to generate a first intermediate signal, and summing the first intermediate signal and the second signal; and

generating a ratio of energies of the first virtual microphone and the second virtual microphone and detecting acoustic voice activity using the ratio.

30. (Original) The method of claim 29, wherein the first virtual microphone and the second virtual microphone have approximately similar responses to noise and approximately dissimilar responses to speech.

31. (Original) The method of claim 29, comprising applying a calibration to at least one of the first signal and the second signal, wherein the calibration compensates a second response of the second physical microphone so that the second response is equivalent to a first response of the first physical microphone.

32 (Original) The method of claim 29, comprising applying a delay to the first intermediate signal, wherein the delay is proportional to a time difference between arrival of the speech at the second physical microphone and arrival of the speech at the first physical microphone.

33. (Original) The method of claim 29, wherein the forming of the first virtual microphone comprises applying the filter to the second signal.

34. (Original) The method of claim 33, wherein the forming of the first virtual microphone comprises applying the calibration to the second signal.

35. (Original) The method of claim 34, wherein the forming of the first virtual microphone comprises applying the delay to the first signal.

36. (Original) The method of claim 35, wherein the forming of the first virtual microphone by the combining comprises subtracting the second signal from the first signal.

37. (Original) The method of claim 29, wherein the filter is an adaptive filter.

38. (Original) The method of claim 29, comprising adapting the filter to minimize a second virtual microphone output when only speech is being received by the first physical microphone and the second physical microphone.

39. (Original) The method of claim 37, wherein the adapting comprises applying a least-mean squares process.

40. (Original) The method of claim 37, comprising generating coefficients of the filter during a period when only speech is being received by the first physical microphone and the second physical microphone.

41. (Original) The method of claim 29, wherein the generating of the ratio comprises generating the ratio for a frequency band.

42. (Original) The method of claim 29, wherein the generating of the ratio comprises generating the ratio for a frequency subband.

43. (Original) The method of claim 29, comprising generating a vector of the ratio versus time.

44. (Original) A method comprising:

forming a first virtual microphone by generating a first combination of a first signal and a second signal, wherein the first signal is received from a first physical microphone and the second signal is received from a second physical microphone;

forming a filter by generating a first quantity by applying a calibration to at least one of the first signal and the second signal, generating a second quantity by applying a delay to the first signal, and forming the filter as a ratio of the first quantity to the second quantity; and

forming a second virtual microphone by applying the filter to the first signal to generate a first intermediate signal and summing the first intermediate signal and the second signal; and

determining a presence of acoustic voice activity of a speaker when an energy ratio of energies of the first virtual microphone and the second virtual microphone is greater than a threshold value.

REMARKS

Claims 1-44 remain pending.

The Examiner has rejected claims 1-44 under a provisional, nonstatutory, obviousness-type double patenting rejection in view of claims 1-42 of U.S. Patent Application No. 12/606,146 (the '146 patent application).

The rejections are respectfully traversed. Submitted herewith is a Terminal Disclaimer and accompanying fee in response to the provisional, nonstatutory, obviousness-type double patenting rejection in view of the '146 patent application. Thus, Applicants submit that claims 1-44 are allowable.

Reconsideration of the application and allowance of all claims are respectfully requested based on the preceding remarks. If at any time the Examiner believes that an interview would be helpful, please contact the undersigned.

Respectfully submitted,

Howard J. Yuan
Reg. No. 67,985

KOKKA & BACKUS, PC
703 High Street
Palo Alto, CA 94301-2447
Tel: (650) 566-9912
Fax: (650) 566-9922

IN THE UNITED STATES PATENT AND TRADEMARK OFFICE

In re Application of: Petit et al.	Confirmation No.: 2189
Application No.: 12/606,140	Examiner: AZAD, Abul K.
Filed: October 26, 2009	Group Art Unit: 2626
For: ACOUSTIC VOICE ACTIVITY DETECTION (AVAD) FOR ELECTRONIC SYSTEMS	Date: June 29, 2012
	Atty. Docket No.: ALI-055CON1CIP2

CERTIFICATE OF MAILING

I hereby certify that this correspondence is being transmitted via the U.S. Patent and Trademark Office electronic filing system (EFS-Web) to the USPTO on June 29, 2012.

Signed: K. Cleland
Kate M. Cleland

TERMINAL DISCLAIMER UNDER 37 C.F.R. § 1.321 TO OBVIATE A PROVISIONAL OBVIOUSNESS-TYPE DOUBLE PATENTING REJECTION

Commissioner for Patents
PO Box 1450
Alexandria, VA 22313-1450

Dear Sir or Madam:

The owner(s), AliphCom, Inc. (Assignee), of the entire interest in the above-identified application hereby disclaims, except as provided below, the terminal part of the statutory term of any patent granted on the above-identified application (hereafter "instant application"), which would extend beyond the expiration date of the full statutory term defined in 35 U.S.C. 154 and 173 of any patent granted on pending reference Application Number 12/606,146, filed on October 26, 2009 (hereafter "reference patent application"), as the term of any patent granted on said reference patent application may be shortened by any terminal disclaimer filed prior to the grant of any patent on the reference patent application. The owner(s) hereby agrees that any patent so granted on the instant application shall be enforceable only for and during such period that it and any patent granted on the reference

patent application are commonly owned. This agreement runs with any patent granted on the instant application and is binding upon the grantee, its successors or assigns.

In making the above disclaimer, the owner does not disclaim the terminal part of any patent granted on the above-identified application that would extend to the expiration date of the full statutory term as defined in 35 U.S.C. 154 and 173 of any patent(s) granted on said reference patent application, as the term of any patent(s) granted on said reference patent application may be shortened by any terminal disclaimer filed prior to the grant of any patent(s) on the pending reference application, in the event that it later: expires for failure to pay a maintenance fee, is held unenforceable, is found invalid by a court of competent jurisdiction, is statutorily disclaimed in whole or terminally disclaimed under 37 CFR 1.321, has all claims canceled by a reexamination certificate, is reissued or is in any matter terminated prior to the expiration of its full statutory term as presently shortened by any terminal disclaimer.

We hereby submit the amount of $80.00 to cover the statutory disclaimer fees for small entity. If any questions arise regarding this statutory disclaimer, please contact the undersigned attorney or agent of record.

Respectfully submitted,

Howard J. Yuan
Reg. No. 67,985

Date: June 29, 2012

Kokka & Backus, PC
703 High Street
Palo Alto, CA 94301
Tel: (650) 566-9917
Fax: (650) 566-9922

IN THE UNITED STATES PATENT AND TRADEMARK OFFICE

In re Application for:

Petit et al.

Application Serial No.: 12/606,140

Filing Date: October 26, 2009

For: ACOUSTIC VOICE ACTIVITY DETECTION (AVAD) FOR ELECTRONIC SYSTEMS

Examiner: AZAD, Abul K.

Group Art Unit: 2626

Date: June 29, 2012

Atty. Docket No.: ALI-055CON1CIP2

Certificate of Transmission
I hereby certify that this correspondence is being transmitted via the U.S. Patent and Trademark Office (USPTO) electronic filing system (EFS-Web) to the USPTO on June 29, 2012.

Signed: _____
Kate M. Cleland

WRITTEN ASSERTION FOR NOTIFICATION OF ENTITLEMENT TO SMALL ENTITY STATUS UNDER 37 CFR § 1.27(c)(1)

Dear Sir or Madam:

In accordance with 37 CFR § 1.27(c)(1), Applicant is submitting this written assertion for notification of entitlement to small entity status in the above-referenced patent application. This written assertion is intended to notify the Office of Applicant's entitlement to small entity status.

Please contact the undersigned representative below if you have any questions or require any additional information.

Respectfully submitted,

Howard J. Yuan
Reg. No. 67,985

KOKKA & BACKUS, PC
703 High Street
Palo Alto, CA 94301
Tel.: (650) 566-9917
Fax: (650) 566-9922

Electronic Patent Application Fee Transmittal	
Application Number:	12606140
Filing Date:	26-Oct-2009
Title of Invention:	Acoustic Voice Activity Detection (AVAD) for Electronic Systems
First Named Inventor/Applicant Name:	Nicolas Petit
Filer:	Howard J. Yuan/Kate Cleland
Attorney Docket Number:	ALI-055CON1CIP2
Filed as Small Entity	

Utility under 35 USC 111(a) Filing Fees

Description	Fee Code	Quantity	Amount	Sub-Total in USD($)
Basic Filing:				
Pages:				
Claims:				
Miscellaneous-Filing:				
Petition:				
Patent-Appeals-and-Interference:				
Post-Allowance-and-Post-Issuance:				
Extension-of-Time:				

Description	Fee Code	Quantity	Amount	Sub-Total in USD($)
Miscellaneous:				
Statutory or terminal disclaimer	2814	1	80	80
		Total in USD ($)		**80**

Electronic Acknowledgement Receipt

EFS ID:	13146402
Application Number:	12606140
International Application Number:	
Confirmation Number:	2189
Title of Invention:	Acoustic Voice Activity Detection (AVAD) for Electronic Systems
First Named Inventor/Applicant Name:	Nicolas Petit
Customer Number:	15516
Filer:	Howard J. Yuan
Filer Authorized By:	
Attorney Docket Number:	ALI-055CON1CIP2
Receipt Date:	29-JUN-2012
Filing Date:	26-OCT-2009
Time Stamp:	21:06:16
Application Type:	Utility under 35 USC 111(a)

Payment information:

Submitted with Payment	yes
Payment Type	Credit Card
Payment was successfully received in RAM	$80
RAM confirmation Number	8533
Deposit Account	
Authorized User	

File Listing:

Document Number	Document Description	File Name	File Size(Bytes)/ Message Digest	Multi Part /.zip	Pages (if appl.)

1		ALI-055CON1CIP2_Response_asfiled.pdf	1326601 [illegible]	yes	13
	Multipart Description/PDF files in .zip description				
	Document Description		**Start**	**End**	
	Amendment/Req. Reconsideration-After Non-Final Reject		1	10	
	Terminal Disclaimer Filed		11	12	
	Transmittal Letter		13	13	
Warnings:					
Information:					
2	Fee Worksheet (SB06)	fee-info.pdf	29917 [illegible]	no	2
Warnings:					
Information:					
		Total Files Size (in bytes):	1356518		

This Acknowledgement Receipt evidences receipt on the noted date by the USPTO of the indicated documents, characterized by the applicant, and including page counts, where applicable. It serves as evidence of receipt similar to a Post Card, as described in MPEP 503.

New Applications Under 35 U.S.C. 111
If a new application is being filed and the application includes the necessary components for a filing date (see 37 CFR 1.53(b)-(d) and MPEP 506), a Filing Receipt (37 CFR 1.54) will be issued in due course and the date shown on this Acknowledgement Receipt will establish the filing date of the application.

National Stage of an International Application under 35 U.S.C. 371
If a timely submission to enter the national stage of an international application is compliant with the conditions of 35 U.S.C. 371 and other applicable requirements a Form PCT/DO/EO/903 indicating acceptance of the application as a national stage submission under 35 U.S.C. 371 will be issued in addition to the Filing Receipt, in due course.

New International Application Filed with the USPTO as a Receiving Office
If a new international application is being filed and the international application includes the necessary components for an international filing date (see PCT Article 11 and MPEP 1810), a Notification of the International Application Number and of the International Filing Date (Form PCT/RO/105) will be issued in due course, subject to prescriptions concerning national security, and the date shown on this Acknowledgement Receipt will establish the international filing date of the application.

PTO/SB/06 (07-06)
Approved for use through 1/31/2007. OMB 0651-0032
U.S. Patent and Trademark Office; U.S. DEPARTMENT OF COMMERCE
Under the Paperwork Reduction Act of 1995, no persons are required to respond to a collection of information unless it displays a valid OMB control number.

PATENT APPLICATION FEE DETERMINATION RECORD

Substitute for Form PTO-875

Application or Docket Number	Filing Date	
12/606,140	10/26/2009	☐ To be Mailed

APPLICATION AS FILED – PART I

FOR	(Column 1) NUMBER FILED	(Column 2) NUMBER EXTRA	SMALL ENTITY ☐ RATE ($)	SMALL ENTITY FEE ($)	OR	OTHER THAN SMALL ENTITY RATE ($)	OTHER THAN SMALL ENTITY FEE ($)
☐ BASIC FEE (37 CFR 1.16(a), (b), or (c))	N/A	N/A	N/A			N/A	
☐ SEARCH FEE (37 CFR 1.16(k), (i), or (m))	N/A	N/A	N/A			N/A	
☐ EXAMINATION FEE (37 CFR 1.16(o), (p), or (q))	N/A	N/A	N/A			N/A	
TOTAL CLAIMS (37 CFR 1.16(i))	minus 20 =	*	X $ =		OR	X $ =	
INDEPENDENT CLAIMS (37 CFR 1.16(h))	minus 3 =	*	X $ =			X $ =	
☐ APPLICATION SIZE FEE (37 CFR 1.16(s))	If the specification and drawings exceed 100 sheets of paper, the application size fee due is $250 ($125 for small entity) for each additional 50 sheets or fraction thereof. See 35 U.S.C. 41(a)(1)(G) and 37 CFR 1.16(s).						
☐ MULTIPLE DEPENDENT CLAIM PRESENT (37 CFR 1.16(j))							
* If the difference in column 1 is less than zero, enter "0" in column 2.			TOTAL			TOTAL	

APPLICATION AS AMENDED – PART II

AMENDMENT 06/29/2012	(Column 1) CLAIMS REMAINING AFTER AMENDMENT		(Column 2) HIGHEST NUMBER PREVIOUSLY PAID FOR	(Column 3) PRESENT EXTRA	SMALL ENTITY RATE ($)	SMALL ENTITY ADDITIONAL FEE ($)	OR	OTHER THAN SMALL ENTITY RATE ($)	OTHER THAN SMALL ENTITY ADDITIONAL FEE ($)
Total (37 CFR 1.16(i))	* 44	Minus	** 44	= 0	X $ =		OR	X $60=	0
Independent (37 CFR 1.16(h))	* 3	Minus	***3	= 0	X $ =		OR	X $250=	0
☐ Application Size Fee (37 CFR 1.16(s))									
☐ FIRST PRESENTATION OF MULTIPLE DEPENDENT CLAIM (37 CFR 1.16(j))							OR		
					TOTAL ADD'L FEE		OR	TOTAL ADD'L FEE	0

AMENDMENT	(Column 1) CLAIMS REMAINING AFTER AMENDMENT		(Column 2) HIGHEST NUMBER PREVIOUSLY PAID FOR	(Column 3) PRESENT EXTRA	RATE ($)	ADDITIONAL FEE ($)		RATE ($)	ADDITIONAL FEE ($)
Total (37 CFR 1.16(i))	*	Minus	**	=	X $ =		OR	X $ =	
Independent (37 CFR 1.16(h))	*	Minus	***	=	X $ =		OR	X $ =	
☐ Application Size Fee (37 CFR 1.16(s))									
☐ FIRST PRESENTATION OF MULTIPLE DEPENDENT CLAIM (37 CFR 1.16(j))							OR		
					TOTAL ADD'L FEE		OR	TOTAL ADD'L FEE	

* If the entry in column 1 is less than the entry in column 2, write "0" in column 3.
** If the "Highest Number Previously Paid For" IN THIS SPACE is less than 20, enter "20".
*** If the "Highest Number Previously Paid For" IN THIS SPACE is less than 3, enter "3".
The "Highest Number Previously Paid For" (Total or Independent) is the highest number found in the appropriate box in column 1.

Legal Instrument Examiner:
/JAMES ELLIOTT/

This collection of information is required by 37 CFR 1.16. The information is required to obtain or retain a benefit by the public which is to file (and by the USPTO to process) an application. Confidentiality is governed by 35 U.S.C. 122 and 37 CFR 1.14. This collection is estimated to take 12 minutes to complete, including gathering, preparing, and submitting the completed application form to the USPTO. Time will vary depending upon the individual case. Any comments on the amount of time you require to complete this form and/or suggestions for reducing this burden, should be sent to the Chief Information Officer, U.S. Patent and Trademark Office, U.S. Department of Commerce, P.O. Box 1450, Alexandria, VA 22313-1450. DO NOT SEND FEES OR COMPLETED FORMS TO THIS ADDRESS. **SEND TO: Commissioner for Patents, P.O. Box 1450, Alexandria, VA 22313-1450.**
If you need assistance in completing the form, call 1-800-PTO-9199 and select option 2.

Application Number	Application/Control No.	Applicant(s)/Patent under Reexamination
	12/606,140	PETIT ET AL.

Document Code - DISQ	Internal Document – DO NOT MAIL

TERMINAL DISCLAIMER	☒ APPROVED	☐ DISAPPROVED
Date Filed : 06/29/2012	This patent is subject to a Terminal Disclaimer	

Approved/Disapproved by:

Dorethea Lawrence

U.S. Patent and Trademark Office

UNITED STATES PATENT AND TRADEMARK OFFICE

UNITED STATES DEPARTMENT OF COMMERCE
United States Patent and Trademark Office
Address: COMMISSIONER FOR PATENTS
P.O. Box 1450
Alexandria, Virginia 22313-1450
www.uspto.gov

NOTICE OF ALLOWANCE AND FEE(S) DUE

15516 7590 08/22/2012
Kokka & Backus, PC
703 High Street
Palo Alto, CA 94301

EXAMINER
AZAD, ABUL K

ART UNIT	PAPER NUMBER
2626	

DATE MAILED: 08/22/2012

APPLICATION NO.	FILING DATE	FIRST NAMED INVENTOR	ATTORNEY DOCKET NO.	CONFIRMATION NO.
12/606,140	10/26/2009	Nicolas Petit	ALI-055CON1CIP2	2189

TITLE OF INVENTION: ACOUSTIC VOICE ACTIVITY DETECTION (AVAD) FOR ELECTRONIC SYSTEMS

APPLN. TYPE	SMALL ENTITY	ISSUE FEE DUE	PUBLICATION FEE DUE	PREV. PAID ISSUE FEE	TOTAL FEE(S) DUE	DATE DUE
nonprovisional	NO	$1740	$300	$0	$2040	11/23/2012

THE APPLICATION IDENTIFIED ABOVE HAS BEEN EXAMINED AND IS ALLOWED FOR ISSUANCE AS A PATENT. PROSECUTION ON THE MERITS IS CLOSED. THIS NOTICE OF ALLOWANCE IS NOT A GRANT OF PATENT RIGHTS. THIS APPLICATION IS SUBJECT TO WITHDRAWAL FROM ISSUE AT THE INITIATIVE OF THE OFFICE OR UPON PETITION BY THE APPLICANT. SEE 37 CFR 1.313 AND MPEP 1308.

THE ISSUE FEE AND PUBLICATION FEE (IF REQUIRED) MUST BE PAID WITHIN THREE MONTHS FROM THE MAILING DATE OF THIS NOTICE OR THIS APPLICATION SHALL BE REGARDED AS ABANDONED. THIS STATUTORY PERIOD CANNOT BE EXTENDED. SEE 35 U.S.C. 151. THE ISSUE FEE DUE INDICATED ABOVE DOES NOT REFLECT A CREDIT FOR ANY PREVIOUSLY PAID ISSUE FEE IN THIS APPLICATION. IF AN ISSUE FEE HAS PREVIOUSLY BEEN PAID IN THIS APPLICATION (AS SHOWN ABOVE), THE RETURN OF PART B OF THIS FORM WILL BE CONSIDERED A REQUEST TO REAPPLY THE PREVIOUSLY PAID ISSUE FEE TOWARD THE ISSUE FEE NOW DUE.

HOW TO REPLY TO THIS NOTICE:

I. Review the SMALL ENTITY status shown above.

If the SMALL ENTITY is shown as YES, verify your current SMALL ENTITY status:

A. If the status is the same, pay the TOTAL FEE(S) DUE shown above.

B. If the status above is to be removed, check box 5b on Part B - Fee(s) Transmittal and pay the PUBLICATION FEE (if required) and twice the amount of the ISSUE FEE shown above, or

If the SMALL ENTITY is shown as NO:

A. Pay TOTAL FEE(S) DUE shown above, or

B. If applicant claimed SMALL ENTITY status before, or is now claiming SMALL ENTITY status, check box 5a on Part B - Fee(s) Transmittal and pay the PUBLICATION FEE (if required) and 1/2 the ISSUE FEE shown above.

II. PART B - FEE(S) TRANSMITTAL, or its equivalent, must be completed and returned to the United States Patent and Trademark Office (USPTO) with your ISSUE FEE and PUBLICATION FEE (if required). If you are charging the fee(s) to your deposit account, section "4b" of Part B - Fee(s) Transmittal should be completed and an extra copy of the form should be submitted. If an equivalent of Part B is filed, a request to reapply a previously paid issue fee must be clearly made, and delays in processing may occur due to the difficulty in recognizing the paper as an equivalent of Part B.

III. All communications regarding this application must give the application number. Please direct all communications prior to issuance to Mail Stop ISSUE FEE unless advised to the contrary.

IMPORTANT REMINDER: Utility patents issuing on applications filed on or after Dec. 12, 1980 may require payment of maintenance fees. It is patentee's responsibility to ensure timely payment of maintenance fees when due.

PTOL-85 (Rev. 02/11)

PART B - FEE(S) TRANSMITTAL

Complete and send this form, together with applicable fee(s), to: Mail **Mail Stop ISSUE FEE**
Commissioner for Patents
P.O. Box 1450
Alexandria, Virginia 22313-1450
or Fax (571)-273-2885

INSTRUCTIONS: This form should be used for transmitting the ISSUE FEE and PUBLICATION FEE (if required). Blocks 1 through 5 should be completed where appropriate. All further correspondence including the Patent, advance orders and notification of maintenance fees will be mailed to the current correspondence address as indicated unless corrected below or directed otherwise in Block 1, by (a) specifying a new correspondence address: and/or (b) indicating a separate "FEE ADDRESS" for maintenance fee notifications.

CURRENT CORRESPONDENCE ADDRESS (Note: Use Block 1 for any change of address)

15516 7590 08/22/2012
Kokka & Backus, PC
703 High Street
Palo Alto, CA 94301

Note: A certificate of mailing can only be used for domestic mailings of the Fee(s) Transmittal. This certificate cannot be used for any other accompanying papers. Each additional paper, such as an assignment or formal drawing, must have its own certificate of mailing or transmission.

Certificate of Mailing or Transmission

I hereby certify that this Fee(s) Transmittal is being deposited with the United States Postal Service with sufficient postage for first class mail in an envelope addressed to the Mail Stop ISSUE FEE address above, or being facsimile transmitted to the USPTO (571) 273-2885, on the date indicated below.

(Depositor's name)
(Signature)
(Date)

APPLICATION NO.	FILING DATE	FIRST NAMED INVENTOR	ATTORNEY DOCKET NO.	CONFIRMATION NO.
12/606,140	10/26/2009	Nicolas Petit	ALI-055CON1CIP2	2189

TITLE OF INVENTION: ACOUSTIC VOICE ACTIVITY DETECTION (AVAD) FOR ELECTRONIC SYSTEMS

APPLN. TYPE	SMALL ENTITY	ISSUE FEE DUE	PUBLICATION FEE DUE	PREV. PAID ISSUE FEE	TOTAL FEE(S) DUE	DATE DUE
nonprovisional	NO	$1740	$300	$0	$2040	11/23/2012

EXAMINER	ART UNIT	CLASS-SUBCLASS
AZAD, ABUL K	2626	704-233000

1. Change of correspondence address or indication of "Fee Address" (37 CFR 1.363).

❑ Change of correspondence address (or Change of Correspondence Address form PTO/SB/122) attached.

❑ "Fee Address" indication (or "Fee Address" Indication form PTO/SB/47; Rev 03-02 or more recent) attached. **Use of a Customer Number is required.**

2. For printing on the patent front page, list

(1) the names of up to 3 registered patent attorneys or agents OR, alternatively,

(2) the name of a single firm (having as a member a registered attorney or agent) and the names of up to 2 registered patent attorneys or agents. If no name is listed, no name will be printed.

1 _____
2 _____
3 _____

3. ASSIGNEE NAME AND RESIDENCE DATA TO BE PRINTED ON THE PATENT (print or type)

PLEASE NOTE: Unless an assignee is identified below, no assignee data will appear on the patent. If an assignee is identified below, the document has been filed for recordation as set forth in 37 CFR 3.11. Completion of this form is NOT a substitute for filing an assignment.

(A) NAME OF ASSIGNEE (B) RESIDENCE: (CITY and STATE OR COUNTRY)

Please check the appropriate assignee category or categories (will not be printed on the patent): ❑ Individual ❑ Corporation or other private group entity ❑ Government

4a. The following fee(s) are submitted:

❑ Issue Fee
❑ Publication Fee (No small entity discount permitted)
❑ Advance Order - # of Copies _____

4b. Payment of Fee(s): **(Please first reapply any previously paid issue fee shown above)**

❑ A check is enclosed.
❑ Payment by credit card. Form PTO-2038 is attached.
❑ The Director is hereby authorized to charge the required fee(s), any deficiency, or credit any overpayment, to Deposit Account Number _____ (enclose an extra copy of this form).

5. **Change in Entity Status** (from status indicated above)

❑ a. Applicant claims SMALL ENTITY status. See 37 CFR 1.27.
❑ b. Applicant is no longer claiming SMALL ENTITY status. See 37 CFR 1.27(g)(2).

NOTE: The Issue Fee and Publication Fee (if required) will not be accepted from anyone other than the applicant; a registered attorney or agent; or the assignee or other party in interest as shown by the records of the United States Patent and Trademark Office.

Authorized Signature _____ Date _____

Typed or printed name _____ Registration No. _____

This collection of information is required by 37 CFR 1.311. The information is required to obtain or retain a benefit by the public which is to file (and by the USPTO to process) an application. Confidentiality is governed by 35 U.S.C. 122 and 37 CFR 1.14. This collection is estimated to take 12 minutes to complete, including gathering, preparing, and submitting the completed application form to the USPTO. Time will vary depending upon the individual case. Any comments on the amount of time you require to complete this form and/or suggestions for reducing this burden, should be sent to the Chief Information Officer, U.S. Patent and Trademark Office, U.S. Department of Commerce, P.O. Box 1450, Alexandria, Virginia 22313-1450. DO NOT SEND FEES OR COMPLETED FORMS TO THIS ADDRESS. SEND TO: Commissioner for Patents, P.O. Box 1450, Alexandria, Virginia 22313-1450.

Under the Paperwork Reduction Act of 1995, no persons are required to respond to a collection of information unless it displays a valid OMB control number.

UNITED STATES PATENT AND TRADEMARK OFFICE

UNITED STATES DEPARTMENT OF COMMERCE
United States Patent and Trademark Office
Address: COMMISSIONER FOR PATENTS
P.O. Box 1450
Alexandria, Virginia 22313-1450
www.uspto.gov

APPLICATION NO.	FILING DATE	FIRST NAMED INVENTOR	ATTORNEY DOCKET NO.	CONFIRMATION NO.
12/606,140	10/26/2009	Nicolas Petit	AL1-055CON1CIP2	2189

15516 7590 08/22/2012
Kokka & Backus, PC
703 High Street
Palo Alto, CA 94301

EXAMINER
AZAD, ABUL K

ART UNIT	PAPER NUMBER
2626	

DATE MAILED: 08/22/2012

Determination of Patent Term Adjustment under 35 U.S.C. 154 (b)
(application filed on or after May 29, 2000)

The Patent Term Adjustment to date is 507 day(s). If the issue fee is paid on the date that is three months after the mailing date of this notice and the patent issues on the Tuesday before the date that is 28 weeks (six and a half months) after the mailing date of this notice, the Patent Term Adjustment will be 507 day(s).

If a Continued Prosecution Application (CPA) was filed in the above-identified application, the filing date that determines Patent Term Adjustment is the filing date of the most recent CPA.

Applicant will be able to obtain more detailed information by accessing the Patent Application Information Retrieval (PAIR) WEB site (http://pair.uspto.gov).

Any questions regarding the Patent Term Extension or Adjustment determination should be directed to the Office of Patent Legal Administration at (571)-272-7702. Questions relating to issue and publication fee payments should be directed to the Customer Service Center of the Office of Patent Publication at 1-(888)-786-0101 or (571)-272-4200.

PTOL-85 (Rev. 02/11)

Privacy Act Statement

The Privacy Act of 1974 (P.L. 93-579) requires that you be given certain information in connection with your submission of the attached form related to a patent application or patent. Accordingly, pursuant to the requirements of the Act, please be advised that: (1) the general authority for the collection of this information is 35 U.S.C. 2(b)(2); (2) furnishing of the information solicited is voluntary; and (3) the principal purpose for which the information is used by the U.S. Patent and Trademark Office is to process and/or examine your submission related to a patent application or patent. If you do not furnish the requested information, the U.S. Patent and Trademark Office may not be able to process and/or examine your submission, which may result in termination of proceedings or abandonment of the application or expiration of the patent.

The information provided by you in this form will be subject to the following routine uses:

1. The information on this form will be treated confidentially to the extent allowed under the Freedom of Information Act (5 U.S.C. 552) and the Privacy Act (5 U.S.C 552a). Records from this system of records may be disclosed to the Department of Justice to determine whether disclosure of these records is required by the Freedom of Information Act.
2. A record from this system of records may be disclosed, as a routine use, in the course of presenting evidence to a court, magistrate, or administrative tribunal, including disclosures to opposing counsel in the course of settlement negotiations.
3. A record in this system of records may be disclosed, as a routine use, to a Member of Congress submitting a request involving an individual, to whom the record pertains, when the individual has requested assistance from the Member with respect to the subject matter of the record.
4. A record in this system of records may be disclosed, as a routine use, to a contractor of the Agency having need for the information in order to perform a contract. Recipients of information shall be required to comply with the requirements of the Privacy Act of 1974, as amended, pursuant to 5 U.S.C. 552a(m).
5. A record related to an International Application filed under the Patent Cooperation Treaty in this system of records may be disclosed, as a routine use, to the International Bureau of the World Intellectual Property Organization, pursuant to the Patent Cooperation Treaty.
6. A record in this system of records may be disclosed, as a routine use, to another federal agency for purposes of National Security review (35 U.S.C. 181) and for review pursuant to the Atomic Energy Act (42 U.S.C. 218(c)).
7. A record from this system of records may be disclosed, as a routine use, to the Administrator, General Services, or his/her designee, during an inspection of records conducted by GSA as part of that agency's responsibility to recommend improvements in records management practices and programs, under authority of 44 U.S.C. 2904 and 2906. Such disclosure shall be made in accordance with the GSA regulations governing inspection of records for this purpose, and any other relevant (i.e., GSA or Commerce) directive. Such disclosure shall not be used to make determinations about individuals.
8. A record from this system of records may be disclosed, as a routine use, to the public after either publication of the application pursuant to 35 U.S.C. 122(b) or issuance of a patent pursuant to 35 U.S.C. 151. Further, a record may be disclosed, subject to the limitations of 37 CFR 1.14, as a routine use, to the public if the record was filed in an application which became abandoned or in which the proceedings were terminated and which application is referenced by either a published application, an application open to public inspection or an issued patent.
9. A record from this system of records may be disclosed, as a routine use, to a Federal, State, or local law enforcement agency, if the USPTO becomes aware of a violation or potential violation of law or regulation.

Notice of Allowability	Application No.	Applicant(s)	
	12/606,140	PETIT ET AL.	
	Examiner	Art Unit	
	ABUL AZAD	2626	

-- The MAILING DATE of this communication appears on the cover sheet with the correspondence address--

All claims being allowable, PROSECUTION ON THE MERITS IS (OR REMAINS) CLOSED in this application. If not included herewith (or previously mailed), a Notice of Allowance (PTOL-85) or other appropriate communication will be mailed in due course. **THIS NOTICE OF ALLOWABILITY IS NOT A GRANT OF PATENT RIGHTS.** This application is subject to withdrawal from issue at the initiative of the Office or upon petition by the applicant. See 37 CFR 1.313 and MPEP 1308.

1. ☒ This communication is responsive to *the communication filed on June 29, 2012*.

2. ☐ An election was made by the applicant in response to a restriction requirement set forth during the interview on _____; the restriction requirement and election have been incorporated into this action.

3. ☒ The allowed claim(s) is/are *1-44*.

4. ☐ Acknowledgment is made of a claim for foreign priority under 35 U.S.C. § 119(a)-(d) or (f).
   a) ☐ All b) ☐ Some* c) ☐ None of the:
      1. ☐ Certified copies of the priority documents have been received.
      2. ☐ Certified copies of the priority documents have been received in Application No. _____ .
      3. ☐ Copies of the certified copies of the priority documents have been received in this national stage application from the International Bureau (PCT Rule 17.2(a)).

   * Certified copies not received: _____.

Applicant has THREE MONTHS FROM THE "MAILING DATE" of this communication to file a reply complying with the requirements noted below. Failure to timely comply will result in ABANDONMENT of this application.
THIS THREE-MONTH PERIOD IS NOT EXTENDABLE.

5. ☐ A SUBSTITUTE OATH OR DECLARATION must be submitted. Note the attached EXAMINER'S AMENDMENT or NOTICE OF INFORMAL PATENT APPLICATION (PTO-152) which gives reason(s) why the oath or declaration is deficient.

6. ☐ CORRECTED DRAWINGS (as "replacement sheets") must be submitted.
   (a) ☐ including changes required by the Notice of Draftsperson's Patent Drawing Review (PTO-948) attached
      1) ☐ hereto or 2) ☐ to Paper No./Mail Date _____.
   (b) ☐ including changes required by the attached Examiner's Amendment / Comment or in the Office action of Paper No./Mail Date _____.

   Identifying indicia such as the application number (see 37 CFR 1.84(c)) should be written on the drawings in the front (not the back) of each sheet. Replacement sheet(s) should be labeled as such in the header according to 37 CFR 1.121(d).

7. ☐ DEPOSIT OF and/or INFORMATION about the deposit of BIOLOGICAL MATERIAL must be submitted. Note the attached Examiner's comment regarding REQUIREMENT FOR THE DEPOSIT OF BIOLOGICAL MATERIAL.

Attachment(s)

1. ☐ Notice of References Cited (PTO-892)
2. ☐ Notice of Draftperson's Patent Drawing Review (PTO-948)
3. ☐ Information Disclosure Statements (PTO/SB/08), Paper No./Mail Date _____
4. ☐ Examiner's Comment Regarding Requirement for Deposit of Biological Material
5. ☐ Notice of Informal Patent Application
6. ☐ Interview Summary (PTO-413), Paper No./Mail Date _____ .
7. ☐ Examiner's Amendment/Comment
8. ☒ Examiner's Statement of Reasons for Allowance
9. ☐ Other _____.

/ABUL AZAD/
Primary Examiner, Art Unit 2626

DETAILED ACTION

1. This action is in response to the communication filed on June 29, 2012.

2. Claims 1-44 are pending in this action.

Allowable Subject Matter

3. Claims 1-44 are allowed over the prior art of record.

4. The following is an examiner's statement of reasons for allowance:

The applicant teaches a method of detecting voice activity of a speaker. The prior art of record fails to teach or fairly suggest the claimed combinations of features. The prior art of record fails to teach or fairly suggest in combination with other limitations particularly, forming a first virtual microphone, forming a filter, and forming a second virtual microphone and then determining a presence of acoustic voice activity of a speaker when an energy ratio of energies of the first virtual microphone and the second virtual microphone is greater than a threshold value.

Any comments considered necessary by applicant must be submitted no later than the payment of the issue fee and, to avoid processing delays, should preferably accompany the issue fee. Such submissions should be clearly labeled "Comments on Statement of Reasons for Allowance."

Contact Information

Any inquiry concerning this communication or earlier communications from the examiner should be directed to **Abul K. Azad** whose telephone number is **(571) 272-7599.** If attempts to reach the examiner by telephone are unsuccessful, the examiner's supervisor, **David Hudspeth**, can be reached at **(571) 272-7843.**

Any response to this action should be mailed to:

Commissioner for Patents

P.O. Box 1450

Alexandria, VA 22313-1450

Or faxed to: **(571) 273-8300.**

Hand-delivered responses should be brought to **401 Dulany Street, Alexandria, VA-22314** (Customer Service Window).

Information regarding the status of an application may be obtained from the Patent Application Information Retrieval (PAIR) system. Status information for published applications may be obtained from either Private PAIR or Public PAIR. Status information for unpublished applications is available through Private PAIR only. For more information about the PAIR system, see http://pair-direct.uspto.gov. Should you have questions on access to the Private PAIR system, contact the Electronic Business Center (EBC) at 866-217-9197 (toll-free).

August 20, 2012

Abul K. Azad
Primary Examiner
Art Unit 2626

/ABUL AZAD/
Primary Examiner, Art Unit 2626

Issue Classification	Application/Control No.	Applicant(s)/Patent Under Reexamination
	12606140	PETIT ET AL.
	Examiner	**Art Unit**
	ABUL AZAD	2626

ORIGINAL		INTERNATIONAL CLASSIFICATION	
CLASS	SUBCLASS	CLAIMED	NON-CLAIMED
704	208	G 1 D L 11 / 06 (2006.01.01)	

CROSS REFERENCE(S)

CLASS	SUBCLASS (ONE SUBCLASS PER BLOCK)				
704	214				

☒ Claims renumbered in the same order as presented by applicant ☐ CPA ☒ T.D. ☐ R.1.47

Final	Original	Final	Original	Final	Original	Final	Original	Final	Original	Final	Original	Final	Original	Final	Original
	1		17		33										
	2		18		34										
	3		19		35										
	4		20		36										
	5		21		37										
	6		22		38										
	7		23		39										
	8		24		40										
	9		25		41										
	10		26		42										
	11		27		43										
	12		28		44										
	13		29												
	14		30												
	15		31												
	16		32												

NONE (Assistant Examiner)	(Date)	**Total Claims Allowed:** 44	
/ABUL AZAD/ Primary Examiner.Art Unit 2626 (Primary Examiner)	07/24/2012 (Date)	O.G. Print Claim(s) 1	O.G. Print Figure 5

Index of Claims	Application/Control No.	Applicant(s)/Patent Under Reexamination
	12606140	PETIT ET AL.
	Examiner	**Art Unit**
	ABUL AZAD	2626

✓	Rejected	-	Cancelled	N	Non-Elected	A	Appeal
=	Allowed	÷	Restricted	I	Interference	O	Objected

☒ Claims renumbered in the same order as presented by applicant ☐ CPA ☒ T.D. ☐ R.1.47

CLAIM		DATE								
Final	Original	05/14/2012	07/24/2012							
	1	✓	=							
	2	✓	=							
	3	✓	=							
	4	✓	=							
	5	✓	=							
	6	✓	=							
	7	✓	=							
	8	✓	=							
	9	✓	=							
	10	✓	=							
	11	✓	=							
	12	✓	=							
	13	✓	=							
	14	✓	=							
	15	✓	=							
	16	✓	=							
	17	✓	=							
	18	✓	=							
	19	✓	=							
	20	✓	=							
	21	✓	=							
	22	✓	=							
	23	✓	=							
	24	✓	=							
	25	✓	=							
	26	✓	=							
	27	✓	=							
	28	✓	=							
	29	✓	=							
	30	✓	=							
	31	✓	=							
	32	✓	=							
	33	✓	=							
	34	✓	=							
	35	✓	=							
	36	✓	=							

Index of Claims	Application/Control No.	Applicant(s)/Patent Under Reexamination
	12606140	PETIT ET AL.
	Examiner	**Art Unit**
	ABUL AZAD	2626

✓	Rejected	-	Cancelled	N	Non-Elected	A	Appeal
=	Allowed	÷	Restricted	I	Interference	O	Objected

☒ Claims renumbered in the same order as presented by applicant ☐ CPA ☒ T.D. ☐ R.1.47

CLAIM		DATE								
Final	Original	05/14/2012	07/24/2012							
	37	✓	=							
	38	✓	=							
	39	✓	=							
	40	✓	=							
	41	✓	=							
	42	✓	=							
	43	✓	=							
	44	✓	=							

Search Notes	Application/Control No.	Applicant(s)/Patent Under Reexamination
	12606140	PETIT ET AL.
	Examiner	**Art Unit**
	ABUL AZAD	2626

SEARCHED

Class	Subclass	Date	Examiner
704	208, 210, 214, 215	05/14/2012	/AA/
381	99, 100, 46	05/14/2012	/AA/
	Refresh above search	07/24/2012	/AA/

SEARCH NOTES

Search Notes	Date	Examiner
EAST searched see attached	05/10/2012	/AA/
EAST searched see attached	07/24/2012	/AA/

INTERFERENCE SEARCH

Class	Subclass	Date	Examiner
704	208, 214	07/24/2012	/AA/
	EAST US-PGPUB claim searched	07/24/2012	/AA/

EAST Search History

EAST Search History (Prior Art)

Ref #	Hits	Search Query	DBs	Default Operator	Plurals	Time Stamp
L1	230	virtual microphone	US-PGPUB; USPAT; USOCR; FPRS; EPO; JPO; DERWENT; IBM_TDB	ADJ	ON	2012/07/24 12:19
L2	3626	(first adj2 microphone) and (second adj2 microphone)	US-PGPUB; USPAT; USOCR; FPRS; EPO; JPO; DERWENT; IBM_TDB	ADJ	ON	2012/07/24 12:19
L3	37	L1 and L2	US-PGPUB; USPAT; USOCR; FPRS; EPO; JPO; DERWENT; IBM_TDB	ADJ	ON	2012/07/24 12:19
L4	31	L3 and filter	US-PGPUB; USPAT; USOCR; FPRS; EPO; JPO; DERWENT; IBM_TDB	ADJ	ON	2012/07/24 12:19
L5	5019	voice activity	US-PGPUB; USPAT; USOCR; FPRS; EPO; JPO; DERWENT; IBM_TDB	ADJ	ON	2012/07/24 12:19

L6	37	L1 and L5	US-PGPUB; USPAT; USOCR; FPRS; EPO; JPO; DERWENT; IBM_TDB	ADJ	ON	2012/07/24 12:19
L7	19	L6 and L2	US-PGPUB; USPAT; USOCR; FPRS; EPO; JPO; DERWENT; IBM_TDB	ADJ	ON	2012/07/24 12:19
L8	7	L7 and threshold	US-PGPUB; USPAT; USOCR; FPRS; EPO; JPO; DERWENT; IBM_TDB	ADJ	ON	2012/07/24 12:19
L9	7	L8 and energy	US-PGPUB; USPAT; USOCR; FPRS; EPO; JPO; DERWENT; IBM_TDB	ADJ	ON	2012/07/24 12:19
L10	3626	(first adj2 microphone) and (second adj2 microphone)	US-PGPUB; USPAT; USOCR; FPRS; EPO; JPO; DERWENT; IBM_TDB	ADJ	ON	2012/07/24 12:19
L11	1736	L10 and filter	US-PGPUB; USPAT; USOCR; FPRS; EPO; JPO; DERWENT; IBM_TDB	ADJ	ON	2012/07/24 12:19
L12	739	L11 and threshold	US-	ADJ	ON	2012/07/24

			PGPUB; USPAT; USOCR; FPRS; EPO; JPO; DERWENT; IBM_TDB			12:19
L13	25	L12 and (energy ratio)	US-PGPUB; USPAT; USOCR; FPRS; EPO; JPO; DERWENT; IBM_TDB	ADJ	ON	2012/07/24 12:19
L14	6	L13 and virtual	US-PGPUB; USPAT; USOCR; FPRS; EPO; JPO; DERWENT; IBM_TDB	ADJ	ON	2012/07/24 12:19
L15	1042	704/208,210,214,215.ccls.	US-PGPUB; USPAT; USOCR; FPRS; EPO; JPO; DERWENT; IBM_TDB	ADJ	ON	2012/07/24 12:19
L16	1	L15 and (virtual microphone)	US-PGPUB; USPAT; USOCR; FPRS; EPO; JPO; DERWENT; IBM_TDB	ADJ	ON	2012/07/24 12:19
L17	389	L15 and microphone	US-PGPUB; USPAT; USOCR; FPRS; EPO; JPO; DERWENT; IBM_TDB	ADJ	ON	2012/07/24 12:19
L18	109	L17 and (voice activity)	US-PGPUB;	ADJ	ON	2012/07/24 12:19

			USPAT; USOCR; FPRS; EPO; JPO; DERWENT; IBM_TDB			
L19	92	L18 and threshold	US-PGPUB; USPAT; USOCR; FPRS; EPO; JPO; DERWENT; IBM_TDB	ADJ	ON	2012/07/24 12:19
L20	6	L19 and (energy ratio)	US-PGPUB; USPAT; USOCR; FPRS; EPO; JPO; DERWENT; IBM_TDB	ADJ	ON	2012/07/24 12:19
L21	411	381/99,100,46.ccls.	US-PGPUB; USPAT; USOCR; FPRS; EPO; JPO; DERWENT; IBM_TDB	ADJ	ON	2012/07/24 12:19
L22	0	L21 and (voice activity)	US-PGPUB; USPAT; USOCR; FPRS; EPO; JPO; DERWENT; IBM_TDB	ADJ	ON	2012/07/24 12:19
L23	47	L21 and threshold	US-PGPUB; USPAT; USOCR; FPRS; EPO; JPO; DERWENT; IBM_TDB	ADJ	ON	2012/07/24 12:19
L24	0	L23 and (energy ratio)	US-PGPUB; USPAT;	ADJ	ON	2012/07/24 12:19

			USOCR; FPRS; EPO; JPO; DERWENT; IBM_TDB			
L25	1042	704/208,210,214,215.ccls.	US-PGPUB; USPAT; USOCR; FPRS; EPO; JPO; DERWENT; IBM_TDB	ADJ	ON	2012/07/24 12:19
L26	389	L25 and microphone	US-PGPUB; USPAT; USOCR; FPRS; EPO; JPO; DERWENT; IBM_TDB	ADJ	ON	2012/07/24 12:19
L27	109	L26 and (voice activity)	US-PGPUB; USPAT; USOCR; FPRS; EPO; JPO; DERWENT; IBM_TDB	ADJ	ON	2012/07/24 12:19
L28	92	L27 and threshold	US-PGPUB; USPAT; USOCR; FPRS; EPO; JPO; DERWENT; IBM_TDB	ADJ	ON	2012/07/24 12:19
L30	6	((energy ratio) with (virtual microphone))	US-PGPUB; USPAT; USOCR; FPRS; EPO; JPO; DERWENT; IBM_TDB	ADJ	ON	2012/07/24 12:23

EAST Search History (Interference)

Ref	Hits	Search Query	DBs	Default	Plurals	Time

Meta Platforms, Inc. Exhibit 1002
Page 242 of 309

#				Operator		Stamp
L29	3	((energy ratio) with (virtual microphone)).clm.	US-PGPUB; USPAT; UPAD	ADJ	ON	2012/07/24 12:22

7/24/2012 12:24:48 PM
C:\Users\aazad\Documents\EAST\Workspaces\12606146.wsp

PART B - FEE(S) TRANSMITTAL

Complete and send this form, together with applicable fee(s), to: Mail **Mail Stop ISSUE FEE**
Commissioner for Patents
P.O. Box 1450
Alexandria, Virginia 22313-1450
or Fax (571)-273-2885

INSTRUCTIONS: This form should be used for transmitting the ISSUE FEE and PUBLICATION FEE (if required). Blocks 1 through 5 should be completed where appropriate. All further correspondence including the Patent, advance orders and notification of maintenance fees will be mailed to the current correspondence address as indicated unless corrected below or directed otherwise in Block 1, by (a) specifying a new correspondence address; and/or (b) indicating a separate "FEE ADDRESS" for maintenance fee notifications.

CURRENT CORRESPONDENCE ADDRESS (Note: Use Block 1 for any change of address)

15516 7590 08/22/2012
Kokka & Backus, PC
703 High Street
Palo Alto, CA 94301

Note: A certificate of mailing can only be used for domestic mailings of the Fee(s) Transmittal. This certificate cannot be used for any other accompanying papers. Each additional paper, such as an assignment or formal drawing, must have its own certificate of mailing or transmission.

Certificate of Mailing or Transmission
I hereby certify that this Fee(s) Transmittal is being transmitted via the U.S. Patent and Trademark Office electronic filing system (EFS-Web) to the USPTO on the date indicated below or being facsimile transmitted to the USPTO (571) 273-2885, on the date indicated below.

Amiee H. Shin (Depositor's name)
(Signature)
November 1, 2012 (Date)

APPLICATION NO.	FILING DATE	FIRST NAMED INVENTOR	ATTORNEY DOCKET NO.	CONFIRMATION NO.
12/606,140	10/26/2009	Nicolas Petit	ALI-055CON1CIP2	2189

TITLE OF INVENTION: ACOUSTIC VOICE ACTIVITY DETECTION (AVAD) FOR ELECTRONIC SYSTEMS

APPLN. TYPE	SMALL ENTITY	ISSUE FEE DUE	PUBLICATION FEE DUE	PREV. PAID ISSUE FEE	TOTAL FEE(S) DUE	DATE DUE
nonprovisional	NO	$1740	$300	$0	$2040	11/23/2012

EXAMINER	ART UNIT	CLASS-SUBCLASS
AZAD, ABUL K	2626	704-233000

1. Change of correspondence address or indication of "Fee Address" (37 CFR 1.363).
☐ Change of correspondence address (or Change of Correspondence Address form PTO/SB/122) attached.
☐ "Fee Address" indication (or "Fee Address" Indication form PTO/SB/47; Rev 03-02 or more recent) attached. **Use of a Customer Number is required.**

2. For printing on the patent front page, list
(1) the names of up to 3 registered patent attorneys or agents OR, alternatively,
(2) the name of a single firm (having as a member a registered attorney or agent) and the names of up to 2 registered patent attorneys or agents. If no name is listed, no name will be printed.

1 KOKKA & BACKUS, PC
2
3

3. ASSIGNEE NAME AND RESIDENCE DATA TO BE PRINTED ON THE PATENT (print or type)
PLEASE NOTE: Unless an assignee is identified below, no assignee data will appear on the patent. If an assignee is identified below, the document has been filed for recordation as set forth in 37 CFR 3.11. Completion of this form is NOT a substitute for filing an assignment.

(A) NAME OF ASSIGNEE: AliphCom, Inc.
(B) RESIDENCE: (CITY and STATE OR COUNTRY): San Francisco, CA

Please check the appropriate assignee category or categories (will not be printed on the patent): ☐ Individual ☑ Corporation or other private group entity ☐ Government

4a. The following fee(s) are submitted:
☑ Issue Fee
☑ Publication Fee (No small entity discount permitted)
☐ Advance Order - # of Copies _____

4b. Payment of Fee(s): **(Please first reapply any previously paid issue fee shown above)**
☐ A check is enclosed.
☑ Payment by credit card via EFS-Web
☐ The Director is hereby authorized to charge the required fee(s), any deficiency, or credit any overpayment, to Deposit Account Number _____ (enclose an extra copy of this form).

5. **Change in Entity Status** (from status indicated above)
☑ a. Applicant claims SMALL ENTITY status. See 37 CFR 1.27.
☐ b. Applicant is no longer claiming SMALL ENTITY status. See 37 CFR 1.27(g)(2).

NOTE: The Issue Fee and Publication Fee (if required) will not be accepted from anyone other than the applicant; a registered attorney or agent; or the assignee or other party in interest as shown by the records of the United States Patent and Trademark Office.

Authorized Signature _____ Date November 1, 2012

Typed or printed name Scott S. Kokka Registration No. 51,893

This collection of information is required by 37 CFR 1.311. The information is required to obtain or retain a benefit by the public which is to file (and by the USPTO to process) an application. Confidentiality is governed by 35 U.S.C. 122 and 37 CFR 1.14. This collection is estimated to take 12 minutes to complete, including gathering, preparing, and submitting the completed application form to the USPTO. Time will vary depending upon the individual case. Any comments on the amount of time you require to complete this form and/or suggestions for reducing this burden, should be sent to the Chief Information Officer, U.S. Patent and Trademark Office, U.S. Department of Commerce, P.O. Box 1450, Alexandria, Virginia 22313-1450. DO NOT SEND FEES OR COMPLETED FORMS TO THIS ADDRESS. SEND TO: Commissioner for Patents, P.O. Box 1450, Alexandria, Virginia 22313-1450.

Under the Paperwork Reduction Act of 1995, no persons are required to respond to a collection of information unless it displays a valid OMB control number.

Electronic Patent Application Fee Transmittal

Application Number:	12606140
Filing Date:	26-Oct-2009
Title of Invention:	ACOUSTIC VOICE ACTIVITY DETECTION (AVAD) FOR ELECTRONIC SYSTEMS
First Named Inventor/Applicant Name:	Nicolas Petit
Filer:	Scott Susumu Kokka
Attorney Docket Number:	ALI-055CON1CIP2

Filed as Small Entity

Utility under 35 USC 111(a) Filing Fees

Description	Fee Code	Quantity	Amount	Sub-Total in USD($)
Basic Filing:				
Pages:				
Claims:				
Miscellaneous-Filing:				
Petition:				
Patent-Appeals-and-Interference:				
Post-Allowance-and-Post-Issuance:				
Utility Appl issue fee	2501	1	885	885
Publ. Fee- early, voluntary, or normal	1504	1	300	300

Description	Fee Code	Quantity	Amount	Sub-Total in USD($)
Extension-of-Time:				
Miscellaneous:				
		Total in USD ($)		1185

Electronic Acknowledgement Receipt

EFS ID:	14126208
Application Number:	12606140
International Application Number:	
Confirmation Number:	2189
Title of Invention:	ACOUSTIC VOICE ACTIVITY DETECTION (AVAD) FOR ELECTRONIC SYSTEMS
First Named Inventor/Applicant Name:	Nicolas Petit
Customer Number:	15516
Filer:	Scott Susumu Kokka
Filer Authorized By:	
Attorney Docket Number:	ALI-055CON1CIP2
Receipt Date:	01-NOV-2012
Filing Date:	26-OCT-2009
Time Stamp:	21:37:17
Application Type:	Utility under 35 USC 111(a)

Payment information:

Submitted with Payment	yes
Payment Type	Credit Card
Payment was successfully received in RAM	$1185
RAM confirmation Number	6693
Deposit Account	
Authorized User	

File Listing:

Document Number	Document Description	File Name	File Size(Bytes)/ Message Digest	Multi Part /.zip	Pages (if appl.)

1	Issue Fee Payment (PTO-85B)	ALI-055CON1CIP2_Issue_and_Publication_Fee_asfiled.pdf	89052 78c0d1868aa1dd89d2f4b4a5d74ba1c137b3489c	no	1
Warnings:					
Information:					
2	Fee Worksheet (SB06)	fee-info.pdf	31785 b6bbc2cbbc7d7c84e533590d05fe9711a30bcb98	no	2
Warnings:					
Information:					
		Total Files Size (in bytes):	120837		

This Acknowledgement Receipt evidences receipt on the noted date by the USPTO of the indicated documents, characterized by the applicant, and including page counts, where applicable. It serves as evidence of receipt similar to a Post Card, as described in MPEP 503.

New Applications Under 35 U.S.C. 111
If a new application is being filed and the application includes the necessary components for a filing date (see 37 CFR 1.53(b)-(d) and MPEP 506), a Filing Receipt (37 CFR 1.54) will be issued in due course and the date shown on this Acknowledgement Receipt will establish the filing date of the application.

National Stage of an International Application under 35 U.S.C. 371
If a timely submission to enter the national stage of an international application is compliant with the conditions of 35 U.S.C. 371 and other applicable requirements a Form PCT/DO/EO/903 indicating acceptance of the application as a national stage submission under 35 U.S.C. 371 will be issued in addition to the Filing Receipt, in due course.

New International Application Filed with the USPTO as a Receiving Office
If a new international application is being filed and the international application includes the necessary components for an international filing date (see PCT Article 11 and MPEP 1810), a Notification of the International Application Number and of the International Filing Date (Form PCT/RO/105) will be issued in due course, subject to prescriptions concerning national security, and the date shown on this Acknowledgement Receipt will establish the international filing date of the application.

UNITED STATES PATENT AND TRADEMARK OFFICE

UNITED STATES DEPARTMENT OF COMMERCE
United States Patent and Trademark Office
Address: COMMISSIONER FOR PATENTS
P.O. Box 1450
Alexandria, Virginia 22313-1450
www.uspto.gov

APPLICATION NO.	ISSUE DATE	PATENT NO.	ATTORNEY DOCKET NO.	CONFIRMATION NO.
12/606,140	12/04/2012	8326611	ALI-055CON1CIP2	2189

15516 7590 11/14/2012
Kokka & Backus, PC
703 High Street
Palo Alto, CA 94301

ISSUE NOTIFICATION

The projected patent number and issue date are specified above.

Determination of Patent Term Adjustment under 35 U.S.C. 154 (b)
(application filed on or after May 29, 2000)

The Patent Term Adjustment is 546 day(s). Any patent to issue from the above-identified application will include an indication of the adjustment on the front page.

If a Continued Prosecution Application (CPA) was filed in the above-identified application, the filing date that determines Patent Term Adjustment is the filing date of the most recent CPA.

Applicant will be able to obtain more detailed information by accessing the Patent Application Information Retrieval (PAIR) WEB site (http://pair.uspto.gov).

Any questions regarding the Patent Term Extension or Adjustment determination should be directed to the Office of Patent Legal Administration at (571)-272-7702. Questions relating to issue and publication fee payments should be directed to the Application Assistance Unit (AAU) of the Office of Data Management (ODM) at (571)-272-4200.

APPLICANT(s) (Please see PAIR WEB site http://pair.uspto.gov for additional applicants):

Nicolas Petit, San Francisco, CA;
Gregory Burnett, Dodge Center, MN;
Zhinian Jing, San Francisco, CA;

The United States represents the largest, most dynamic marketplace in the world and is an unparalleled location for business investment, innovation, and commercialization of new technologies. The USA offers tremendous resources and advantages for those who invest and manufacture goods here. Through SelectUSA, our nation works to encourage and facilitate business investment. To learn more about why the USA is the best country in the world to develop technology, manufacture products, and grow your business, visit SelectUSA.gov.

Large Entity Declaration

Schedule A – Patents assigned to *Assignee*

APPLICATION NUMBER	FILING DATE	PATENT NUMBER	ISSUE DATE
09/986,989	01 June 2004	6743587 ×	N/A
11/474,833	25 March 2008	7349586 ×	N/A
12/009,603	11 October 2011	8036498	N/A
12/168,592	27 June 2008	8254617	
12/168,617	27 June 2008	8280072	
12/606,146	26 October 2009	8321213	
× 12/606,140	26 October 2009	8326611	
11/199,856	08 August 2005	8340309	
12/032,768	19 February 2008	8382590	
10/940,214	13 September 2004	8398576	
11/481,147	05 July 2006	8403845	
13/454,040	23 April 2012	8446275	
12/772,963	03 May 2010	8452023	
12/354,689	15 January 2009	8523347	
10/400,282	24 March 2003	8467543	
12/163,675	27 June 2008	8477961	
12/972,995	03 May 2010	8488803	
12/006,607	03 January 2008	8489136	
12/139,355	13 June 2008	8494177	
12/244,670	02 October 2008	8503596	
12/772,947	03 May 2010	8503686	
12/139,373	13 June 2008	8503691	
12/139,361	13 June 2008	8503692	
13/246,617	29 September 2011	8509690	
13/429,839	22 March 2012	8529811	
11/925,965	28 October 2007	8708904	
10/430,182	5 May 2003	7068860 ×	
12/032,760	19 February 2008	8295635	

Liberation House
Castle Street, St Helier
Jersey JE1 1BL
Channel Islands

Tel +44 (0) 1534 888 711
Fax +44 (0) 1534 888 747
enquiries@cpaglobal.com

www.cpaglobal.com

FAX TO:

Pages 10

Commissioner of Patents and Trademarks
Attn. Maintenance Fee Branch
Office of Finance – Maintenance Fee Division
2051 Jamieson Ave – Suite 300
Alexandria, VA 22314

Fax no.: 001 571 273-6500

22 January 2015

URGENT

Dear Sirs,

Please see the attached entity status form to be amended to **LARGE** Entity status.

Please can you amend you records accordingly.

Many thanks for your assistance.

Kind regards,

Matthew Allman

Supplier Compliance

E:mallman@cpaglobal.com
T: 011 44 1534 811303
F: 011 44 1534 811347

Certificate of Facsimile Transmission

I hereby certify that this document is being facsimile transmitted to the USPTO at 001 571-273-6500 on the date shown below.

Date 22-Jan-15 Signed

Large Entity Declaration

PATENT
IN THE UNITED STATES PATENT AND TRADEMARK OFFICE

ASSERTION OF LARGE ENTITY STATUS
PURSUANT TO 37 C.F.R. §1.27 (g)(2)

Commissioner for Patents
Mail Stop M Correspondence
P.O. Box 1450
Alexandria, VA 22313-1450

Sir:

This communication hereby asserts that the patents identified in the attached Schedule A are entitled to large entity status.

Respectfully submitted,

COMPANY or FIRM NAME AND ADDRESS:

AliphCom dba Jawbone
BodyMedia, Inc.
99 Rhode Island Street
3rd Floor
San Francisco, CA 94103

Signature

Michael Luna
Printed Name

CTO
Title

OR

Reg. # if US Attorney_____

PATENT ASSIGNMENT COVER SHEET

Electronic Version v1.1
Stylesheet Version v1.2

EPAS ID: PAT3502102

SUBMISSION TYPE:	NEW ASSIGNMENT
NATURE OF CONVEYANCE:	SECURITY INTEREST

CONVEYING PARTY DATA

Name	Execution Date
ALIPHCOM	08/26/2015
MACGYVER ACQUISITION LLC	08/26/2015
ALIPH, INC.	08/26/2015
BODYMEDIA, INC.	08/26/2015
PROJECT PARIS ACQUISITION LLC	08/26/2015

RECEIVING PARTY DATA

Name:	BLACKROCK ADVISORS, LLC
Street Address:	1 UNIVERSITY SQUARE DRIVE
Internal Address:	C/O GLOBAL ALLOCATION GROUP
City:	PRINCETON
State/Country:	NEW JERSEY
Postal Code:	08540

PROPERTY NUMBERS Total: 604

Property Type	Number
Application Number:	10159770
Application Number:	13069244
Application Number:	13069264
Application Number:	13069275
Application Number:	13753441
Application Number:	29333427
Application Number:	29333428
Application Number:	29333430
Application Number:	29333431
Application Number:	29333432
Application Number:	10400292
Application Number:	10667207
Application Number:	10769302
Application Number:	11199856
Application Number:	11704552

Property Type	Number
Application Number:	11859460
Application Number:	11860004
Application Number:	11969737
Application Number:	11982956
Application Number:	12006607
Application Number:	12039718
Application Number:	12123364
Application Number:	12139333
Application Number:	12139344
Application Number:	12139355
Application Number:	12139361
Application Number:	12163592
Application Number:	12163617
Application Number:	12163647
Application Number:	12163675
Application Number:	12243718
Application Number:	12244670
Application Number:	12354689
Application Number:	12606140
Application Number:	12606146
Application Number:	12756051
Application Number:	12772947
Application Number:	12772963
Application Number:	12772975
Application Number:	12826643
Application Number:	12826658
Application Number:	12882482
Application Number:	12886919
Application Number:	13037057
Application Number:	13109839
Application Number:	13117539
Application Number:	13135728
Application Number:	13158372
Application Number:	13158416
Application Number:	13180000
Application Number:	13180320
Application Number:	13181486
Application Number:	13181500

Property Type	Number
Application Number:	13181511
Application Number:	13181512
Application Number:	13181513
Application Number:	13184422
Application Number:	13209047
Application Number:	13246617
Application Number:	13247975
Application Number:	13270976
Application Number:	13346719
Application Number:	13361919
Application Number:	13374746
Application Number:	13405240
Application Number:	13405241
Application Number:	13420568
Application Number:	13421576
Application Number:	13427839
Application Number:	13431725
Application Number:	13433204
Application Number:	13433208
Application Number:	13433213
Application Number:	13436765
Application Number:	13454040
Application Number:	13491345
Application Number:	13491524
Application Number:	13492770
Application Number:	13492776
Application Number:	13492857
Application Number:	13528830
Application Number:	13552462
Application Number:	13561033
Application Number:	13627997
Application Number:	13666932
Application Number:	13669356
Application Number:	13669369
Application Number:	13669375
Application Number:	13670419
Application Number:	13672392
Application Number:	13672398

Property Type	Number
Application Number:	13672451
Application Number:	13672671
Application Number:	13673846
Application Number:	13673857
Application Number:	13674080
Application Number:	13802266
Application Number:	13802283
Application Number:	13802305
Application Number:	13802319
Application Number:	13802409
Application Number:	13802425
Application Number:	13802442
Application Number:	13802528
Application Number:	13802646
Application Number:	13802674
Application Number:	13802689
Application Number:	13827683
Application Number:	13827754
Application Number:	13830770
Application Number:	13830860
Application Number:	13830927
Application Number:	13831139
Application Number:	13831260
Application Number:	13831301
Application Number:	13831447
Application Number:	13831485
Application Number:	13831689
Application Number:	13831698
Application Number:	13870843
Application Number:	13886173
Application Number:	13886254
Application Number:	13890143
Application Number:	13894850
Application Number:	13898451
Application Number:	13898465
Application Number:	13898472
Application Number:	13898474
Application Number:	13900943

Property Type	Number
Application Number:	13906109
Application Number:	13906244
Application Number:	13917225
Application Number:	13919307
Application Number:	13919339
Application Number:	13919919
Application Number:	13929718
Application Number:	13942503
Application Number:	13942623
Application Number:	13942674
Application Number:	13948160
Application Number:	13952532
Application Number:	13952552
Application Number:	13954331
Application Number:	13954367
Application Number:	13957383
Application Number:	13959707
Application Number:	13959708
Application Number:	13959709
Application Number:	13967317
Application Number:	14029300
Application Number:	14058125
Application Number:	14064189
Application Number:	14065393
Application Number:	14065400
Application Number:	14065415
Application Number:	14065419
Application Number:	14067444
Application Number:	14068551
Application Number:	14069008
Application Number:	14069031
Application Number:	14070437
Application Number:	14070443
Application Number:	14070446
Application Number:	14070452
Application Number:	14071531
Application Number:	14071546
Application Number:	14073550

Property Type	Number
Application Number:	14073696
Application Number:	14075523
Application Number:	14076014
Application Number:	14079632
Application Number:	14105119
Application Number:	14105127
Application Number:	14105146
Application Number:	14105157
Application Number:	14105159
Application Number:	14105172
Application Number:	14105173
Application Number:	14144494
Application Number:	14144499
Application Number:	14144505
Application Number:	14144512
Application Number:	14144513
Application Number:	14144514
Application Number:	14144516
Application Number:	14144517
Application Number:	14144518
Application Number:	14144519
Application Number:	14144521
Application Number:	14144524
Application Number:	14145849
Application Number:	14145852
Application Number:	14145856
Application Number:	14145879
Application Number:	14145887
Application Number:	14145894
Application Number:	14149805
Application Number:	14181589
Application Number:	14181595
Application Number:	14183425
Application Number:	14183463
Application Number:	14183472
Application Number:	14183490
Application Number:	14183491
Application Number:	14183493

Property Type	Number
Application Number:	14187317
Application Number:	14188602
Application Number:	14191284
Application Number:	14192432
Application Number:	14192463
Application Number:	14192610
Application Number:	14192620
Application Number:	14194424
Application Number:	14194495
Application Number:	14203464
Application Number:	14203467
Application Number:	14205138
Application Number:	14205151
Application Number:	14205215
Application Number:	14205263
Application Number:	14207183
Application Number:	14207203
Application Number:	14207221
Application Number:	14207235
Application Number:	14207243
Application Number:	14207263
Application Number:	14207420
Application Number:	14207429
Application Number:	14209329
Application Number:	14209690
Application Number:	14209959
Application Number:	14210201
Application Number:	14210234
Application Number:	14212832
Application Number:	14213439
Application Number:	14214065
Application Number:	14214086
Application Number:	14214254
Application Number:	14215038
Application Number:	14215047
Application Number:	14215051
Application Number:	14219648
Application Number:	14224868

Property Type	Number
Application Number:	14225339
Application Number:	14243747
Application Number:	14244677
Application Number:	14244759
Application Number:	14246971
Application Number:	14260221
Application Number:	14266697
Application Number:	14270242
Application Number:	14270249
Application Number:	14272464
Application Number:	14279253
Application Number:	14281856
Application Number:	14289617
Application Number:	14301220
Application Number:	14301227
Application Number:	14313895
Application Number:	14328665
Application Number:	14389766
Application Number:	14421815
Application Number:	14445051
Application Number:	14452496
Application Number:	14457051
Application Number:	14463556
Application Number:	14468327
Application Number:	29299133
Application Number:	29299134
Application Number:	29299135
Application Number:	29299139
Application Number:	29353843
Application Number:	29353844
Application Number:	29353846
Application Number:	29353847
Application Number:	29354212
Application Number:	29377627
Application Number:	29377628
Application Number:	29378325
Application Number:	29378327
Application Number:	29378328

Property Type	Number
Application Number:	29378329
Application Number:	29383495
Application Number:	29383712
Application Number:	29383714
Application Number:	29393916
Application Number:	29405617
Application Number:	29405623
Application Number:	29405625
Application Number:	29405626
Application Number:	29405627
Application Number:	29405628
Application Number:	29405630
Application Number:	29405631
Application Number:	29405633
Application Number:	29405634
Application Number:	29405635
Application Number:	29405636
Application Number:	29405637
Application Number:	29405638
Application Number:	29405639
Application Number:	29405640
Application Number:	29405641
Application Number:	29405642
Application Number:	29405643
Application Number:	29405644
Application Number:	29405645
Application Number:	29405646
Application Number:	29413571
Application Number:	29413572
Application Number:	29413573
Application Number:	29445283
Application Number:	29445286
Application Number:	29445287
Application Number:	29459899
Application Number:	29459900
Application Number:	62019327
Application Number:	62067428
Application Number:	62107411

Property Type	Number
Application Number:	14121355
Application Number:	14121463
Application Number:	14121465
Application Number:	14121938
Application Number:	14121939
Application Number:	14121940
Application Number:	14121941
Application Number:	14121942
Application Number:	14121943
Application Number:	14121944
Application Number:	14121947
Application Number:	14121948
Application Number:	14313901
Application Number:	14480048
Application Number:	14480070
Application Number:	14480427
Application Number:	14480446
Application Number:	14480452
Application Number:	14480462
Application Number:	14480628
Application Number:	14486978
Application Number:	14486997
Application Number:	14488042
Application Number:	14493298
Application Number:	14519116
Application Number:	14526503
Application Number:	14532789
Application Number:	14541064
Application Number:	14541134
Application Number:	14541135
Application Number:	14578297
Application Number:	14596127
Application Number:	14606995
Application Number:	14637387
Application Number:	14640013
Application Number:	14656683
Application Number:	14659521
Application Number:	09419600

Property Type	Number
Application Number:	09595660
Application Number:	09602537
Application Number:	09620579
Application Number:	09822890
Application Number:	09923181
Application Number:	10227575
Application Number:	10313255
Application Number:	10612894
Application Number:	10682293
Application Number:	10682759
Application Number:	10940214
Application Number:	10940889
Application Number:	11088002
Application Number:	11239748
Application Number:	11247049
Application Number:	11434949
Application Number:	11481147
Application Number:	11582896
Application Number:	11724373
Application Number:	11876623
Application Number:	11925906
Application Number:	11925965
Application Number:	11928039
Application Number:	11930036
Application Number:	11930053
Application Number:	11930081
Application Number:	11930091
Application Number:	11930092
Application Number:	11930094
Application Number:	12033722
Application Number:	12033731
Application Number:	12033741
Application Number:	12033746
Application Number:	12033751
Application Number:	12033753
Application Number:	12033760
Application Number:	12033766
Application Number:	12352911

Property Type	Number
Application Number:	12840109
Application Number:	13130282
Application Number:	13291879
Application Number:	13291982
Application Number:	13734433
Application Number:	13761409
Application Number:	13761557
Application Number:	14058485
Application Number:	14058493
Application Number:	14058501
Application Number:	14058563
Application Number:	14059054
Application Number:	14059072
Application Number:	14059117
Application Number:	14060004
Application Number:	14060010
Application Number:	14060029
Application Number:	14060047
Application Number:	14060072
Application Number:	14060082
Application Number:	14060092
Application Number:	14060122
Application Number:	14081369
Application Number:	14081406
Application Number:	14081880
Application Number:	14081889
Application Number:	14081901
Application Number:	14081928
Application Number:	14081935
Application Number:	14081942
Application Number:	14081951
Application Number:	14081956
Application Number:	14081967
Application Number:	14081972
Application Number:	14081979
Application Number:	14082070
Application Number:	14082176
Application Number:	14082178

Property Type	Number
Application Number:	14082179
Application Number:	14082180
Application Number:	14082183
Application Number:	14082185
Application Number:	14082186
Application Number:	14082188
Application Number:	14082189
Application Number:	14082190
Application Number:	14082192
Application Number:	14083372
Application Number:	14083382
Application Number:	14083389
Application Number:	14083397
Application Number:	14083401
Application Number:	14083404
Application Number:	14083407
Application Number:	14133607
Application Number:	14133610
Application Number:	14133612
Application Number:	14133615
Application Number:	14133619
Application Number:	14133620
Application Number:	14133622
Application Number:	14133625
Application Number:	14133626
Application Number:	14133634
Application Number:	14133638
Application Number:	14133640
Application Number:	14133641
Application Number:	14136750
Application Number:	14137027
Application Number:	14137087
Application Number:	14137126
Application Number:	14137233
Application Number:	14138030
Application Number:	14138033
Application Number:	14138024
Application Number:	14138043

Property Type	Number
Application Number:	14138046
Application Number:	14139871
Application Number:	14139872
Application Number:	14139873
Application Number:	14139875
Application Number:	14221506
Application Number:	14248576
Application Number:	14248776
Application Number:	14248830
Application Number:	14248853
Application Number:	14248885
Application Number:	14249135
Application Number:	14249211
Application Number:	14249235
Application Number:	14249262
Application Number:	14249290
Application Number:	14249314
Application Number:	14249318
Application Number:	14249328
Application Number:	14252090
Application Number:	14284947
Application Number:	14285018
Application Number:	14285036
Application Number:	14285092
Application Number:	14285159
Application Number:	14285194
Application Number:	14285232
Application Number:	14292105
Application Number:	14292368
Application Number:	14292735
Application Number:	14292831
Application Number:	14292833
Application Number:	14336413
Application Number:	14336448
Application Number:	14336539
Application Number:	14336571
Application Number:	14336598
Application Number:	14336625

Property Type	Number
Application Number:	29127587
Application Number:	29129931
Application Number:	29143975
Application Number:	29256362
Application Number:	29256753
Application Number:	29383860
Application Number:	29434003
Application Number:	14509034
Application Number:	14526499
Application Number:	14630618
Application Number:	14636157
Application Number:	14636158
Application Number:	95002354
Application Number:	95002360
Application Number:	95002366
Application Number:	95002367
Application Number:	95002371
Application Number:	95002376
Application Number:	95002382
Application Number:	14039258
Application Number:	09622910
Application Number:	09986989
Application Number:	29445284
Application Number:	29466527
Application Number:	29466531
Application Number:	29466534
Application Number:	29466536
Application Number:	29466539
Application Number:	29470963
Application Number:	29470964
Application Number:	29470965
Application Number:	29470966
Application Number:	29470967
Application Number:	29470968
Application Number:	29477005
Application Number:	29477006
Application Number:	29478533
Application Number:	29479052

Property Type	Number
Application Number:	29479055
Application Number:	29479058
Application Number:	29479060
Application Number:	29479064
Application Number:	29479066
Application Number:	29479069
Application Number:	29479071
Application Number:	29479074
Application Number:	29479077
Application Number:	29479078
Application Number:	29479079
Application Number:	29482849
Application Number:	29482850
Application Number:	29482851
Application Number:	29482852
Application Number:	29482854
Application Number:	29482855
Application Number:	29482856
Application Number:	29485103
Application Number:	29485118
Application Number:	29495368
Application Number:	29495369
Application Number:	29495373
Application Number:	29495376
Application Number:	29495380
Application Number:	29495384
Application Number:	29495387
Application Number:	29495389
Application Number:	29495390
Application Number:	29495394
Application Number:	29495395
Application Number:	29495397
Application Number:	29495399
Application Number:	29495400
Application Number:	29495404
Application Number:	29495405
Application Number:	29495406
Application Number:	29495407

Property Type	Number
Application Number:	29495669
Application Number:	29495670
Application Number:	29495674
Application Number:	29508180
Application Number:	29508184
Application Number:	29508185
Application Number:	29508187
Application Number:	29508193
Application Number:	29508196
Application Number:	29508200
Application Number:	29508205
Application Number:	29508207
Application Number:	29516012
Application Number:	29516014
Application Number:	29516015
Application Number:	29516016
Application Number:	29516017
Application Number:	29517054
Application Number:	29517056

CORRESPONDENCE DATA

Fax Number: (617)235-9802

Correspondence will be sent to the e-mail address first; if that is unsuccessful, it will be sent using a fax number, if provided; if that is unsuccessful, it will be sent via US Mail.

Phone: 6179517860

Email: ronald.duvernay@ropesgray.com

Correspondent Name: JOSHUA S. JACKSON

Address Line 1: PRUDENTIAL TOWER, 800 BOYLSTON STREET

Address Line 2: ROPES & GRAY LLP

Address Line 4: BOSTON, MASSACHUSETTS 02199-3600

ATTORNEY DOCKET NUMBER:	MFOG-652
NAME OF SUBMITTER:	JOSHUA S. JACKSON
SIGNATURE:	/j jackson/
DATE SIGNED:	08/27/2015
	This document serves as an Oath/Declaration (37 CFR 1.63).

Total Attachments: 32

source=MFOG Amended PAT Sec Int#page1.tif

source=MFOG Amended PAT Sec Int#page2.tif

source=MFOG Amended PAT Sec Int#page3.tif

source=MFOG Amended PAT Sec Int#page4.tif

source=MFOG Amended PAT Sec Int#page5.tif
source=MFOG Amended PAT Sec Int#page6.tif
source=MFOG Amended PAT Sec Int#page7.tif
source=MFOG Amended PAT Sec Int#page8.tif
source=MFOG Amended PAT Sec Int#page9.tif
source=MFOG Amended PAT Sec Int#page10.tif
source=MFOG Amended PAT Sec Int#page11.tif
source=MFOG Amended PAT Sec Int#page12.tif
source=MFOG Amended PAT Sec Int#page13.tif
source=MFOG Amended PAT Sec Int#page14.tif
source=MFOG Amended PAT Sec Int#page15.tif
source=MFOG Amended PAT Sec Int#page16.tif
source=MFOG Amended PAT Sec Int#page17.tif
source=MFOG Amended PAT Sec Int#page18.tif
source=MFOG Amended PAT Sec Int#page19.tif
source=MFOG Amended PAT Sec Int#page20.tif
source=MFOG Amended PAT Sec Int#page21.tif
source=MFOG Amended PAT Sec Int#page22.tif
source=MFOG Amended PAT Sec Int#page23.tif
source=MFOG Amended PAT Sec Int#page24.tif
source=MFOG Amended PAT Sec Int#page25.tif
source=MFOG Amended PAT Sec Int#page26.tif
source=MFOG Amended PAT Sec Int#page27.tif
source=MFOG Amended PAT Sec Int#page28.tif
source=MFOG Amended PAT Sec Int#page29.tif
source=MFOG Amended PAT Sec Int#page30.tif
source=MFOG Amended PAT Sec Int#page31.tif
source=MFOG Amended PAT Sec Int#page32.tif

AMENDED AND RESTATED PATENT SECURITY AGREEMENT

THIS AMENDED AND RESTATED PATENT SECURITY AGREEMENT (as it may be amended, restated or otherwise modified from time to time, the "Patent Security Agreement") is entered into as of August 26, 2015 by and among (i) AliphCom, a California corporation (the "Company"), MacGyver Acquisition LLC, a Delaware limited liability company, Aliph, Inc., a Delaware Corporation, BodyMedia, Inc., a Delaware corporation, and Project Paris Acquisition LLC, a Delaware limited liability company (each, a "Grantor", and collectively, the "Grantors"), and (ii) BlackRock Advisors, LLC, a Delaware limited liability company (the "Agent").

W I T N E S S E T H:

WHEREAS, each of the Grantors, the Purchasers identified therein and the Agent are entering into the Note Purchase Agreement, dated as of April 28, 2015, as amended by the First Amendment to Note Purchase Agreement; Omnibus Amendment to Secured Convertible Promissory Notes and Limited Consent, dated as of July 22, 2015 (as amended, restated, supplemented, or otherwise modified from time to time, the "Existing Note Purchase Agreement"), pursuant to which the Company issued certain secured convertible promissory notes (the "Notes") and the other Grantors agreed to Guarantee the Obligations;

WHEREAS, each of the Grantors and the Agent entered into the original Security Agreement, dated as of April 28, 2015 (as amended, restated, supplemented, or otherwise modified from time to time, the "Original Security Agreement"), in order to induce the Purchasers to purchase the Notes and to secure the Secured Obligations; and

WHEREAS, pursuant to the Original Security Agreement, each of the Grantors is required to execute and deliver to Agent the original Patent Security Agreement, dated as of April 28, 2015 (the "Original Patent Security Agreement");

WHEREAS, each of the Grantors, the Purchasers identified therein and the Agent entered into the Note Purchase Agreement, dated as of July 21, 2015 (as amended, restated, supplemented, or otherwise modified from time to time, the "July 2015 Note Purchase Agreement"), pursuant to which the Company issued certain additional Notes and the other Grantors agreed to Guarantee the Secured Obligations;

WHEREAS, each of the Grantors and the Agent entered into the Amended and Restated Security Agreement, dated as of July 22, 2015 (as amended, restated, supplemented, or otherwise modified from time to time, the "Security Agreement"), in order to induce the Purchasers to purchase the additional Notes and to secure the Secured Obligations; and

WHEREAS, the parties to the Original Patent Security Agreement wish to amend and restate the Original Patent Security Agreement in its entirety;

NOW, THEREFORE, in consideration of the premises and mutual covenants herein contained and for other good and valuable consideration, the receipt and sufficiency of which are hereby acknowledged, each Grantor hereby agrees as follows:

1. DEFINED TERMS. All initially capitalized terms used but not otherwise defined herein have the meanings given to them in the Security Agreement, and this Patent Security Agreement shall be subject to the rules of construction set forth in the Security Agreement, which rules of construction are incorporated herein by this reference, *mutatis mutandis*.

2. GRANT OF SECURITY INTEREST IN PATENT COLLATERAL. Each Grantor does hereby unconditionally grant, assign, and pledge to Agent, and agrees to unconditionally grant, assign, and pledge to Agent, for its benefit and the benefit of each of the Noteholders, to secure the Secured Obligations, as applicable, a continuing security interest (referred to in this Patent Security Agreement as the "Security Interest") in all of such Grantor's entire right, title and interest in and to the following, whether now owned or hereafter acquired or arising (collectively, the "Patent Collateral"):

(a) all of such Grantor's Patents and Patent Intellectual Property Licenses to which it is a party including those referred to on Schedule I;

(b) all applications, improvements, divisionals, continuations, continuations-in-part, reissues, reexaminations, or extensions of the foregoing, foreign counterparts, and the inventions covered thereby;

(c) all files and records relating to the prosecution, exploitation, and defense of any of the foregoing, and all rights of action pertaining to the Grantor's Patents; and

(d) all products and proceeds of the foregoing, including any claim by such Grantor against third parties for past, present or future infringement of any Patent or any Patent exclusively licensed under any Intellectual Property License, including the right to receive damages, or right to receive license fees, royalties, and other compensation under any Patent Intellectual Property License.

3. SECURITY FOR SECURED OBLIGATIONS. This Patent Security Agreement and the Security Interest created hereby secures the payment and performance of the Secured Obligations, whether now existing or arising hereafter. Without limiting the generality of the foregoing, this Patent Security Agreement secures the payment of all amounts which constitute part of the Secured Obligations and would be owed by Grantors, or any of them, to Agent, or the Noteholders, whether or not they are unenforceable or not allowable due to the existence of an Insolvency Proceeding involving any Grantor.

4. SECURITY AGREEMENT. The Security Interest granted pursuant to this Patent Security Agreement is granted in conjunction with the security interests granted to Agent, for its benefit and the benefit of the Noteholders, pursuant to the Security Agreement. Each Grantor hereby acknowledges and affirms that the rights and remedies of Agent with respect to the Security Interest in the Patent Collateral made and granted hereby are more fully set forth in the Security Agreement, the terms and provisions of which are incorporated by reference herein as if fully set forth herein. To the extent there is any inconsistency between this Patent Security Agreement and the Security Agreement, the Security Agreement shall control.

5. AUTHORIZATION TO SUPPLEMENT. If any Grantor shall obtain rights to any new patent application or issued patent or become entitled to the benefit of any patent application or patent for any improvement, divisional, continuation, continuation-in-part, reissue, or reexamination of any existing patent or patent application, or any inventions covered thereby, the provisions of this Patent Security Agreement shall automatically apply thereto. Grantors hereby authorize Agent unilaterally to modify this Patent Security Agreement by amending Schedule I to include any such new patent rights of each Grantor. Notwithstanding the foregoing, no failure to so modify this Patent Security Agreement or amend Schedule I shall in any way affect, invalidate or detract from Agent's continuing security interest in all Collateral, whether or not listed on Schedule I.

6. COUNTERPARTS. This Patent Security Agreement is a Note Document. This Patent Security Agreement may be executed in any number of counterparts and by different parties on separate counterparts, each of which, when executed and delivered, shall be deemed to be an original, and all of which, when taken together, shall constitute but one and the same Patent Security Agreement. Delivery

of an executed counterpart of this Patent Security Agreement by telefacsimile or other electronic method of transmission shall be equally as effective as delivery of an original executed counterpart of this Patent Security Agreement. Any party delivering an executed counterpart of this Patent Security Agreement by telefacsimile or other electronic method of transmission also shall deliver an original executed counterpart of this Patent Security Agreement but the failure to deliver an original executed counterpart shall not affect the validity, enforceability, and binding effect of this Patent Security Agreement.

7. CHOICE OF LAW AND VENUE. JURY TRIAL WAIVER. THIS PATENT SECURITY AGREEMENT SHALL BE SUBJECT TO THE PROVISIONS REGARDING CHOICE OF LAW AND VENUE AND JURY TRIAL WAIVER SET FORTH IN SECTIONS 8.16, 8.17 AND 8.18 OF THE SECURITY AGREEMENT, AND SUCH PROVISIONS ARE INCORPORATED HEREIN BY THIS REFERENCE, *MUTATIS MUTANDIS*.

8. ORIGINAL PATENT SECURITY AGREEMENT AMENDED AND RESTATED. This Patent Security Agreement is an amendment and restatement of the Original Patent Security Agreement. This Patent Security Agreement is in no way intended to constitute a novation of the Original Patent Security Agreement or the "Obligations" (as defined in the Existing Note Purchase Agreement and the July 2015 Note Purchase Agreement). Any security granted pursuant to or in connection with the Original Patent Security Agreement and the other documents executed in connection therewith shall continue to secure the Secured Obligations.

[signature page follows]

IN WITNESS WHEREOF, the parties hereto have caused this Patent Security Agreement to be executed and delivered as of the day and year first above written.

GRANTORS:

ALIPHCOM,
a California corporation

DocuSigned by:
Hosain Rahman
By: 0E4D8FA187D24C0...
Name: Hosain Rahman
Title: Chief Executive Officer

ALIPH, INC.,
a Delaware corporation

DocuSigned by:
Hosain Rahman
By: 0E4D8FA187D24C0...
Name: Hosain Rahman
Title: Chief Executive Officer

MACGYVER ACQUISITION, LLC,
a Delaware limited liability company
by ALIPHCOM, as sole member

DocuSigned by:
Hosain Rahman
By: 0E4D8FA187D24C0...
Name: Hosain Rahman
Title: Chief Executive Officer

BODYMEDIA, INC.,
a Delaware corporation

DocuSigned by:
Hosain Rahman
By: 0E4D8FA187D24C0...
Name: Hosain Rahman
Title: Chief Executive Officer

PROJECT PARIS ACQUISITION LLC, a Delaware limited liability company
by ALIPHCOM, as sole member

DocuSigned by:
Hosain Rahman
By: 0E4D8FA187D24C0...
Name: Hosain Rahman
Title: Chief Executive Officer

[SIGNATURE PAGE TO AMENDED AND RESTATED PATENT SECURITY AGREEMENT]

AGENT:

ACCEPTED AND ACKNOWLEDGED BY:

BLACKROCK ADVISORS, LLC

By: _____
Name: Lisa O'Donnell
Title: Managing Director, Authorized Signatory

[SIGNATURE PAGE TO AMENDED AND RESTATED PATENT SECURITY AGREEMENT]

SCHEDULE I
to
PATENT SECURITY AGREEMENT

Patents

Current Owner	Country	Patent No.	Application No.	Filed
Aliph, Inc.	U.S.	7246058B2	10159770	5/30/2002
Aliph, Inc.	U.S.		13069244	3/22/2011
Aliph, Inc.	U.S.		13069264	3/22/2011
Aliph, Inc.	U.S.		13069275	3/22/2011
Aliph, Inc.	U.S.	8,942,383	13753441	1/29/2013
Aliph, Inc.	U.S.	D0609901S	29333427	3/9/2009
Aliph, Inc.	U.S.	D0610579S	29333428	3/9/2009
Aliph, Inc.	U.S.	D0614179S	29333430	3/9/2009
Aliph, Inc.	U.S.	D0609900S	29333431	3/9/2009
Aliph, Inc.	U.S.	D0620247S	29333432	3/9/2009
Aliphcom, Inc.	U.S.	8467543B2	10400282	3/27/2003
Aliphcom, Inc.	U.S.	8019091B2	10667207	9/18/2003
Aliphcom, Inc.	U.S.	7433484B2	10769302	1/30/2004
Aliphcom, Inc.	U.S.	8340309B2	11199856	8/8/2005

Aliphcom	U.S.	8810732B1	11704552	2/9/2007
Aliphcom	U.S.	8839342B2	11859460	9/21/2007
Aliphcom	U.S.	8320824B2	11860004	9/24/2007
Aliphcom	U.S.	7929446	11969737	1/4/2008
Aliphcom	U.S.		11982956	11/5/2007
Aliphcom	U.S.	8489136B2	12006607	1/3/2008
AliphCom, Inc.	U.S.	8055307	12039718	2/18/2008
Aliphcom, Inc.	U.S.	8625816B2	12123364	5/19/2008
Aliphcom, Inc.	U.S.	8503691B2	12139333	6/13/2008
Aliphcom, Inc.	U.S.	8837746B2	12139344	6/13/2008
Aliphcom, Inc.	U.S.	8494177B2	12139355	6/13/2008
Aliphcom, Inc.	U.S.	8503692B2	12139361	6/13/2008

Aliphcom, Inc.	U.S.	8254617B2	12163592	6/27/2008
Aliphcom, Inc.	U.S.	8280072B2	12163617	6/27/2008
Aliphcom, Inc.	U.S.		12163647	6/27/2008
Aliphcom, Inc.	U.S.	8477961B2	12163675	6/27/2008
Aliphcom, Inc.	U.S.	8130984B2	12243718	10/1/2008
Aliphcom, Inc.	U.S.	8503596B2	12244670	10/2/2008
Aliphcom, Inc.	U.S.	8452347B2	12354689	1/15/2009
Aliphcom, Inc.	U.S.	8326611B2	12606140	10/26/2009
Aliphcom, Inc.	U.S.	8321213B2	12606146	10/26/2009
Aliphcom, Inc.	U.S.		12756051	4/7/2010
Aliphcom, Inc.	U.S.	8503686B2	12772947	5/3/2010
Aliphcom, Inc.	U.S.	8452023B2	12772963	5/3/2010
Aliphcom, Inc.	U.S.	8488803B2	12772975	5/3/2010

Aliphcom, Inc.	U.S.	8699721B2	12826643	6/29/2010
Aliphcom, Inc.	U.S.	8731211B2	12826658	6/29/2010
Aliphcom, Inc.	U.S.	8842848B2	12882482	9/15/2010
Aliphcom, Inc.	U.S.	9003429	12886919	9/21/2010
Aliphcom, Inc.	U.S.		13037057	2/28/2011
AliphCom	U.S.		13109839	5/17/2011
Aliphcom, Inc.	U.S.	8817642B2	13117539	5/27/2011
Aliphcom, Inc.	U.S.		13135728	7/12/2011
Aliphcom, Inc.	U.S.		13158372	6/10/2011
Aliphcom, Inc.	U.S.		13158416	6/11/2011
Aliphcom	U.S.		13180000	7/11/2011
Aliphcom	U.S.	8793522B2	13180320	7/11/2011
Aliphcom	U.S.		13181486	7/12/2011

Aliphcom	U.S.		13181500	7/12/2011
Aliphcom	U.S.		13181511	7/12/2011
Aliphcom	U.S.		13181512	7/12/2011
Aliphcom	U.S.		13181513	7/12/2011
Aliphcom	U.S.	8838184B2	13184422	7/15/2011
Aliphcom	U.S.		13209047	8/12/2011
AliphCom, Inc.	U.S.	8509690B2	13246617	9/27/2011
Aliphcom	U.S.		13247975	9/28/2011
Aliphcom	U.S.	8804986B2	13270976	10/11/2011
Aliphcom	U.S.		13346719	1/9/2012
Aliphcom	U.S.		13361919	1/30/2012
Aliphcom	U.S.		13374746	1/9/2012

Aliphcom	U.S.		13405240	2/25/2012
Aliphcom	U.S.		13405241	2/25/2012
Aliphcom	U.S.		13420568	3/14/2012
Aliphcom	U.S.		13421576	3/15/2012
Aliphcom	U.S.	8529811B2	13427839	3/22/2012
Aliphcom, Inc.	U.S.		13431725	3/27/2012
Aliphcom	U.S.		13433204	3/28/2012
Aliphcom	U.S.		13433208	3/28/2012
Aliphcom	U.S.		13433213	3/28/2012
Aliphcom, Inc.	U.S.	8682018B2	13436765	3/30/2012
Aliphcom, Inc.	U.S.	8446275B2	13454040	4/23/2012
Aliphcom	U.S.		13491345	6/7/2012

Aliphcom	U.S.		13491524	6/7/2012
Aliphcom	U.S.		13492770	6/8/2012
Aliphcom	U.S.		13492776	6/8/2012
Aliphcom	U.S.		13492857	6/9/2012
Aliphcom	U.S.		13528830	6/20/2012
AliphCom	U.S.		13552462	7/18/2012
Aliphcom	U.S.		13561033	7/28/2012
AliphCom	U.S.		13627997	9/26/2012
AliphCom, Inc.	U.S.		13666932	11/1/2012
AliphCom, Inc.	U.S.		13669356	11/5/2012
AliphCom, Inc.	U.S.		13669369	11/5/2012
AliphCom, Inc.	U.S.		13669375	11/5/2012
AliphCom	U.S.		13670419	11/6/2012
AliphCom	U.S.		13672392	11/8/2012
Aliphcom	U.S.		13672398	11/8/2012
AliphCom	U.S.		13672451	11/8/2012

Aliphcom	U.S.		13672671	11/8/2012
AliphCom	U.S.		13673846	11/9/2012
AliphCom	U.S.		13673857	11/9/2012
AliphCom	U.S.		13674080	11/11/2012
AliphCom	U.S.	8934654B2	13802266	3/13/2013
AliphCom	U.S.		13802283	3/13/2013
AliphCom	U.S.		13802305	3/13/2013
AliphCom	U.S.		13802319	3/13/2013
AliphCom	U.S.		13802409	3/13/2013
AliphCom	U.S.		13802425	3/13/2013
AliphCom	U.S.		13802442	3/13/2013
Aliphcom, Inc.	U.S.		13802528	3/13/2013
AliphCom	U.S.		13802646	3/13/2013
Aliphcom	U.S.		13802674	3/13/2013
Aliphcom	U.S.		13802689	3/13/2013
Aliphcom	U.S.		13827683	3/14/2013
AliphCom	U.S.		13827754	3/14/2013
AliphCom	U.S.		13830770	3/14/2013
Aliphcom	U.S.		13830860	3/14/2013
Aliphcom	U.S.		13830927	3/14/2013
Aliphcom	U.S.		13831139	3/14/2013

AliphCom	U.S.		13831260	3/14/2013
AliphCom	U.S.		13831301	3/14/2013
AliphCom	U.S.		13831447	3/14/2013
Aliphcom	U.S.		13831485	3/14/2013
AliphCom	U.S.		13831689	3/15/2013
AliphCom	U.S.		13831698	3/15/2013
Aliphcom	U.S.		13871843	4/26/2013
AliphCom	U.S.		13886173	5/2/2013
Aliphcom	U.S.		13886254	5/2/2013
AliphCom	U.S.		13890143	5/8/2013
AliphCom	U.S.		13894850	5/15/2013
Aliphcom	U.S.		13898451	5/20/2013
AliphCom	U.S.		13898465	5/20/2013
AliphCom	U.S.		13898472	5/21/2013
AliphCom	U.S.		13898474	5/21/2013
AliphCom	U.S.		13900943	5/23/2013
AliphCom	U.S.		13906109	5/30/2013
AliphCom	U.S.		13906244	5/30/2013
AliphCom	U.S.		13917225	6/13/2013
Aliphcom	U.S.		13919307	6/17/2013
Aliphcom	U.S.		13919339	6/17/2013
AliphCom	U.S.		13919919	6/17/2013

AliphCom	U.S.		13929718	6/27/2013
Aliphcom	U.S.		13942503	7/15/2013
Aliphcom	U.S.		13942623	7/15/2013
Aliphcom	U.S.		13942674	7/15/2013
Aliphcom, Inc.	U.S.		13948160	7/22/2013
AliphCom	U.S.		13952532	7/26/2013
AliphCom	U.S.		13952552	7/26/2013
AliphCom	U.S.		13954331	7/30/2013
AliphCom	U.S.		13954367	7/30/2013
AliphCom	U.S.		13957383	8/1/2013
Aliphcom	U.S.		13959707	8/5/2013
Aliphcom, Inc.	U.S.		13959708	8/5/2013
Aliphcom	U.S.		13959709	8/5/2013
AliphCom	U.S.		13967317	8/14/2013
AliphCom	U.S.		14029300	9/17/2013
AliphCom	U.S.		14058125	10/18/2013
AliphCom	U.S.		14064189	10/27/2013
AliphCom	U.S.		14065393	10/28/2013
AliphCom	U.S.		14065400	10/28/2013
AliphCom	U.S.		14065415	10/28/2013
AliphCom	U.S.		14065419	10/29/2013
AliphCom	U.S.		14067444	10/30/2013
AliphCom	U.S.		14068551	10/31/2013
AliphCom	U.S.		14069008	10/31/2013
AliphCom	U.S.		14069031	10/31/2013

AliphCom	U.S.		14070437	11/1/2013
Aliphcom	U.S.		14070443	11/1/2013
AliphCom	U.S.		14070446	11/1/2013
AliphCom	U.S.		14070452	11/1/2013
AliphCom	U.S.		14071531	11/4/2013
AliphCom	U.S.		14071546	11/4/2013
AliphCom	U.S.		14073550	11/6/2013
AliphCom	U.S.		14073696	11/6/2013
AliphCom	U.S.		14075523	11/8/2013
AliphCom	U.S.		14076014	11/8/2013
AliphCom	U.S.		14079632	11/13/2013
AliphCom	U.S.		14105119	12/12/2013
AliphCom	U.S.		14105127	12/12/2013
AliphCom	U.S.		14105146	12/12/2013
AliphCom	U.S.		14105157	12/12/2013
AliphCom	U.S.		14105159	12/12/2013
AliphCom	U.S.		14105172	12/12/2013
AliphCom	U.S.		14105173	12/12/2013
AliphCom	U.S.		14144494	12/30/2013
AliphCom	U.S.		14144499	12/30/2013
AliphCom	U.S.		14144505	12/30/2013
AliphCom	U.S.		14144512	12/30/2013
AliphCom	U.S.		14144513	12/30/2013
AliphCom	U.S.		14144514	12/30/2013
AliphCom	U.S.		14144516	12/30/2013
AliphCom	U.S.		14144517	12/30/2013
AliphCom	U.S.		14144518	12/30/2013
AliphCom	U.S.		14144519	12/30/2013
AliphCom	U.S.		14144521	12/30/2013
AliphCom	U.S.		14144524	12/30/2013

AliphCom	U.S.		14145849	12/31/2013
AliphCom	U.S.		14145852	12/31/2013
AliphCom	U.S.		14145856	12/31/2013
Aliphcom	U.S.		14145879	12/31/2013
AliphCom	U.S.		14145887	12/31/2013
AliphCom	U.S.		14145894	12/31/2013
AliphCom	U.S.		14149805	1/7/2014
AliphCom	U.S.		14181589	2/14/2014
AliphCom	U.S.		14181595	2/18/2014
AliphCom	U.S.		14183425	2/18/2014
AliphCom	U.S.		14183463	2/18/2014
AliphCom	U.S.		14183472	2/18/2014
AliphCom	U.S.		14183490	2/18/2014
AliphCom	U.S.		14183491	2/18/2014
AliphCom	U.S.		14183493	2/18/2014
AliphCom	U.S.		14187317	2/23/2014
AliphCom	U.S.		14188602	2/24/2014
AliphCom	U.S.		14191284	2/26/2014
AliphCom	U.S.		14192432	2/27/2014
AliphCom	U.S.		14192463	2/27/2014
AliphCom	U.S.		14192610	2/27/2014
AliphCom	U.S.		14192620	2/27/2014
AliphCom	U.S.		14194424	2/28/2014
AliphCom	U.S.		14194495	2/28/2014
AliphCom	U.S.		14203464	3/10/2014
AliphCom	U.S.		14203467	3/10/2014
AliphCom	U.S.		14205138	3/11/2014
AliphCom	U.S.		14205151	3/11/2014
AliphCom	U.S.		14205215	3/11/2014
AliphCom	U.S.		14205263	3/11/2014

AliphCom	U.S.		14207183	3/12/2014
AliphCom	U.S.		14207203	3/12/2014
AliphCom	U.S.		14207221	3/12/2014
AliphCom	U.S.		14207235	3/12/2014
AliphCom	U.S.		14207243	3/12/2014
AliphCom	U.S.		14207263	3/12/2014
AliphCom	U.S.		14207420	3/12/2014
AliphCom	U.S.		14207429	3/12/2014
AliphCom	U.S.		14209329	3/13/2014
AliphCom	U.S.		14209690	3/13/2014
AliphCom	U.S.		14209959	3/13/2014
AliphCom	U.S.		14210201	3/13/2014
AliphCom	U.S.		14210234	3/13/2014
AliphCom	U.S.		14212832	3/14/2014
AliphCom	U.S.		14213439	3/14/2014
AliphCom	U.S.		14214065	3/14/2014
AliphCom	U.S.		14214086	3/14/2014
AliphCom	U.S.		14214254	3/14/2014
AliphCom	U.S.		14215038	3/16/2014
AliphCom	U.S.		14215047	3/16/2014
AliphCom	U.S.		14215051	3/16/2014
AliphCom	U.S.		14219648	3/19/2014
Aliphcom, Inc.	U.S.		14224868	3/25/2014
AliphCom	U.S.		14225339	3/25/2014
AliphCom	U.S.		14243747	4/2/2014
AliphCom	U.S.		14244677	4/3/2014
AliphCom	U.S.		14244759	4/3/2014
AliphCom	U.S.		14246971	4/7/2014
AliphCom	U.S.		14260221	4/23/2014
AliphCom	U.S.		14266697	4/30/2014
AliphCom	U.S.		14270242	5/5/2014
AliphCom	U.S.		14270249	5/5/2014

AliphCom	U.S.		14272464	5/7/2014
AliphCom	U.S.		14279253	5/15/2014
AliphCom	U.S.		14281856	5/19/2014
AliphCom	U.S.		14289617	5/28/2014
AliphCom	U.S.		14301220	6/10/2014
AliphCom	U.S.		14301227	6/10/2014
AliphCom	U.S.		14313895	6/24/2014
AliphCom	U.S.		14328665	7/10/2014
AliphCom	U.S.		14389766	9/30/2014
AliphCom	U.S.		14421815	2/13/2015
AliphCom	U.S.		14445051	7/28/2014
AliphCom	U.S.		14452496	8/5/2014
AliphCom	U.S.		14457051	8/11/2014
AliphCom	U.S.		14463556	8/19/2014
AliphCom	U.S.		14468327	8/25/2014
AliphCom, Inc.	U.S.	D0582398S	29299133	12/19/2007
AliphCom, Inc.	U.S.	D0584294S	29299134	12/19/2007
AliphCom, Inc.	U.S.	D0582898S	29299135	12/19/2007
AliphCom, Inc.	U.S.	D0585881S	29299139	12/19/2007
Aliphcom	U.S.	D0632674S	29353843	1/14/2010
Aliphcom	U.S.	D0632675S	29353844	1/14/2010
Aliphcom	U.S.	D0645026S	29353846	1/14/2010
Aliphcom	U.S.	D0632676S	29353847	1/14/2010

Aliphcom	U.S.	D0633480S	29354212	1/20/2010
Aliphcom	U.S.	D0648709S	29377627	10/22/2010
Aliphcom	U.S.	D0648726S	29377628	10/22/2010
Aliphcom	U.S.	D0645024S	29378325	11/2/2010
AliphCom	U.S.	D0655689S	29378327	11/2/2010
AliphCom	U.S.	D0652019S	29378328	11/2/2010
AliphCom	U.S.	D0652020S	29378329	11/2/2010
AliphCom	U.S.	D0641341S	29383495	1/18/2011
AliphCom	U.S.	D0664948S	29383712	1/20/2011
AliphCom	U.S.	D0664949S	29383714	1/20/2011
AliphCom	U.S.	D0653149S	29393916	6/10/2011
AliphCom	U.S.	D0695758S	29405617	11/3/2011
AliphCom	U.S.	D0696272S	29405623	11/3/2011
AliphCom	U.S.	D0695759S	29405625	11/3/2011
AliphCom	U.S.	D0695760S	29405626	11/3/2011
AliphCom	U.S.	D0695761S	29405627	11/3/2011
AliphCom	U.S.	D0696273S	29405628	11/3/2011
AliphCom	U.S.	D0696274S	29405630	11/3/2011

AliphCom	U.S.	D0695762S	29405631	11/3/2011
AliphCom	U.S.	D0699252S	29405633	11/3/2011
AliphCom	U.S.	D0695763S	29405634	11/3/2011
AliphCom	U.S.	D0696275S	29405635	11/3/2011
AliphCom	U.S.	D0695764S	29405636	11/3/2011
AliphCom	U.S.	D0695765S	29405637	11/3/2011
AliphCom	U.S.	D0695766S	29405638	11/3/2011
AliphCom	U.S.	D0695767S	29405639	11/3/2011
AliphCom	U.S.	D0695768S	29405640	11/3/2011
AliphCom	U.S.	D0695769S	29405641	11/3/2011
AliphCom	U.S.	D0695770S	29405642	11/3/2011
AliphCom	U.S.	D0695771S	29405643	11/3/2011
AliphCom	U.S.	D0695772S	29405644	11/3/2011
AliphCom	U.S.	D0695773S	29405645	11/3/2011
AliphCom	U.S.	D0696276S	29405646	11/3/2011
AliphCom	U.S.	D0678864S	29413571	2/16/2012
AliphCom	U.S.	D0678865S	29413572	2/16/2012

AliphCom	U.S.	D0678244S	29413573	2/16/2012
AliphCom	U.S.	D0698757S	29445283	2/8/2013
AliphCom	U.S.	D0698758S	29445286	2/8/2013
AliphCom	U.S.	D0698759S	29445287	2/8/2013
AliphCom	U.S.	D0710325S	29459899	7/3/2013
AliphCom	U.S.	D0713389S	29459900	7/3/2013
AliphCom	U.S.		62019327	6/30/2014
AliphCom	U.S.		62067428	10/22/2014
AliphCom	U.S.		62107411	1/25/2015
AliphCom	U.S.		14/121,355	8/22/2014
AliphCom	U.S.		14/121,463	9/8/2014
AliphCom	U.S.		14/121,465	9/8/2014
AliphCom	U.S.		14/121,938	11/4/2014
AliphCom	U.S.		14/121,939	11/4/2014
AliphCom	U.S.		14/121,940	11/4/2014
AliphCom	U.S.		14/121,941	11/4/2014
AliphCom	U.S.		14/121,942	11/4/2014
AliphCom	U.S.		14/121,943	11/4/2014
AliphCom	U.S.		14/121,944	11/4/2014
AliphCom	U.S.		14/121,947	11/4/2014
AliphCom	U.S.		14/121,948	11/4/2014
AliphCom	U.S.		14/313901	6/24/2014
AliphCom	U.S.		14/480,048	9/8/2014
AliphCom	U.S.		14/480,070	9/8/2014
AliphCom	U.S.		14/480,427	9/8/2014
AliphCom	U.S.		14/480,446	9/8/2014
AliphCom	U.S.		14/480,452	9/8/2014
AliphCom	U.S.		14/480,462	9/8/2014
AliphCom	U.S.		14/480,628	9/8/2014
AliphCom	U.S.		14/486,978	9/15/2014
AliphCom	U.S.		14/486,997	9/15/2014

AliphCom	U.S.		14/488,042	9/16/2014
AliphCom	U.S.		14/493,298	9/22/2014
AliphCom	U.S.		14/519,116	10/20/2014
AliphCom	U.S.		14/526,503	10/28/2014
AliphCom	U.S.		14/532,789	11/4/2014
AliphCom	U.S.		14/541,064	11/13/2014
AliphCom	U.S.		14/541,134	11/13/2014
AliphCom	U.S.		14/541,135	11/13/2014
AliphCom	U.S.		14/578,297	12/19/2014
AliphCom	U.S.		14/596,127	1/13/2015
AliphCom	U.S.		14/606,995	1/27/2015
AliphCom	U.S.		14/637,387	3/3/2015
AliphCom	U.S.		14/640,013	3/5/2015
AliphCom	U.S.		14/656,683	3/12/2015
AliphCom	U.S.		14/659,521	3/16/2015
BodyMedia, Inc.	U.S.	6,527,711	9419600	10/18/1999
BodyMedia, Inc.	U.S.	7,689,437	9595660	6/16/2000
BodyMedia, Inc.	U.S.	6605038B1	9602537	6/23/2000
BodyMedia, Inc.	U.S.		9620579	7/20/2000
BodyMedia, Inc.	U.S.	6595929B2	9822890	3/30/2001
BodyMedia, Inc.	U.S.	7261690B2	9923181	8/6/2001
BodyMedia, Inc.	U.S.	7020508B2	10227575	8/22/2002
Bodymedia, Inc.	U.S.	7153262B2	10313255	12/6/2002
BodyMedia	U.S.		10612894	7/7/2003
BodyMedia, Inc.	U.S.	8157731B2	10682293	10/9/2003
BodyMedia, Inc.	U.S.	7285090B2	10682759	10/9/2003
BodyMedia, Inc.	U.S.	8398546B2	10940214	9/13/2004
BodyMedia, Inc.	U.S.	7502643B2	10940889	9/13/2004
BodyMedia, Inc.	U.S.	8663106B2	11088002	3/22/2005

Bodymedia, Inc.	U.S.		11239748	9/30/2005
Bodymedia, Inc.	U.S.	8073707	11247049	10/11/2005
Bodymedia, Inc.	U.S.	8961413	11434949	5/16/2006
Bodymedia, Inc.	U.S.	8403845	11481147	7/5/2006
BodyMedia, Inc.	U.S.		11582896	10/17/2006
Bodymedia, Inc.	U.S.	8961414B2	11724373	3/15/2007
Bodymedia, Inc.	U.S.	7,959,567	11876623	10/22/2007
Bodymedia, Inc.	U.S.		11925906	10/27/2007
BodyMedia, Inc.	U.S.	8708904B2	11925965	10/28/2007
Bodymedia, Inc.	U.S.		11928039	10/30/2007
Bodymedia, Inc.	U.S.		11930036	10/30/2007
Bodymedia, Inc.	U.S.		11930053	10/30/2007
Bodymedia, Inc.	U.S.		11930081	10/30/2007
Bodymedia, Inc.	U.S.	8641612B2	11930091	10/31/2007
Bodymedia, Inc.	U.S.	8,968,196	11930092	10/31/2007
Bodymedia, Inc.	U.S.	8852098B2	11930094	10/31/2007

BodyMedia, Inc.	U.S.		12033722	2/19/2008
BodyMedia, Inc.	U.S.		12033731	2/19/2008
BodyMedia, Inc.	U.S.		12033741	2/19/2008
BodyMedia, Inc.	U.S.		12033746	2/19/2008
BodyMedia, Inc.	U.S.		12033751	2/19/2008
BodyMedia, Inc.	U.S.	8382590B2	12033753	2/19/2008
BodyMedia, Inc.	U.S.	8275635B2	12033760	2/19/2008
BodyMedia, Inc.	U.S.		12033766	2/19/2008
BodyMedia	U.S.		12352911	1/13/2009
BodyMedia, Inc.	U.S.	8369936B2	12840109	7/20/2010
BodyMedia, Inc. Virginia Commonwealth University	U.S.		13130282	6/18/2012
Bodymedia, Inc.	U.S.	8870766	13291879	11/8/2011
Bodymedia, Inc.	U.S.		13291982	11/8/2011
BodyMedia, Inc.	U.S.		13734433	1/4/2013
BodyMedia, Inc.	U.S.		13761409	2/7/2013
BODYMEDIA, INC.	U.S.		13761557	2/7/2013

BodyMedia, Inc.	U.S.		14058485	10/21/2013
BodyMedia, Inc.	U.S.		14058493	10/21/2013
BodyMedia, Inc.	U.S.	8979763	14058501	10/21/2013
BodyMedia, Inc.	U.S.		14058563	10/21/2013
BodyMedia, Inc.	U.S.		14059054	10/21/2013
BodyMedia, Inc.	U.S.		14059072	10/21/2013
BodyMedia, Inc.	U.S.		14059117	10/21/2013
BODYMEDIA, INC.	U.S.		14060004	10/22/2013
BodyMedia, Inc.	U.S.		14060010	10/22/2013
BodyMedia, Inc.	U.S.		14060029	10/22/2013
BodyMedia, Inc.	U.S.		14060047	10/22/2013
BodyMedia, Inc.	U.S.		14060072	10/22/2013
BodyMedia, Inc.	U.S.		14060082	10/22/2013
BodyMedia, Inc.	U.S.		14060092	10/22/2013
BODYMEDIA, INC.	U.S.		14060122	10/22/2013
BodyMedia, Inc.	U.S.		14081369	11/15/2013
BodyMedia, Inc.	U.S.		14081406	11/15/2013
BodyMedia, Inc.	U.S.		14081880	11/15/2013
BodyMedia, Inc.	U.S.		14081889	11/15/2013
BodyMedia, Inc.	U.S.		14081901	11/15/2013
BodyMedia, Inc.	U.S.		14081928	11/15/2013
BodyMedia, Inc.	U.S.		14081935	11/15/2013
BodyMedia, Inc.	U.S.		14081942	11/15/2013
BodyMedia, Inc.	U.S.		14081951	11/15/2013
BodyMedia, Inc.	U.S.		14081956	11/15/2013
BodyMedia, Inc.	U.S.		14081967	11/15/2013
BodyMedia, Inc.	U.S.		14081972	11/15/2013
BodyMedia, Inc.	U.S.		14081979	11/15/2013
BodyMedia, Inc.	U.S.		14082070	11/15/2013
BodyMedia, Inc.	U.S.		14082176	11/17/2013
BodyMedia, Inc.	U.S.		14082178	11/17/2013
BodyMedia, Inc.	U.S.		14082179	11/17/2013
BODYMEDIA, INC.	U.S.		14082180	11/17/2013
BodyMedia, Inc.	U.S.		14082183	11/17/2013
BODYMEDIA, INC.	U.S.		14082185	11/17/2013
BodyMedia, Inc.	U.S.		14082186	11/17/2013
BodyMedia, Inc.	U.S.		14082188	11/17/2013
BodyMedia, Inc.	U.S.		14082189	11/17/2013
BodyMedia, Inc.	U.S.		14082190	11/17/2013
BodyMedia, Inc.	U.S.		14082192	11/17/2013
BodyMedia, Inc.	U.S.		14083372	11/18/2013

BodyMedia, Inc.	U.S.		14083382	11/18/2013
BodyMedia, Inc.	U.S.		14083389	11/18/2013
BodyMedia, Inc.	U.S.		14083397	11/18/2013
BodyMedia, Inc.	U.S.		14083401	11/18/2013
BodyMedia, Inc.	U.S.		14083404	11/18/2013
BodyMedia, Inc.	U.S.		14083407	11/18/2013
BodyMedia, Inc.	U.S.		14133607	12/18/2013
BodyMedia, Inc.	U.S.		14133610	12/18/2013
BodyMedia, Inc.	U.S.		14133612	12/18/2013
BodyMedia, Inc.	U.S.		14133615	12/18/2013
BodyMedia, Inc.	U.S.		14133619	12/18/2013
BodyMedia, Inc.	U.S.		14133620	12/18/2013
BodyMedia, Inc.	U.S.		14133622	12/18/2013
BodyMedia, Inc.	U.S.		14133625	12/18/2013
BodyMedia, Inc.	U.S.		14133626	12/18/2013
BodyMedia, Inc.	U.S.		14133634	12/18/2013
BodyMedia, Inc.	U.S.		14133638	12/19/2013
BodyMedia, Inc.	U.S.		14133640	12/19/2013
BodyMedia, Inc.	U.S.		14133641	12/19/2013
BodyMedia, Inc.	U.S.		14136750	12/20/2013
BodyMedia, Inc.	U.S.		14137027	12/20/2013
BodyMedia, Inc.	U.S.		14137087	12/20/2013
BodyMedia, Inc.	U.S.		14137126	12/20/2013
BodyMedia, Inc.	U.S.		14137233	12/20/2013
BodyMedia, Inc.	U.S.		14138030	12/21/2013
BodyMedia, Inc.	U.S.		14138033	12/21/2013
BodyMedia, Inc.	U.S.		14138042	12/21/2013
BodyMedia, Inc.	U.S.		14138043	12/21/2013
BodyMedia, Inc.	U.S.		14138046	12/21/2013
BodyMedia, Inc.	U.S.		14139871	12/24/2013
BodyMedia, Inc.	U.S.		14139872	12/24/2013
BodyMedia, Inc.	U.S.		14139873	12/24/2013
Bodymedia, Inc.	U.S.		14139875	12/24/2013
BodyMedia, Inc.	U.S.		14221506	3/21/2014
BODYMEDIA, INC.	U.S.		14248576	4/9/2014
BodyMedia, Inc.	U.S.		14248776	4/9/2014
BodyMedia	U.S.		14248830	4/9/2014
BodyMedia	U.S.		14248853	4/9/2014
BodyMedia	U.S.		14248885	4/9/2014
BodyMedia, Inc.	U.S.		14249135	4/9/2014

BodyMedia, Inc.	U.S.		14249211	4/9/2014
BodyMedia	U.S.		14249235	4/9/2014
BodyMedia, Inc.	U.S.		14249262	4/9/2014
BodyMedia, Inc.	U.S.		14249290	4/9/2014
BodyMedia, Inc.	U.S.		14249314	4/9/2014
BodyMedia	U.S.		14249318	4/9/2014
BodyMedia	U.S.		14249328	4/9/2014
BodyMedia	U.S.		14252090	4/14/2014
BodyMedia	U.S.		14284947	5/22/2014
BodyMedia	U.S.		14285018	5/22/2014
BodyMedia	U.S.		14285036	5/22/2014
BodyMedia	U.S.		14285092	5/22/2014
BodyMedia, Inc.	U.S.		14285159	5/22/2014
BodyMedia, Inc.	U.S.		14285194	5/22/2014
BodyMedia	U.S.		14285232	5/22/2014
BodyMedia, Inc.	U.S.		14292105	5/30/2014
BodyMedia, Inc.	U.S.		14292368	5/30/2014
BodyMedia, Inc.	U.S.		14292735	5/30/2014
BodyMedia	U.S.		14292831	5/31/2014
BodyMedia	U.S.		14292833	5/31/2014
BodyMedia	U.S.		14336413	7/21/2014
BodyMedia	U.S.		14336448	7/21/2014
BodyMedia	U.S.		14336539	7/21/2014
BodyMedia	U.S.		14336571	7/21/2014
BodyMedia	U.S.		14336598	7/21/2014
BodyMedia	U.S.		14336625	7/21/2014
BodyMedia, Inc.	U.S.	D0439981S	29127587	8/9/2000
BodyMedia, Inc.	U.S.	D0451604S	29129931	9/25/2000
BodyMedia, Inc.	U.S.	D0460971S	29143975	6/21/2001
BodyMedia, Inc.	U.S.	D632396	29256362	3/20/2006
BodyMedia, Inc.	U.S.	D631552	29256753	3/24/2006

BodyMedia, Inc.	U.S.	D0645968S	29383860	1/24/2011
BodyMedia, Inc.	U.S.	D0698028S	29434003	10/9/2012
BodyMedia	U.S.		14/509,034	10/7/2014
BodyMedia	U.S.		14/526,499	10/28/2014
BodyMedia	U.S.		14/630,618	2/24/2015
BodyMedia	U.S.		14/630,618	2/24/2015
BodyMedia	U.S.		14/636,157	3/2/2015
BodyMedia	U.S.		14/636,158	3/2/2015
BodyMedia, Inc.	U.S.		95/002,354	9/14/2012
BodyMedia, Inc.	U.S.		95/002,360	9/14/2012
BodyMedia, Inc.	U.S.		95/002,366	9/14/2012
BodyMedia, Inc.	U.S.		95/002,367	9/14/2012
BodyMedia, Inc.	U.S.		95/002,371	9/14/2014
Bodymedia, Inc.	U.S.		95/002,376	9/14/2012
BodyMedia, Inc.	U.S.		95/002,382	9/14/2012
Project Paris Acquisition LLC	U.S.		14039258	9/27/2013
University of Maryland, College park Office of Technology Commercialization	U.S.	6,399,306	9622910	9/5/2000
University of Maryland, College park Office of Technology Commercialization	U.S.	6743587	9986989	11/13/2001
	U.S.		29445284	2/8/2013

	U.S.		29466527	9/9/2013
	U.S.		29466531	9/9/2013
	U.S.		29466534	9/9/2013
	U.S.		29466536	
	U.S.		29466539	
	U.S.		29470963	10/25/2013
	U.S.		29470964	10/25/2013
	U.S.		29470965	10/25/2013
	U.S.		29470966	
	U.S.		29470967	
	U.S.		29470968	
	U.S.		29477005	
	U.S.		29477006	
	U.S.		29/478,533	1/6/2014
	U.S.		29/479,052	1/10/2014
	U.S.		29/479,055	1/10/2014
	U.S.		29/479,058	1/10/2014
	U.S.		29/479,060	1/10/2014
	U.S.		29/479,064	1/10/2014
	U.S.		29/479,066	1/10/2014
	U.S.		29/479,069	1/10/2014
	U.S.		29/479,071	1/10/2014
	U.S.		29/479,074	1/10/2014
	U.S.		29/479,077	1/10/2014
	U.S.		29/479,078	1/10/2014
	U.S.		29/479,079	1/10/2014
	U.S.		29/482,849	2/21/2014
	U.S.		29/482,850	2/21/2014
	U.S.		29/482,851	2/21/2014
	U.S.		29/482,852	2/21/2014
	U.S.		29/482,854	2/21/2014
	U.S.		29/482,855	2/21/2014
	U.S.		29/482,856	2/21/2014
	U.S.		29/485,103	3/14/2014
	U.S.		29/485,118	3/16/2014
	U.S.		29/495,368	6/30/2014
	U.S.		29/495,369	6/30/2014
	U.S.		29/495,373	6/30/2014
	U.S.		29/495,376	6/30/2014
	U.S.		29/495,380	6/30/2014
	U.S.		29/495,384	6/30/2014

	U.S.		29/495,387	6/30/2014
	U.S.		29/495,389	6/30/2014
	U.S.		29/495,390	6/30/2014
	U.S.		29/495,394	6/30/2014
	U.S.		29/495,395	6/30/2014
	U.S.		29/495,397	6/30/2014
	U.S.		29/495,399	6/30/2014
	U.S.		29/495,400	6/30/2014
	U.S.		29/495,404	6/30/2014
	U.S.		29/495,405	6/30/2014
	U.S.		29/495,406	6/30/2014
	U.S.		29/495,407	6/30/2014
	U.S.		29/495,669	7/2/2014
	U.S.		29/495,670	7/2/2014
	U.S.		29/495,674	7/2/2014
	U.S.		29/508,180	11/4/2014
	U.S.		29/508,184	11/4/2014
	U.S.		29/508,185	11/4/2014
	U.S.		29/508,187	11/4/2014
	U.S.		29/508,193	11/4/2014
	U.S.		29/508,196	11/4/2014
	U.S.		29/508,200	11/4/2014
	U.S.		29/508,205	11/4/2014
	U.S.		29/508,207	11/4/2014
	U.S.		29/516,012	1/28/2015
	U.S.		29/516,014	1/28/2015
	U.S.		29/516,015	1/28/2015
	U.S.		29/516,016	1/28/2015
	U.S.		29/516,017	1/28/2015
	U.S.		29/517,054	2/9/2015
	U.S.		29/517,056	2/9/2015

Patent License

Small Entity Declaration

ASSERTION OF SMALL ENTITY STATUS
PURSUANT TO 37 C.F.R. §1.27 (c)(1)

Commissioner for Patents
Mail Stop M Correspondence
P.O. Box 1450
Alexandria, VA 22313-1450

Sir:

This communication hereby asserts that the above-identified patents are entitled to small entity status.

COMPANY or FIRM NAME AND ADDRESS:

JAWB Acquisition LLC
321 West 44th Street
New York, NY 10036

Respectfully submitted,

Luke Conticello

Signature

Luke Conticello

Printed Name

Assignee

Title

Reg. # if US Attorney_____

AO 120 (Rev. 08/10)

TO: Mail Stop 8 Director of the U.S. Patent and Trademark Office P.O. Box 1450 Alexandria, VA 22313-1450	**REPORT ON THE FILING OR DETERMINATION OF AN ACTION REGARDING A PATENT OR TRADEMARK**

In Compliance with 35 U.S.C. § 290 and/or 15 U.S.C. § 1116 you are hereby advised that a court action has been filed in the U.S. District Court Western District of Texas - Waco Division on the following

☐ Trademarks or ☒ Patents. (☐ the patent action involves 35 U.S.C. § 292.):

DOCKET NO.	DATE FILED	U.S. DISTRICT COURT
6:21-cv-00984	September 23, 2021	Western District of Texas - Waco Division

PLAINTIFF	DEFENDANT
Jawbone Innovations, LLC	Apple Inc.

PATENT OR TRADEMARK NO.	DATE OF PATENT OR TRADEMARK	HOLDER OF PATENT OR TRADEMARK
1 8,019,091	2/8/2005	Jawbone Innovations, LLC
2 7,246,058	7/17/2007	Jawbone Innovations, LLC
3 8,280,072	10/2/2012	Jawbone Innovations, LLC
4 8,321,213	11/27/2012	Jawbone Innovations, LLC
5 8,326,611	12/4/2012	Jawbone Innovations, LLC

In the above—entitled case, the following patent(s)/ trademark(s) have been included:

DATE INCLUDED	INCLUDED BY ☐ Amendment ☐ Answer ☐ Cross Bill ☐ Other Pleading	
PATENT OR TRADEMARK NO.	DATE OF PATENT OR TRADEMARK	HOLDER OF PATENT OR TRADEMARK
1		
2		
3		
4		
5		

In the above—entitled case, the following decision has been rendered or judgement issued:

DECISION/JUDGEMENT

CLERK	(BY) DEPUTY CLERK	DATE

Copy 1—Upon initiation of action, mail this copy to Director Copy 3—Upon termination of action, mail this copy to Director
Copy 2—Upon filing document adding patent(s), mail this copy to Director Copy 4—Case file copy

AO 120 (Rev. 08/10)

TO: Mail Stop 8 Director of the U.S. Patent and Trademark Office P.O. Box 1450 Alexandria, VA 22313-1450	**REPORT ON THE FILING OR DETERMINATION OF AN ACTION REGARDING A PATENT OR TRADEMARK**

In Compliance with 35 U.S.C. § 290 and/or 15 U.S.C. § 1116 you are hereby advised that a court action has been filed in the U.S. District Court Western District of Texas - Waco Division on the following

☐ Trademarks or ☒ Patents. (☐ the patent action involves 35 U.S.C. § 292.):

DOCKET NO.	DATE FILED	U.S. DISTRICT COURT
6:21-cv-00984	September 23, 2021	Western District of Texas - Waco Division

PLAINTIFF	DEFENDANT
Jawbone Innovations, LLC	Apple Inc.

PATENT OR TRADEMARK NO.	DATE OF PATENT OR TRADEMARK	HOLDER OF PATENT OR TRADEMARK
1 10,799,080	9/15/2020	Jawbone Innovations, LLC
2 11,122,357	9/14/2021	Jawbone Innovations, LLC
3 8,467,543	6/18/2014	Jawbone Innovations, LLC
4		
5		

In the above—entitled case, the following patent(s)/ trademark(s) have been included:

DATE INCLUDED	INCLUDED BY ☐ Amendment ☐ Answer ☐ Cross Bill ☐ Other Pleading	
PATENT OR TRADEMARK NO.	DATE OF PATENT OR TRADEMARK	HOLDER OF PATENT OR TRADEMARK
1		
2		
3		
4		
5		

In the above—entitled case, the following decision has been rendered or judgement issued:

DECISION/JUDGEMENT

CLERK	(BY) DEPUTY CLERK	DATE

Copy 1—Upon initiation of action, mail this copy to Director Copy 3—Upon termination of action, mail this copy to Director
Copy 2—Upon filing document adding patent(s), mail this copy to Director Copy 4—Case file copy

AO 120 (Rev. 08/10)

TO: Mail Stop 8 Director of the U.S. Patent and Trademark Office P.O. Box 1450 Alexandria, VA 22313-1450	**REPORT ON THE FILING OR DETERMINATION OF AN ACTION REGARDING A PATENT OR TRADEMARK**

In Compliance with 35 U.S.C. § 290 and/or 15 U.S.C. § 1116 you are hereby advised that a court action has been filed in the U.S. District Court Western District of Texas - Waco Division on the following

☐ Trademarks or ☒ Patents. (☐ the patent action involves 35 U.S.C. § 292.):

DOCKET NO.	DATE FILED	U.S. DISTRICT COURT
6:21-cv-00985	September 23, 2021	Western District of Texas - Waco Division

PLAINTIFF	DEFENDANT
Jawbone Innovations, LLC	Google LLC

PATENT OR TRADEMARK NO.	DATE OF PATENT OR TRADEMARK	HOLDER OF PATENT OR TRADEMARK
1 8,019,091	2/8/2005	Jawbone Innovations, LLC
2 7,246,058	7/17/2007	Jawbone Innovations, LLC
3 8,280,072	10/2/2012	Jawbone Innovations, LLC
4 8,321,213	11/27/2012	Jawbone Innovations, LLC
5 8,326,611	12/4/2012	Jawbone Innovations, LLC

In the above—entitled case, the following patent(s)/ trademark(s) have been included:

DATE INCLUDED	INCLUDED BY ☐ Amendment ☐ Answer ☐ Cross Bill ☐ Other Pleading	
PATENT OR TRADEMARK NO.	DATE OF PATENT OR TRADEMARK	HOLDER OF PATENT OR TRADEMARK
1		
2		
3		
4		
5		

In the above—entitled case, the following decision has been rendered or judgement issued:

DECISION/JUDGEMENT

CLERK	(BY) DEPUTY CLERK	DATE

Copy 1—Upon initiation of action, mail this copy to Director Copy 3—Upon termination of action, mail this copy to Director
Copy 2—Upon filing document adding patent(s), mail this copy to Director Copy 4—Case file copy

AO 120 (Rev. 08/10)

TO:	REPORT ON THE FILING OR DETERMINATION OF AN ACTION REGARDING A PATENT OR TRADEMARK
Mail Stop 8 **Director of the U.S. Patent and Trademark Office** **P.O. Box 1450** **Alexandria, VA 22313-1450**	

In Compliance with 35 U.S.C. § 290 and/or 15 U.S.C. § 1116 you are hereby advised that a court action has been filed in the U.S. District Court Western District of Texas - Waco Division on the following

☐ Trademarks or ☒ Patents. (☐ the patent action involves 35 U.S.C. § 292.):

DOCKET NO.	DATE FILED	U.S. DISTRICT COURT
6:21-cv-00985	September 23, 2021	Western District of Texas - Waco Division

PLAINTIFF	DEFENDANT
Jawbone Innovations, LLC	Google LLC

PATENT OR TRADEMARK NO.	DATE OF PATENT OR TRADEMARK	HOLDER OF PATENT OR TRADEMARK
1 10,799,080	9/15/2020	Jawbone Innovations, LLC
2 11,122,357	9/14/2021	Jawbone Innovations, LLC
3 8,467,543	6/18/2014	Jawbone Innovations, LLC
4		
5		

In the above—entitled case, the following patent(s)/ trademark(s) have been included:

DATE INCLUDED	INCLUDED BY ☐ Amendment ☐ Answer ☐ Cross Bill ☐ Other Pleading	
PATENT OR TRADEMARK NO.	DATE OF PATENT OR TRADEMARK	HOLDER OF PATENT OR TRADEMARK
1		
2		
3		
4		
5		

In the above—entitled case, the following decision has been rendered or judgement issued:

DECISION/JUDGEMENT

CLERK	(BY) DEPUTY CLERK	DATE

Copy 1—Upon initiation of action, mail this copy to Director **Copy 3—Upon termination of action, mail this copy to Director**
Copy 2—Upon filing document adding patent(s), mail this copy to Director **Copy 4—Case file copy**

AO 120 (Rev. 08/10)

TO: Mail Stop 8 Director of the U.S. Patent and Trademark Office P.O. Box 1450 Alexandria, VA 22313-1450	REPORT ON THE FILING OR DETERMINATION OF AN ACTION REGARDING A PATENT OR TRADEMARK

In Compliance with 35 U.S.C. § 290 and/or 15 U.S.C. § 1116 you are hereby advised that a court action has been filed in the U.S. District Court for the Eastern District of Texas, Marshall Division on the following

☐ Trademarks or ☒ Patents. (☐ the patent action involves 35 U.S.C. § 292.):

DOCKET NO.	DATE FILED	U.S. DISTRICT COURT
2:21-cv-00435	11/29/2021	for the Eastern District of Texas, Marshall Division

PLAINTIFF	DEFENDANT
Jawbone Innovations, LLC	Amazon.com, Inc. and Amazon.com Services, Inc.

	PATENT OR TRADEMARK NO.	DATE OF PATENT OR TRADEMARK	HOLDER OF PATENT OR TRADEMARK
1	8,019,091	9/13/2011	Jawbone Innovations, LLC
2	7,246,058	7/17/2007	Jawbone Innovations, LLC
3	8,280,072	10/2/2012	Jawbone Innovations, LLC
4	8,321,213	11/17/2012	Jawbone Innovations, LLC
5	8,326,611	12/4/2012	Jawbone Innovations, LLC

In the above—entitled case, the following patent(s)/ trademark(s) have been included:

DATE INCLUDED	INCLUDED BY ☐ Amendment ☐ Answer ☐ Cross Bill ☐ Other Pleading	
PATENT OR TRADEMARK NO.	DATE OF PATENT OR TRADEMARK	HOLDER OF PATENT OR TRADEMARK
1		
2		
3		
4		
5		

In the above—entitled case, the following decision has been rendered or judgement issued:

DECISION/JUDGEMENT

CLERK	(BY) DEPUTY CLERK	DATE

Copy 1—Upon initiation of action, mail this copy to Director **Copy 3—Upon termination of action, mail this copy to Director**
Copy 2—Upon filing document adding patent(s), mail this copy to Director **Copy 4—Case file copy**

AO 120 (Rev. 08/10)

TO: Mail Stop 8 Director of the U.S. Patent and Trademark Office P.O. Box 1450 Alexandria, VA 22313-1450	**REPORT ON THE FILING OR DETERMINATION OF AN ACTION REGARDING A PATENT OR TRADEMARK**

In Compliance with 35 U.S.C. § 290 and/or 15 U.S.C. § 1116 you are hereby advised that a court action has been filed in the U.S. District Court for the Eastern District of Texas, Marshall Division on the following

☐ Trademarks or ☑ Patents. (☐ the patent action involves 35 U.S.C. § 292.):

DOCKET NO.	DATE FILED	U.S. DISTRICT COURT
2:21-cv-00435	11/29/2021	for the Eastern District of Texas, Marshall Division

PLAINTIFF	DEFENDANT
Jawbone Innovations, LLC	Amazon.com, Inc. and Amazon.com Services, Inc.

	PATENT OR TRADEMARK NO.	DATE OF PATENT OR TRADEMARK	HOLDER OF PATENT OR TRADEMARK
1	10,779,080	9/15/2020	Jawbone Innovations, LLC
2	11,122,357	9/14/2021	Jawbone Innovations, LLC
3	8,467,543	6/18/2013	Jawbone Innovations, LLC
4			
5			

In the above—entitled case, the following patent(s)/ trademark(s) have been included:

DATE INCLUDED	INCLUDED BY ☐ Amendment ☐ Answer ☐ Cross Bill ☐ Other Pleading	
PATENT OR TRADEMARK NO.	DATE OF PATENT OR TRADEMARK	HOLDER OF PATENT OR TRADEMARK
1		
2		
3		
4		
5		

In the above—entitled case, the following decision has been rendered or judgement issued:

DECISION/JUDGEMENT

CLERK	(BY) DEPUTY CLERK	DATE

Copy 1—Upon initiation of action, mail this copy to Director **Copy 3—Upon termination of action, mail this copy to Director**
Copy 2—Upon filing document adding patent(s), mail this copy to Director **Copy 4—Case file copy**