Trials@uspto.gov
Tel: 571-272-7822

Paper 13
Date: January 9, 2024

UNITED STATES PATENT AND TRADEMARK OFFICE

BEFORE THE PATENT TRIAL AND APPEAL BOARD

META PLATFORMS, INC.,
Petitioner,

v.

JAWBONE INNOVATIONS, LLC,
Patent Owner.

IPR2023-01129
Patent 8,326,611 B2

Before GEORGIANNA W. BRADEN, NORMAN H. BEAMER, and SHEILA F. McSHANE, *Administrative Patent Judges*.

McSHANE, *Administrative Patent Judge*.

DECISION
Denying Institution of *Inter Partes* Review
35 U.S.C. § 314
Granting Petitioner's Unopposed Motion to Withdraw Joinder Motion
35 U.S.C. § 315(c); 37 C.F.R. § 42.122

I. INTRODUCTION

Meta Platforms, Inc. ("Petitioner")[1] filed a Petition requesting an *inter partes* review of claims 29 and 31–44 in U.S. Patent No. 8,326,611 B2 (Ex. 1001, "the '611 patent") under 35 U.S.C. §§ 311–319, with the supporting declaration of Dr. Thomas W. Kenny. Paper 1 ("Pet."); Ex. 1003. Jawbone Innovations, LLC ("Patent Owner")[2] filed a Preliminary Response. Paper 10 ("Prelim. Resp."). With our authorization, Petitioner filed a Reply to Patent Owner's Preliminary Response (Paper 11, "Prelim. Reply"), and Patent Owner filed a Sur-Reply to Petitioner's Reply (Paper 12, "Prelim. Sur-Reply").

Concurrently with the Petition, Petitioner filed a Motion for Joinder seeking joinder as a party in *Amazon.com, Inc. v. Jawbone Innovations, LLC*, IPR2023-00285 ("the Amazon IPR") and consolidation with the Amazon IPR. Paper 2. Petitioner subsequently filed an Unopposed Motion to Withdraw the Motion for Joinder. Paper 9.

Institution of an *inter partes* review is authorized by statute when "the information presented in the petition . . . and any response . . . shows that there is a reasonable likelihood that the petitioner would prevail with respect to at least 1 of the claims challenged in the petition." 35 U.S.C. § 314(a) (2018). Upon consideration of the Petition, the Preliminary Response, the Reply, the Sur-Reply, and the evidence of record, and for the reasons explained below, we determine Petitioner has not shown that there is a

---

[1] Petitioner identifies itself, Meta Platforms, Inc., as the real party-in-interest. Pet. 93.

[2] Patent Owner identifies itself, Jawbone Innovations, LLC, as the real party-in-interest. Paper 7, 2.

reasonable likelihood that it would prevail with respect to at least one of the challenged claims. Thus, we deny institution of an *inter partes* review of claims 29 and 31–44 in the ’611 patent on all challenges included in the Petition.

Additionally, as discussed below, we grant Petitioner’s Motion to Withdraw the Motion for Joinder.

II. BACKGROUND

A. Related Matters

Petitioner and Patent Owner identify the following civil actions as related matters involving the ’611 patent:

- *Jawbone Innovations, LLC v. Apple Inc.*, No. 6:21-cv-00984 (W.D. Tex. filed Sept. 23, 2021);
- *Jawbone Innovations, LLC v. Google LLC*, No. 6:21-cv-00985 (W.D. Tex. filed Sept. 23, 2021);
- *Jawbone Innovations, LLC v. Amazon.com, Inc.*, No. 2:21-cv-00435 (E.D. Tex. filed Nov. 29, 2021);
- *Jawbone Innovations, LLC v. Amazon.com, Inc.*, No. 3:22-cv-06727 (N.D. Cal. filed Nov. 1, 2022);
- *Jawbone Innovations, LLC v. Google LLC*, No. 3:23-cv-00466 (N.D. Cal. filed Feb. 1, 2023);
- *Jawbone Innovations, LLC v. HTC Corp.*, No. 2:23-cv-00077 (E.D. Tex. filed Feb. 28, 2023);
- *Jawbone Innovations, LLC v. LG Electronics, Inc.*, No. 2:23-cv-00078 (E.D. Tex. filed Feb. 28, 2023);
- *Jawbone Innovations, LLC v. Guandong Oppo Mobile Telecom. Corp.*, No. 2:23-cv-00079 (E.D. Tex. filed Feb. 28, 2023);
- *Jawbone Innovations, LLC v. Panasonic Holdings Corp.*, No. 2:23-cv-00081 (E.D. Tex. filed Feb. 28, 2023);

- *Jawbone Innovations, LLC v. ZTE Corp.*, No. 2:23-cv-00082 (E.D. Tex. filed Feb. 28, 2023);
- *Jawbone Innovations, LLC v. Meta Platforms, Inc.*, No. 6:23-cv-00158 (W.D. Tex. filed Feb. 28, 2023); and
- *Jawbone Innovations, LLC v. Sony Elec., Inc.*, No. 2:23-cv-01161 (D.N.J. filed Feb. 28, 2023).

Pet. 94–95; Paper 7, 3.

Petitioner and Patent Owner identify the following Board proceedings as related matters involving the ’611 patent:

- *Google LLC v. Jawbone Innovations, LLC*, IPR2022-00604 (PTAB filed Feb. 22, 2022);
- *Google LLC v. Jawbone Innovations, LLC*, IPR2022-00889 (PTAB filed May 16, 2022);
- *Apple Inc. v. Jawbone Innovations, LLC*, IPR2022-01085 (PTAB filed June 3, 2022);
- *Apple Inc. v. Jawbone Innovations, LLC*, IPR2022-01495 (PTAB filed Sept. 2, 2022);
- *Amazon.com, Inc. v. Jawbone Innovations, LLC*, IPR2023-00285 (PTAB filed Nov. 28, 2022);
- *Amazon.com, Inc. v. Jawbone Innovations, LLC*, IPR2023-00286 (PTAB filed Nov. 28, 2022);
- *Meta Platforms, Inc. v. Jawbone Innovations, LLC*, IPR2023-01128 (PTAB filed June 27, 2023);
- *Google LLC v. Jawbone Innovations, LLC*, IPR2023-01131 (PTAB filed July, 7, 2023);
- *Google LLC v. Jawbone Innovations, LLC*, IPR2023-01132 (PTAB filed July, 7, 2023);
- *LG Electronics Inc. v. Jawbone Innovations, LLC*, IPR2023-01155 (PTAB filed July, 6, 2023);

- *LG Electronics Inc. v. Jawbone Innovations, LLC*, IPR2023-01156 (PTAB filed July, 6, 2023);
- *Sony Electronics Inc. v. Jawbone Innovations, LLC*, IPR2023-01176 (PTAB filed July, 6, 2023); and
- *Sony Electronics Inc. v. Jawbone Innovations, LLC*, IPR2023-01177 (PTAB filed July, 6, 2023).

Pet. 94; Paper 7, 2.

B. The '611 Patent (Ex. 1001)

The '611 patent, titled "Acoustic Voice Activity Detection (AVAD) for Electronic Systems," issued on December 4, 2012, from an application filed on October 26, 2009. Ex. 1001, codes (22), (45), (54). The patent identifies that application as a continuation-in-part of the following applications: (1) U.S. Patent Application No. 11/805,987, filed on May 25, 2007; and (2) U.S. Patent Application No. 12/139,333, filed on June 13, 2008. *Id.* at 1:8–11, code (63). The patent claims priority to U.S. Provisional Patent Application No. 61/108,426, filed on October 24, 2008. *Id.* at 1:6–7, code (60). The patent states that the disclosure "relates generally to noise suppression" and, more particularly, "to noise suppression systems, devices, and methods for use in acoustic applications." *Id.* at 1:16–19; *see id.* at code (57).

The '611 patent explains that the "ability to correctly identify voiced and unvoiced speech is critical to many speech applications including speech recognition, speaker verification, noise suppression, and many others." Ex. 1001, 1:23–26. In "the speaker's environment," however, "there may exist one or more noise sources that pollute the speech signal, the signal of

interest, with unwanted acoustic noise." *Id.* at 1:28–31. The unwanted acoustic noise "makes it difficult or impossible for the receiver, whether human or machine, to understand the user's speech." *Id.* at 1:31–32.

The '611 patent explains that "[t]ypical methods for classifying voiced and unvoiced speech have relied mainly on the acoustic content of single microphone data, which is plagued by problems with noise and the corresponding uncertainties in signal content." Ex. 1001, 1:33–36. According to the patent, non-acoustic methods "have been employed successfully in commercial products," but "an acoustic-only solution is desired in some cases (e.g., for reduced cost, as a supplement to the non-acoustic sensor, etc.)." *Id.* at 1:41–46.

The '611 patent discloses "Acoustic Voice Activity Detection (AVAD) methods and systems" that use physical microphones "to generate virtual directional microphones which have very similar noise responses and very dissimilar speech responses." Ex. 1001, 3:57–62, code (57); *see id.* at 4:21–25, 5:35–52, 17:43–45. "The ratio of the energies of the virtual microphones is then calculated over a given window size and the ratio can then be used with a variety of methods to generate a VAD signal." *Id.* at 3:62–65, code (57). "The virtual microphones can be constructed using either a fixed or an adaptive filter." *Id.* at 3:65–66, code (57); *see id.* at 4:27–30.

The '611 patent defines various terms. Ex. 1001, 17:57–18:32. The patent includes the following definitions:

- The term "speech" means desired speech of the user.
- The term "noise" means unwanted environmental acoustic noise.

- The term "O_1" means a first physical omnidirectional microphone used to form a microphone array.
- The term "O_2" means a second physical omnidirectional microphone used to form a microphone array.
- The term "virtual microphones (VM)" or "virtual directional microphones" means a microphone constructed using two or more omnidirectional microphones and associated signal processing.
- The term "V_1" means the virtual directional "speech" microphone, which has no nulls.
- The term "V_2" means the virtual directional "noise" microphone, which has a null for the user's speech.

Id. at 18:10–32.

The '611 patent explains that "V_2 is configured in such a way that it has minimal response to the speech of the user" and "V_1 is configured so that it does respond to the user's speech but has a very similar noise magnitude response to V_2." Ex. 1001, 4:21–25. "A further refinement is the use of an adaptive filter to further minimize the speech response of V_2." *Id.* at 4:27–28; *see id.* at 6:10–11.

The '611 patent's Figure 3 (reproduced below) depicts a block diagram of a virtual microphone V_2:

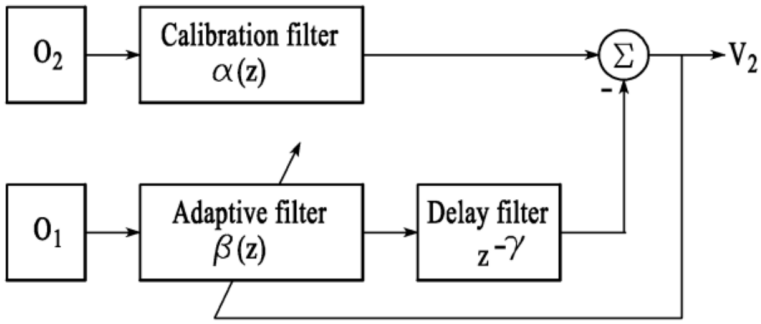

FIG.3

Figure 3, above, illustrates the following components where "z" denotes a discrete frequency domain and "γ" is a fixed delay that depends on the size of the microphone array:

(1) a physical omnidirectional microphone O_1 providing a signal to an adaptive filter β(z);

(2) the adaptive filter β(z) providing a signal to a delay filter $z^{-\gamma}$;

(3) a physical omnidirectional microphone O_2 providing a signal to a calibration filter α(z);

(4) a summing circuit (Σ) summing (i) a positive signal from the calibration filter α(z) and (ii) a negative signal from the delay filter $z^{-\gamma}$ to form a virtual microphone V_2; and

(5) the virtual microphone V_2 providing a signal to the adaptive filter β(z).

See Ex. 1001, 1:62–63, 4:41, 5:22–33, 6:1–16, Fig. 3.

The '611 patent's Figure 4 (reproduced below) depicts a block diagram of a virtual microphone V_1:

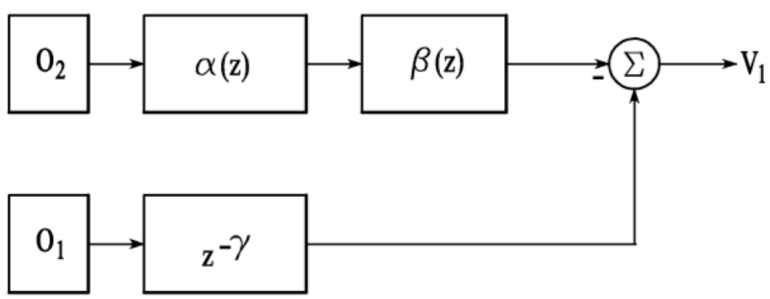

FIG.4

Figure 4, above, illustrates the following components where "z" denotes a discrete frequency domain and "γ" is a fixed delay that depends on the size of the microphone array. *See* Ex. 1001, 1:64–65, 4:41, 5:22–33, 6:17–19, Fig. 4.

The ’611 patent’s Figure 5 (reproduced below) depicts a flow diagram of acoustic voice activity detection:

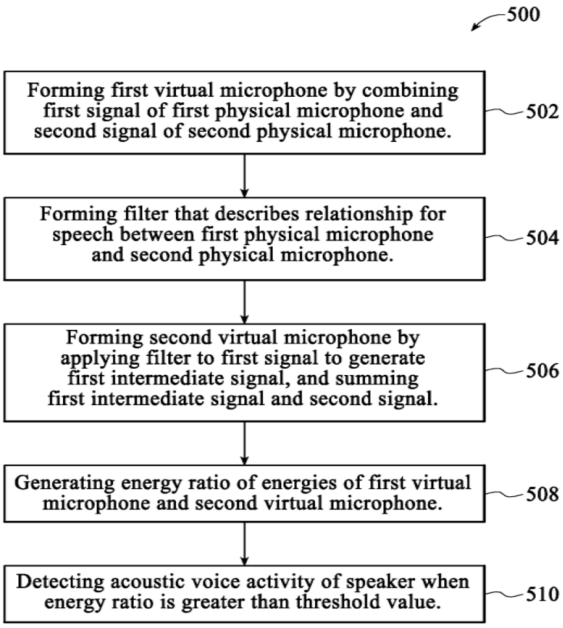

FIG.5

Figure 5, above, illustrates “acoustic voice activity detection 500” including steps 502 through 510. Ex. 1001, 1:66–67, 6:60–61, Fig. 5.

At step 502, the “detection comprises forming a first virtual microphone by combining a first signal of a first physical microphone and a second signal of a second physical microphone.” Ex. 1001, 6:61–64, Fig. 5. At step 504, the “detection comprises forming a filter that describes a relationship for speech between the first physical microphone and the second physical microphone.” *Id.* at 6:64–67, Fig. 5. At step 506, the “detection comprises forming a second virtual microphone by applying the filter to the first signal to generate a first intermediate signal, and summing the first intermediate signal and the second signal.” *Id.* at 6:67–7:3, Fig. 5. At step 508, the “detection comprises generating an energy ratio of energies of the first virtual microphone and the second virtual microphone.” *Id.*

at 7:3–5, Fig. 5. At step 510, the "detection comprises detecting acoustic voice activity of a speaker when the energy ratio is greater than a threshold value." *Id.* at 7:5–7, Fig. 5.

C. The Challenged Claims

Petitioner challenges independent claims 29 and 44 of the '611 patent, as well as claims 31–43, which depend directly or indirectly from claim 29. Pet. 1, 7–85.

Claims 29 and 44, which are illustrative, are reproduced below, with bracketed letters provided by Petitioner added to limitations for reference purposes.

> 29. [29pre] A method comprising:
>
> [29a] forming a first virtual microphone;
>
> [29b] forming a filter by generating a first quantity by applying a calibration to a second signal of a second physical microphone, generating a second quantity by applying the delay to a first signal of a first physical microphone, and forming the filter as a ratio of the first quantity to the second quantity;
>
> [29c] forming a second virtual microphone by applying the filter to the first signal to generate a first intermediate signal, and summing the first intermediate signal and the second signal; and
>
> [29d] generating a ratio of energies of the first virtual microphone and the second virtual microphone and detecting acoustic voice activity using the ratio.
>
> 44. [44pre] A method comprising:
>
> [44a] forming a first virtual microphone by generating a first combination of a first signal and a second signal, wherein the first signal is received from a first physical microphone and the second signal is received from a second physical microphone;
>
> [44b] forming a filter by generating a first quantity by

applying a calibration to at least one of the first signal and the second signal, generating a second quantity by applying a delay to the first signal, and forming the filter as a ratio of the first quantity to the second quantity; and

[44c] forming a second virtual microphone by applying the filter to the first signal to generate a first intermediate signal and summing the first intermediate signal and the second signal; and

[44d] determining a presence of acoustic voice activity of a speaker when an energy ratio of energies of the first virtual microphone and the second virtual microphone is greater than a threshold value.

Ex. 1001, 38:33–47, 40:3–21.

D. Asserted Challenges to Patentability

Petitioner asserts the following challenges to patentability:

Claims Challenged	35 U.S.C. §	Reference(s)/Basis
29, 31, 33–37, 41–44	103(a)[3]	Avendano '880[4], Hou[5]
32, 38–40	103(a)	Avendano '880, Avendano '252[6], Hou

Pet. 1, 7–85.

III. MOTION FOR JOINDER

Concurrently with the Petition, Petitioner filed a Motion for Joinder seeking joinder as a party in the Amazon IPR and consolidation with the Amazon IPR. Paper 2, 1. In August 2023, the Board terminated the

[3] The Leahy-Smith America Invents Act ("AIA"), Pub. L. No. 112-29, 125 Stat. 284 (2011), amended 35 U.S.C. § 103 effective March 16, 2013. Because the filing date of the challenged claims predates the AIA's amendment to § 103, this decision refers to the pre-AIA version of § 103.
[4] US 8,194,880 B2, issued June 5, 2012 (Ex. 1005, "Avendano '880").
[5] US 7,155,019 B2, issued December 26, 2006 (Ex. 1008, "Hou").
[6] US 8,204,252 B1, issued June 19, 2012 (Ex. 1006, "Avendano '252")

Amazon IPR in view of representations by Amazon and Patent Owner that they had settled their dispute in the Amazon IPR and related district court litigation. IPR2023-00285, Paper 16, 2.

Subsequently, in September 2023, Petitioner filed an Unopposed Motion to Withdraw the Motion for Joinder, stating that "in view of the Board's Termination Order in the Amazon IPR, Petitioner should be permitted to withdraw its Joinder Motion." Paper 9, 2.

Based on the foregoing, we grant Petitioner's Unopposed Motion to Withdraw the Motion for Joinder, as the underlying Motion for Joinder is moot in view of the Amazon IPR termination.

IV. ANALYSIS

A. Level of Ordinary Skill in the Art

Petitioner asserts that a person of ordinary skill in the art "would have at least a bachelor of science in electrical engineering, computer engineering, computer science, mechanical engineering, or a related discipline, with at least two years of relevant experience in a field related to acoustics, speech recognition, speech detection, or signal processing." Pet. 7. Petitioner also asserts that "[a]dditional education or industry experience may compensate for a deficit in the other." *Id*. Dr. Kenny's testimony supports Petitioner's assertions. *See* Ex. 1003 ¶¶ 22–23.

Patent Owner asserts that a person of ordinary skill in the art "would have a bachelor's degree in computer engineering, computer science, electrical engineering, mechanical engineering, or a similar field, and three years of industry or academic experience in a field related to acoustics, speech recognition, speech detection, or signal processing." Prelim. Resp. 14. Patent Owner also asserts that "[w]ork experience can substitute for

formal education and additional formal education can substitute for work experience." *Id.*

Petitioner and Patent Owner's proposed levels of skill in the art are similar, except that Patent Owner proposes slightly more experience, i.e., "three years of industry or academic experience" versus "at least two years of relevant experience." Prelim. Resp. 14; Pet. 7. Based on the current record and for purposes of analysis, we accept Petitioner's description of an ordinarily skilled artisan, with the exception of the qualifier "at least" with respect to experience which renders the level of ordinary skill in the art ambiguous and may encompass levels beyond ordinary, as it is consistent with the '611 patent and the asserted prior art.

B. Claim Construction

We construe claim terms "using the same claim construction standard" that district courts use to construe claim terms in civil actions under 35 U.S.C. § 282(b). *See* 37 C.F.R. § 42.100(b). Under that standard, claim terms "are given their ordinary and customary meaning, which is the meaning the term would have to a person of ordinary skill in the art at the time of the invention." *Power Integrations, Inc. v. Fairchild Semiconductor Int'l, Inc.*, 904 F.3d 965, 971 (Fed. Cir. 2018) (citing *Phillips v. AWH Corp.*, 415 F.3d 1303, 1312–13 (Fed. Cir. 2005) (en banc)). The meaning of claim terms may be determined by "look[ing] principally to the intrinsic evidence of record, examining the claim language itself, the written description, and the prosecution history, if in evidence." *DePuy Spine, Inc. v. Medtronic Sofamor Danek, Inc.*, 469 F.3d 1005, 1014 (Fed. Cir. 2006) (citing *Phillips*, 415 F.3d at 1312–17).

Petitioner contends that "[n]o formal claim constructions are necessary." Pet. 7. Patent Owner proposes a claim construction for the claim 1 term of "forming a filter" and "filter" which are used in claims 29 and 44. Prelim. Resp. 12. As discussed below, we determine that Petitioner has not met its burden on the merits and, because the construction of these terms is not relevant to that determination, we need not address the construction of the terms that Patent Owner proposes for construction.

C. Principles of Law

A patent claim is unpatentable under 35 U.S.C. § 103 if "the differences between the claimed invention and the prior art are such that the claimed invention as a whole would have been obvious before the effective date of the claimed invention to a person having ordinary skill in the art to which said subject matter pertains." 35 U.S.C. § 103 (2011); *see also KSR Int'l Co. v. Teleflex Inc.*, 550 U.S. 398, 406 (2007). The question of obviousness is resolved on the basis of underlying factual determinations including (1) the scope and content of the prior art; (2) any differences between the claimed subject matter and the prior art; (3) the level of ordinary skill in the art; and (4) when in evidence, objective indicia of nonobviousness.[7] *Graham v. John Deere Co.*, 383 U.S. 1, 17–18 (1966).

D. Alleged Obviousness of Claims 29, 31, 33–37, and 41–44 Over Avendano '880 and Hou

Petitioner contends that claims 29, 31, 33–37, and 41–44 are unpatentable under § 103(a) as obvious over Avendano '880 and Hou. *See* Pet. 1, 7–65. Petitioner provides the declaration of Dr. Thomas W. Kenny in

[7] No evidence of objective indicia of nonobviousness is presented in Patent Owner's Preliminary Response. *See generally* Prelim. Resp.

support. Ex. 1003. Patent Owner disputes Petitioner's contentions, asserting that the prior art does not teach certain claim limitations. *See* Prelim. Resp. 17–23.

We begin our discussion with brief summaries of Avendano '880 and Hou, and then address the evidence and arguments presented.

1. Avendano '880 (Ex. 1005)

Avendano '880 is a U.S. patent titled "System and Method for Utilizing Omni-Directional Microphones for Speech Enhancement," filed on January 29, 2007, and issued on June 5, 2012. Ex. 1005, codes (12), (22), (45), (54). Avendano '880 states that the invention "relates generally to audio processing." *Id*. at 1:24; *see id*. at code (57).

Avendano '880 discloses systems and methods "for utilizing intermicrophone level differences (ILD) to attenuate noise and enhance speech." Ex. 1005, 2:5–7, 3:13–17, code (57). Preferably, "the ILD is based on energy level differences of a pair of omni-directional microphones." *Id*. at 2:7–9, code (57). For example, "a primary acoustic signal is received by a primary microphone, and a secondary acoustic signal is received by a secondary microphone." *Id*. at 2:14–17, code (57). "The primary and secondary acoustic signals are converted into primary and secondary electric signals for processing." *Id*. at 2:17–19, code (57).

"A differential microphone array (DMA) module processes the primary and secondary electric signals to determine a cardioid primary signal and a cardioid secondary signal." Ex. 1005, 2:20–22, code (57). Preferably, "the primary and secondary electric signals are delayed by a delay node." *Id*. at 2:22–24. "The cardioid primary signal is then determined by taking a difference between the primary electric signal and

the delayed secondary electric signal, while the cardioid secondary signal is determined by taking a difference between the secondary electric signal and the delayed primary electric signal." *Id*. at 2:24–29.

"The cardioid signals are filtered through a frequency analysis module" that "takes the signals and mimics the frequency analysis of the cochlea (i.e., cochlear domain)." Ex. 1005, 2:34–36, code (57). "Energy levels associated with the cardioid primary signal and the cardioid secondary signals are then computed (e.g., as power estimates) and the results are processed by an ILD module" to obtain the ILD. *Id*. at 2:41–45, code (57). The ILD module may obtain the ILD by "using a non-linear combination," e.g., by "dividing the power estimate associated with the cardioid primary signal by the power estimate associated with the cardioid secondary signal." *Id*. at 2:44–48, code (57). The ILD "may then be used" to (1) "suppress unwanted sound sources" and (2) "enhance the speech of the primary acoustic signal." *Id*. at 2:48–50, code (57).

Avendano '880's Figure 1a (reproduced below) is a drawing depicting an environment for practicing embodiments of the invention:

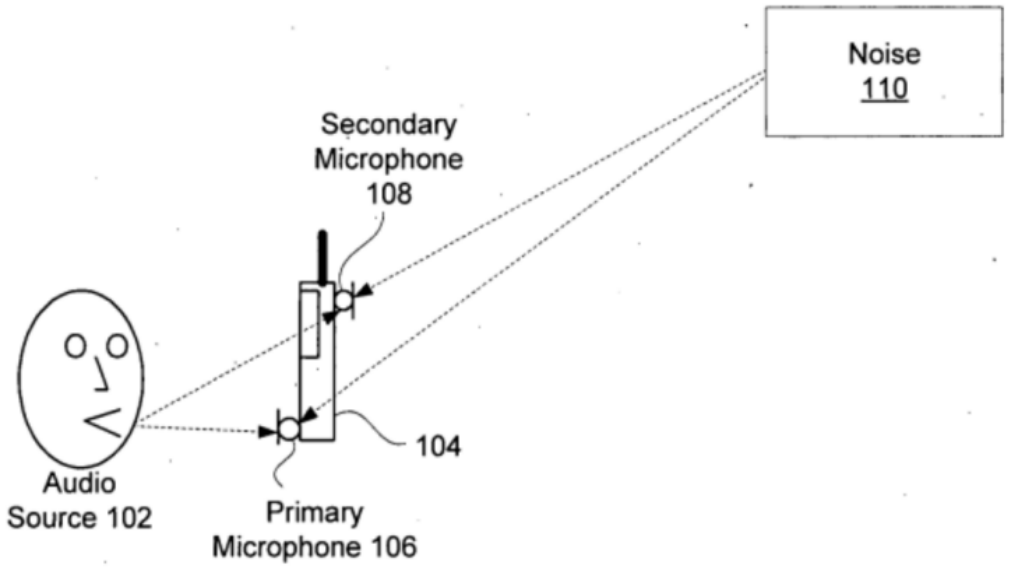

FIG. 1a

Figure 1a, above, illustrates a user who "provides an audio (speech) source 102 to an audio device 104" comprising two microphones: "a primary microphone 106 relative to the audio source 102 and a secondary microphone 108 located a distance, d, away from the primary microphone 106." Ex. 1005, 3:27–33, Fig. 1a. Preferably, "the microphones 106 and 108 are omni-directional microphones." *Id*. at 3:33–35.

"While the microphones 106 and 108 receive sound (i.e., acoustic signals) from the audio source 102, the microphones 106 and 108 also pick up noise 110." Ex. 1005, 3:36–38, Fig. 1a. Noise 110 "may comprise any sounds from one or more locations different than the audio source 102" and "may include reverberations and echoes." *Id*. at 3:38–42.

Avendano '880's Figure 4a (reproduced below) is a block diagram depicting an embodiment of audio processing engine 204:

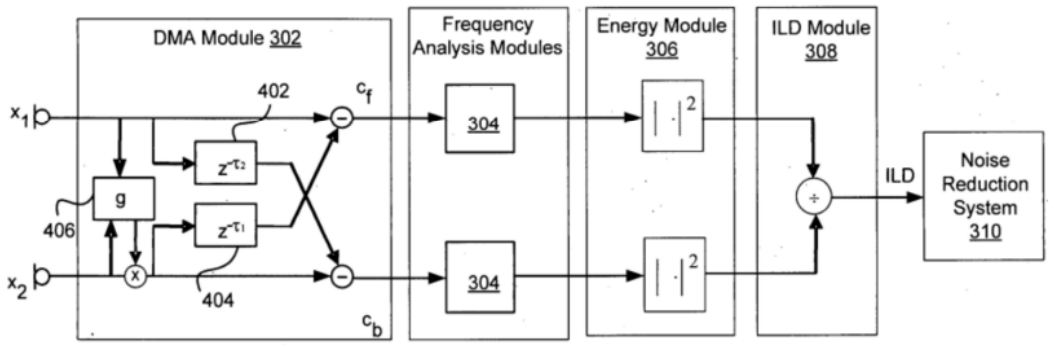

FIG. 4a

Figure 4a illustrates one implementation of audio processing engine 204 including differential microphone array (DMA) module 302, frequency-analysis module 304, energy module 306, ILD module 308, and noise-reduction system 310. Ex. 1005, 2:61–63, 5:15–17, 6:36–40, Fig. 4a; *see id*. at 2:20. As Figure 4a shows, DMA module 302 receives an electric signal x1 corresponding to the primary acoustic signal X1 and an electric signal x2 corresponding to the secondary acoustic signal X2. *See id*. at 4:6–8, 4:23–27, 5:17–20, Fig. 4a.

After receiving the electric signals x1 and x2, DMA module 302 determines "sounds and signals in a front and back cardioid region about" audio device 104 by "delaying and subtracting the acoustic signals captured by the microphones 106 and 108." Ex. 1005, 4:29–33. By doing so, DMA module 302 creates "directional patterns" for the microphones. *Id*. at 4:27–29; *see id.* at 4:40–46.

For example, "one directional pattern created by the DMA module 302 allows sounds generated from an audio source 102 within a front cardioid region around the audio device 104 to be received," and "a second pattern allows sounds from a second audio source 102 within a back

cardioid region around the audio device 104 to be received." Ex. 1005, 4:47–52. "Sounds from audio sources 102 beyond these regions may also be received but the sounds may be attenuated." *Id*. at 4:52–54.

2. Hou (Ex. 1008)

Hou is a U.S. patent titled "Adaptive Microphone Matching in Multi-Microphone Directional System," filed on March 14, 2001, and issued on December 26, 2006. Ex. 1008, codes (12), (22), (45), (54). Hou states that the invention "relates to multi-microphone sound pick-up systems" and "matching microphone sensitivity in multi-microphone sound pick-up systems." *Id.* at 1:22–25.

Hou explains that a "multi-microphone array can selectively enhance sounds coming from certain directions while suppressing interference coming from other directions." Ex. 1008, 1:30–32. To "achieve good directionality," however, the sensitivities of the microphones must match. *Id.* at 1:48–50; *see id.* at 1:67–2:2. "When the sensitivities of the microphones are not properly matched, then the directionality is substantially degraded and thus the ability to suppress interference coming from a particular direction is poor." *Id.* at 1:50–53; *see id.* at 1:53–62, Figs. 2(a)–2(d). The sensitivities of the microphones may not match due to manufacturing differences or "drift over time." *See id.* at 2:3–10, 2:35–37. "Hence, once matched microphones can become mismatched over time." *Id.* at 2:10–11.

Hou purports to address that problem by providing "improved approaches to matching sensitivities of microphones in multi-microphone directional processing systems." Ex. 1008, 2:44–46, 4:41–43, code (57); *see id.* at 2:38–40. Hou's approaches "adaptively match microphone

sensitivities" by adaptively measuring "a sensitivity difference between microphones" and then compensating (or correcting) "an electronic sound signal from one or more of the microphones." *Id.* at 2:46–48, 4:43–44, 4:50–54, code (57). "As a result of the adaptive processing, the microphones 'effectively' become matched and remain matched over time and while in use." *Id.* at 4:54–56; *see id.* at 2:48–50, 4:45–47, code (57). Hou's approaches permit "multi-microphone directional processing systems to achieve superior directionality and consistent Signal-to-Noise Ratio (SNR) across all conditions." *Id.* at 4:57–60, 9:38–41. Accordingly, the "directional noise suppression is robust." *Id.* at 2:48, 4:44–45, code (57); *see id.* at 9:29–38.

Hou's Figure 5 (reproduced below) is a block diagram depicting a two-microphone directional processing system:

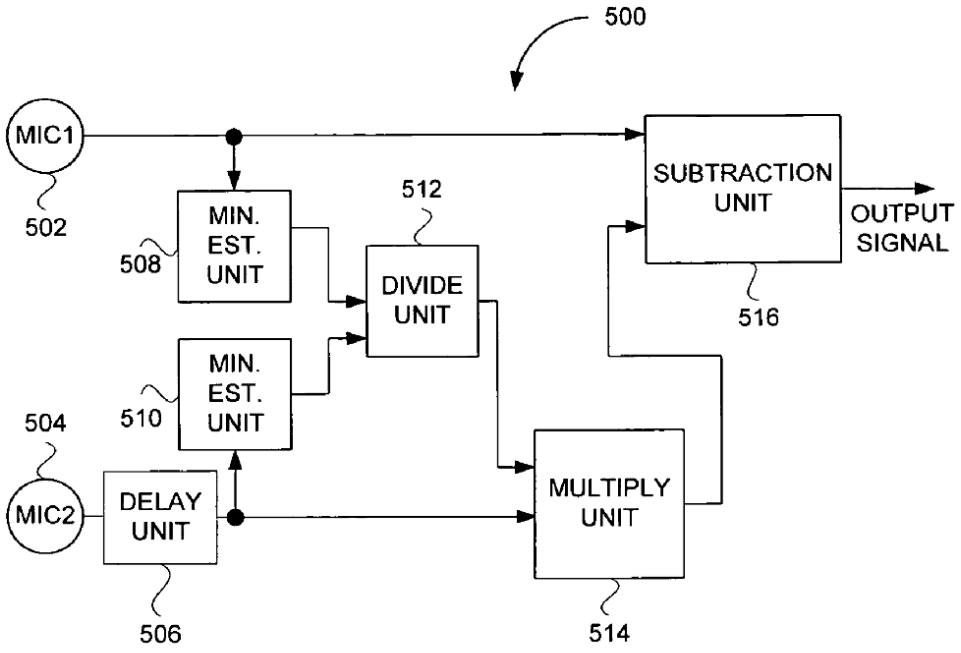

FIG. 5

Figure 5, above, illustrates two-microphone directional processing system 500. First minimum estimate unit 508 "estimates the minimum for the first electronic sound signal." Ex. 1008, 5:36–38. Second minimum estimate unit 510 "estimates the minimum of the second electronic sound signal." *Id.* at 5:38–39. "Typically, these minimums are measured over a time constant duration, such that the minimum is a relatively long-term minimum." *Id.* at 5:39–41.

Divide unit 512 "produces a quotient by dividing the first minimum estimate by the second minimum estimate." Ex. 1008, 5:42–43. The "quotient represents a scaling amount that is sent to" multiplication unit 514. *Id.* at 5:43–45. "The second electronic sound signal is then multiplied with the scaling amount to produce a compensated sound signal." *Id.* at 5:45–47. "The compensated sound signal is thus compensated (or corrected) for the relative difference in sensitivity between the mismatched first and second microphones 502 and 504." *Id.* at 5:47–50.

Subtraction unit 516 "subtracts the compensated electronic sound signal from the first electronic sound signal to produce an output signal." Ex. 1008, 5:50–52, Fig. 5. Thus, "the output signal has been processed by the two-microphone directional processing system 500 to have robust directionality despite a mismatch between the first and second microphones 502 and 504." *Id.* at 5:52–56.

3. Discussion

a. Claim 29

We determine that Petitioner has failed to meet its burden to show a reasonable likelihood that Avendano '880 and Hou would have rendered claim 29 obvious. This determination is based on the evidence and

argument presented for limitation [29b], so we solely address this issue below.

Limitation 29[b] recites:

> forming a filter by generating a first quantity by applying a calibration to a second signal of a second physical microphone, generating a second quantity by applying the delay to a first signal of a first physical microphone, and forming the filter as a ratio of the first quantity to the second quantity;

Petitioner asserts that the combination of Avendano '880 and Hou teaches limitation [29b]. Pet. 32–38. Petitioner contends that the limitation is taught in two alternative ways. *Id*. In the first assertion, Petitioner depicts the combination of the prior art as shown in annotated Figure 4a of Avendano and annotated Figure 5 of Hou, reproduced below. *Id*. at 34–35.

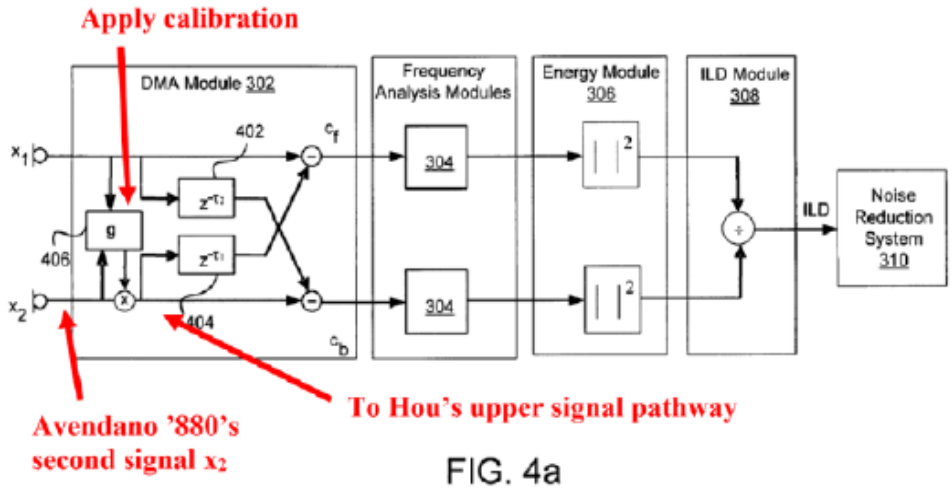

FIG. 4a

Ex. 1005, FIG. 4a

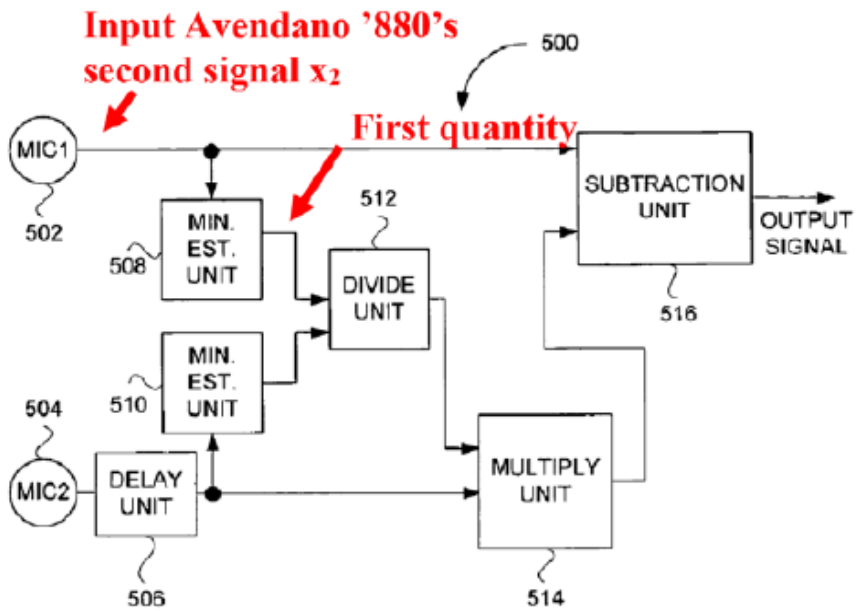

Ex. 1008, FIG. 5

Annotated Figure 4a of Avendano and annotated Figure 5 of Hou, above, depict Petitioner's proposed combination of Avendano and Hou in view of limitation [29b]. Pet. 34–35. Petitioner argues that "Hou's 'system 500' would form a filter based on Avendano '880's first signal x1 and second signal x2 (e.g., from Avendano '880's first physical microphone 106 and

second physical microphone 108, respectively)." *Id*. at 34 (citing Ex. 1003 ¶ 133). More specifically, Petitioner contends that "a calibration would be applied to the second signal x2 using Avendano '880's 'gain factor, g' and/or multiplexer . . . [and] [t]he calibrated second signal x2 would be subsequently processed to generate a "first quantity" (e.g., by processing the calibrated second signal x2 using Hou's 'first minimum estimate unit 508')." *Id*. (citing Ex. 1003 ¶ 134).

Patent Owner alleges that "a calibration would be applied to the second signal x2 using Avendano '880's 'gain factor, g,'" but then "***subsequent*** processing results in the 'first quantity.'" Prelim. Resp. 22. Patent Owner points to Hou's minimum estimate unit 508 as performing the subsequent processing. *Id*.

We agree with Patent Owner and find that the argument and evidence presented in the Petition is insufficient to teach limitation [29b]. The limitation requires that the formation of the "filter by generating a first quantity by applying a calibration to a second signal of a second physical microphone." Under Petitioner's assertion, a calibration would be applied to the second signal using Avendano '880's gain factor, but then the *calibrated signal would be subsequently processed* to generate the claimed first quantity "by processing the calibrated second signal [] using Hou's 'first minimum estimate unit 508.'" Pet. 34. This does not meet the claim limitation: it requires that the application of calibration generates the first quantity. Petitioner instead asserts that it is subsequent processing by Hou's "first minimum estimate unit 508" that generates the "first quantity," which does not meet the claim limitation.

Petitioner also asserts that "a calibration also would be applied to the second signal x2 by Hou's 'first minimum estimate unit 508' to generate a first quantity." Pet. 36 (citing Ex. 1003 ¶ 135). Petitioner's assertion is that Hou's minimum estimate unit 508 serves to apply a calibration to a second signal. Hou's first minimum estimate unit 508, however, "estimates the minimum for the first electronic sound signal," and there is no indication or support that the minimum estimate unit performs calibration. *See* Ex. 1008, 5:36–38. Petitioner also provides no explanation or support for this assertion. *See* Pet. 36; Ex. 1003 ¶ 135.

Accordingly, Petitioner has not met its burden to demonstrate a reasonable likelihood that it would prevail in showing that claim 29 would have been obvious over Avendano '880 and Hou.

b. Claim 44

Limitation [44b] recites:

> forming a filter by generating a first quantity by applying a calibration to at least one of the first signal and the second signal, generating a second quantity by applying a delay to the first signal, and forming the filter as a ratio of the first quantity to the second quantity; and

Petitioner relies upon the same argument and evidence for this limitation as that provided for limitation [29b]. Pet. 64 (referring to Section III(D) for limitation [29b]); Ex. 1003 ¶ 217. For the reasons discussed above, we do not find that the evidence in the Petition is sufficient to demonstrate that the combination of Avendano '880 and Hou teaches that the first quantity is generated by applying a calibration.

Accordingly, Petitioner has not met its burden to demonstrate a reasonable likelihood that it would prevail in showing that claim 44 would have been obvious over Avendano ’880 and Hou.

c. Dependent Claims 31, 33–37, and 41–43

Petitioner argues that dependent claims 31, 33–37, and 41–43 would have been obvious over Avendano ’880 and Hou. Pet. 48–63. Because claims 31, 33–37, and 41–43 depend directly or indirectly from claim 29, and because Petitioner’s arguments and evidence for the dependent claims do not cure the shortcomings as to claim 29, the showing for the dependent claims is also deficient.

Accordingly, Petitioner has not met its burden to demonstrate a reasonable likelihood that it would prevail in showing that claims 31, 33–37, and 41–43 would have been obvious over Avendano ’880 and Hou.

E. Alleged Obviousness of Claims 32 and 38–40 Over Avendano ’880, Avendano ’252, and Hou

Petitioner contends that claims 32 and 38–40 are unpatentable under § 103(a) as obvious over Avendano ’880, Avendano ’252, and Hou. *See* Pet. 1, 65–85. Because claims 32 and 38–40 depend directly or indirectly from claim 29, and because Petitioner’s arguments and evidence for the dependent claims do not cure the shortcomings as to claim 29, the showing for the dependent claims is also deficient.

Accordingly, Petitioner has not met its burden to demonstrate a reasonable likelihood that it would prevail in showing that claims 32 and 38–40 would have been obvious over Avendano ’880, Avendano ’252, and Hou.

V. CONCLUSION

We determine that Petitioner has not demonstrated a reasonable likelihood of prevailing on its challenges as to at least one challenged claim. Accordingly, we do not institute *inter partes* review.

VI. ORDER

Accordingly, it is

ORDERED that, pursuant to 35 U.S.C. § 314(a), *inter partes* review is *denied*.

For PETITIONER:

Lisa Nguyen
David Tennant
Grace Wang
Alan Billharz
Colby Davis
ALLEN & OVERY LLP
lisa.nguyen@allenovery.com
david.tennant@allenovery.com
grace.wang@allenovery.com
alan.billharz@allenovery.com
colby.davis@allenovery.com

For PATENT OWNER:

Peter Lambrianakos
Vincent J. Rubino, III
Enrique W. Iturralde
Richard Cowell
Jacob Ostling
FABRICANT LLP
plambrianakos@fabricantllp.com
vrubino@fabricantllp.com
eiturralde@fabricantllp.com
rcowell@fabricantllp.com
jostling@fabricantllp.com