Trials@uspto.gov
571-272-7822

Paper 10
Entered: December 28, 2023

UNITED STATES PATENT AND TRADEMARK OFFICE

BEFORE THE PATENT TRIAL AND APPEAL BOARD

META PLATFORMS, INC.,
Petitioner,

v.

JAWBONE INNOVATIONS, LLC,
Patent Owner.

IPR2023-01130
Patent 11,122,357 B2

Before GEORGIANNA W. BRADEN, NORMAN H. BEAMER, and JASON M. REPKO, *Administrative Patent Judges*.

BEAMER, *Administrative Patent Judge*.

DECISION
Denying Institution of *Inter Partes* Review
35 U.S.C. § 314
Granting Unopposed Motion to Withdraw Motion for Joinder
37 C.F.R. § 42.122

I. INTRODUCTION

On June 27, 2023, Meta Platforms, Inc. ("Petitioner") filed a Petition ("Pet.") pursuant to 35 U.S.C. §§ 311–319 to institute an *inter partes* review of claims 1–20 of U.S. Patent No. 11,122,357 B2 (Ex. 1001, "the '357 patent"). Paper 1. On October 12, 2023, Jawbone Innovations, LLC ("Patent Owner") filed a Preliminary Response ("Prelim. Resp."). Paper 9.

On June 27, 2023, Petitioner also filed a Motion for Joinder to And Consolidation With Related *Inter Partes* Review IPR2023-00251, which Patent Owner opposed on July 27, 2023. Papers 2, 7. However, on August 8, 2023, that Proceeding was terminated due to settlement. IPR2023-00251, Paper 15. Accordingly, on September 8, 2023, Petitioner filed an Unopposed Motion To Withdraw Motion For Joinder. Paper 8. We grant that motion.

The standard for instituting an *inter partes* review is set forth in 35 U.S.C. § 314(a), which provides that an *inter partes* review may not be instituted unless the information presented in the Petition and any preliminary response shows that "there is a reasonable likelihood that the petitioner would prevail with respect to at least 1 of the claims challenged in the petition." Applying that standard, we deny the Petition and do not institute an *inter partes* review.

II. BACKGROUND

A. The '357 Patent

The '357 patent, titled "Forming Virtual Microphone Arrays Using Dual Omnidirectional Microphone Array (DOMA)," was filed on August 5, 2013, issued on September 14, 2021, is a continuation of an application filed June 13, 2008, and lists several provisional applications, the earliest of

which was filed on June 13, 2007. Ex. 1001, codes (54), (22), (45), (63), (60); Pet. 22.

The '357 patent is directed to:

> [a] dual omnidirectional microphone array noise suppression [system] used to form two distinct virtual directional microphones which are configured to have very similar noise responses and very dissimilar speech responses. The only null formed is one used to remove the speech of the user from [the second virtual microphone]. The two virtual microphones may be paired with an adaptive filter algorithm and VAD [Voice Activity Detector] algorithm to significantly reduce the noise without distorting the speech, significantly improving the SNR [signal-to-noise ratio] of the desired speech over conventional noise suppression systems.

Ex. 1001, code (57). Figure 1 is reproduced below.

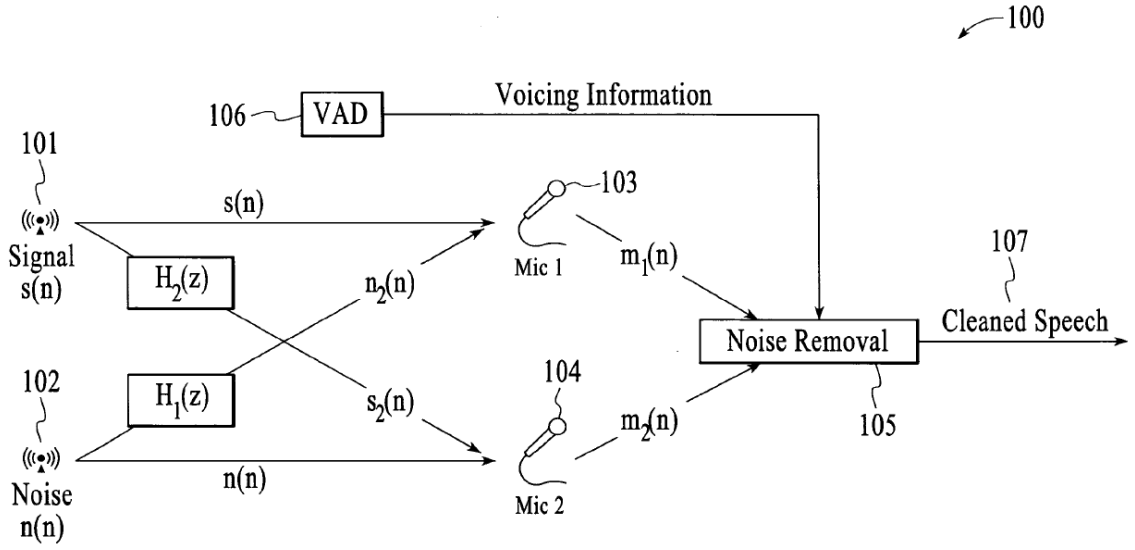

Figure 1 is a block diagram of a two-microphone adaptive noise suppression system. Ex. 1001, 2:29–30. Microphones Mic 1 and Mic 2 receive acoustic information from speech signal source 101 and noise source 102, and the acoustic information received at each microphone is provided to Noise Removal system 105. *Id.* at 6:11–25. VAD 106 is a voice activity detector

which generates a voicing information signal indicating when user speech is detected — for example, a skin surface microphone. *Id.* at 5:64–67, 6:5–6. Noise Removal component 105 generates the virtual microphones paired with the adaptive filter algorithm to generate cleaned speech 107. *Id.* at 5:16–21.

The DOMA provides adaptive noise cancellation by filtering and summing the two microphone signals in the time domain. Ex. 1001, 8:27–30. The adaptive filter generally uses the signal received from a microphone of the DOMA to remove noise from the speech received from the other microphone of the DOMA, relying on a slowly varying linear transfer function between the two microphones for sources of noise. *Id.* at 8:30–35. Following processing of the two channels of the DOMA, an output signal is generated in which the noise content is attenuated with respect to the speech content. *Id.* at 8:35–38. According to the '357 patent, the disclosed embodiments "result[] in excellent noise suppression performance and minimal speech removal and distortion." *Id.* at 8:16–18.

In one embodiment, virtual directional microphones are formed from the physical microphones as shown in Figure 4 reproduced below:

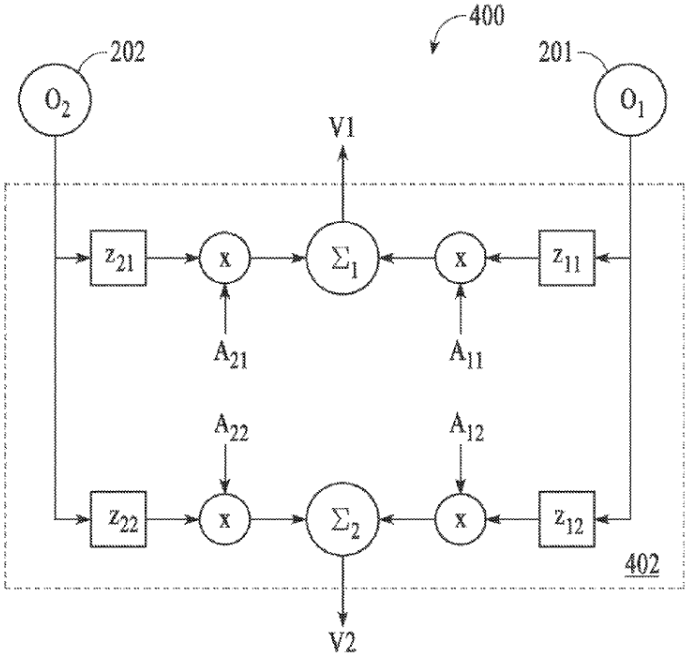

FIG.4

Figure 4 is a block diagram for a DOMA depicting how two virtual directional microphones V_1 and V_2 are formed based on two physical omnidirectional microphones O_1 and O_2, where the physical microphone signals are coupled to processing component 402, in which delays z_{21}, z_{11}, z_{22}, and z_{12}, and gains A_{21}, A_{11}, A_{22}, and A_{12} are applied to the signals, which are then summed via $\sum_1$ and $\sum_2$. Ex. 1001, 2:40–42, 8:62–9:21. As stated in the '357 patent, "varying the magnitude and sign of the delays and gains of the processing paths leads to a wide variety of virtual microphones (VMs), also referred to herein as virtual directional microphones." *Id.* at 9:22–25.

In particular, for adaptive noise suppression, the delay and gain values are selected so that the noise responses of V_1 and V_2 are substantially similar, there is sufficient speech response for V_1, and there is a relatively small speech response for V_2, which ensures that the cleaned speech will have significantly higher signal-to-noise ratio than the original speech

captured by microphone O_1. Ex. 1001, 10:44–60. The ’357 patent discloses the results of a particular selection of delay and gain parameters that meet the criteria for effective noise suppression, in which arranging for the response of V_2 to have a null at the speech location will cause V_2 to exhibit minimal response to the speech. *Id.* at 11:50–52. The ’357 patent then explains that the speech null at zero degrees is not present for noise in the far field for the same microphone, with a noise source distance of approximately 1 meter. *Id.* at 11:54–57. The ’357 patent states this ensures that noise in front of the user will be detected so that it can be removed. *Id.* at 11:57–58. According to the ’357 patent, this differs from conventional systems that can have difficulty removing noise in the direction of the mouth of the user. *Id.* at 11:58–60.

The plotted responses of the virtual microphones for an optimal selection of the delay and gain parameters are shown in a series of figures — first, in Figure 9 reproduced below.

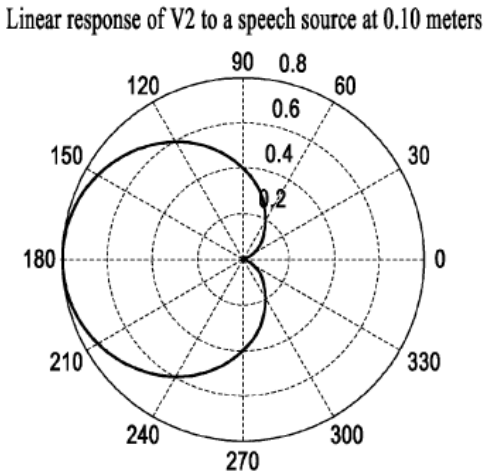

FIG.9

Figure 9 is a plot of linear response of virtual microphone V_2 with delay=0.8 to a 1 kHz speech source at a distance of 0.1 m. Ex. 1001, 11:40–42. The null in the linear response of virtual microphone V_2 to speech is located at 0

degrees, where the speech is typically expected to be located. *Id.* at 11:42–44.

Next, the response of V_2 to noise is shown in Figure 10 reproduced below.

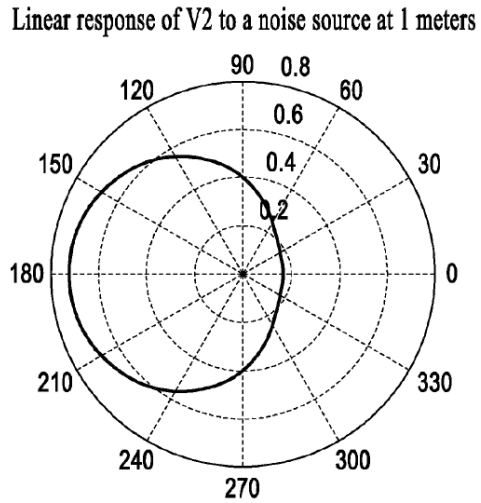

FIG.10

Figure 10 is a plot of a linear response of virtual microphone V_2 with delay=0.8 to a 1 kHz noise source at a distance of 1.0 m. *Id.* at 11:44–47. The '357 patent states that "[t]he linear response of V_2 to noise is devoid of or includes no null, meaning all noise sources are detected." *Id.* at 11:47–49.

Furthermore, the response of V_1 to speech is shown in Figure 11 reproduced below.

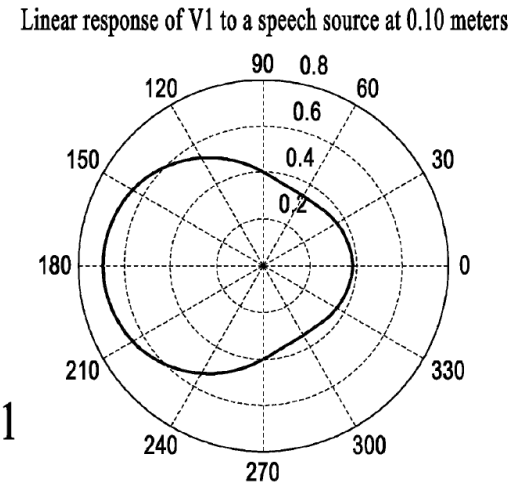

FIG.11

Figure 11 is a plot of linear response of virtual microphone V_1 to a 1 kHz speech source at a distance of 0.1 m. Ex. 1001, 12:39–41. The '357 patent states that "[t]here is no null and the response for speech is greater than that shown in FIG. **9**." *Id.* at 2:64–65.

Finally, the response of V1 to noise is shown in Figure 12 reproduced below.

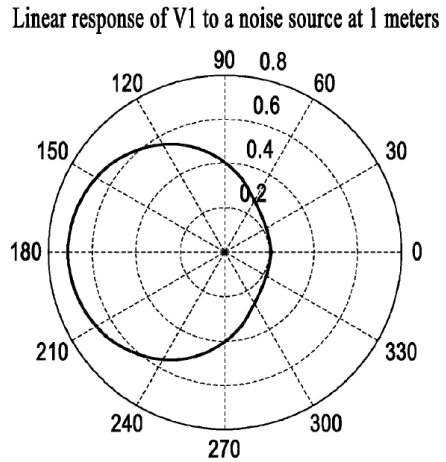

FIG.12

Figure 12 is a plot of linear response of virtual microphone V_1 to a 1 kHz noise source at a distance of 1.0 m. Ex. 1001, 12:44–46. The '357 patent states that "[t]here is no null and the response is very similar to V_2 shown in FIG. **10**." *Id.* at 3:1–2.

B. Illustrative Claim

Independent claim 1 is illustrative of the challenged subject matter and is reproduced below.

> 1. A device, comprising:
>
> a first virtual microphone comprising a first combination of a first microphone signal and a second microphone signal, wherein the first microphone signal is generated by a first physical microphone and the second microphone signal is generated by a second physical microphone;

> a second virtual microphone comprising a second combination of the first microphone signal and the second microphone signal, wherein the second combination is different from the first combination, wherein the first virtual microphone and the second virtual microphone are distinct virtual directional microphones with substantially similar responses to noise and substantially dissimilar responses to speech; and
>
> a signal processor coupled with the first and second microphone signals and operative to combine the first and second microphone signals by filtering and summing in the time domain, to apply a varying linear transfer function between the first and second microphone signals, and to generate an output signal having noise content that is attenuated with respect to speech content.

Ex. 1001, 34:55–35:10.

We note that Figures 9–12 reproduced above exemplify the claim 1 requirement that the virtual microphones have "substantially similar responses to noise and substantially dissimilar responses to speech."

C. Asserted Challenges to Patentability and Evidence of Record

Petitioner challenges the patentability of claims 1–20 of the '357 patent based on the following combination of references:

Claims Challenged	35 U.S.C. §	Reference(s)/Basis
1–20	103[1]	Brandstein,[2] Gannot,[3]
4, 13, 14, 18, 19	103	Brandstein, Gannot, Griffiths-Jim[4]
4, 5, 6, 13, 14, 18, 19	103	Brandstein, Gannot, McCowan[5]

Pet. 22. In support of its patentability challenge, Petitioner relies on, *inter alia*, the Declaration of Richard M. Stern, Ph.D. that was filed in IPR2023-00251 and refiled in this Proceeding. Ex. 1002 ("Stern Decl.").

---

[1] The Leahy-Smith America Invents Act, Pub. L. No. 112-29, 125 Stat. 284 (2011) ("AIA"), included revisions to 35 U.S.C. § 103 that became effective as of March 16, 2013. Although the application for the '357 patent was filed after March 16, 2013, it includes a priority claim to an application filed before this date. Ex. 1001, codes (22), (60), (63). Accordingly, for purposes of institution, we apply the pre-AIA version of 35 U.S.C. § 103.

[2] Brandstein, et al. (ed.), *Microphone Arrays: Signal Processing Techniques And Applications* (excerpts) (2001) ("Brandstein," Ex. 1003).

[3] Gannot et al., *Signal Enhancement Using Beamforming and Nonstationarity with Applications to Speech*, Vol. 49, No. 8, IEEE Transactions On Signal Processing, 1614 (Aug. 2001) ("Gannot," Ex. 1004).

[4] Griffiths & Jim, *An Alternative Approach to Linearly Constrained Adaptive Beamforming*, Vol. AP-30, No. 1, IEEE Transactions On Antennas And Propagation, 27 (Jan. 1982) ("Griffiths-Jim," Ex. 1005).

[5] Iain A. McCowan, et al., *Near-Field Adaptive Beamformer for Robust Speech Recognition*, Digital Signal Processing, Vol. 12, Issue 1 (2002), 87–106 ("McCowan," Ex. 1006).

D. Real Parties in Interest

The parties identify themselves as real parties in interest. Pet. 80; Paper 6, 2.

E. Related Proceedings

The parties identify the following related proceedings: *Jawbone Innovations, LLC v. Samsung Electronics Co., Ltd. and Samsung Electronics America, Inc.*, Case No. 2:21-cv-00186-JRG (E.D. Tex.); *Jawbone Innovations, LLC v. Amazon.com, Inc.,* Case No. 5:22-cv-06727-TLT (N.D. Cal.); *Jawbone Innovations, LLC v. Amazon.com, Inc.,* Case No. 2:21-cv-00435 (E.D. Tex.); *Jawbone Innovations, LLC v. Apple Inc.*, Case No. 6:21-cv-00984-ADA (W.D. Tex.); *Jawbone Innovations, LLC v. Google LLC*, Case No. 6:21-cv-00985-ADA (W.D. Tex.); *Jawbone Innovations, LLC v. Google LLC, Case No. 3:23-cv-00466 (N.D. Cal.); Jawbone Innovations, LLC v. Guangdong OPPO Mobile Telecommunications Corp., Ltd., d/b/a OPPO, Case No. 2:23-cv-00079 (E.D. Tex.);* Jawbone Innovations, LLC v. *HTC Corporation*, Case No. 2:23-cv-00077 (E.D. Tex.); *Jawbone Innovations, LLC v. LG Electronics, Inc.*, Case No. 2:23-cv-00078 (E.D. Tex.); *Jawbone Innovations, LLC v. Meta Platforms, Inc.*, Case No. 6:23-cv-00158 (W.D. Tex.); *Jawbone Innovations, LLC v. Panasonic Holdings Corporation*, Case No. 2:23-cv-00081 (E.D. Tex.); *Jawbone Innovations, LLC v. Sony Electronics Inc.*, Case No. 2:23-cv-01161-MEF-LDW (D.N.J.); *Jawbone Innovations, LLC v. ZTE Corporation*, Case No. 2:23-cv-00082 (E.D. Tex.); *Google LLC v. Jawbone Innovations, LLC,* IPR2022-01124; *Samsung Electronics Co., Ltd., et al. v. Jawbone Innovations, LLC,* IPR2022-01321; *Amazon.Com, Inc. v. Jawbone Innovations, LLC,* IPR2023-00251. Pet. 80–81; Paper 6, 2–3.

III. ANALYSIS OF PETITIONER'S CHALLENGE

A. Legal Standards

To prevail in its challenge, Petitioner must demonstrate by a preponderance of the evidence that the claims are unpatentable. 35 U.S.C. § 316(e); 37 C.F.R. § 316(e). "In an IPR, the petitioner has the burden from the onset to show with particularity why the patent it challenges is unpatentable." *Harmonic Inc. v. Avid Tech., Inc.,* 815 F.3d 1356, 1367 (Fed. Cir. 2016) (citing 35 U.S.C. § 312(a)(3) (2012) (requiring *inter partes* review petitions to identify "with particularity . . . the evidence that supports the grounds for the challenge to each claim")). This burden of persuasion never shifts to the patent owner. *See Dynamic Drinkware, LLC v. Nat'l Graphics, Inc.*, 800 F.3d 1375, 1378 (Fed. Cir. 2015) (discussing the burden of proof in *inter partes* review).

A patent claim is unpatentable under 35 U.S.C. § 103 if the differences between the claimed subject matter and the prior art are such that the subject matter, as a whole, would have been obvious at the time the invention was made to a person having ordinary skill in the art to which said subject matter pertains. *KSR Int'l Co. v. Teleflex Inc.*, 550 U.S. 398, 406 (2007). The question of obviousness is resolved on the basis of underlying factual determinations including: (1) the scope and content of the prior art; (2) any differences between the claimed subject matter and the prior art; (3) the level of ordinary skill in the art; and (4) when in evidence, objective indicia of non-obviousness (also called secondary considerations), such as commercial success, long-felt but unsolved needs, and failure of others. *Graham v. John Deere Co.*, 383 U.S. 1, 17–18 (1966). We analyze grounds based on obviousness in accordance with the above-stated principles.

B. Level of Ordinary Skill in the Art

In determining whether an invention would have been obvious at the time it was made, 35 U.S.C. § 103(a) requires us to resolve the level of ordinary skill in the pertinent art at the time of the invention. *Graham*, 383 U.S. at 17. The person of ordinary skill in the art is a hypothetical person who is presumed to have known the relevant art at the time of the invention. *In re GPAC Inc.*, 57 F.3d 1573, 1579 (Fed. Cir. 1995). Factors that may be considered in determining the level of ordinary skill in the art include, but are not limited to, the types of problems encountered in the art, the sophistication of the technology, and educational level of active workers in the field. *Id.* In a given case, one or more factors may predominate. *Id.*

Petitioner asserts that a person of ordinary skill in the art at the time of the alleged invention of the '357 patent:

> [W]ould have had a minimum of a bachelor's degree in computer engineering, computer science, electrical engineering, mechanical engineering, or a similar field, and approximately three years of industry or academic experience in a field related to acoustics, speech recognition, speech detection, or signal processing. . . . Work experience could substitute for formal education, and additional formal education could substitute for work experience.

Pet. 24 (citing Stern Decl. ¶¶ 27–28). Patent Owner utilizes Petitioner's proposed level of skill in the art "[f]or the purposes of this Preliminary Response only." Prelim. Resp. 7.

Petitioner's proposal is consistent with the level of ordinary skill in the art reflected by the asserted prior art. *See Okajima v. Bourdeau*, 261 F.3d 1350, 1355 (Fed. Cir. 2001); *GPAC*, 57 F.3d at 1579. On this record,

the level of ordinary skill is neither in dispute nor dispositive of any challenge. For purposes of this Decision, we apply Petitioner's articulation.

C. Claim Construction

The Petition was accorded a filing date of June 27, 2023. Paper 4, 1. In an *inter partes* review for a petition filed on or after November 13, 2018, a claim "shall be construed using the same claim construction standard that would be used to construe the claim in a civil action under 35 U.S.C. 282(b)." 37 C.F.R. § 42.100(b). We apply the claim construction standard from *Phillips v. AWH Corp.*, 415 F.3d 1303, 1312–13 (Fed. Cir. 2005) (en banc).

Claim terms need only be construed to the extent necessary to resolve the controversy. *Nidec Motor Corp. v. Zhongshan Broad Ocean Motor Co. Matal*, 868 F.3d 1013, 1017 (Fed. Cir. 2017).

The parties submit that no claim construction is necessary. Pet. 24–25; Prelim. Resp. 6. Therefore, we do not construe the claims.

D. Alleged Obviousness of Independent Claims 1 and 15 over Brandstein and Gannot

Petitioner challenges claims 1 and 15 as obvious over the combination of Brandstein and Gannot. Pet. 25–37, 61–65.

1. Brandstein (Ex. 1003)

Brandstein is a textbook titled "Microphone Arrays: Signal Processing Techniques And Applications," copyrighted 2001. Ex. 1003. Petitioner provides evidence that Brandstein is prior art under pre-AIA §102(b). Pet. 23 (citing Ex. 1013 ¶¶ 19–30; Stern Decl. ¶ 44). Patent Owner raises no issue at this time as to the prior art status of this reference, and we treat it as prior art for purposes of this Decision.

Brandstein discloses techniques for beamforming in microphone arrays with the "goal of speech enhancement . . . to remove undesirable signals such as noise and reverberation." Ex. 1003, 87. Figure 5.1 is block diagram reproduced below.

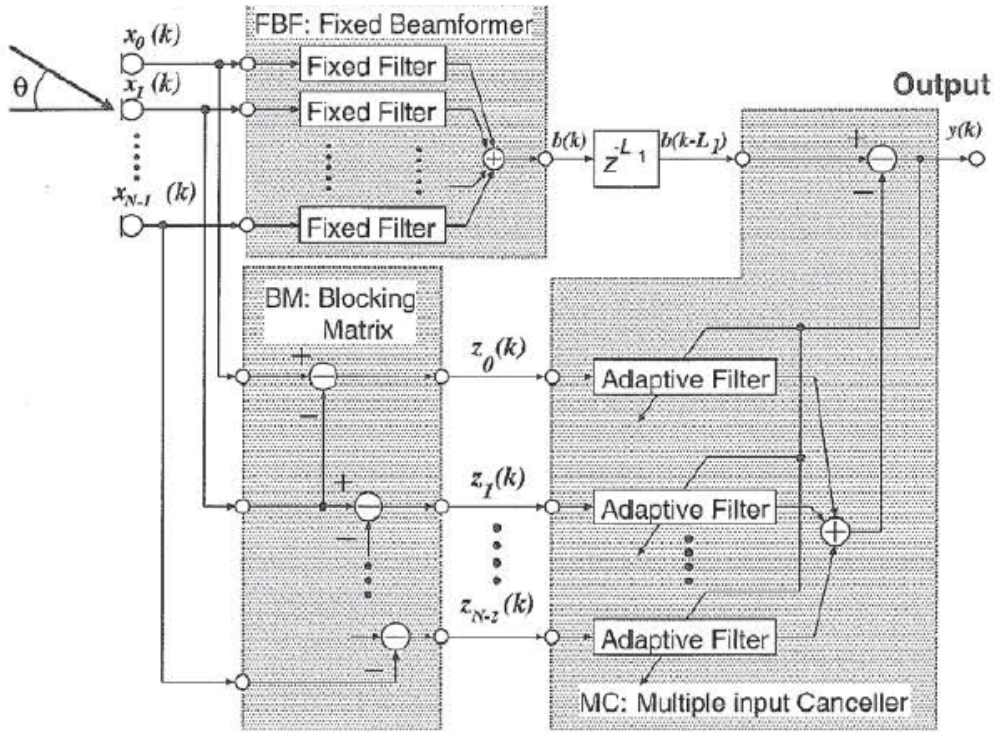

Fig. 5.1. Griffiths-Jim beamformer. It comprises a fixed beamformer (FBF), a multiple-input canceler (MC), and a blocking matrix (BM).

As indicated in the caption, Figure 5.1 is a "Griffiths-Jim beamformer," which is a reference to a January 1982 paper by Griffiths and Jim titled "An Alternative Approach to Linear Constrained Adaptive Beamforming." Ex. 1003, 108 (citation 27); Ex. 1005, 27; Stern Decl. ¶ 46. The upper portion of the figure depicts a fixed beamformer that filters and sums inputs from microphone array $x_0(k)$–$x_{N-1}(k)$ to generate an output representing a speech source (indicated as an arrow directed to the array at angle theta (θ)). Ex. 1003, 88; Stern Decl. ¶ 48. The lower portion of the figure depicts a blocking matrix and multiple input canceller that form a signal with a null in

the direction of the speech so that speech is suppressed and noise signals are passed through. Ex. 1003, 88; Stern Decl. ¶ 49. The output of the lower portion is subtracted for that of the upper portion to produce *y(k)*, in which speech "is enhanced and undesirable signals such as ambient noise and interferences are suppressed." Ex. 1003, 88–89; Stern Decl. ¶ 50.

2. Gannot (Ex. 1004)

Gannot is an article titled "Signal Enhancement Using Beamforming and Nonstationarity with Applications to Speech," included in the August 2001 issue of IEEE Transactions On NAL Processing. Ex. 1004, 1614. Petitioner provides evidence that Gannot is prior art under pre-AIA §102(b). Pet. 23 (citing Ex. 1013 ¶¶ 31–42). Patent Owner raises no issue at this time as to the prior art status of this reference, and we treat it as prior art for purposes of this Decision.

Gannot discloses sensor (*e.g.*, microphone) arrays "where arbitrary transfer functions (TFs) relate the source signal and the sensors." Ex. 1004, 1614. Like Brandstein, Gannot refers to the Griffiths-Jim beamformer, but modifies the approach to account for varying transfer functions. *Id.*; Stern Decl. ¶ 56. Figure 3 is a circuit diagram reproduced below.

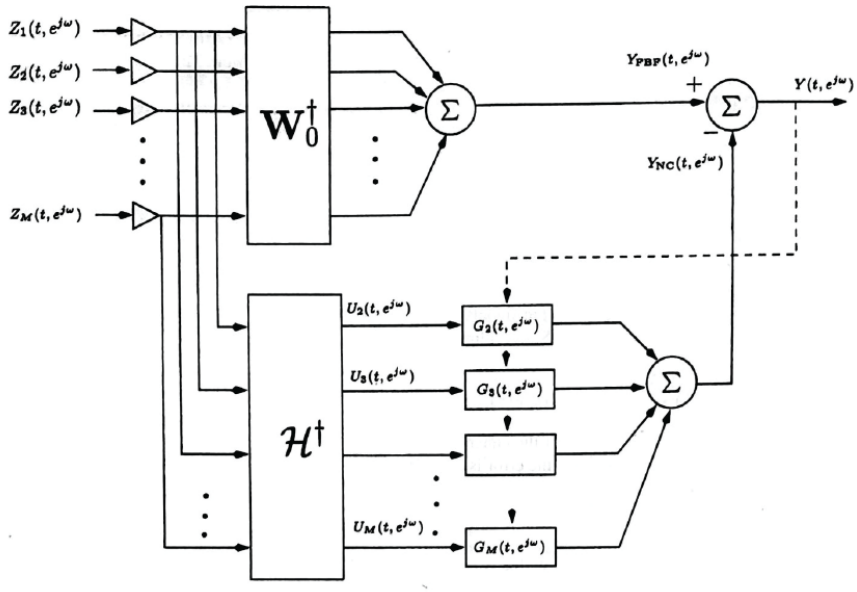

Fig. 3. Linearly constrained adaptive beamformer.

Figure 3 depicts a beamformer similar to that of Figure 5.1 of Brandstein, but the blocking matrix (indicated as $\mathcal{H}^\dagger$) uses estimates of time varying transfer function ratios of different sensors. Ex. 1004, 1615, 1618; Stern Decl. ¶¶ 57–61.

3. Petitioner's Challenge To Independent Claims 1 and 15

For the "device" preamble of independent claim 1, Petitioner generally relies on Brandstein's disclosure of a device with a microphone array and signal processing, including for use in a hearing aid or telephone. Pet. 25–26 (citing Ex. 1003, Figs. 5.1, 5.16, 87, 89, 104–105; Stern Decl. ¶ 85).[6]

For the "first virtual microphone" requirement of claim 1, Petitioner relies on the top portion of Figure 5.1 of Brandstein, as shown in the annotated version of that figure reproduced below.

[6] Based on the present record, we make no determination that the preamble of claim 1 (or of claim 15) is limiting.

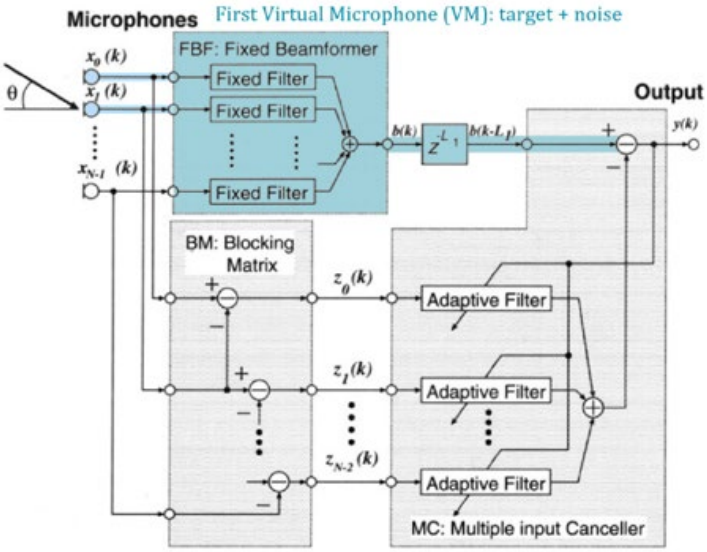

Pet. 26–27 (citing Ex. 1003, Fig. 5.1, 89; Stern Decl. ¶ 89). Petitioner associates $x_0(k)$ and $x_1(k)$ as the first and second microphones, with the first virtual microphone as the output of the filtering and summing of the inputs. *Id.*

For the "second virtual microphone" requirement of claim 1, Petitioner relies on the bottom portion of Figure 5.1 of Brandstein, as shown in the annotated version of that figure reproduced below.

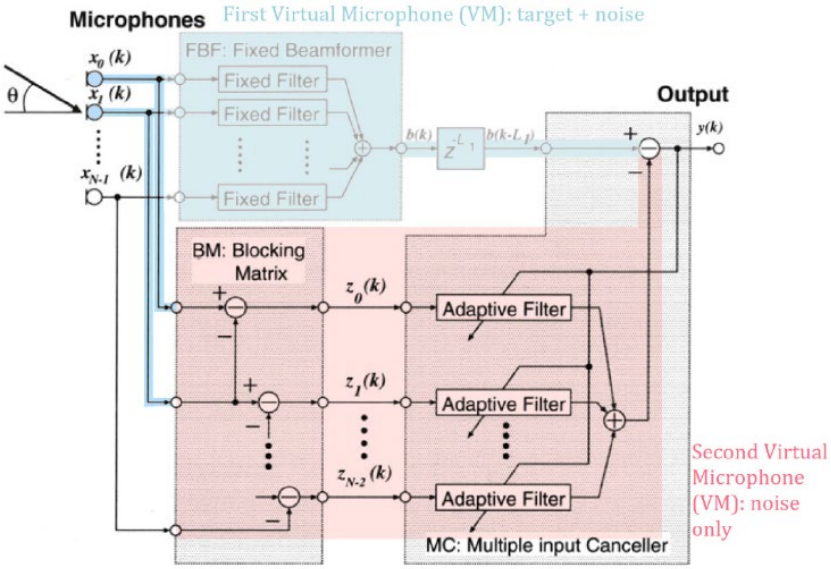

Pet. 27–28 (citing Ex. 1003, Fig. 5.1, 89; Stern Decl. ¶ 91). Regarding the requirement of "distinct virtual directional microphones with substantially similar responses to noise and substantially dissimilar responses to speech," Petitioner relies on Figure 5.2 of Brandstein, an annotated version of which is reproduced below.

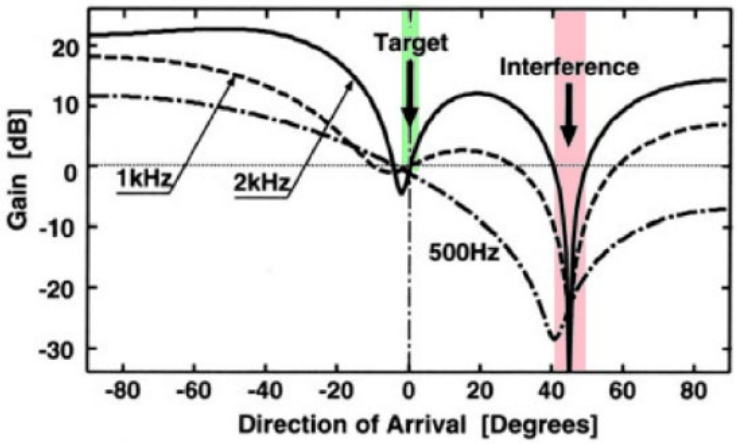

Fig. 5.2. Example directivity pattern of the Griffiths-Jim beamformer.

Pet. 28–30 (citing Ex. 1003, Fig. 5.2, 87–90, 101; Stern Decl. ¶¶ 94–97). Petitioner's declarant explains that the zero gain indicated for the "Target" (*i.e.*, speech) compared to the "deep null" for "Interference," discloses that the two virtual microphones are distinct, that their responses to noise are substantially similar (thus cancelling each other out as to noise), and that their responses to speech are substantially dissimilar (because no significant speech signal from the second virtual microphone is subtracted from the first virtual microphone signal). Stern Decl. ¶¶ 96–97.

For the "signal processor" requirement of claim 1, Petitioner relies on Figure 5.1 of Brandstein as showing the microphone signals being combined by filtering and summing in the time domain, as shown, for example, by the components labeled "Fixed Filter" in the upper portion of the figure, and the

component "⊕," indicating summation. Pet. 32 (citing Stern Decl. ¶ 100). Petitioner's declarant explains that the fact that the microphone signals are functions of discrete time "*k*" indicates that the operation is in the time domain. *Id.*

For the requirement that the signal processor is operative to "apply a varying linear transfer function between the first and second microphone signals," Petitioner relies on the disclosure in Gannot of a modified version of the Griffiths-Jim beamformer in which, in order to account for arbitrary acoustic paths, the blocking matrix uses ratios of varying transfer functions for the microphones. Pet. 33–35 (citing Ex. 1004, Figs. 3, 4, 1615–1620; Stern Decl. ¶¶ 105–106). Petitioner's declarant testifies that one of ordinary skill would have been motivated to combine the teachings of Brandstein and Gannot because Gannot proposed a modification of the original Griffiths-Jim beamformer which is also the basis for the pertinent disclosure in Brandstein, which modification would have allowed for a more robust accommodation of situations where the microphone transfer functions were varying. Stern Decl. ¶¶ 106, 110.

Finally, for the requirement that the signal processor is operative to "generate an output signal having noise content that is attenuated with respect to speech content," Petitioner relies on the disclosure in Brandstein that for the output $y(k)$, "the target signal is enhanced and undesirable signals such as ambient noise and interferences are suppressed." Pet. 36–37 (citing Ex. 1003, 88–89; Stern Decl. ¶ 109).

Independent claim 15 has the same requirements as claim 1, and in addition requires, "a virtual microphone array including the first and second virtual microphones and having a single null oriented in a direction toward a

source of speech." Ex. 1001, 36:8–32. For this additional requirement, Petitioner relies on Figure 5.3 of Brandstein, an annotated version of which is reproduced below.

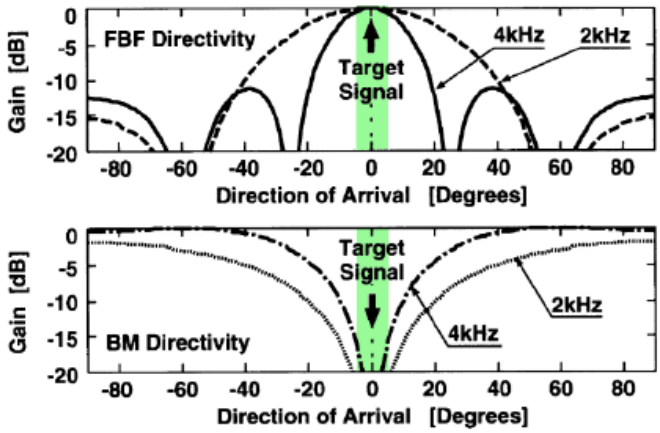

Fig. 5.3. Directivity pattern of a fixed beamformer (FBF) and a blocking matrix (BM).

Pet. 62–63 (citing Ex. 1003, Fig. 5.3, 90; Stern Decl. ¶ 161). Figure 5.3 shows the single null in the Blocking Matrix oriented towards the speech source. *Id.*

4. Patent Owner's Response To Petitioner's Challenge To Independent Claims 1 and 15

Patent Owner argues that Brandstein and Gannot do not render claims 1 or 15 obvious because the combination does not teach or suggest the independent claim 1 and claim 15 requirement, "wherein the first virtual microphone and the second virtual microphone are distinct virtual directional microphones with substantially similar responses to noise." Prelim. Resp. 8–14. Patent Owner notes that, for this claim requirement, Petitioner and its declarant, Dr. Stern, rely solely on Figure 5.2 of Brandstein, which depicts an example directivity pattern of a Griffiths-Jim

beamformer, and in particular shows a large negative gain in the direction of arrival of interference. Prelim. Resp. 12–13 (citing Pet. 29–30; Stern Decl. ¶¶ 95, 97). Petitioner and its declarant deduce that the large negative gain in the interference direction shown on Figure 5.2 "reflects that subtracting the two virtual microphones' outputs cancels the interference, which confirms that the virtual microphones' responses to the interference are essentially the same." Pet. 30 (citing Stern Decl. ¶ 97).

However, argues Patent Owner, the assumption that Figure 5.2 shows that the virtual microphones have similar responses to noise is unwarranted, because Figure 5.2 shows the overall directivity of an exemplary Griffiths-Jim beamformer, not the individual directivity of either virtual microphone, thus reflecting the overall result of the system in attenuating noise, rather than disclosing anything about the comparative responses to noise of the virtual microphones. Prelim. Resp. 12–13.

In addition, Patent Owner cites Brandstein's description of Figure 5.1, which is the structure that Figure 5.2 relates to, and which states:

> Figure 5.1 depicts the structure of the GJBF [Griffiths-Jim beamformer]. It comprises a fixed beamformer (FBF), a multiple-input canceler (MC), and a blocking matrix (BM). The FBF is designed to form a beam in the look direction so that the target signal is passed and all other signals are attenuated. On the contrary, the BM forms a null in the look direction so that the target signal is suppressed and all other signals are passed through.

Ex. 1003, 88 (cited at Prelim. Resp. 9–10). Patent Owner, relying on its declarant, argues that this excerpt demonstrates that the virtual microphones of Brandstein do not have "substantially similar responses to noise," because the fixed beamformer (which Petitioner associates with the first virtual

microphone of the claims) only passes the target signal (*i.e.*, voice) and attenuates all other signals (*i.e.*, noise), whereas the blocking matrix/multiple-input canceler combination (which Petitioner associates with the second virtual microphone) suppresses the target signal and passes through all other signals. Prelim. Resp. 10–11 (citing Ex. 2002 ¶¶ 42–43 (Declaration Of Akbar M. Sayeed, Ph.D.)).[7]

Patent Owner also relies on Figure 5.3 of Brandstein, reproduced below, with Patent Owner's annotations.

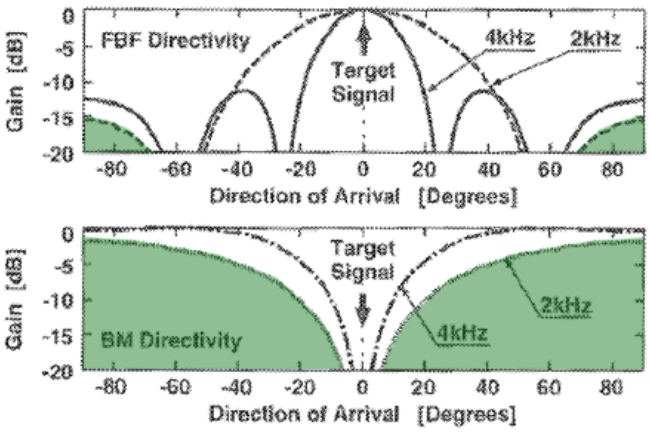

Fig. 5.3. Directivity pattern of a fixed beamformer (FBF) and a blocking matrix (BM).

The upper portion of Figure 5.3 depicts the directivity of the fixed beamformer of Figure 5.1, and the upper portion depicts the directivity of the blocking matrix. Prelim. Resp. 13 (citing Ex. 1003, Fig. 5.3, 90; Ex. 2002 ¶ 45). Patent Owner's declarant explains that shaded portions show that the noise responses of the two virtual microphones are not substantially similar. Ex. 2002 ¶ 45.

[7] The Preliminary Response erroneously cites the Sayeed declaration as Exhibit 2004. We understand that Exhibit 2002 is the intended citation.

As a separate issue, Patent Owner points out that the Brandstein reference is a collection of different papers by different authors, each reproduced as a chapter, and argues that Petitioner does not provide any reason why one of ordinary skill would have combined the teachings from the different papers in the manner that Petitioner relies on. Prelim. Resp. 14–18.

5. Analysis of Petitioner's Challenge To Independent Claims 1 and 15

We agree with Patent Owner that the record does not support Petitioner's assertion that Brandstein teaches or suggests the independent claim requirement, "wherein the first virtual microphone and the second virtual microphone are distinct virtual directional microphones with substantially similar responses to noise." Contrary to Petitioner's interpretation of Brandstein Figure 5.2, that figure does not lead to an inference that the individual microphone responses have similar responses to noise. Prelim. Resp. 12–13. In effect, Petitioner is arguing that knowing that the sum of two numbers is equal to "2" necessarily means that each number is "1", as opposed, for example, to one number being "2" and the other "0".

Moreover, as discussed above, Brandstein's description of Figure 5.1 demonstrates that the virtual microphones of Brandstein do not have "substantially similar responses to noise." Prelim. Resp. 9–11. Likewise, Figure 5. 3 of Brandstein also refutes Petitioner's assertion the virtual microphone noise responses are substantially similar. Prelim. Resp. 13.[8]

[8] We need not address Patent Owner's argument that Petitioner's reliance on different chapters of Brandstein is unjustified.

Accordingly, we determine that the Petition does not demonstrate a reasonable likelihood that Petitioner would prevail in establishing that independent claims 1 and 15 are unpatentable under 35 U.S.C. § 103(a) over the combination of Brandstein and Gannot.

E. Alleged Obviousness of Dependent Claims 2–14 and 16–20

Petitioner also challenges dependent claims 2–14 and 16–20 as obvious over the combination of Brandstein and Gannot. Pet. 37–61, 65–67. In addition, Petitioner challenges dependent claims 4, 13, 14, 18, and 19 as obvious over the combination of Brandstein, Gannot, and Griffiths-Jim, and also challenges dependent claims 4, 5, 6, 13, 14, 18, and 19 as obvious over the combination of Brandstein, Gannot, and McCowan. Pet. 67–72. Neither Griffiths-Jim nor McCowan are relied on for the above-discussed independent claim limitation, "wherein the first virtual microphone and the second virtual microphone are distinct virtual directional microphones with substantially similar responses to noise." *See id.*

Accordingly, given that claims 2–14 and 16–20 depend from independent claims 1 or 15, and given our determination with respect to the independent claims as set forth above, we determine that the Petition does not demonstrate a reasonable likelihood that Petitioner would prevail in establishing that claims 2–15 and 16–20 are obvious over the combination of Brandstein and Gannot, that claims 4, 13, 14, 18, and 19 are obvious over the combination of Brandstein, Gannot, or that claims 4, 5, 6, 13, 14, 18, and 19 are obvious over the combination of Brandstein, Gannot, and McCowan.

IV. ORDER

In consideration of the foregoing, it is hereby:

ORDERED that Petitioner's Unopposed Motion To Withdraw Motion For Joinder is granted; and

FURTHER ORDERED that the Petition is denied and no *inter partes* review is instituted.

For PETITIONER:

Lisa Nguyen
David Tennant
Alan Billharz
Colby Davis
Grace Wang
ALLEN & OVERY LLP
lisa.nguyen@allenovery.com
david.tennant@allenovery.com
alan.billharz@allenovery.com
colby.davis@allenovery.com
grace.wang@allenovery.com

For PATENT OWNER:

Peter Lambrianakos
Vincent J. Rubino, III
Enrique W. Iturralde
Richard Cowell
Jacob Ostling
FABRICANT LLP
plambrianakos@fabricantllp.com
vrubino@fabricantllp.com
eiturralde@fabricantllp.com
rcowell@fabricantllp.com
jostling@fabricantllp.com