US008194880B2

(12) **United States Patent**
Avendano

(10) **Patent No.: US 8,194,880 B2**
(45) **Date of Patent: Jun. 5, 2012**

(54) **SYSTEM AND METHOD FOR UTILIZING OMNI-DIRECTIONAL MICROPHONES FOR SPEECH ENHANCEMENT**

(75) Inventor: **Carlos Avendano**, Mountain View, CA (US)

(73) Assignee: **Audience, Inc.**, Mountain View, CA (US)

(*) Notice: Subject to any disclaimer, the term of this patent is extended or adjusted under 35 U.S.C. 154(b) by 1384 days.

(21) Appl. No.: **11/699,732**

(22) Filed: **Jan. 29, 2007**

(65) **Prior Publication Data**

US 2008/0019548 A1 Jan. 24, 2008

Related U.S. Application Data

(63) Continuation-in-part of application No. 11/343,524, filed on Jan. 30, 2006.

(60) Provisional application No. 60/850,928, filed on Oct. 10, 2006.

(51) **Int. Cl.**
H04R 3/00 (2006.01)

(52) **U.S. Cl.** **381/92**; 381/94.1; 381/94.2; 381/94.3; 381/94.7; 381/122; 704/226; 704/227; 704/233; 704/275

(58) **Field of Classification Search** 381/313, 381/312, 91, 92, 122, 95, 110, 94.1, 94.2, 381/94.3, 94.7; 704/226, 227, 233, 275
See application file for complete search history.

(56) **References Cited**

U.S. PATENT DOCUMENTS

3,976,863	A	8/1976	Engel
3,978,287	A	8/1976	Fletcher et al.
4,137,510	A	1/1979	Iwahara
4,433,604	A	2/1984	Ott
4,516,259	A	5/1985	Yato et al.
4,535,473	A	8/1985	Sakata

(Continued)

FOREIGN PATENT DOCUMENTS

JP	62110349	5/1987

(Continued)

OTHER PUBLICATIONS

Marc Moonen et al. "Multi-Microphone Signal Enhancement Techniques for Noise Suppression and Dereverberation," source(s): http://www.esat.kuleuven.ac.be/sista/yearreport97/node37.html.

Steven Boll et al. "Suppression of Acoustic Noise in Speech Using Two Microphone Adaptive Noise Cancellation", source(s): IEEE Transactions on Acoustic, Speech, and Signal Processing. vol. v ASSP-28, n 6, Dec. 1980, pp. 752-753.

(Continued)

Primary Examiner — Vivian Chin
Assistant Examiner — Paul Kim
(74) *Attorney, Agent, or Firm* — Carr & Ferrell LLP

(57) **ABSTRACT**

Systems and methods for utilizing inter-microphone level differences (ILD) to attenuate noise and enhance speech are provided. In exemplary embodiments, primary and secondary acoustic signals are received by omni-directional microphones, and converted into primary and secondary electric signals. A differential microphone array module processes the electric signals to determine a cardioid primary signal and a cardioid secondary signal. The cardioid signals are filtered through a frequency analysis module which takes the signals and mimics a cochlea implementation (i.e., cochlear domain). Energy levels of the signals are then computed, and the results are processed by an ILD module using a non-linear combination to obtain the ILD. In exemplary embodiments, the non-linear combination comprises dividing the energy level associated with the primary microphone by the energy level associated with the secondary microphone. The ILD is utilized by a noise reduction system to enhance the speech of the primary acoustic signal.

28 Claims, 9 Drawing Sheets

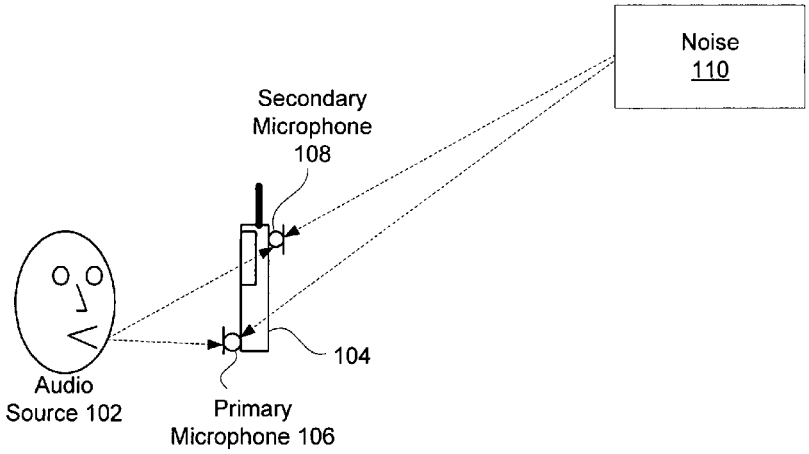

GOOGLE EXHIBIT 1005

U.S. PATENT DOCUMENTS

4,536,844	A	8/1985	Lyon
4,581,758	A	4/1986	Coker et al.
4,628,529	A	12/1986	Borth et al.
4,630,304	A	12/1986	Borth et al.
4,649,505	A	3/1987	Zinser, Jr. et al.
4,658,426	A	4/1987	Chabries et al.
4,674,125	A	6/1987	Carlson et al.
4,718,104	A	1/1988	Anderson
4,811,404	A	3/1989	Vilmur et al.
4,812,996	A	3/1989	Stubbs
4,864,620	A	9/1989	Bialick
4,920,508	A	4/1990	Yassaie et al.
5,027,410	A	6/1991	Williamson et al.
5,054,085	A	10/1991	Meisel et al.
5,058,419	A	10/1991	Nordstrom et al.
5,099,738	A	3/1992	Hotz
5,119,711	A	6/1992	Bell et al.
5,142,961	A	9/1992	Paroutaud
5,150,413	A	9/1992	Nakatani et al.
5,175,769	A	12/1992	Hejna, Jr. et al.
5,187,776	A	2/1993	Yanker
5,208,864	A	5/1993	Kaneda
5,210,366	A	5/1993	Sykes, Jr.
5,224,170	A	6/1993	Waite, Jr.
5,230,022	A	7/1993	Sakata
5,319,736	A	6/1994	Hunt
5,323,459	A	6/1994	Hirano
5,341,432	A	8/1994	Suzuki et al.
5,381,473	A	1/1995	Andrea et al.
5,381,512	A	1/1995	Holton et al.
5,400,409	A	3/1995	Linhard
5,402,493	A	3/1995	Goldstein
5,402,496	A	3/1995	Soli et al.
5,471,195	A	11/1995	Rickman
5,473,702	A	12/1995	Yoshida et al.
5,473,759	A	12/1995	Slaney et al.
5,479,564	A	12/1995	Vogten et al.
5,502,663	A	3/1996	Lyon
5,544,250	A	8/1996	Urbanski
5,574,824	A	11/1996	Slyh et al.
5,583,784	A	12/1996	Kapust et al.
5,587,998	A	12/1996	Velardo, Jr. et al.
5,590,241	A	12/1996	Park et al.
5,602,962	A	2/1997	Kellermann
5,675,778	A	10/1997	Jones
5,682,463	A	10/1997	Allen et al.
5,694,474	A	12/1997	Ngo et al.
5,706,395	A	1/1998	Arslan et al.
5,717,829	A	2/1998	Takagi
5,729,612	A	3/1998	Abel et al.
5,732,189	A	3/1998	Johnston et al.
5,749,064	A	5/1998	Pawate et al.
5,757,937	A	5/1998	Itoh et al.
5,792,971	A	8/1998	Timis et al.
5,796,819	A	8/1998	Romesburg
5,806,025	A	9/1998	Vis et al.
5,809,463	A	9/1998	Gupta et al.
5,825,320	A	10/1998	Miyamori et al.
5,839,101	A	11/1998	Vahatalo et al.
5,920,840	A	7/1999	Satyamurti et al.
5,933,495	A	8/1999	Oh
5,943,429	A	8/1999	Handel
5,956,674	A	9/1999	Smyth et al.
5,974,380	A	10/1999	Smyth et al.
5,978,824	A	11/1999	Ikeda
5,983,139	A	11/1999	Zierhofer
5,990,405	A	11/1999	Auten et al.
6,002,776	A	12/1999	Bhadkamkar et al.
6,061,456	A	5/2000	Andrea et al.
6,072,881	A	6/2000	Linder
6,097,820	A	8/2000	Turner
6,108,626	A	8/2000	Cellario et al.
6,122,610	A	9/2000	Isabelle
6,134,524	A	10/2000	Peters et al.
6,137,349	A	10/2000	Menkhoff et al.
6,140,809	A	10/2000	Doi
6,173,255	B1	1/2001	Wilson et al.
6,180,273	B1	1/2001	Okamoto
6,216,103	B1	4/2001	Wu et al.
6,222,927	B1	4/2001	Feng et al.
6,223,090	B1	4/2001	Brungart
6,226,616	B1	5/2001	You et al.
6,263,307	B1	7/2001	Arslan et al.
6,266,633	B1	7/2001	Higgins et al.
6,317,501	B1	11/2001	Matsuo
6,339,758	B1	1/2002	Kanazawa et al.
6,355,869	B1	3/2002	Mitton
6,363,345	B1	3/2002	Marash et al.
6,381,570	B2	4/2002	Li et al.
6,430,295	B1	8/2002	Handel et al.
6,434,417	B1	8/2002	Lovett
6,449,586	B1	9/2002	Hoshuyama
6,469,732	B1	10/2002	Chang et al.
6,487,257	B1	11/2002	Gustafsson et al.
6,496,795	B1	12/2002	Malvar
6,513,004	B1	1/2003	Rigazio et al.
6,516,066	B2	2/2003	Hayashi
6,529,606	B1	3/2003	Jackson, Jr. II et al.
6,549,630	B1	4/2003	Bobisuthi
6,584,203	B2	6/2003	Elko et al.
6,622,030	B1	9/2003	Romesburg et al.
6,717,991	B1	4/2004	Gustafsson et al.
6,718,309	B1	4/2004	Selly
6,738,482	B1	5/2004	Jaber
6,760,450	B2	7/2004	Matsuo
6,785,381	B2	8/2004	Gartner et al.
6,792,118	B2	9/2004	Watts
6,795,558	B2	9/2004	Matsuo
6,798,886	B1	9/2004	Smith et al.
6,810,273	B1	10/2004	Mattila et al.
6,882,736	B2	4/2005	Dickel et al.
6,915,264	B2	7/2005	Baumgarte
6,917,688	B2	7/2005	Yu et al.
6,944,510	B1	9/2005	Ballesty et al.
6,978,159	B2	12/2005	Feng et al.
6,982,377	B2	1/2006	Sakurai et al.
6,999,582	B1	2/2006	Popovic et al.
7,016,507	B1	3/2006	Brennan
7,020,605	B2	3/2006	Gao
7,031,478	B2	4/2006	Belt et al.
7,054,452	B2	5/2006	Ukita
7,065,485	B1	6/2006	Chong-White et al.
7,076,315	B1	7/2006	Watts
7,092,529	B2	8/2006	Yu et al.
7,092,882	B2	8/2006	Arrowood et al.
7,099,821	B2	8/2006	Visser et al.
7,142,677	B2	11/2006	Gonopolskiy
7,146,316	B2	12/2006	Alves
7,155,019	B2	12/2006	Hou
7,164,620	B2	1/2007	Hoshuyama
7,171,008	B2	1/2007	Elko
7,171,246	B2	1/2007	Mattila et al.
7,174,022	B1	2/2007	Zhang et al.
7,206,418	B2	4/2007	Yang et al.
7,209,567	B1	4/2007	Kozel et al.
7,225,001	B1	5/2007	Eriksson et al.
7,242,762	B2	7/2007	He et al.
7,246,058	B2	7/2007	Burnett
7,254,242	B2	8/2007	Ise et al.
7,359,520	B2	4/2008	Brennan et al.
7,412,379	B2	8/2008	Taori et al.
7,433,907	B2	10/2008	Nagai et al.
7,555,434	B2	6/2009	Nomura et al.
7,949,522	B2	5/2011	Hetherington et al.
2001/0016020	A1	8/2001	Gustafsson et al.
2001/0031053	A1	10/2001	Feng et al.
2002/0002455	A1	1/2002	Accardi et al.
2002/0009203	A1	1/2002	Erten
2002/0041693	A1	4/2002	Matsuo
2002/0080980	A1	6/2002	Matsuo
2002/0106092	A1	8/2002	Matsuo
2002/0116187	A1	8/2002	Erten
2002/0133334	A1	9/2002	Coorman et al.
2002/0147595	A1	10/2002	Baumgarte
2002/0184013	A1	12/2002	Walker
2003/0014248	A1	1/2003	Vetter
2003/0026437	A1	2/2003	Janse et al.

2003/0033140	A1	2/2003	Taori et al.	
2003/0039369	A1	2/2003	Bullen	
2003/0040908	A1	2/2003	Yang et al.	
2003/0061032	A1	3/2003	Gonopolskiy	
2003/0063759	A1	4/2003	Brennan et al.	
2003/0072382	A1	4/2003	Raleigh et al.	
2003/0072460	A1	4/2003	Gonopolskiy et al.	
2003/0095667	A1	5/2003	Watts	
2003/0099345	A1	5/2003	Gartner et al.	
2003/0101048	A1	5/2003	Liu	
2003/0103632	A1	6/2003	Goubran et al.	
2003/0128851	A1	7/2003	Furuta	
2003/0138116	A1	7/2003	Jones et al.	
2003/0147538	A1*	8/2003	Elko	381/92
2003/0169891	A1*	9/2003	Ryan et al.	381/92
2003/0228023	A1	12/2003	Burnett et al.	
2004/0013276	A1	1/2004	Ellis et al.	
2004/0047464	A1	3/2004	Yu et al.	
2004/0057574	A1	3/2004	Faller	
2004/0078199	A1	4/2004	Kremer et al.	
2004/0131178	A1	7/2004	Shahaf et al.	
2004/0133421	A1	7/2004	Burnett et al.	
2004/0165736	A1	8/2004	Hetherington et al.	
2004/0196989	A1	10/2004	Friedman et al.	
2004/0263636	A1	12/2004	Cutler et al.	
2005/0025263	A1	2/2005	Wu	
2005/0027520	A1	2/2005	Mattila et al.	
2005/0049864	A1	3/2005	Kaltenmeier et al.	
2005/0060142	A1	3/2005	Visser et al.	
2005/0152559	A1	7/2005	Gierl et al.	
2005/0185813	A1	8/2005	Sinclair et al.	
2005/0213778	A1	9/2005	Buck et al.	
2005/0216259	A1	9/2005	Watts	
2005/0228518	A1	10/2005	Watts	
2005/0276423	A1	12/2005	Aubauer et al.	
2005/0288923	A1	12/2005	Kok	
2006/0072768	A1	4/2006	Schwartz et al.	
2006/0074646	A1	4/2006	Alves et al.	
2006/0098809	A1	5/2006	Nongpiur et al.	
2006/0120537	A1	6/2006	Burnett et al.	
2006/0133621	A1	6/2006	Chen et al.	
2006/0149535	A1	7/2006	Choi et al.	
2006/0184363	A1	8/2006	McCree et al.	
2006/0198542	A1	9/2006	Benjelloun Touimi et al.	
2006/0222184	A1	10/2006	Buck et al.	
2007/0021958	A1	1/2007	Visser et al.	
2007/0027685	A1	2/2007	Arakawa et al.	
2007/0033020	A1	2/2007	Francois et al.	
2007/0067166	A1	3/2007	Pan et al.	
2007/0078649	A1	4/2007	Hetherington et al.	
2007/0094031	A1	4/2007	Chen	
2007/0100612	A1	5/2007	Ekstrand et al.	
2007/0116300	A1	5/2007	Chen	
2007/0150268	A1	6/2007	Acero et al.	
2007/0154031	A1	7/2007	Avendano et al.	
2007/0165879	A1	7/2007	Deng et al.	
2007/0195968	A1	8/2007	Jaber	
2007/0230712	A1	10/2007	Belt et al.	
2007/0276656	A1	11/2007	Solbach et al.	
2008/0033723	A1	2/2008	Jang et al.	
2008/0140391	A1	6/2008	Yen et al.	
2008/0201138	A1	8/2008	Visser et al.	
2008/0228478	A1	9/2008	Hetherington et al.	
2008/0260175	A1	10/2008	Elko	
2009/0012783	A1	1/2009	Klein	
2009/0012786	A1	1/2009	Zhang et al.	
2009/0129610	A1	5/2009	Kim et al.	
2009/0220107	A1	9/2009	Every et al.	
2009/0238373	A1	9/2009	Klein	
2009/0253418	A1	10/2009	Makinen	
2009/0271187	A1	10/2009	Yen et al.	
2009/0323982	A1	12/2009	Solbach et al.	
2010/0094643	A1	4/2010	Avendano et al.	
2010/0278352	A1	11/2010	Petit et al.	
2011/0178800	A1	7/2011	Watts	

FOREIGN PATENT DOCUMENTS

JP	04184400	7/1992
JP	5053587	3/1993
JP	05-172865	7/1993
JP	06269083	9/1994
JP	10-313497	11/1998
JP	11-249693	9/1999
JP	2004053895	2/2004
JP	2004531767	10/2004
JP	2004533155	10/2004
JP	2005110127	4/2005
JP	2005148274	6/2005
JP	2005518118	6/2005
JP	2005195955	7/2005
WO	01/74118	10/2001
WO	02080362	10/2002
WO	02103676	12/2002
WO	03/043374	5/2003
WO	03/069499	8/2003
WO	2003069499	8/2003
WO	2004/010415	1/2004
WO	2007/081916	7/2007
WO	2007/140003	12/2007
WO	2010/005493	1/2010

OTHER PUBLICATIONS

Chen Liu et al. "A two-microphone dual delay-line approach for extraction of a speech sound in the presence of multiple interferers", source(s): Acoustical Society of America. vol. 110, Dec. 6, 2001, pp. 3218-3231.

Cohen et al. "Microphone Array Post-Filtering for Non-Stationary Noise", source(s): IEEE. May 2002.

Jingdong Chen et al. "New Insights into the Noise Reduction Wiener Filter", source(s): IEEE Transactions on Audio, Speech, and Langauge Processing. vol. 14, Jul. 4, 2006, pp. 1218-1234.

Rainer Martin et al. "Combined Acoustic Echo Cancellation, Dereverberation and Noise Reduction: A two Microphone Approach", source(s): Annales des Telecommunications/Annals of Telecommunications. vol. 29, Jul. 7-8-Aug. 1994, pp. 429-438.

Mitsunori Mizumachi et al. "Noise Reduction by Paired-Microphones Using Spectral Subtraction", source(s): 1998 IEEE. pp. 1001-1004.

Lucas Parra et al. "Convolutive blind Separation of Non-Stationary", source(s): IEEE Transactions on Speech and Audio Processing. vol. 8, May 3, 2008, pp. 320-327.

Isreal Cohen. "Multichannel Post-Filtering in Nonstationary Noise Environment", source(s): IEEE Transactions on Signal Processing. vol. 52, May 5, 2004, pp. 1149-1160.

R.A. Goubran. "Acoustic Noise Suppression Using Regressive Adaptive Filtering", source(s): 1990 IEEE. pp. 48-53.

Ivan Tashev et al. "Microphone Array of Headset with Spatial Noise Suppressor", source(s): http://research.microsoft.com/users/ivantash/Documents/Tashev_MAforHeadset_HSCMA_05.pdf. (4 pages).

Martin Fuchs et al. "Noise Suppression for Automotive Applications Based on Directional Information", source(s): 2004 IEEE. pp. 237-240.

Jean-Marc Valin et al. "Enhanced Robot Audition Based on Microphone Array Source Separation with Post-Filter", source(s): Proceedings of 2004 IEEE/RSJ International Conference on Intelligent Robots and Systems, Sep. 28-Oct. 2, 2004, Sendai, Japan. pp. 2123-2128.

Jont B. Allen. "Short Term Spectral Analysis, Synthesis, and Modification by Discrete Fourier Transform", IEEE Transactions on Acoustics, Speech, and Signal Processing. vol. ASSP-25, Jun. 3, 1977. pp. 235-238.

Jont B. Allen et al. "A Unified Approach to Short-Time Fourier Analysis and Synthesis", Proceedings of the IEEE. vol. 65, Nov. 11, 1977. pp. 1558-1564.

C. Avendano, "Frequency-Domain Techniques for Source Identification and Manipulation in Stereo Mixes for Enhancement, Suppression and Re-Panning Applications," in Proc. IEEE Workshop on Application of Signal Processing to Audio and Acoustics, Waspaa, 03, New Paltz, NY, 2003.

B. Widrow et al., "Adaptive Antenna Systems," Proceedings IEEE, vol. 55, No. 12, pp. 2143-2159, Dec. 1967.

Avendano, Carlos, "Frequency-Domain Source Identification and Manipulation in Stereo Mixes for Enhancement, Suppression and Re-panning Applications," 2003 IEEE Workshop on Applications of Signal Processing to Audio and Acoustics, Oct. 19-22, 2003, pp. 55-58, New Peitz, New York, USA.
Widrow, B. et al., "Adaptive Atenna Systems," Dec. 1967, pp. 2143-2159, vol. 55 No. 12, Proceedings of the IEEE.
Elko, Gary W., "Differential Microphone Arrays," Audio Signal Processing for Next-Generation Multimedia Communication Systems, 2004, pp. 12-65, Kluwer Academic Publishers, Norwell, Massachusetts, USA.
Boll, Steven F. "Suppression of Acoustic Noise in Speech using Spectral Subtraction", IEEE Transactions on Acoustics, Speech and Signal Processing, vol. ASSP-27, No. 2, Apr. 1979, pp. 113-120.
Boll, Steven F. "Suppression of Acoustic Noise in Speech Using Spectral Subtraction", Dept. of Computer Science, University of Utah Salt Lake City, Utah, Apr. 1979, pp. 18-19.
Dahl, Mattias et al., "Simultaneous Echo Cancellation and Car Noise Suppression Employing a Microphone Array", 1997 IEEE International Conference on Acoustics, Speech, and Signal Processing, Apr. 21-24, pp. 239-242.
"ENT 172." Instructional Module. Prince George's Community College Department of Engineering Technology. Accessed: Oct. 15, 2011. Subsection: "Polar and Rectangular Notation". <http://academic.ppgcc.edu/ent/ent172_instr_mod.html>.
Fulghum, D. P. et al., "LPC Voice Digitizer with Background Noise Suppression", 1979 IEEE International Conference on Acoustics, Speech, and Signal Processing, pp. 220-223.
Graupe, Daniel et al., "Blind Adaptive Filtering of Speech from Noise of Unknown Spectrum Using a Virtual Feedback Configuration", IEEE Transactions on Speech and Audio Processing, Mar. 2000, vol. 8, No. 2, pp. 146-158.
Haykin, Simon et al. "Appendix A.2 Complex Numbers." Signals and Systems. 2nd Ed. 2003. p. 764.
Hermansky, Hynek "Should Recognizers Have Ears?", in Proc. ESCA Tutorial and Research Workshop on Robust Speech Recognition for Unknown Communication Channels, pp. 1-10, France 1997.
Hohmann, V. "Frequency Analysis and Synthesis Using a Garnmatone Filterbank", ACTA Acustica United with Acustica, 2002, vol. 88, pp. 433-442.
Jeffress, Lloyd A. et al. "A Place Theory of Sound Localizcion," Journal of Comparative and Physiological Psychology, 1948, vol. 41, p. 35-39.
Jeong, Hyuk et al., "Implementation of a New Algorithm Using the STFT with Variable Frequency Resolution for the Time-Frequency Auditory Model", J. Audio Eng. Soc., Apr. 1999, vol. 47, No. 4., pp. 240-251.
Kates, James M. "A Time-Domain Digital Cochlear Model", IEEE Transactions on Signal Processing, Dec. 1991, vol. 39, No. 12, pp. 2573-2592.
Lazzaro, John et al., "A Silicon Model of Auditory Localization," Neural Computation Spring 1989, vol. 1, pp. 47-57, Massachusetts Institute of Technology.
Lippmann, Richard P. "Speech Recognition by Machines and Humans", Speech Communication, Jul. 1997, vol. 22, No. 1, pp. 1-15.
Martin, Rainer "Spectral Subtraction Based on Minimum Statistics", in Proceedings Europe. Signal Processing Conf., 1994, pp. 1182-1185.
Mitra, Sanjit K. Digital Signal Processing: a Computer-based Approach. 2nd Ed. 2001. pp. 131-133.
Watts, Lloyd Narrative of Prior Disclosure of Audio Display on Feb. 15, 2000 and May 31, 2000.
Cosi, Piero et al. (1996), "Lyon's Auditory Model Inversion: a Tool for Sound Separation and Speech Enhancement," Proceedings of ESCA Workshop on 'The Auditory Basis of Speech Perception,' Keele University, Keele (UK), Jul. 15-19, 1996, pp. 194-197.
Rabiner, Lawrence R. et al. "Digital Processing of Speech Signals", (Prentice-Hall Series in Signal Processing). Upper Saddle River, NJ: Prentice Hall, 1978.
Weiss, Ron et al., "Estimating Single-Channel Source Separation Masks: Revelance Vector Machine Classifiers vs. Pitch-Based Masking", Workshop on Statistical and Perceptual Audio Processing, 2006.
Schimmel, Steven et al., "Coherent Envelope Detection for Modulation Filtering of Speech," 2005 IEEE International Conference on Acoustics, Speech, and Signal Processing, vol. 1, No. 7, pp. 221-224.
Slaney, Malcom, "Lyon's Cochlear Model", Advanced Technology Group, Apple Technical Report #13, Apple Computer, Inc., 1988, pp. 1-79.
Slaney, Malcom, et al. "Auditory Model Inversion for Sound Separation," 1994 IEEE International Conference on Acoustics, Speech and Signal Processing, Apr. 19-22, vol. 2, pp. 77-80.
Slaney, Malcom. "An Introduction to Auditory Model Inversion", Interval Technical Report IRC 1994-014, http://coweb.ecn.purdue.edu/~maclom/interval/1994-014/, Sep. 1994, accessed on Jul. 6, 2010.
Solbach, Ludger "An Architecture for Robust Partial Tracking and Onset Localization in Single Channel Audio Signal Mixes", Technical University Hamburg-Harburg, 1998.
Stahl, V. et al., "Quantile Based Noise Estimation for Spectral Subtraction and Wiener Filtering," 2000 IEEE International Conference on Acoustics, Speech, and Signal Processing, Jun. 5-9, vol. 3, pp. 1875-1878.
Syntrillium Software Corporation, "Cool Edit Users Manual", 1996, pp. 1-74.
Tchorz, Jurgen et al., "SNR Estimation Based on Amplitude Modulation Analysis with Applications to Noise Suppression", IEEE Transactions on Speech and Audio Processing, vol. 11, No. 3, May 2003, pp. 184-192.
Watts, Lloyd, "Robust Hearing Systems for Intelligent Machines," Applied Neurosystems Corporation, 2001, pp. 1-5.
Yoo, Heejong et al., "Continuous-Time Audio Noise Suppression and Real-Time Implementation", 2002 IEEE International Conference on Acoustics, Speech, and Signal Processing, May 13-17, pp. IV3980-1V3983.
International Search Report dated Jun. 8, 2001 in Application No. PCT/US01/08372.
International Search Report dated Apr. 3, 2003 in Application No. PCT/US02/36946.
International Search Report dated May 29, 2003 in Application No. PCT/US03/04124.
International Search Report and Written Opinion dated Oct. 19, 2007 in Application No. PCT/US07/00463.
International Search Report and Written Opinion dated Apr. 9, 2008 in Application No. PCT/US07/21654.
International Search Report and Written Opinion dated Sep. 16, 2008 in Application No. PCT/US07/12628.
International Search Report and Written Opinion dated Oct. 1, 2008 in Application No. PCT/US08/08249.
International Search Report and Written Opinion dated May 11, 2009 in Application No. PCT/US09/01667.
International Search Report and Written Opinion dated Aug. 27, 2009 in Application No. PCT/US09/03813.
International Search Report and Written Opinion dated May 20, 2010 in Application No. PCT/US09/06754.
Fast Cochlea Transform, US Trademark Reg. No. 2,875,755 (Aug. 17, 2004).
Dahl, Mattias et al., "Acoustic Echo and Noise Cancelling Using Microphone Arrays", International Symposium on Signal Processing and its Applications, ISSPA, Gold coast, Australia, Aug. 25-30, 1996, pp. 379-382.
Demol, M. et al. "Efficient Non-Uniform Time-Scaling of Speech With WSOLA for CALL Applications", Proceedings of InSTIL/ICALL2004—NLP and Speech Technologies in Advanced Language Learning Systems—Venice Jun. 17-19, 2004.
Laroche, Jean. "Time and Pitch Scale Modification of Audio Signals", in "Applications of Digital Signal Processing to Audio and Acoustics", The Kluwer International Series in Engineering and Computer Science, vol. 437, pp. 279-309, 2002.
Moulines, Eric et al., "Non-Parametric Techniques for Pitch-Scale and Time-Scale Modification of Speech", Speech Communication, vol. 16, pp. 175-205, 1995.
Verhelst, Werner, "Overlap-Add Methods for Time-Scaling of Speech", Speech Communication vol. 30, pp. 207-221, 2000.

* cited by examiner

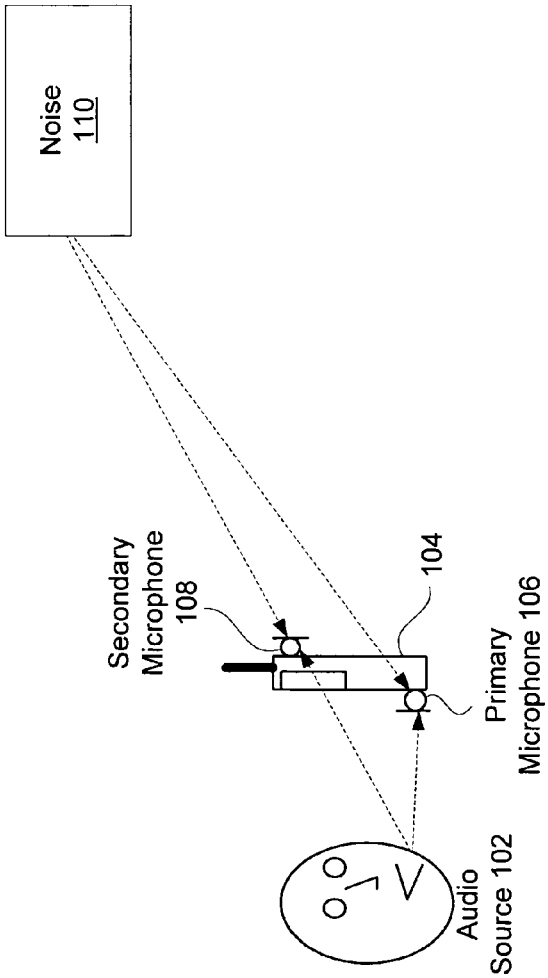
Noise
110
Secondary
Microphone
108
104
Primary
Microphone 106
Audio
Source 102

FIG. 1a

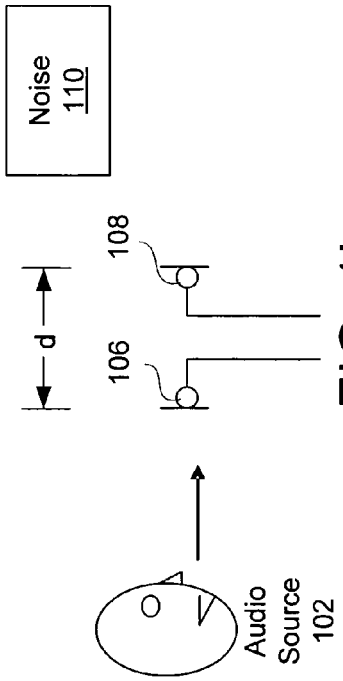
Noise
110
d
108
106
Audio
Source
102

FIG. 1b

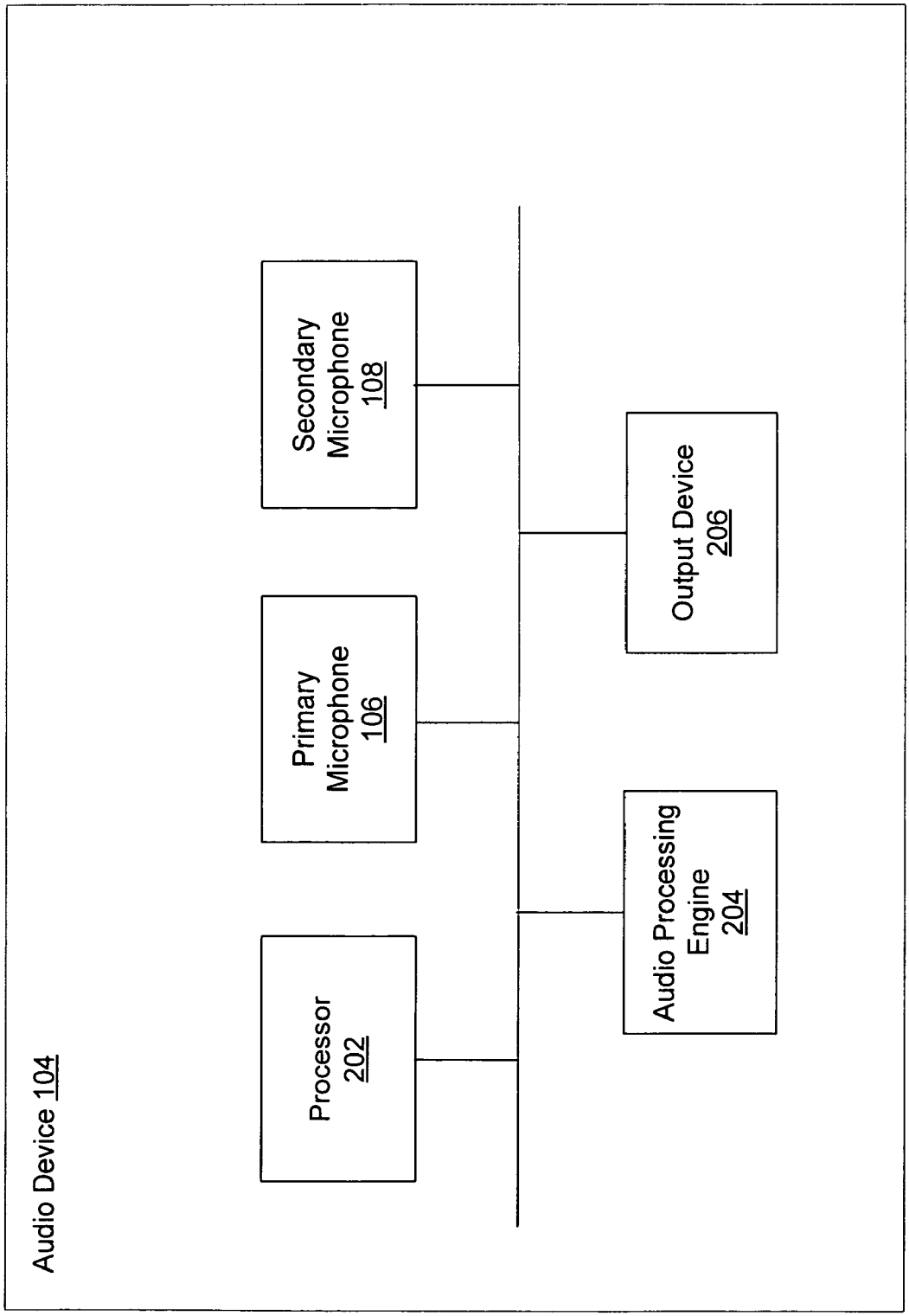
Audio Device 104
Processor 202
Primary Microphone 106
Secondary Microphone 108
Audio Processing Engine 204
Output Device 206

FIG. 2

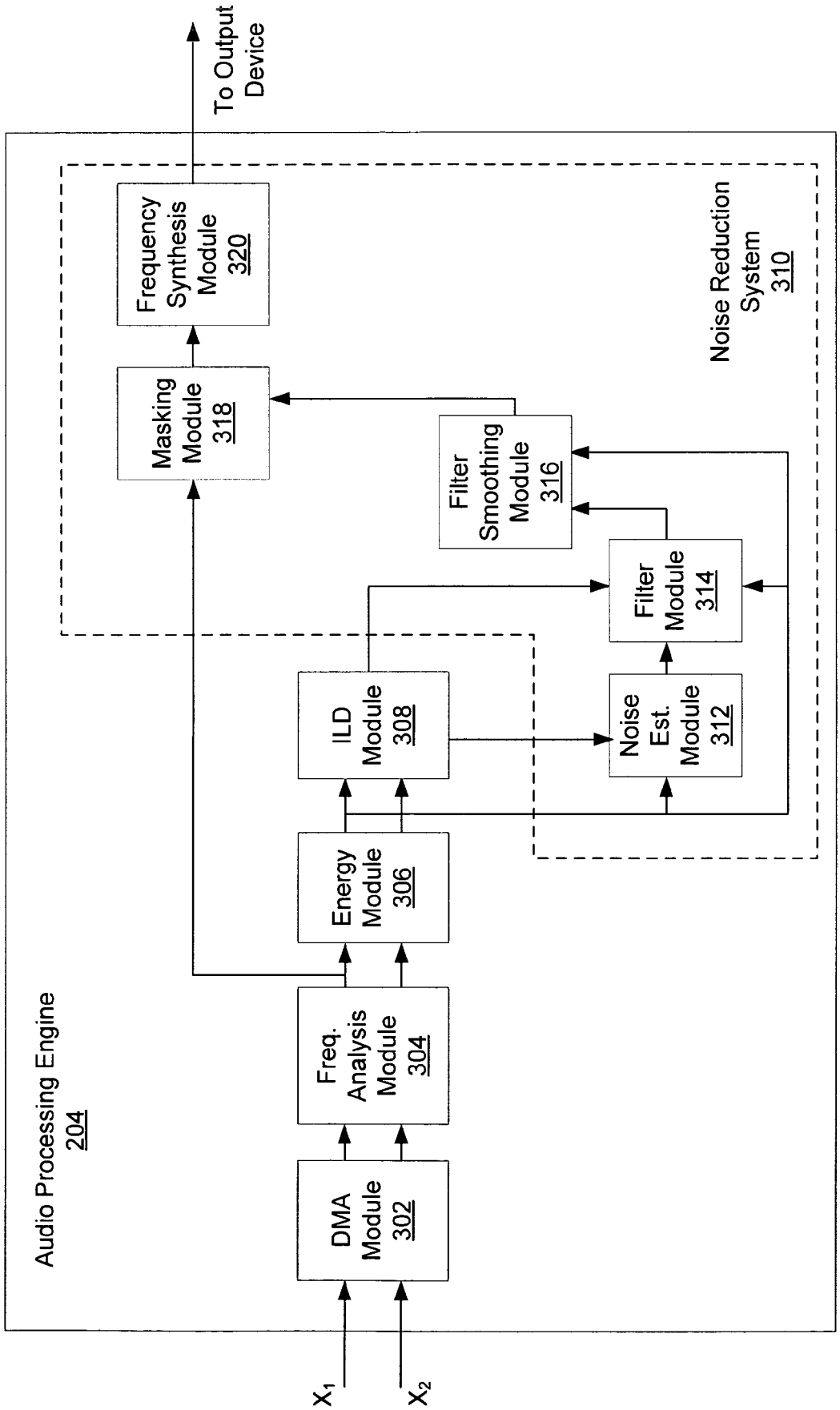
Audio Processing Engine
204
DMA Module 302
Freq. Analysis Module 304
Energy Module 306
ILD Module 308
Noise Est. Module 312
Filter Module 314
Filter Smoothing Module 316
Masking Module 318
Frequency Synthesis Module 320
Noise Reduction System 310
To Output Device
X_1
X_2

FIG. 3

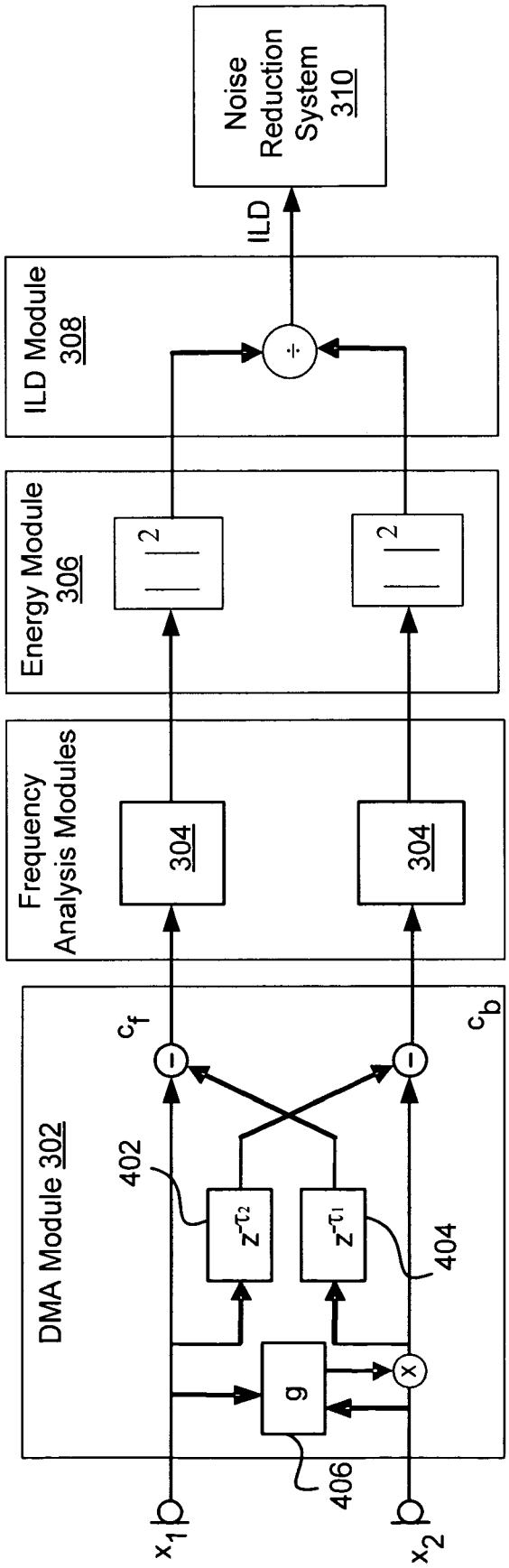
DMA Module 302
402
404
406
g
$z^{-\tau_2}$
$z^{-\tau_1}$
c_f
c_b
x_1
x_2
Frequency Analysis Modules
304
304
Energy Module 306
ILD Module 308
ILD
Noise Reduction System 310

FIG. 4a

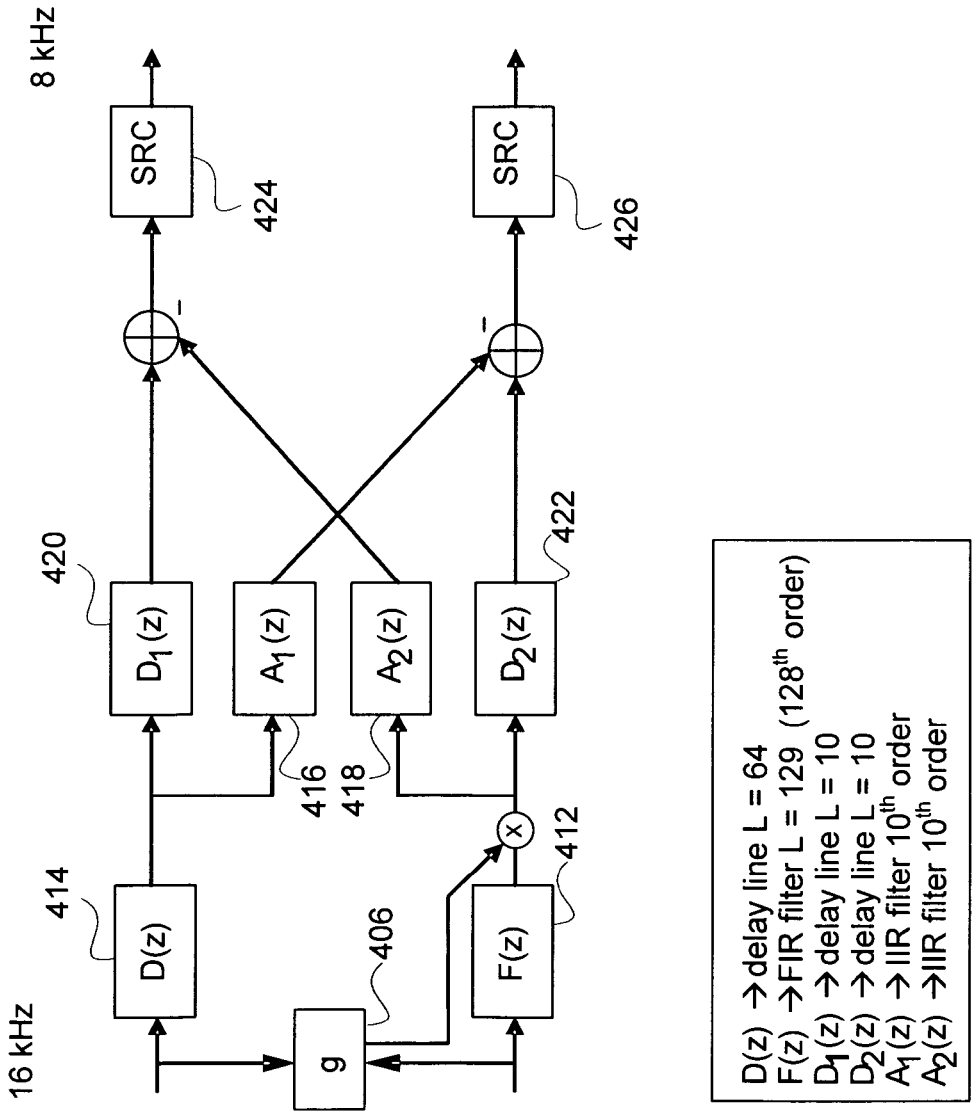
16 kHz
8 kHz
D(z)
414
g
406
D1(z)
420
A1(z)
416
A2(z)
418
F(z)
412
D2(z)
422
SRC
424
SRC
426
D(z) → delay line L = 64
F(z) → FIR filter L = 129 (128th order)
D1(z) → delay line L = 10
D2(z) → delay line L = 10
A1(z) → IIR filter 10th order
A2(z) → IIR filter 10th order

FIG. 4b

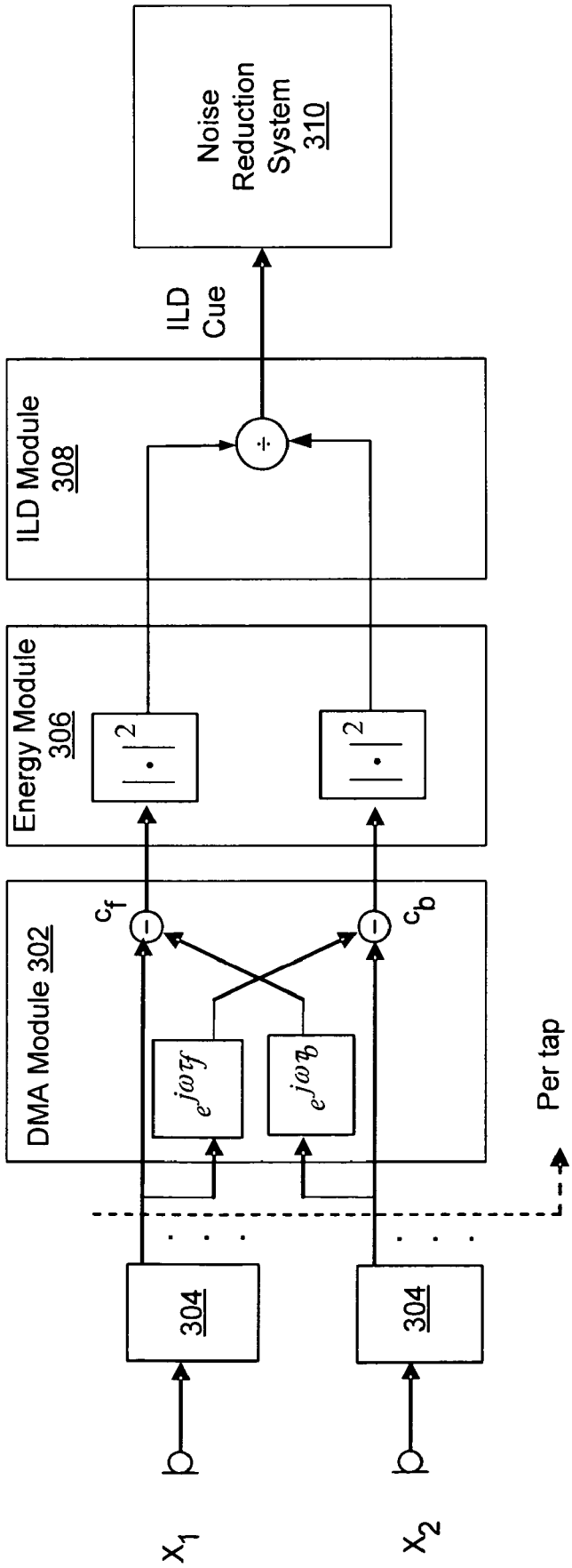
Noise Reduction System 310
ILD Cue
ILD Module 308
÷
Energy Module 306
$|\cdot|^2$
$|\cdot|^2$
DMA Module 302
c_f
c_b
$e^{j\omega\tau_f}$
$e^{j\omega\tau_b}$
Per tap
304
304
x_1
x_2

FIG. 5

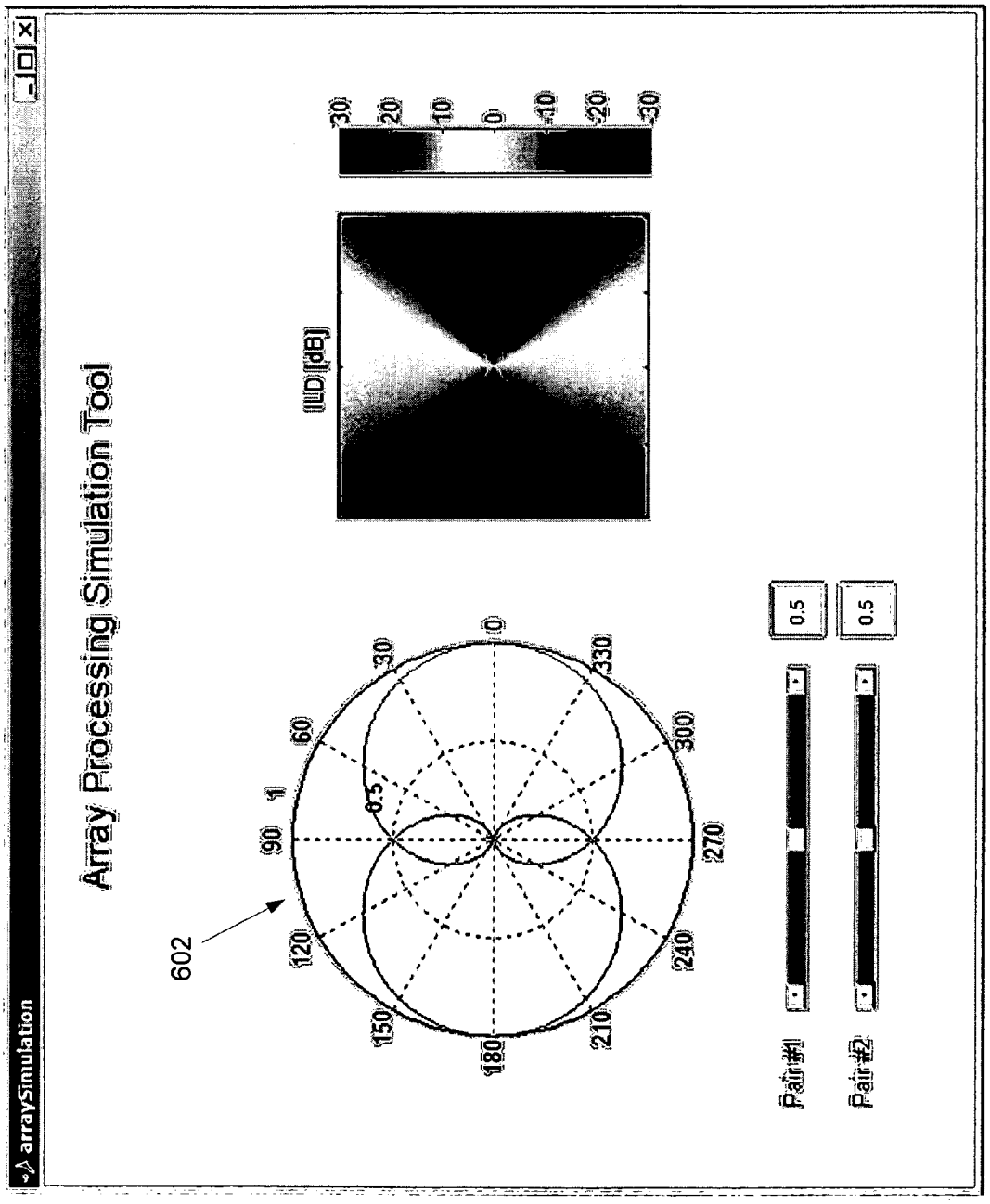
arraySimulation
Array Processing Simulation Tool
602
0
30
60
90
120
150
180
210
240
270
300
330
1
0.5
[LD] [dB]
30
20
10
0
-10
-20
-30
Pair #1
Pair #2
0.5
0.5

FIG. 6

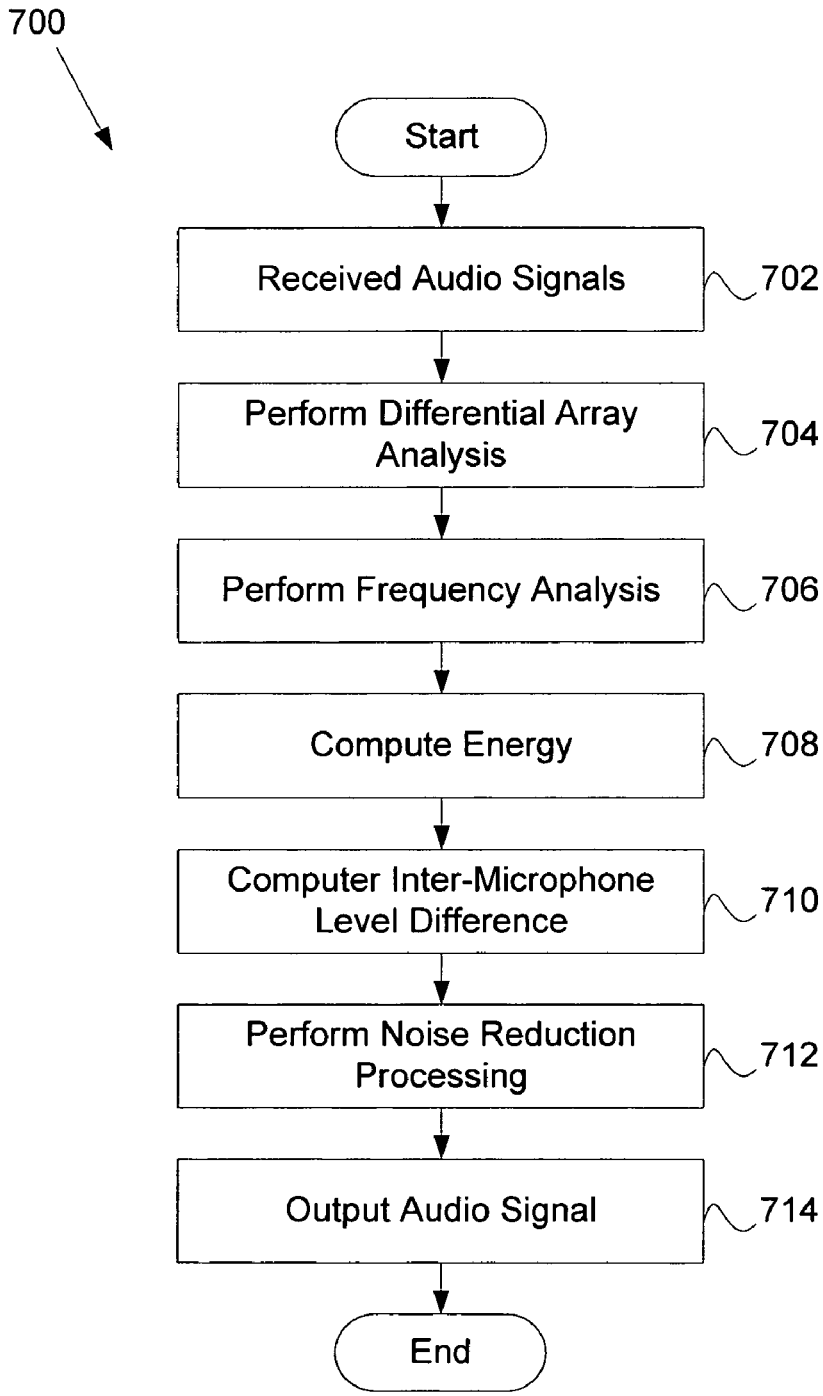
700
Start
Received Audio Signals
702
Perform Differential Array Analysis
704
Perform Frequency Analysis
706
Compute Energy
708
Computer Inter-Microphone Level Difference
710
Perform Noise Reduction Processing
712
Output Audio Signal
714
End

FIG. 7

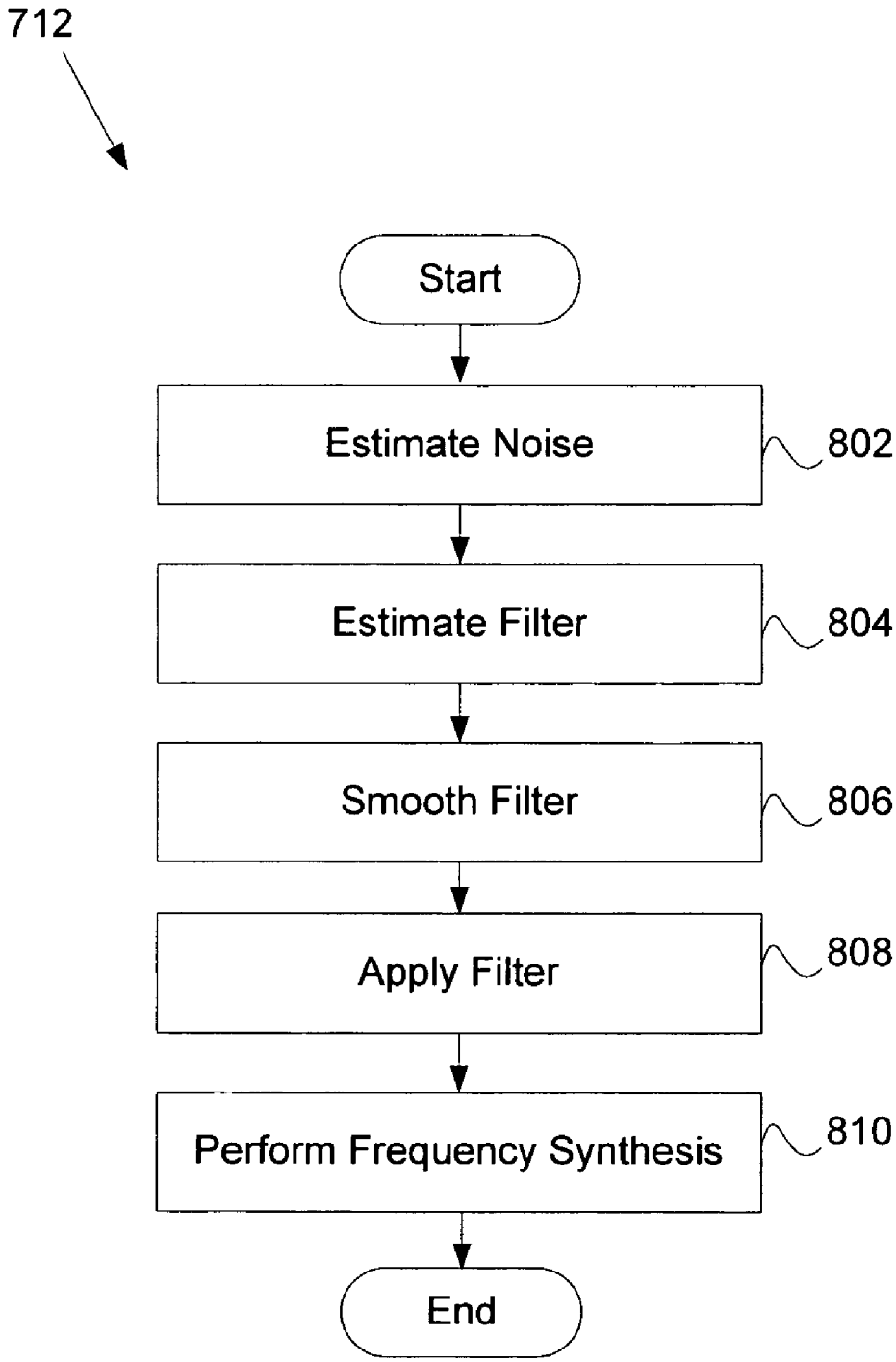
712
Start
Estimate Noise
802
Estimate Filter
804
Smooth Filter
806
Apply Filter
808
Perform Frequency Synthesis
810
End

FIG. 8

SYSTEM AND METHOD FOR UTILIZING OMNI-DIRECTIONAL MICROPHONES FOR SPEECH ENHANCEMENT

CROSS-REFERENCE TO RELATED APPLICATION

The present application claims the priority benefit of U.S. Provisional Patent Application No. 60/850,928, filed Oct. 10, 2006, and entitled "Array Processing Technique for Producing Long-Range ILD Cues with Omni-Directional. Microphone Pair;" the present application is also a continuation-in-part of U.S. patent application Ser. No. 11/343,524, filed Jan. 30, 2006 and entitled "System and Method for Utilizing Inter-Microphone Level Differences for Speech Enhancement," which claims the priority benefit of U.S. Provisional Patent Application No. 60/756,826, filed Jan. 5, 2006, and entitled "Inter-Microphone Level Difference Suppresor," all of which are herein incorporated by reference.

BACKGROUND OF THE INVENTION

1. Field of Invention

The present invention relates generally to audio processing and more. particularly to speech enhancement using inter-microphone level differences.

2. Description of Related Art

Currently, there are many methods for reducing background noise and enhancing speech in an adverse environment. One such method is to use two or more microphones on an audio device. These microphones are in prescribed positions and allow the audio device to determine a level difference between the microphone signals. For example, due to a space difference between the microphones, the difference in times of arrival of the signals from a speech source to the microphones may be utilized to localize the speech source. Once localized, the signals can be spatially filtered to suppress the noise originating from the different directions.

In order to take advantage of the level difference between two omni-directional microphones, a speech source needs to be closer to one of the microphones. That is, in order to obtain a significant level difference, a distance from the source to a first microphone needs to be shorter than a distance from the source to a second microphone. As such, a speech source must remain in relative closeness to the microphones, especially if the microphones are in close proximity as may be required by mobile telephony applications.

A solution to the distance constraint may be obtained by using directional microphones. Using directional microphones allows a user to extend an effective level difference between the two microphones over a larger range with a narrow inter-level difference (ILD) beam. This may be desirable for applications such as push-to-talk (PTT) or videophones where a speech source is not in as close a proximity to the microphones, as for example, a telephone application.

Disadvantageously, directional microphones have numerous physical drawbacks. Typically, directional microphones are large in size and do not fit well in small telephones or cellular phones. Additionally, directional microphones are difficult to mount as they required ports in order for sounds to arrive from a plurality of directions. Slight variations in manufacturing may result in a mismatch, resulting in more expensive manufacturing and production costs.

Therefore, it is desirable to utilize the characteristics of directional microphones in a speech enhancement system, without the disadvantages of using directional microphones, themselves.

SUMMARY OF THE INVENTION

Embodiments of the present invention overcome or substantially alleviate prior problems associated with noise suppression and speech enhancement. In general, systems and methods for utilizing inter-microphone level differences (ILD) to attenuate noise and enhance speech are provided. In exemplary embodiments, the ILD is based on energy level differences of a pair of omni-directional microphones.

Exemplary embodiments of the present invention use a non-linear process to combine components of the acoustic signals from the pair of omni-directional microphones in order to obtain the ILD. In exemplary embodiments, a primary acoustic signal is received by a primary microphone, and a secondary acoustic signal is received by a secondary microphone (e.g., omni-directional microphones). The primary and secondary acoustic signals are converted into primary and secondary electric signals for processing.

A differential microphone array (DMA) module processes the primary and secondary electric signals to determine a cardioid primary signal and a cardioid secondary signal. In exemplary embodiments, the primary and secondary electric signals are delayed by a delay node. The cardioid primary signal is then determined by taking a difference between the primary electric signal and the delayed secondary electric signal, while the cardioid secondary signal is determined by taking a difference between the secondary electric signal and the delayed primary electric signal. In various embodiments the delayed primary electric signal and the delayed secondary electric signal are adjusted by a gain. The gain may be a ratio between a magnitude of the primary acoustic signal and a magnitude of the secondary acoustic signal.

The cardioid signals are filtered through a frequency analysis module which takes the signals and mimics the frequency analysis of the cochlea (i.e., cochlear domain) simulated in this embodiment by a filter bank. Alternatively, other filters such as short-time Fourier transform (STFT), sub-band filter banks, modulated complex lapped transforms, cochlear models, wavelets, etc. can be used for the frequency analysis and synthesis. Energy levels associated with the cardioid primary signal and the cardioid secondary signals are then computed (e.g., as power estimates) and the results are processed by an ILD module using a non-linear combination to obtain the ILD. In exemplary embodiments, the non-linear combination comprises dividing the power estimate associated with the cardioid primary signal by the power estimate associated with the cardioid secondary signal. The ILD may then be used as a spatial discrimination cue in a noise reduction system to suppress unwanted sound sources and enhance the speech.

BRIEF DESCRIPTION OF THE DRAWINGS

FIG. **1***a* and FIG. **1***b* are diagrams of two environments in which embodiments of the present invention may be practiced.

FIG. **2** is a block diagram of an exemplary audio device implementing embodiments of the present invention.

FIG. **3** is a block diagram of an exemplary audio processing engine.

FIG. **4***a* illustrates an exemplary implementation of the DMA module, frequency analysis module, energy module, and the ILD module.

FIG. **4***b* is an exemplary implementation of the DMA module.

FIG. **5** is a block diagram of an alternative embodiment of the present invention.

FIG. **6** is a polar plot of a front-to-back cardioid directivity pattern and ILD diagram produced according to embodiments of the present invention.

FIG. **7** is a flowchart of an exemplary method for utilizing ILD of omni-directional microphones for speech enhancement.

FIG. **8** is a flowchart of an exemplary noise reduction process.

DESCRIPTION OF EXEMPLARY EMBODIMENTS

The present invention provides exemplary systems and methods for utilizing inter-microphone level differences (ILD) of at least two microphones to identify frequency regions dominated by speech in order to enhance speech and attenuate background noise and far-field distracters. Embodiments of the present invention may be practiced on any audio device that is configured to receive sound such as, but not limited to, cellular phones, phone handsets, headsets, and conferencing systems. Advantageously, exemplary embodiments are configured to provide improved noise suppression on small devices and in applications where the main audio source is far from the device. While some embodiments of the present invention will be described in reference to operation on a cellular phone, the present invention may be practiced on any audio device.

Referring to FIG. **1***a* and FIG. **1***b*, environments in which embodiments of the present invention may be practiced are shown. A user provides an audio (speech) source **102** to an audio device **104**. The exemplary audio device **104** comprises two microphones: a primary microphone **106** relative to the audio source **102** and a secondary microphone **108** located a distance, d, away from the primary microphone **106**. In exemplary embodiments, the microphones **106** and **108** are omni-directional microphones.

While the microphones **106** and **108** receive sound (i.e., acoustic signals) from the audio source **102**, the microphones **106** and **108** also pick up noise **110**. Although the noise **110** is shown coming from a single location in FIG. **1***a* and FIG. **1***b*, the noise **110** may comprise any sounds from one or more locations different than the audio source **102**, and may include reverberations and echoes.

Embodiments of the present invention exploit level differences (e.g., energy differences) between the acoustic signals received by the two microphones **106** and **108** independent of how the level differences are obtained. In FIG. **1***a*, because the primary microphone **106** is much closer to the audio source **102** than the secondary microphone **108**, the intensity level is higher for the primary microphone **106** resulting in a larger energy level during a speech/voice segment, for example. In FIG. **1***b*, because directional response of the primary microphone **106** is highest in the direction of the audio source **102** and directional response of the secondary microphone **108** is lower in the direction of the audio source **102**, the level difference is highest in the direction of the audio source **102** and lower elsewhere.

The level difference may then be used to discriminate speech and noise in the time-frequency domain. Further embodiments may use a combination of energy level differences and time delays to discriminate speech. Based on binaural cue decoding, speech signal extraction, or speech enhancement may be performed.

Referring now to FIG. **2**, the exemplary audio device **104** is shown in more detail. In exemplary embodiments, the audio device **104** is an audio receiving device that comprises a processor **202**, the primary microphone **106**, the secondary microphone **108**, an audio processing engine **204**, and an output device **206**. The audio device **104** may comprise further components necessary for audio device **104** operations. The audio processing engine **204** will be discussed in more detail in connection with FIG. **3**.

As previously discussed, the primary and secondary microphones **106** and **108**, respectively, are spaced a distance apart in order to allow for an energy level differences between them. Upon reception by the microphones **106** and **108**, the acoustic signals are converted into electric signals (i.e., a primary electric signal and a secondary electric signal). The electric signals may themselves be converted by an analog-to-digital converter (not shown) into digital signals for processing in accordance with some embodiments. In order to differentiate the acoustic signals, the acoustic signal received by the primary microphone **106** is herein referred to as the primary acoustic signal, while the acoustic signal received by the secondary microphone **108** is herein referred to as the secondary acoustic signal.

The output device **206** is any device which provides an audio output to the user. For example, the output device **206** may be an earpiece of a headset or handset, or a speaker on a conferencing device.

FIG. **3** is a detailed block diagram of the exemplary audio processing engine **204**, according to one embodiment of the present invention. In exemplary embodiments, the audio processing engine **204** is embodied within a memory device. In operation, the acoustic signals (i.e., X_1 and X_2) received from the primary and secondary microphones **106** and **108** are converted to electric signals and processed through a differential microphone array (DMA) module **302**. The DMA module **302** is configured to use DMA theory to create directional patterns for the close-spaced microphones **106** and **108**. The DMA module **302** may determine sounds and signals in a front and back cardioid region about the audio device **104** by delaying and subtracting the acoustic signals captured by the microphones **106** and **108**. Signals (i.e., sounds) received from these cardioid regions are hereinafter referred to as cardioid signals. In one example, sounds from a audio source **102** within the cardioid region are transmitted by the primary microphone **106** as a cardioid primary signal. Sounds from the same audio source **102** are transmitted by the secondary microphone **108** as a cardioid secondary signal.

For a two-microphone system, the DMA module **302** can create two different directional patterns about the audio device **104**. Each directional pattern is a region about the audio device **104** in which sounds generated by an audio source **102** within the region may be received by the microphones **106** and **108** with little attenuation. Sounds generated by audio sources **102** outside of the directional pattern may be attenuated.

In one example, one directional pattern created by the DMA module **302** allows sounds generated from an audio source **102** within a front cardioid region around the audio device **104** to be received, and a second pattern allows sounds from a second audio source **102** within a back cardioid region around the audio device **104** to be received. Sounds from audio sources **102** beyond these regions may also be received but the sounds may be attenuated.

The cardioid signals from the DMA module **302** are then processed by a frequency analysis module **304**. In one embodiment the frequency analysis module **304** takes the cardioid signals and mimics the frequency analysis of the cochlea (i.e., cochlear domain) simulated by a filter bank. In one example, the frequency analysis module **304** separates the cardioid signals into frequency bands. Alternatively, other filters such as short-time Fourier transform (STFT), sub-band filter banks, modulated complex lapped transforms, cochlear models, wavelets, etc. can be used for the frequency analysis and synthesis. Because most sounds (e.g., acoustic signals) are complex and comprise more than one frequency, a sub-band analysis on the acoustic signal determines what individual frequencies are present in the complex acoustic signal

during a frame (e.g., a predetermined period of time). In one embodiment, the frame is 8 ms long.

Once the frequencies are determined, the signals are forwarded to an energy module **306** which computes energy level estimates during an interval of time (i.e., power estimates). The power estimate may be based on bandwidth of the cochlea channel and the cardioid signal. The power estimates are then used by the inter-microphone level difference (ILD) module **308** to determine the ILD.

In various embodiments, the DMA module **302** sends the cardiod signals to the energy module **306**. The energy module **306** computes the power estimates prior to the analysis of the cardiod signals by the frequency analysis module **304**.

Referring to FIG. **4***a*, one implementation of the DMA module **302**, frequency analysis module **304**, energy module **306**, and the ILD module **308** is provided. In this implementation, the acoustic signals received by the microphones **106** and **108** are processed by the DMA module **302**. The exemplary DMA module **302** delays the primary acoustic signal, X_1, via a delay node **404**, $z^{-\tau 1}$. Similarly, the DMA module **302** delays the secondary acoustic signal, X_2, via a second delay node **404**, $z^{-\tau 2}$.

In exemplary embodiments, a cardioid primary signal (C_f) is mathematically determined in the frequency domain (Z transform) as

$$C_f = X_1 - z^{-\tau 1} g X_2$$

while the cardioid secondary signal (C_b) is mathematically determined as

$$C_b = g X_2 - z^{-\tau 2} X_1.$$

The gain factor, g, is computed by the gain module **406** to equalize the signal levels. Prior art systems can suffer loss of performance when the microphone signals have different levels. The gain module is further discussed herein.

In various embodiments, the cardioid signals can be processed through the frequency analysis module **304**. The filter coefficient may be applied to each microphone signal. As a result, the output of the frequency analysis module **304** may comprise a filtered cardioid primary signal, $\alpha C_f(t,\omega)$ and a filtered cardioid secondary signal, $\beta C_f(t,\omega)$, where t represents the time index (t=0, 1, . . . N) and ω represents the frequency index (ω=0, 1, . . . K).

The energy module **306** takes the signals from the frequency analysis module **304** and calculates the power estimates associated with the cardioid primary signal (C_f) and the cardioid secondary signal (C_b). In exemplary embodiments, the power estimates may be mathematically determined by squaring and integrating an absolute value of the output of the frequency analysis module **304**. Power estimates of the signals from the cardioid primary signal and the cardioid secondary signal are referred to herein as components. For example, the energy level associated with the primary microphone signal may be determined by

$$E_f(t,\omega) = \int_{frame} |C_f(t',\omega)|^2 \, dt',$$

and the energy level associated with the secondary microphone signal may be determined by

$$E_b(t,\omega) = \int_{frame} |C_b(t',\omega)|^2 \, dt'.$$

Given the calculated energy levels, the ILD may be determined by the ILD module **308**. In exemplary embodiments, the ILD is determined in a non-linear manner by taking a ratio of the energy levels, such as

$$ILD(t,\omega) = E_f(t,\omega)/E_b(t,\omega)$$

Applying the determined energy levels to this ILD equation results in

$$ILD(t,\omega) = \frac{\int |C_f(t',\omega)|^2 \, dt'}{\int_{frame} |C_b(t',\omega)|^2 \, dt'}.$$

By nonlinearly combining the energy level (i.e., component) of the cardioid primary signal with the energy level (i.e., component) of the cardioid secondary signal, sounds from audio sources **102** within a front-to-back cardioid region (depicted in FIG. **6**) about the audio device **104** may be effectively received. The spatial extent over which the signal can be retrieved can be specified and controlled by the ILD region selected. In contrast, if the cardioid primary signal and the cardioid secondary signal are combined linearly (e.g., the signals are subtracted,) sounds from audio sources **102** within a hypercardioid region may be effectively received. The hypercardioid region may be larger (broader) than the front-to-back cardioid ILD region selected, thus the non-linear combination via ILD can produce a narrower and more spatially selective beam.

Once the ILD is determined, the signals are processed through a noise reduction system **310**. Referring back to FIG. **3**, in exemplary embodiments, the noise reduction system **310** comprises a noise estimate module **312**, a filter module **314**, a filter smoothing module **316**, a masking module **318**, and a frequency synthesis module **320**.

According to an exemplary embodiment of the present invention, a Wiener filter is used to suppress noise/enhance speech. In order to derive the Wiener filter estimate, however, specific inputs are needed. These inputs comprise a power spectral density of noise and a power spectral density of the primary acoustic signal.

In exemplary embodiments, the noise estimate is based only on the acoustic signal from the primary microphone **106**. The exemplary noise estimate module **312** is a component which can be approximated mathematically by

$$N(t,\omega) = \lambda_1(t,\omega) E_1(t,\omega) + (1-\lambda_1(t,\omega)) \min[N(t-1,\omega), E_1(t,\omega)]$$

according to one embodiment of the present invention. As shown, the noise estimate in this embodiment is based on minimum statistics of a current energy estimate of the primary acoustic signal, $E_1(t,\omega)$ and a noise estimate of a previous time frame, $N(t-1,\omega)$. As a result, the noise estimation is performed efficiently and with low latency.

$\lambda_1(t,\omega)$ in the above equation is derived from the ILD approximated by the ILD module **308**, as

$$\lambda_l(t,\omega) = \begin{cases} \approx 0 & \text{if } ILD(t,\omega) < \text{threshold} \\ \approx 1 & \text{if } ILD(t,\omega) > \text{threshold} \end{cases}$$

That is, when ILD at the primary microphone **106** is smaller than a threshold value (e.g., threshold=0.5) above which

speech is expected to be, λ_1 is small, and thus the noise estimator follows the noise closely. When ILD starts to rise (e.g., because speech is present within the large ILD region), λ_1 increases. As a result, the noise estimate module **312** slows down the noise estimation process and the speech energy does not contribute significantly to the final noise estimate. Therefore, exemplary embodiments of the present invention may use a combination of minimum statistics and voice activity detection to determine the noise estimate.

A filter module **314** then derives a filter estimate based on the noise estimate. In one embodiment, the filter is a Wiener filter. Alternative embodiments may contemplate other filters. Accordingly, the Wiener filter may be approximated, according to one embodiment, as

$$W = \left(\frac{P_s}{P_s + P_n}\right)^{\varphi},$$

where P_s is a power spectral density of speech and P_n is a power spectral density of noise. According to one embodiment, P_n is the noise estimate, $N(t,\omega)$, which is calculated by the noise estimate module **312**. In an exemplary embodiment, $P_s=E_1(t,\omega)-\gamma N(t,\omega)$, where $E_1(t,\omega)$ is the energy estimate associated with the primary acoustic signal (e.g., the cardioid primary signal) calculated by the energy module **306**, and $N(t,\omega)$ is the noise estimate provided by the noise estimate module **312**. Because the noise estimate changes with each frame, the filter-estimate will also change with each frame.

γ is an over-subtraction term which is a function of the ILD. γ compensates bias of minimum statistics of the noise estimate module **312** and forms a perceptual weighting. Because time constants are different, the bias will be different between portions of pure noise and portions of noise and speech. Therefore, in some embodiments, compensation for this bias may be necessary. In exemplary embodiments, γ is determined empirically (e.g., 2-3 dB at a large ILD, and is 6-9 dB at a low ILD).

ϕ in the above exemplary Wiener filter equation is a factor which further limits the noise estimate. ϕ can be any positive value. In one embodiment, nonlinear expansion may be obtained by setting ϕ to 2. According to exemplary embodiments, ϕ is determined empirically and applied when a body of

$$W = \left(\frac{P_s}{P_s + P_n}\right)$$

falls below a prescribed value (e.g., 12 dB down from the maximum possible value of W, which is unity).

Because the Wiener filter estimation may change quickly (e.g., from one frame to the next frame) and noise and speech estimates can vary greatly between each frame, application of the Wiener filter estimate, as is, may result in artifacts (e.g., discontinuities, blips, transients, etc.). Therefore, an optional filter smoothing module **316** is provided to smooth the Wiener filter estimate applied to the acoustic signals as a function of time. In one embodiment, the filter smoothing module **316** may be mathematically approximated as

$$M(t,\omega)=\lambda_s(t,\omega)W(t,\omega)+(1-\lambda_s(t,\omega))M(t-1,\omega),$$

where λ_s is a function of the Wiener filter estimate and the primary microphone energy, E_1.

As shown, the filter smoothing module **316**, at time (t) will smooth the Wiener filter estimate using the values of the smoothed Wiener filter estimate from the previous frame at time (t−1). In order to allow for quick response to the acoustic signal changing quickly, the filter smoothing module **316** performs less smoothing on quick changing signals, and more smoothing on slower changing signals. This is accomplished by varying the value of λ_s according to a weighed first order derivative of E_1 with respect to time. If the first order derivative is large and the energy change is large, then λ_s is set to a large value. If the derivative is small then λ_s is set to a smaller value.

After smoothing by the filter smoothing module **316**, the primary acoustic signal is multiplied by the smoothed Wiener filter estimate to estimate the speech. In the above Wiener filter embodiment, the speech estimate is approximated by $S(t,\omega)=C_f(t,\omega)*M(t,\omega)$, where $C_f(t,\omega)$ is the cardioid primary signal. In exemplary embodiments, the speech estimation occurs in the masking module **318**.

Next, the speech estimate is converted back into time domain from the cochlea domain. The conversion comprises taking the speech estimate, $S(t,\omega)$, and adding together the phase shifted signals of the cochlea channels in a frequency synthesis module **320**. Once conversion is completed, the signal is output to the user.

It should be noted that the system architecture of the audio processing engine **204** of FIG. **3** is exemplary. Alternative embodiments may comprise more components, less components, or equivalent components and still be within the scope of embodiments of the present invention. Various modules of the audio processing engine **204** may be combined into a single module. For example, the functionalities of the frequency analysis module **304** and energy module **306** may be combined into a single module. Furthermore, the functions of the ILD module **308** may be combined with the functions of the energy module **306** alone, or in combination with the frequency analysis module **304**. As a further example, the functionality of the filter module **314** may be combined with the functionality of the filter smoothing module **316**.

Referring now to FIG. **4*b***, a practical implementation of the DMA module **302** according to one embodiment of the present invention is shown. In exemplary embodiments, microphone differences are compensated by using a filter **412**, F(z), that equalizes the microphones **106** and **108**. Since the filter **412** is a non-causal filter, in some embodiments, a delay is applied to the primary microphone signal with a delay node **414**, D(z). The application of the delay node **414** results in an alignment of the two channels.

To implement a fractional delay, allpass filters **416** and **418** (e.g., $A_1(z)$ and $A_2(z)$) are applied to the signals. However, the application of the allpass filters **416** and **418** introduces a delay. As a result, two more delay nodes **420** and **422** (e.g., $D_1(z)$ and $D_2(Z)$) are required.

A secondary acoustic signal magnitude may be modified to match a magnitude of the primary acoustic signal by applying a gain which is computed by the gain module **406**. The gain module **406** computes the magnitude of both signals (e.g., X_1 and X_2) and derives the gain, g, as the ratio between the magnitude of the primary acoustic signal to the magnitude of the secondary acoustic signal. The gain can then be used to calculate the cardioid primary signal and the cardioid secondary signal.

Since the allpass filters **416** and **418** produce a desired fractional delay up to one-half the Nyquist frequency, the processing is applied at twice the system sampling rate.

As a result, sampling rate conversion (SRC) nodes **424** and **426** is provided. The outputs of the SRC nodes **424** and **426** are the cardioid primary and cardioid secondary signals, C_f and C_b.

FIG. **5** is a block diagram of an alternative embodiment of the present invention. In this embodiment, the acoustic signals from the microphones **106** and **108** are processed by a frequency analysis module **304** prior to processing by a DMA module **302**. According to the present embodiment, the frequency analysis module **304** takes the acoustic signals (i.e., X_1 and X_2) and mimics a cochlea implementation using a filter bank, such as a fast Fourier transform. Alternatively, other filters such as short-time Fourier transform (STFT), sub-band filter banks, modulated complex lapped transforms, cochlear models, wavelets, etc. can be used for the frequency analysis and synthesis. The output of the frequency analysis module **304** may comprise a plurality of signals (e.g., one per sub-band or tap.)

The secondary acoustic signal magnitude is modified to match the magnitude of the primary acoustic signal by computing the magnitude of both signals and deriving the gain, g, as the ratio between the magnitude of the primary acoustic signal to the magnitude of the secondary acoustic signal. Subsequently, the signals may be processed through the DMA module **302**. In the present embodiment, phase shifting of the signals (e.g., using $e^{j\omega\tau_f}$) is utilized to achieve a fractional delay of the signals.

The remainder of the process through the energy module **306** and the ILD module **308** is similar to the process described in connection with FIG. **4***a*, but on a per sub-band or tap basis.

FIG. **6** is a polar plot of a front-to-back cardioid directivity pattern **602** and ILD diagram produced according to exemplary embodiments of the present invention. The cardioid directivity pattern **602** illustrates a range in which the acoustic signals may be received. As shown, by using the non-linear combination process and delay nodes (e.g., **420** and **422**), the range of the cardioid directivity pattern **602** may be extended in the forward and backward directions (i.e., along the x-axis). The extension in the forward and backward directions allows significant ILD cues to be obtained from acoustic sources further away from the microphones **106** and **108**. As a result, the omni-directional microphones **106** and **108** can achieve acoustic characteristics that mimic those of directional microphones.

Referring now to FIG. **7**, a flowchart **700** of an exemplary method for utilizing ILD of omni-direction microphones for noise suppression and speech enhancement is shown. In step **702**, acoustic signals are received by the primary microphone **106** and the secondary microphone **108**. In exemplary embodiments, the microphones are omni-directional microphones. In some embodiments, the acoustic signals are converted by the microphones to electronic signals (i.e., the primary electric signal and the secondary electric signal) for processing.

Differential array analysis is then performed in step **704** on the acoustic signals by the DMA module **302**. In exemplary embodiments, the DMA module **302** is configured to determine the cardioid primary signal and the cardioid secondary signal by delaying, subtracting, and applying a gain factor to the acoustic signals captured by the microphones **106** and **108**. Specifically, the DMA module **302** determines the cardioid primary signal by taking a difference between the primary electric signal and a delayed secondary electric signal. Similarly, the DMA module **302** determines the cardioid secondary signal by taking a difference between the secondary electric signal and a delay primary electric signal.

In step **706**, the frequency analysis module **304** performs frequency analysis on the cardioid primary and secondary signals. According to one embodiment, the frequency analysis module **304** utilizes a filter bank to determine individual frequencies present in the complex cardioid primary and secondary signals.

In step **708**, energy estimates for the cardioid primary and secondary signals are computed. In one embodiment, the energy estimates are determined by the energy module **306**. The exemplary energy module **306** utilizes a present cardioid signal and a previously calculated energy estimate to determine the present energy estimate of the present cardioid signal.

Once the energy estimates are calculated, inter-microphone level differences (ILD) are computed in step **710**. In one embodiment, the ILD is calculated based on a non-linear combination of the energy estimates of the cardioid primary and secondary signals. In exemplary embodiments, the ILD is computed by the ILD module **308**.

Once the ILD is determined, the cardioid primary and secondary signals are processed through a noise reduction system in step **712**. Step **712** will be discussed in more detail in connection with FIG. **8**. The result of the noise reduction processing is then output to the user in step **714**. In some embodiments, the electronic signals are converted to analog signals for output. The output may be via a speaker, earpieces, or other similar devices.

Referring now to FIG. **8**, a flowchart of the exemplary noise reduction process (step **712**) is provided. Based on the calculated ILD, noise is estimated in step **802**. According to embodiments of the present invention, the noise estimate is based only on the acoustic signal received at the primary microphone **106**. The noise estimate may be based on the present energy estimate of the acoustic signal from the primary microphone **106** and a previously computed noise estimate. In determining the noise estimate, the noise estimation is frozen or slowed down when the ILD increases, according to exemplary embodiments of the present invention.

In step **804**, a filter estimate is computed by the filter module **314**. In one embodiment, the filter used in the audio processing engine **208** is a Wiener filter. Once the filter estimate is determined, the filter estimate may be smoothed in step **806**. Smoothing prevents fast fluctuations which may. create audio artifacts. The smoothed filter estimate is applied to the acoustic signal from the primary microphone **106** in step **808** to generate a speech estimate.

In step **810**, the speech estimate is converted back to the time domain. Exemplary conversion techniques apply an inverse frequency of the cochlea channel to the speech estimate. Once the speech estimate is converted, the audio signal may now be output to the user.

The above-described modules can be comprised of instructions that are stored on storage media. The instructions can be retrieved and executed by the processor **202**. Some examples of instructions include software, program code, and firmware. Some examples of storage media comprise memory devices and integrated circuits. The instructions are operational when executed by the processor **202** to direct the processor **202** to operate in accordance with embodiments of the present invention. Those skilled in the art are familiar with instructions, processor(s), and storage media.

The present invention is described above with reference to exemplary embodiments. It will be apparent to those skilled in the art that various modifications may be made and other embodiments can be used without departing from the broader scope of the present invention. Therefore, these and other variations upon the exemplary embodiments are intended to be covered by the present invention.

The invention claimed is:

1. A system for enhancing speech, comprising:

a primary and secondary microphone configured to receive a primary acoustic signal and a secondary acoustic signal;

a differential microphone array (DMA) module configured to determine a cardioid primary signal and a cardioid secondary signal based on a primary electric signal converted from the primary acoustic signal and secondary electric signal converted from the secondary acoustic signal, the differential microphone array module being further configured to determine the cardioid primary signal based at least in part on delaying at least one of the primary electric signal and the secondary electric signal; and

an inter-microphone level difference module configured to non-linearly combine components of the cardioid primary signal and the cardioid secondary signal to obtain an inter-microphone level difference.

2. The system of claim 1 wherein the DMA module is configured to determine the cardioid primary signal by taking a difference between a delayed primary electric signal and a delayed and level-equalized secondary electric signal.

3. The system of claim 1 wherein the DMA module is configured to determine the cardioid primary signal by determining a gain and taking a difference between a primary electric signal and a delayed secondary electric signal adjusted by the gain.

4. The system of claim 3 wherein the gain is the ratio between a magnitude of the primary acoustic signal and a magnitude of the secondary acoustic signal.

5. The system of claim 1 wherein the DMA module is configured to determine the cardioid secondary signal by taking a difference between the secondary electric signal and a delayed primary electric signal.

6. The system of claim 1 further comprising a frequency analysis module configured to determine frequencies for the cardioid primary signal and the cardioid secondary signal.

7. The system of claim 1 further comprising an energy module configured to determine energy estimates for a frame of the cardioid primary signal and the cardioid secondary signal.

8. The system of claim 1 further comprising a noise estimate module configured to determine a noise estimate for the primary acoustic signal based on an energy estimate of the cardioid primary signal and the inter-microphone level difference.

9. The system of claim 1 further comprising a filter module configured to determine a filter estimate to be applied to the primary acoustic signal.

10. The system of claim 9 further comprising a filter smoothing module configured to smooth the filter estimate prior to applying the filter estimate to the primary acoustic signal.

11. The system of claim 1 further comprising a masking module configured to determine a speech estimate.

12. The system of claim 11 further comprising a frequency synthesis module configured to convert the speech estimate into a time domain for output.

13. The system of claim 1, wherein the DMA module determines the cardioid primary signal and a cardioid secondary signal of a sub-band of the primary electric signal.

14. The system of claim 1 wherein the DMA module is configured to determine the cardioid secondary signal by taking a difference between a level-equalized secondary electric signal and a delayed primary electric signal.

15. A method for enhancing speech, comprising:

receiving a primary acoustic signal at a primary microphone and a secondary acoustic signal at a secondary microphone;

determining a cardioid primary signal and a cardioid secondary signal based on a primary electric signal converted from the primary acoustic signal and a secondary electric signal converted from the secondary acoustic signal;

determining the cardioid primary signal further based at least in part on delaying at least one of the primary electric signal and the secondary electric signal; and

non-linearly combining components of the cardioid primary signal and cardioid secondary signal to obtain an inter-microphone level difference.

16. The method of claim 15 wherein determining the cardioid primary signal comprises taking a difference between a delayed primary electric signal and a delayed secondary electric signal.

17. The method of claim 15 wherein determining the cardioid primary signal comprises determining a gain and taking a difference between a primary electric signal and a delayed secondary electric signal adjusted by the gain.

18. The method of claim 17 wherein the gain is the ratio between a magnitude of the primary acoustic signal and a magnitude of the secondary acoustic signal.

19. The method of claim 15 wherein determining the cardioid secondary signal comprises taking a difference between the secondary electric signal and a delayed primary electric signal.

20. The method of claim 15 wherein non-linearly combining comprises dividing the component of the cardioid primary signal by the component of the cardioid secondary signal.

21. The method of claim 15 further comprising determining an energy estimate for each of the acoustic signals during a frame.

22. The method of claim 15 further comprising determining a noise estimate based on an energy estimate of the primary acoustic signal and the inter-microphone level difference.

23. The method of claim 22 further comprising determining a filter estimate based on the noise estimate of the primary acoustic signal, the energy estimate of the primary acoustic signal, and the inter-microphone level difference.

24. The method of claim 23 further comprising producing a speech estimate by applying the filter estimate to the primary acoustic signal.

25. The method of claim 23 further comprising smoothing the filter estimate.

26. The method of claim 15 wherein the cardioid primary signal and the cardioid secondary signal are each of a sub-band of the primary electric signal.

27. The method of claim 15 wherein determining the cardioid primary signal comprises taking a difference between a delayed primary electric signal and a level-equalized secondary electric signal.

28. A non-transitory computer readable storage medium having embodied thereon a program, the program being executable by a processor to perform a method for enhancing speech, the method comprising:

receiving a primary acoustic signal at a primary microphone and a secondary acoustic signal at a secondary microphone;

determining a cardioid primary signal and a cardioid secondary signal based on a primary electric signal con-

verted from the primary acoustic signal and a secondary electric signal converted from the secondary acoustic signal;

determining the cardioid primary signal further based at least in part on delaying at least one of the primary electric signal and the secondary electric signal; and

non-linearly combining components of the cardioid primary signal and the cardioid secondary signal to obtain an inter-microphone level difference.

* * * * *