ITU-T Recommendation G.9960
Draft generation home Networking transceivers

Table of contents

Summary 4
Keywords 4
Introduction 4
1 Scope 4
2 References 4
3 Definitions 5
4 Abbreviations 9
5 HN architecture and reference models 10
5.1 HN architecture and topology 10
5.1.1 HN Domains 11
5.1.1.1 General rules of operation 11
5.1.1.2 Modes of operation 12
5.1.1.3 Relationship between domain and medium 14
5.1.2 Domain master functionality and node parameters 16
5.1.3 Global master function 17
5.1.4 Quality of service (QoS) 18
5.1.5 Security 19
5.1.6 Inter-domain bridging 20
5.1.6.1 End-to-end QoS for multi-domain connections 22
5.1.6.2 Security in multi-domain connections 22
5.1.7 Low power modes 22
5.2 Reference models 23
5.2.1 Protocol reference model of HN transceiver 23
5.2.2 Interfaces - functional description 25
5.2.2.1 A-interface 25
5.2.2.1.1 AIF_DATA.REQ 25
5.2.2.1.2 AIF_DATA.CNF 26
5.2.2.1.3 AIF_DATA.IND 26
5.2.2.1.4 AIF_CTRL.REQ 26
5.2.2.1.5 AIF_CTRL.CNF 27
5.2.2.1.6 AIF_CTRL.IND 27
5.2.2.2 Medium-Independent Interface (MII) 27
5.2.2.3 Medium-dependent interface (MDI) 28
5.2.3 Functional model of an HN transceiver 28
6 Profiles 29
7 Physical layer specification 30
7.1 Media independent specification 30
7.1.1 Functional model of the PHY 30
7.1.2 Physical coding sub-layer (PCS) 31
7.1.2.1 PHY frame 31
7.1.2.2 MPDU mapping 32

INTEL-1018
10,291,449

49 7.1.2.3 PHY-frame header 32
50 7.1.2.3.1 Common part fields 33
51 7.1.2.3.1.4 Destination ID (DID) 34
52 7.1.2.3.1.5 Multicast Indication (MI) 34
53 7.1.2.3.1.7 Duration 34
54 7.1.2.3.2 Variable part specific fields 35
55 7.1.3 Physical medium attachment (PMA) sub-layer 42
56 7.1.3.1 Scrambling 43
57 7.1.3.2 FEC encoding 43
58 7.1.3.2.1 Encoder 45
59 7.1.3.2.2 FEC encoding parameters 47
60 7.1.3.3 Payload encoding 47
61 7.1.3.3.1 Payload repetition encoding 48
62 7.1.3.4 Header encoder 51
63 7.1.3.5 Segmentation into symbol frames 51
64 7.1.3.5.1 Payload segmentation 52
65 7.1.3.5.2 Header segmentation 52
66 7.1.3.6 Probe frame 52
67 7.1.4 Physical medium dependent (PMD) sub-layer 52
68 7.1.4.1 Sub-carrier spacing and logical indexing 53
69 7.1.4.2 Tone Mapper 54
70 7.1.4.2.1 Summary of sub-carrier types 54
71 7.1.4.2.5 Special mappings 57
72 7.1.4.2.6 Modulation of unloaded sub-carriers 57
73 7.1.4.3 Constellation Encoder 58
74 7.1.4.3.1 Constellation mapping 58
75 7.1.4.3.2 Constellation point scaling 62
76 7.1.4.3.3 Constellation Scrambler 63
77 7.1.4.4 OFDM modulator 64
78 7.1.4.4.1 IDFT 65
79 7.1.4.4.2 Cyclic extension and OFDM symbol 65
80 7.1.4.4.3 Symbol Timing 66
81 7.1.4.4.4 Windowing, overlap and add 67
82 7.1.4.4.5 Frequency up-shift 68
83 7.1.4.4.6 Output signal 68
84 7.1.4.5 Preamble 69
85 7.1.4.5.1 General preamble structure 69
86 7.1.4.5.2 Preamble generation 70
87 7.1.4.6 PMD control parameters 72
88 7.1.4.7 Symbol boost 73
89 7.1.5 Transmit PSD Mask 74
90 7.1.5.1 Sub-carrier masking (notching) 74
91 7.1.5.2 PSD ceiling 74
92 7.1.5.3 PSD shaping 74
93 7.1.5.4 Notching of International Amateur radio bands 75
94 7.2 Media dependent specification 75
95 7.2.1 Physical layer specification over phone lines 75
96 7.2.1.1 Control parameters 75
97 7.2.1.2 Preamble 76
98 7.2.1.2.1 Default preamble structure 76

99 7.2.1.3 PSD mask specifications 77
100 7.2.2 Physical layer specification over power lines 79
101 7.2.2.1 Control parameters 79
102 7.2.2.2 Preamble 80
103 7.2.2.2.1 Default preamble structure 80
104 7.2.2.3 PSD mask specifications 81
105 7.2.3 Physical layer specification over coax 83
106 7.2.3.1 Control parameters 83
107 7.2.3.2 Preamble 84
108 7.2.3.2.1 Default preamble structure 84
109 7.2.3.3 PSD mask specifications 85
110 7.2.3.4 Coexistence on coax 89
111 7.2.4 Transmitter EVM Requirements 89
112 Annex A – Regional requirements for North America 90
113 Annex C – Regional requirements for Japan 91
114 C.1 Scope 91
115 C.2 Media dependent specification 91
116 C.2.1 Physical layer specification over phonelines 91
117 C.2.2 Physical layer specification over powerlines 91
118 C.2.2.1 Frequency use for powerlines 91
119 C.2.3 Physical layer specification over coax 91
120 C.2.3.1 Bandplan 91
121 C.2.3.2 Transmitter EVM Requirements for RF coax 92
122 Annex D – International Amateur radio bands 93
123 Appendix I: Consideration of Domains Comprising Multiple Wire Classes 94
124 Appendix II: Examples of HN topologies 96
125 Appendix III: Spectral usage 101
126 III.1 Scope 101
127 III.2 Spectral usage in Japan 101
128 III.2.1 Frequency allocation for coax 101
129 III.2.1.1 Terrestrial broadcast signal mapped to coax cable 101
130 III.2.1.2 Broadcast Satellite (BS) and Communication Satellite (CS) signal
131 mapped to coax cable 102
132 III.2.1.3 CATV services on coax cable 103
133 III.2.2 Frequency allocation for phone line 104
134 III.2.3 Frequency allocation for power line 104
135 III.2.4 Bibliography 104
136 Appendix IV - Priority Mapping 106
137

ITU-T Draft Recommendation G.9960

Next generation wireline based home networking transceivers – Foundation

Summary

This Foundation Recommendation specifies basic characteristics of next generation home networking transceivers capable of operating over premises wiring including inside telephone wiring, coaxial cable, and power line wiring, and combinations of these, at data rates up to 1 gigabit/second. The specification includes a description of the home network architecture and reference models along with major aspects of the transceiver physical layer specification. A future version of this Recommendation will include the data link layer and regional Annexes to complete the transceiver specification.

Keywords

<Optional>

Introduction

This Foundation Recommendation specifies basic characteristics of home networking transceivers capable of operating over premises wiring including inside telephone wiring, coaxial cable, and power line wiring, and combinations of these. The transceivers defined by this specification provide the data rate and quality of service necessary for triple-play residential services as well as business-type services delivered over xDSL, PON, or other access technology. The transceivers use OFDM type of modulation and are designed to provide EMC and spectral compatibility of home networking transmission with VDSL2 and other types of DSL used to access the home.

1 Scope

This Foundation Recommendation specifies basic characteristics of home networking transceivers designed for the transmission of data over in-premises networks operating over phoneline, powerline or coax.

Specifically, this Recommendation defines:

- the home network architecture and reference models;
- major aspects of the physical layer specification (PCS, PMA and PMD), including PSD limit masks;

These devices are intended to be compatible with other devices sharing the in-premises wiring.

Additionally, the Recommendation provides for spectrum notching for compatibility with Amateur radio services.

A future version of this Recommendation will specify the data link layer, including APC, LLC and MAC.

2 References

The following ITU-T Recommendations and other references contain provisions, which, through reference in this text, constitute provisions of this Recommendation. At the time of publication, the editions indicated were valid. All Recommendations and other references are subject to revision; users of this Recommendation are therefore encouraged to investigate the possibility of applying the

most recent edition of the Recommendations and other references listed below. A list of the currently valid ITU-T Recommendations is regularly published.

The reference to a document within this Recommendation does not give it, as a stand-alone document, the status of a Recommendation.

[1] ITU-T Recommendation X.1035 (2007), *Password-authenticated key exchange (PAK) protocol*

3 Definitions

This Recommendation defines the following terms:

Alien domain: any group of non-HN nodes connected to the same medium or operating in a close proximity. Alien domains can interfere with HN domains. The bridging function to an alien domain, as well as coordination with an alien domain to avoid mutual interference is beyond the scope of G.9960.

> NOTE – HN nodes see interference from an alien domain as a generic external noise and deals with it accordingly. An example of an alien domain could be the in-home part of the access network or any non-HN home network operating over the same wires or other type of media.

Bridge to alien domain/network: an application device implementing an L2 or L3 bridging function to interconnect an HN node to a node of an alien domain (or alien network). Bridging to alien domains/networks is beyond the scope of G.9960.

Broadcast: a type of communication where a node sends the same packet simultaneously to all other nodes in the network or in the domain (domain broadcast).

Centralized (CTR): a type of communication within a domain in which an HN node can communicate with other HN nodes through a relay node. The relay node receives a signal from the HN node and further forwards it to the addressee nodes.

Channel: a transmission path between G.9960 nodes. One channel is considered to be one transmission path. Logically a channel is an instance of communications medium used for the purpose of passing data between two or more nodes.

Client: an application entity distinguished in the network by its unique address (e.g., MAC address).

Client association Table (CAT): a table that associates a Client address with a G.9960 node through which this client can be reached from within the domain.

Coding overhead: a part of the overhead used to carry the coding redundancy (such as redundancy bits of error correction coding or CRC).

Crosstalk: disturbance (including packet collision) introduced by or due to operation of alien networks or other (independent) G.9960 networks.

Data: bits or bytes transported over the medium or via a reference point that individually convey information. Data includes both user (application) data and any other auxiliary information (overhead, including control, management, etc.). Data does not include bits or bytes that, by themselves, do not convey any information, such as frame alignment bits or preamble.

Data packet (packet): an ordered group of bits or bytes with start and stop delimiters.

Data rate: the average number of data elements (bits, bytes, packets or frames) communicated (transmitted) in a unit of time. Depending on the data element, data bit rate, data byte rate, data packet rate, and symbol frame rate may be used. The usual unit of time for data rate is 1 second.

Device ID: a unique identifier allocated to a G.9960 node operating in the network by the domain master after registration.

Domain: a part of a home network comprising all those G.9960 nodes that can communicate, interfere, or both with each other directly at the physical layer. There is no interference between different domains of the same home network (except crosstalk between closely routed wires).

Domain access point: The unique relay node in centralized mode (CM) through which all nodes communicate.

Domain ID: a unique identifier of a G.9960 domain.

Domain master (DM): node of a domain managing (coordinating) all other nodes of the same domain (i.e., assign bandwidth resources and manage priorities). Only one active domain master is allowed in a domain, and all nodes within a domain are managed (coordinated) by a single domain master. If a domain master fails, another node of the same domain, capable of operating as a domain master, should pick up the function of the domain master.

Flow: a uni-directional stream of data between two G.9960 nodes related to a specific application and/or characterized by a specific set of performance and traffic parameters (e.g. QoS parameters, latency, jitter, PLR).

Flow ID: a unique identifier allocated to a flow within a domain.

Global master (GM): a function that provides coordination between different HN domains (such as communication resources, priority setting, policies of domain masters, and crosstalk mitigation). A GM may also convey management functions initiated by the remote management system (e.g. TR-69) to support broadband access. The GM is an optional function.

Guard interval: the time interval intended to mitigate corruption of data carried by the symbol due to ISI from the preceding symbols. In OFDM, the guard interval is implemented as a cyclic extension (cyclic prefix and/or cyclic suffix).

Hidden node: a node that can't communicate directly with some other nodes within a domain.

> NOTE – A hidden node may be able to communicate with another node or with a domain master using a relay node. A node that is hidden from a domain master uses a relay node as a proxy to communicate with the domain master.

Inter-domain bridge: a bridging function above the physical layer to interconnect HN nodes of two different HN domains.

Jitter: a measure of the latency variation above and below of the mean latency value. The maximum jitter is defined as the maximum latency variation above and below the mean latency value.

Latency: a measure of the delay from the instant when the last bit of a packet has been transmitted through the assigned reference point of the transmitter protocol stack to the instant when a whole packet reaches the assigned reference point of receiver protocol stack. Mean and maximum latency estimations are assumed to be calculated on the 99th percentile of all latency measurements. If retransmission is set for a specific flow, retransmission time is a part of latency for the protocol reference points above MAC.

Line data rate: the data rate at the MDI reference point of the transceiver reference model. This is the net data rate plus the overhead rate.

Logical (functional) interface: an interface in which the semantic, syntactic, and symbolic attributes of information flows are defined. Logical interfaces do not define the physical properties of signals used to represent the information. It is defined by a set of primitives.

Management overhead: a part of the overhead used for management purposes (such as network discovery, channel estimation, acknowledge, establishing and tearing the flow).

Medium: a wire-line facility, of a single wire class, allowing physical connection between network nodes (see Appendix I for medium composed of multiple wire classes). Nodes connected to the same medium may communicate on the physical layer, and may interfere with each other unless they use orthogonal signals (e.g., different frequency bands).

Multicast: a type of communication when a node sends the same packet simultaneously to one or more other nodes in the network (the addresses could be both inside and outside the domain).

Net data rate: the data rate available at the A-interface of the transceiver reference model.

Node (network node): any home network device that contains a transceiver. An HN node is any network device that contains a G.9960 transceiver.

Operation modes of a domain:

- **peer-to-peer mode (PM):** a mode of domain operation in which all HN nodes use only PP type of communication with other nodes (without relay nodes). In peer-to-peer mode, no relay nodes are allowed.

- **centralized mode (CM):** a mode of domain operation in which all HN nodes use **CTR** type of communication with a single relay node. In centralized mode, only one relay node is allowed and it is known as the domain access point (DAP).

NOTE – A DAP is likely to serve also as a Domain Master

- **unified mode (UM):** a mode of domain operation in which all nodes within a domain communicate using PP or CTR type of communication, as necessary, while some of the relay nodes may have additional functionalities. Unified mode can be used to support hidden nodes. In unified mode, more than one relay node is allowed.

NOTE – In UM, there is no domain access point defined.

Overhead rate: a part of the line data rate used to support network operation. It includes transmission overhead, management overhead, and coding overhead.

Packet error ratio (PER): a ratio of the number of errored packets received to the total number of received packets. The PER can be used for the total stream of packets (aggregated PER) and for any of its tributary packet flows (PER per flow).

Packet loss ratio (PLR): a ratio of the number of lost packets to the total number of received packets. The PLR can be used for the total stream of packets (aggregated PLR) and for any of its tributary packet flows (PLR per flow).

Passband: the portion of the frequency spectrum that is allowed to be used for transmission. The passband may consist of multiple, disjoint portions of the frequency spectrum.

Peer-to-peer (PP): a type of communication within a domain in which direct signal traffic is established between HN nodes with no relay nodes.

Physical interface: an interface defined in terms of physical properties of the signals used to represent the information transfer. A physical interface is defined by signal parameters like power (power spectrum density), timing, and connector type.

Primitives: basic measures of quantities obtained locally or reported by other nodes of the domain. Performance primitives are basic measurements of performance-related quantities, categorized as events, anomalies and defects. Primitives may also be basic measures of other quantities (e.g., ac or battery power).

Priority: a value assigned to the specific packet(s) that determines the relative importance of transmitting packet(s) during the upcoming opportunity to use the medium.

Quality of service (QoS): a set of quality requirements on the communications in the network. Support of QoS refers to mechanisms that can provide different priority to different flows, or can guarantee a measurable level of performance to a flow based on a set of QoS parameters.

Reference point: a location in a signal flow, either logical or physical, that provides a common point for observation and or measurement of the signal flow.

Registration: the process used by a G.9960 node to join the domain.

Relay node: an HN node acting as an intermediary node, through which other nodes of the same domain can pass their signal traffic (data, control, or management) in either direction of transmission.

Residential Gateway: a device providing, among other functions, bridging between the access network and the home network. Residential gateways are out of scope of G.9960.

Stopband: the portion of the frequency spectrum that is not allowed for transmission.

Sub-carrier (OFDM sub-carrier): the center frequency of each OFDM sub-channel onto which bits may be modulated for transmission over the sub-channel.

Sub-carrier spacing: the difference between frequencies of any two adjacent OFDM sub-carriers.

Sub-channel (OFDM sub-channel): a fundamental element of OFDM modulation technology. The OFDM modulator partitions the channel bandwidth into a set of parallel sub-channels.

Symbol (OFDM symbol): a fixed time-unit of an OFDM signal carrying one or more bits of data. An OFDM symbol consists of multiple sine-wave signals or sub-carriers, each modulated by certain number of data bits and transmitted during the fixed time called symbol period.

Symbol frame: A frame composed of bits of a single OFDM symbol period. Symbol frames are exchanged over the δ-reference point between the PMA and PMD sub-layers of the PHY.

Symbol rate: the rate, in symbols per second, at which OFDM symbols are transmitted by a node onto a medium. Symbol rate is calculated only for time periods of continuous transmission.

Throughput (node): The amount of data transferred from the A-interface of a source node to the A-interface of a destination node over some time interval, expressed as the number of bits per second.

Transmission overhead: a part of the overhead used to support transmission over the line (e.g., samples of cyclic prefix, inter-packet gaps, and silent periods).

Unicast: a type of communication when a node sends the packet to another single node (inside or outside of the domain).

Wire class: one of the classes of wire, having the same general characteristics: coaxial cable, home electrical power wire, phone line wire and Category 5 cable.

4 Abbreviations

This Recommendation uses the following abbreviations:

AE	application entity
AN	access network
APC	application protocol convergence
CM	centralized mode of domain operation
CoS	class of service
CTR	centralized type of communication
DAP	domain access point
DLL	data link layer
DM	domain master
DSL	digital subscriber line
GM	global master
HN	home network comprising exclusively G.9960 network devices
LDPC-BC	low-density parity-check block-codes
LLC	logical link control
MAC	media access control
MAP	media access plan
MDI	medium-dependent interface
MII	media-independent interface
OFDM	orthogonal frequency division multiplexing
PCS	physical coding sub-layer
PM	peer-to-peer mode of domain operation
PMA	physical medium attachment
PMD	physical medium dependent
PON	passive optical network
PP	peer-to-peer type of communication
QC-LDPC-BC	Quasi-cyclic low-density parity-check block-code
QoS	quality of service
RG	residential gateway
UM	unified mode of domain operation

5 HN architecture and reference models

5.1 HN architecture and topology

A generic structure of HN is presented in Figure 5-1. The model includes one or more domains, inter-domain bridges, and bridges to alien domains of a home network (e.g., WiFi, ethernet, USB), and a bridge to the access network (e.g., DSL, PON, cable). The global master is an optional function that provides coordination between different HN domains (such as channel resources, priority setting, domain operational characteristics), and may convey the relevant functions initiated by the remote management system (e.g., Broadband Forum TR-069) to support broadband access. Bridges to alien domains are beyond the scope of G.9960.

NOTE 1 − It is not necessary that all inter-domain bridges presented in Figure 5-1 be used. Depending on the application, domains could be daisy-chained, or star-connected, or could use another connection topology. Multi-route connections between domains are not allowed.

NOTE 2 − Implementations of some nodes, e.g., residential gateway (RG), can include inter-domain bridges allowing connection of the RG to more than one domain (more than one medium).

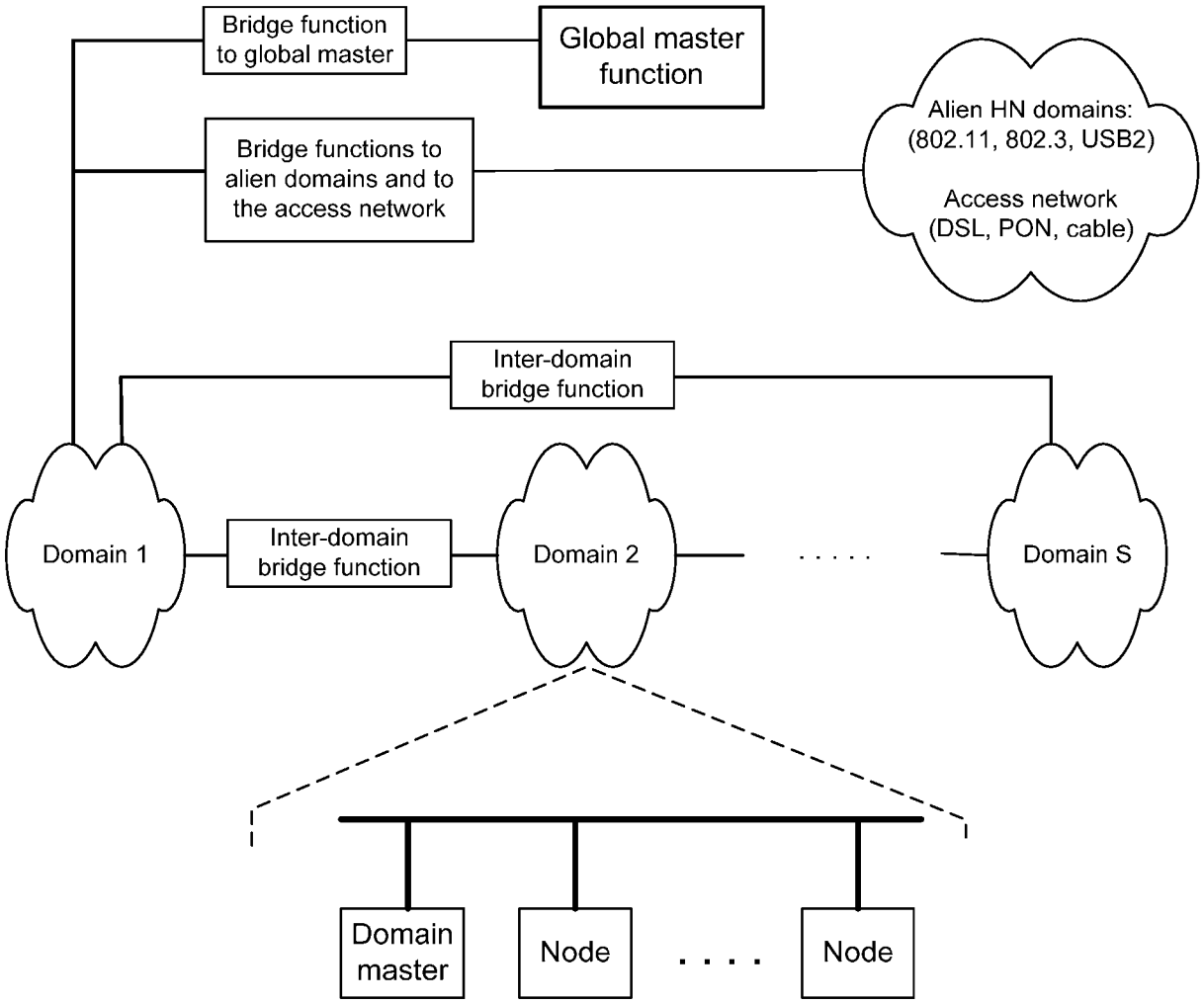

Figure 5-1/G.9960 − G.9960 architecture reference model

A domain contains HN nodes connected to the same medium, where one node is acting as a domain master. Nodes of the same domain communicate via the medium over which the domain is established. Nodes connected to different domains communicate via inter-domain bridges (e.g. L2 or L3 bridging, see §5.1.6).

A domain shall be capable of supporting at least 32 registered nodes and may optionally support up to 250 registered nodes. Each node shall be capable of supporting simultaneous communication sessions with at least 8 other nodes using dedicated transmission profiles (runtime BATs), different from the pre-defined transmission profiles described in §7.1.4.2.2.1.

The scope of G.9960 is limited to transceivers of all HN nodes capable of operating as a regular node or a domain master, or as a domain access point (DAP) or as a relay node of any HN domain. Other parts of HN, including inter-domain bridges, RG (as a bridge to the access network), and bridges to alien domains, are beyond the scope of G.9960; however G.9960 defines all necessary hooks to support their functionality and exchange of relevant information.

The domain master considers bridges to alien domains as regular clients of an HN node with certain bandwidth requirements, while it considers inter-domain bridges as regular clients whose interfaces (see §5.1.6) comply with requirements implied by this Recommendation.

5.1.1 HN Domains

5.1.1.1 General rules of operation

A domain as depicted in Figure 5-1 may include the following types of nodes: regular nodes, relay nodes, a domain master, and a DAP.

The function of the domain master is to assign and coordinate resources (bandwidth and priorities) of all nodes in its domain. The following rules apply for any domain:

1. There shall be one and only one active domain master per domain. In case an active domain master is not assigned, fails, or is switched off, a domain master selection procedure is initiated to assign a new active domain master. This procedure is for further study.
2. Nodes of the same HN network that can communicate and interfere with each other directly at the physical layer (except crosstalk between closely routed wires) shall be assigned to the same domain.
3. All HN nodes within a domain shall be capable of operating in PP type of communication and CTR type of communication (the CTR is considered as a subset of PP, where the first destination address for the node is a relay node). For both PP and CTR types of communication, bandwidth resources and priorities of all nodes within the domain are managed by the domain master.
4. More than one domain may be established over the same medium, for example, by using orthogonal signals over different frequency bands.
5. A G.9960 network may include one or more domains.
6. Domains from independent G.9960 networks established over the same medium may interfere with each other (e.g., if they use the same frequency band). Coordination between G.9960 domains of independent networks sharing a common medium is for further study.
7. G.9960 nodes are not required to be domain master capable. That is, some G.9960 nodes may not support the functionality necessary to become a domain master.
8. All nodes in a domain shall be managed by a single domain master.

9. The HN network shall have a unique network name. All domains of the same HN network shall use this network name.
10. The domain master shall assign a device ID to a node during the node's registration process.
11. All nodes within the same domain shall use the same domain ID.
12. A node shall not pass via its A-interface packets contained in PHY frames sourced by other domains (having a different domain ID value than the one that the node is associated with). A node shall be capable of detecting existence of a neighbouring domain when receiving its PHY frame (having a different domain ID value than the one that the node is associated with).

NOTE – The method of determining a domain ID for assignment is for further study.

5.1.1.2 Modes of operation

A domain can operate in one of 3 modes: peer-to-peer mode (PM), centralized mode (CM), and unified mode (UM). Different domains within the HN can use different modes of operation, i.e. PM, CM, or UM. Examples of domains in different operation modes are presented in Appendix II.

Broadcast and multicast shall be supported in any domain, independently of its operation mode (PM, CM or UM).

In PM, only PP type of communication shall be used in the domain. Thus, direct signal traffic is established between two communicating nodes. Figure 5-2 shows PP communication between nodes A and B. Packets addressed to nodes outside the domain are sent to the node associated with the inter-domain bridge (node C in Figure 5-2).

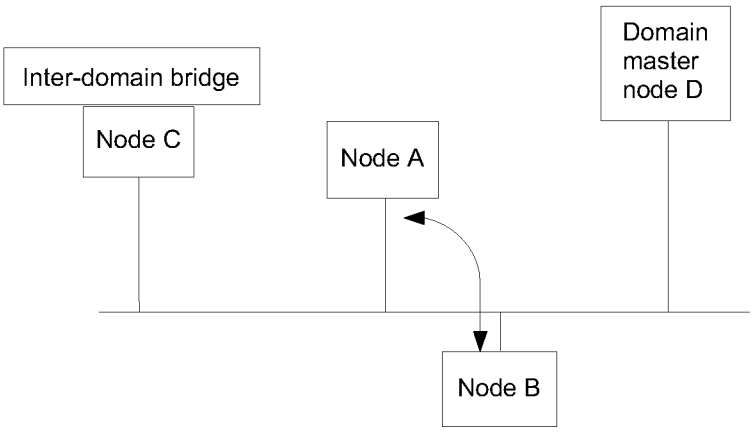

Figure 5-2/G.9960 – Domain operating in peer-to-peer mode (PM)

In CM, only CTR type of communication shall be used. Thus, any node of the domain can communicate with another node only through the DAP. The DAP receives signals from all nodes of the domain and further forwards them to the corresponding addressee nodes. Packets addressed to

nodes outside the domain are forwarded by the DAP to the node associated with the inter-domain bridge (node C in Figure 5-3). Usually, but not necessarily, the DAP also serves as a domain master (Figure 5-3).

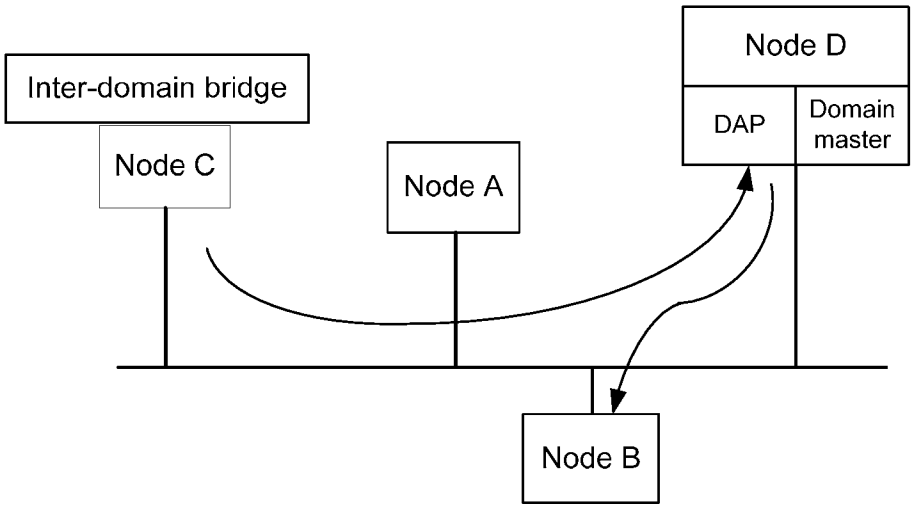

Figure 5-3/G.9960 − Domain operating in centralized mode (CM)

In case of DAP failure, no communication between nodes in the domain is allowed.

In UM, a hidden node in a domain can communicate with another node through a relay node as shown in Figure 5-4. In the example, two nodes within the same domain (Node C and Node H) that are hidden from each other communicate with each other via the relay node (Node A). Both nodes are managed by the domain master (Node D) and can communicate directly with all other nodes. Packets addressed to nodes outside the domain are sent to the node associated with the inter-domain bridge (node C in Figure 5-4).

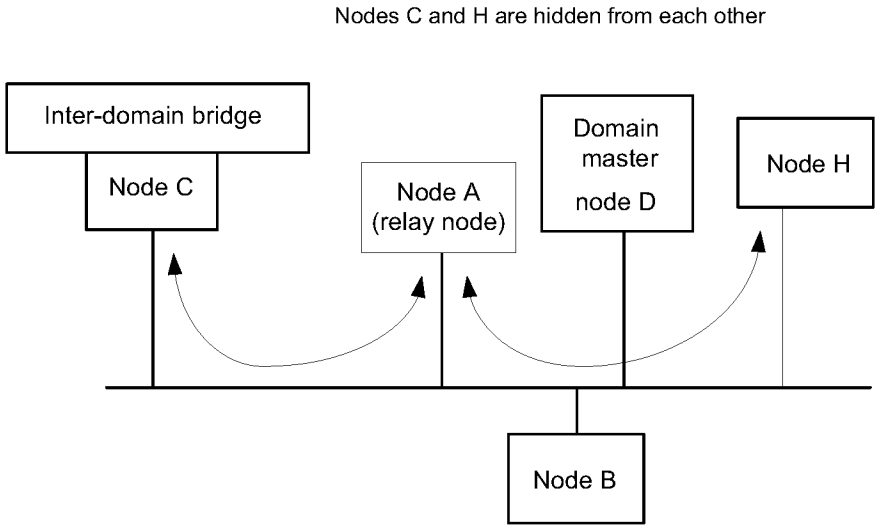

Figure 5-4/G.9960 − A domain operating in Unified mode (UM) containing hidden nodes

5.1.1.3 Relationship between domain and medium

Figure 5-5 shows several examples of the relationships between domain, medium and wire class. Note that in Figure 5-5, each of the domains is shown to be associated with a single medium. This represents the focus of the HN network; domains optimized to operate on a single wire class with multiple domains interconnected via inter-domain bridges. Figure 5-5 (A) shows an example network segment comprising three different media: coax, phone line and power line. A single domain exists on each medium and the domains are separated by inter-domain bridges. Figure 5-5 (B) shows another example network segment comprising phone line and power line mediums. In this case, the phone line medium comprises two segments of phone wire that are joined by splicing or at a connector. These two phone line segments are of a single wire class and therefore are a single medium. As shown in Figure 5-5 (A), there is a single domain on each medium and the domains are separated by inter-domain bridges. Figure 5-5 (C) shows the example network segment from Figure 5-5 (A), but also demonstrates the potential for having multiple domains on a medium. In Figure 5-5 (C), the phone line medium carries three domains and the power line medium carries two domains. The multiple domains on each individual medium must have orthogonal signaling to avoid interference. For example, on the power line, domain C5 must have signaling that is orthogonal to signaling on domain C6. These domains communicate via inter-domain bridges that are not shown in the figure. Refer to Figure II-3 for an alternative representation of multiple domains on a single medium.

It is possible to interconnect wire classes and operate them under a single domain. This special application of HN is described in Appendix I. However, it is expected that such scenarios would occur very infrequently and such practices will be avoided if possible.

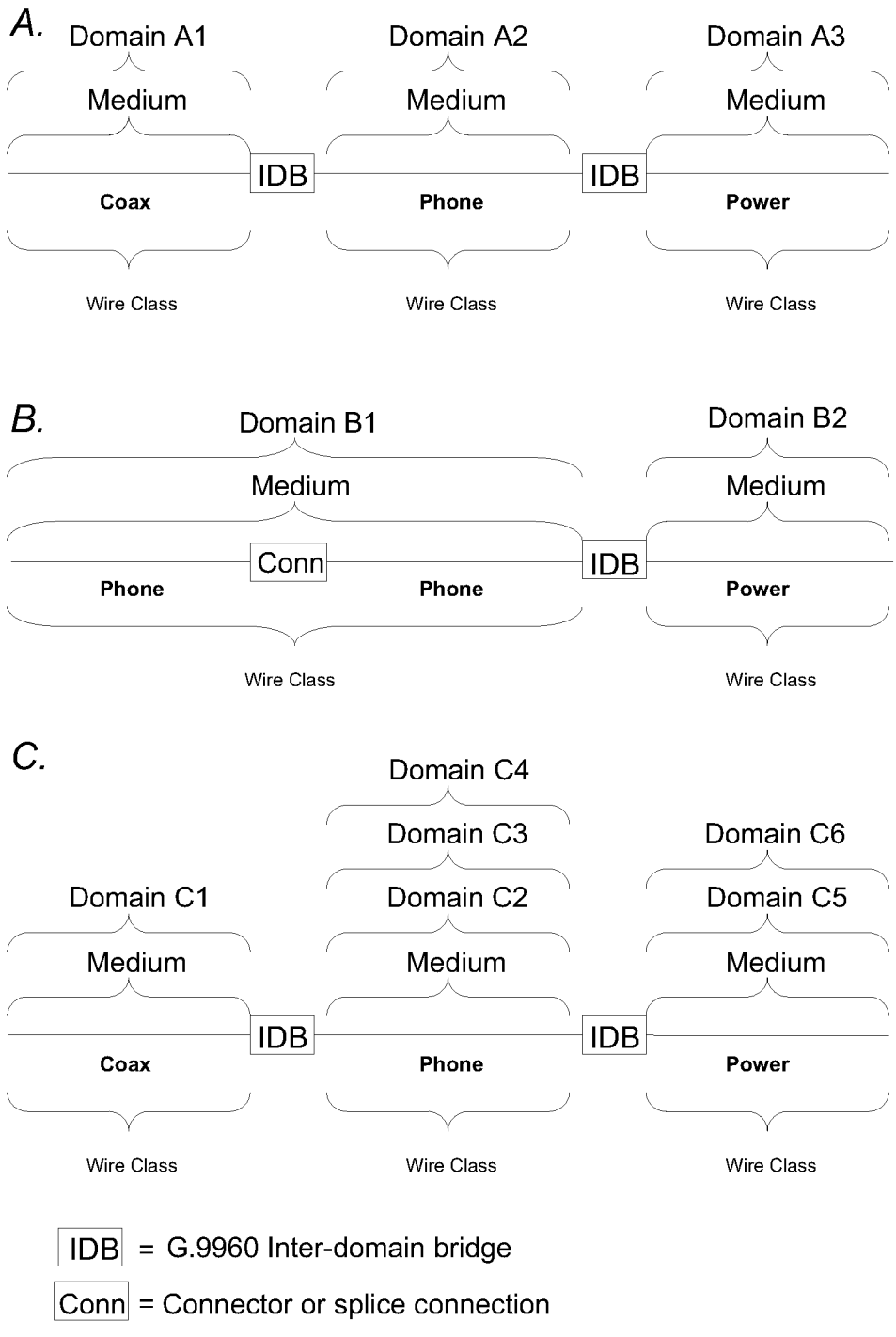

Figure 5-5/G.9960 – Relationships between domain, medium and wire class

5.1.2 Domain master functionality and node parameters

A domain master controls operation of the nodes in the domain. The main functions of a domain master are summarized in Table 5-1.

Table 5-1/G.9960 − Main Functions of the Domain Master

Function	Description	
Indication of presence	Periodically communicates MAP to all nodes in the domain	
Admission control	Admits new nodes to the domain Limits the number of nodes in a domain Facilitates departure of nodes from the domain	
Determination of domain operation	Assigns mode of operation inside the domain (PM, CM, or UM) Supports hidden nodes by assigning MAP repeaters Supports synchronization of the MAC cycle to an external source (e.g., the AC line) Facilitates spectrum compatibility for the domain by assigning relevant limits on: - Frequency band - Maximum transmit power - PSD mask	
Bandwidth allocation and QoS support	Assigns media access rules to all nodes of the domain to facilitates support of QoS	
Security	Assists authentication and encryption keys management	
Monitor status of the domain	Collects statistics of domain operation: - List of nodes in the domain - Topology - Performance statistics (data rate, error count) - Statistics on neighboring domains	
Communication with the global master	Coordinates operation of the domain with other domains using the global master function	
Backup master assignment	Assigning of a backup domain master to take over the domain master role	

The main functions and capabilities of a regular node (end-node) are summarized in Table 5-2.

Table 5-2/G.9960 − Main Functions and capabilities of a regular node

Function	Description and Parameters	
Interpretation of the traffic specification	Receives and interprets the MAP	
Support of admission control protocol	Supports admission control protocol	
Support of operation modes of the domain	Supports the operation mode (PM, CM, or UM) Complies with spectrum compatibility settings for the domain by assigning relevant limits on: - Frequency band - Maximum transmit power - PSD mask	
Support of media access rules	Accesses media using media access rules coordinated with the domain master	
Support of security	Supports authentication and encryption key management procedures	
Collection and reporting of node information	Provides statistics about: - List of visible nodes - List of clients (CAT) - List of capabilities supported by the node - Performance statistics (data rate, error count, time stamps) - Statistics on detected neighboring networks	
Request of bandwidth allocation	- Creates flows - Requests bandwidth allocations from the domain master in order to meet QoS requirements of flows	
Support of retransmissions	Provides acknowledgment and retransmission of data units that were received with error	
Support of extended capabilities	- Domain Master - Domain Access Point (DAP) - Data Relaying - MAP Repeating - Domain master selection procedure	

5.1.3 Global master function

The global master (GM) function, if implemented, interacts with G.9960 domains and coordinates their operation by exchanging relevant information with domain masters via the logical M-interface as shown in Figure 5-6.

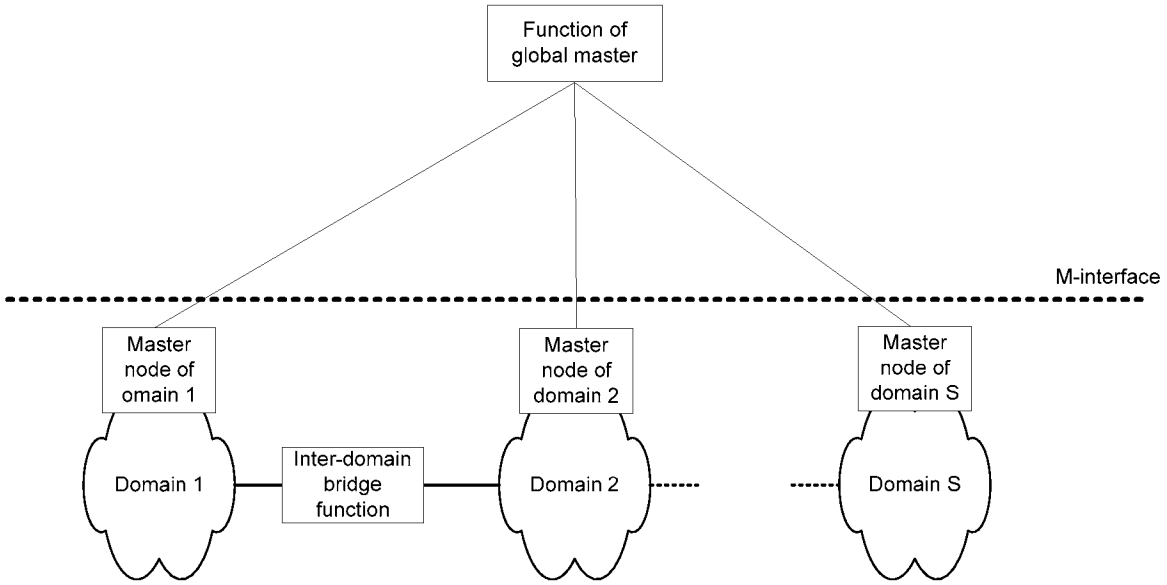

Figure 5-6/G.9960 – Functional model of GM

The following rules apply to the GM:

1. In a multi-domain network, the GM may coordinate some or all domains. For coordination, the GM exchanges information with domain masters of all coordinated domains via the M-interface. The GM may retrieve relevant domain-related data from domain masters and send control signals and data for coordination between domains to domain masters.
2. The M-interface is functional; its physical implementation is vendor discretionary. In case a domain master is replaced (e.g., as a result of a failure), the GM shall interface to the newly selected domain master.
3. The Information exchange protocol between the GM and a domain master is unified for all domains. To identify a specific domain for communication, the GM shall use the domain ID.

NOTE – The GM doesn't limit the number of domains in the network, although the format of the domain ID shall fit the 4-bit field (DOD field in the PHY-frame header – §7.1.2.3), which limits the potential management capability of the GM.

5.1.4 Quality of service (QoS)

Quality of service (QoS) is a measure of the quality of delivery of services in the network, placing requirements on the transmission and queuing of network traffic. G.9960 supports two QoS methods: Priority-based QoS and Parameter-based QoS.

The QoS requirements are supported between nodes inside the same domain and between nodes connected to different domains if services communicated between nodes belong to different domains. In the latter case, inter-domain bridges are expected to not compromise the QoS requirements (such as latency).

For communication inside a domain, the G.9960 QoS mechanism operates per flow. Flows are set up and torn down on a service basis. The type of service communicated by the flow determines the QoS method over the flow and any relevant QoS parameters. Data packets belonging to a specific flow are scheduled to be sent onto the media in accordance with the defined QoS method. The G.9960 QoS method shall handle both constant and variable bit-rate traffic.

Priority-based QoS refers to a mechanism that provides different priorities for media access to different flows. All HN transceivers shall support priority-based QoS. The number of supported priority levels associated with the incoming packets (at A-interface) shall be 8 (denoted from 0 to 7).

With priority-based QoS, the G.9960 transceiver associates each flow with a certain priority queue, based on priority or other priority-related parameters of incoming packets. The G.9960 priority-based QoS method defines the order in which packets from each queue will be sent to the medium and in which order packets will be processed (and possibly dropped), based solely on the priority assigned to the queue. The number of supported priority queues may be less than 8 and depends on the profile. The mapping between the priority of the flow and the associated priority queue shall be as recommended by IEEE 802.1D-2004 for user priority to traffic class mappings, as shown in Appendix IV.

Parameter-based QoS refers to a mechanism that provides specific performance metrics (QoS parameters) for a given flow associated with the application (service), and resource allocation for media access to meet these performance metrics. A set of these parameters may include, but is not limited to, data throughput, latency, jitter, or PER.

With Parameter-based QoS, the G.9960 transceiver associates each flow with a set of QoS parameters related to the particular service and with a certain queue. The G.9960 parameter-based QoS method provides appropriate resources (e.g., bandwidth) necessary to communicate each flow through the medium so that QoS parameters associated with this flow are met. It also determines the order in which packets from each queue will be sent to the medium and in which order packets will be processed (and possibly dropped) based on the knowledge of traffic parameters. The minimum number of supported flows (queues) depends on the profile.

5.1.5 Security

G.9960 security is designed to address operation over shared media, such as power-line and coax cable. Besides regular network admission procedures, which ensure that only permitted G.9960 nodes are allowed to join a G.9960 network via one of its domains, G.9960 defines point-to-point security, allowing authentication of each pair of nodes prior to communication and unique encryption keys for each pair of communicating nodes or per multicast group. This generally improves security by building another layer of protection against an intruder that has broken through the network admission control, and maintains full confidentiality for all communications within the network. The latter suits G.9960 to be installed in public places (hotels, small businesses, home offices), requiring at least the same grade of security and confidentiality as defined in the most recent specification for wireless LAN (IEEE 802.11-2007).

G.9960 security provides the following main features:

- Encryption of all relevant data frames based on AES-128 and NIST recommendations
- Advanced authentication and secure admission of nodes into network domains, based on ITU-T Recommendation X.1035 [1].
- Key management, including generation, secure communication, update, and termination of encryption keys.
- High confidentiality and integrity of all transactions, including point-to-point authentication and unique encryption keys.
- Support of secure operation with the presence of relay (proxy) nodes
- Allows simultaneous operation of distinct, separately secured networks on the same media.

Security procedures that are user-friendly may require the user to set a password for each node prior to installation. The rest of the procedures necessary to establish and maintain security are facilitated automatically by the security controller (SC) function, without involvement of the user.

Nodes that don't include an appropriate user interface may use a unique manufacturer-set password.

For applications in which reduced security is acceptable, the user may rely on a default password provided by the manufacturer. Thus, no action from the user is required on installation, although with a risk to connect the node to neighbouring G.9960 network.

Security and mutual confidentiality between clients associated with the same node is supposed to be resolved at the higher layers of the client protocol stack and is beyond the scope of this Recommendation.

5.1.6 Inter-domain bridging

The inter-domain bridge (IDB) function connects nodes of two G.9960 domains. In Figure 5-7, application entities AE1 (service originator) and AE2 (service destination) are associated with nodes A1 and B2 of two domains. The communication path between nodes A1 and B2 goes through domain 1 and domain 2, and includes in-domain flows F1, F2 and the IDB function. Interfaces between nodes B1, A2 and the IDB are regular client interfaces (A-interfaces, see §5.2.1). Communication paths routed through more than two domains operate in the same way.

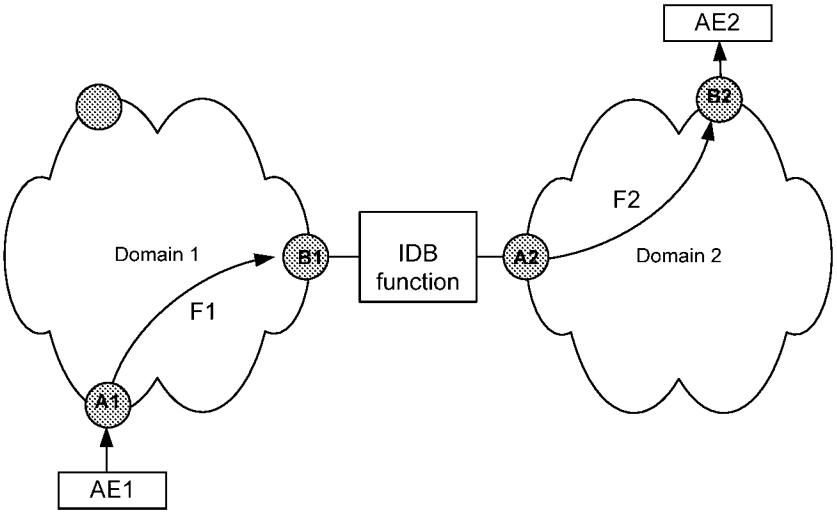

Figure 5-7/G.9960 – Communication path between nodes of two different domains

The protocol reference model for inter-domain communications shown in Figure 5-7 is presented in Figure 5-8.

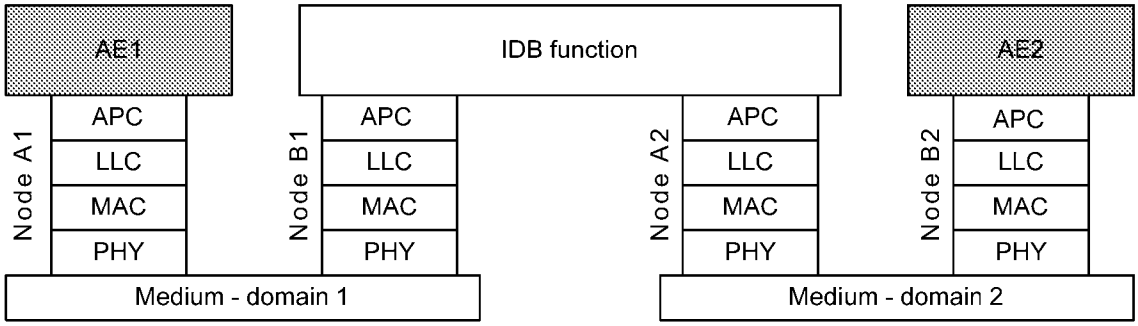

Figure 5-8/G.9960 – Protocol stack of inter-domain communication

In the case that the APC is implemented as an ethernet convergence sub-layer, the IDB function can be implemented as a standard 802.1D transparent bridge.

One case of inter-domain bridging relates to implementation of multi-media devices, which are equipped with more than one physical interface and, accordingly, can be connected to more than one domain. A scenario describing a two-media device is presented in Figure 5-9. The IDB connects the client associated with the device to both domains (via nodes B1 and A2), and provides inter-domain connection (between nodes B1, A2, similar to one presented in Figure 5-7). The IDB interfaces to nodes B1 and A2 as a regular AE, and also bridges the client AE to either or both of these nodes.

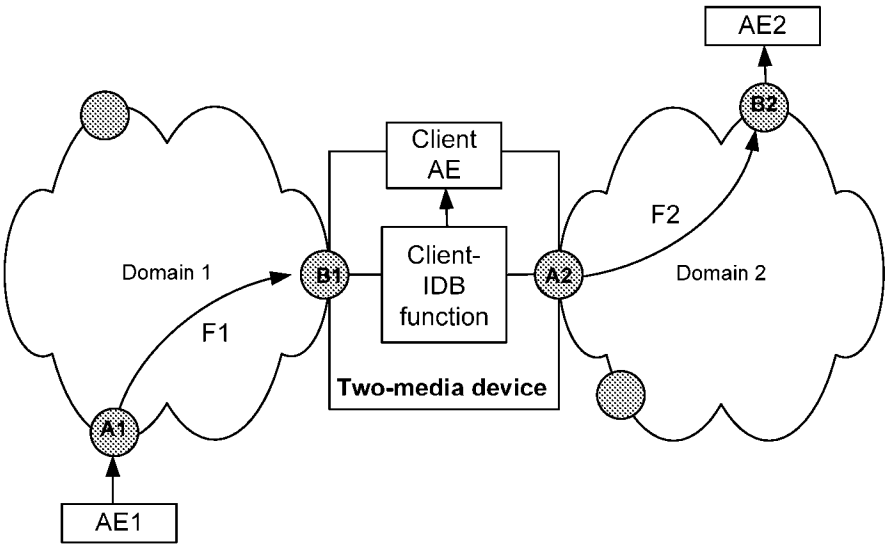

Figure 5-9/G.9960 – Example of communication with a two-media (domain) device

The protocol reference model corresponding to Figure 5-9 is presented in Figure 5-10. It assumes a vendor-proprietary interface between the IDB and the client. However, a standard interface like IEEE 802.3 can be used too.

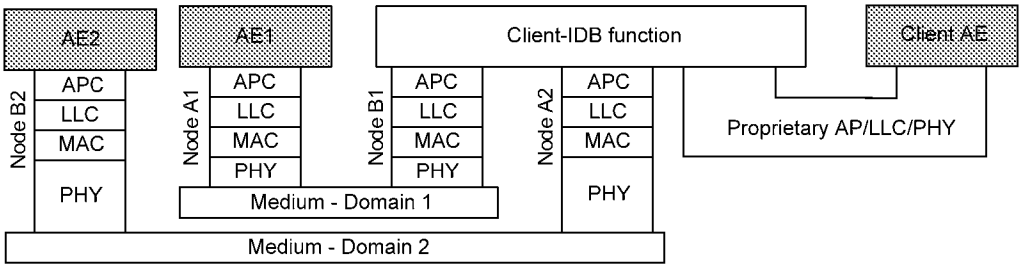

Figure 5-10/G.9960 – Protocol stack of inter-domain communication

5.1.6.1 End-to-end QoS for multi-domain connections

The end-to-end QoS requirements are defined by certain priority level (in case of priority-based QoS), or by traffic parameters such as bit rate and latency (for parameterized QoS). See §5.1.4. In both cases, to meet end-to-end requirements, certain tributary requirements shall be implied on in-domain flows forming the connection and on IDB. In Figure 5-7, the end-to-end QoS requirements for the service routed between nodes A1 and B2 determine tributary QoS requirements for flow F1, carrying the service inside domain 1, and for flow F2, carrying the service inside domain 2, and for the delay introduced by IDB.

In the case of prioritized QoS, the end-to-end QoS requirements can be met if the IDB conveys priority requirements, so that the priority level applied to flow F1 in domain 1 corresponds with the priority level applied to flow F2 in domain 2. In the same way, prioritized QoS shall be supported for routes including more than 2 domains.

In case of parameterized QoS, the end-to-end QoS parameters shall be distributed between in-domain flows and the IDBs. The rules of distribution of end-to-end QoS parameters between multiple domains are for further study.

The IDB throughput shall be higher than the maximum throughput available in either of the domains connected by the IDB. The delay introduced by the IDB should be minimized (the maximum allowed values are for further study). The maximum number of IDBs in the path may be limited for certain service types.

Other parameters of the IDB functionality are vendor discretionary.

5.1.6.2 Security in multi-domain connections

For a multi-domain G.9960 network, secure operation is achieved by setting all its domains to secure mode. Communications between secure and non-secure domains shall not be allowed, unless special security measures are provided by the IDB (on higher protocol levels). These measures are beyond the scope of this Recommendation, same as security measures protecting IDB from outside intrusion (i.e., when the intruder is one of the clients connected to the IDB). In the scope of this Recommendation, IDB are supposed to be secure.

5.1.7 Low power modes

Three modes of operations are defined with the intention of reducing the total power consumption in G.9960 based networks. When the electrical power for equipment connected to the home network is switched on, operation modes for the equipment shall be one of the following:

- Full-power mode: This is the mode in which transmission up to maximum defined bit-rate is possible. In this mode the power consumption is limited only by the defined PSDs.
- Low power mode(s): In these modes only a limited data transmission is running. The equipment enters this mode when specific traffic parameters are met. The values of these parameters are for further study.
- Idle mode: In this mode the equipment is switched on and connected physically to the network, but no traffic at all is transmitted or received by the connected equipment. It should be possible to initiate transmission both from the connected equipment and from other node (or client) connected to the network. Transition from this power mode to full-power mode, when needed, should take no more than 1 second.

During all power modes and transitions between them, the node shall maintain its original DEVICE_ID.

5.2 Reference models

5.2.1 Protocol reference model of HN transceiver

The protocol reference model of an HN transceiver is presented in Figure 5-11. It includes three main reference points: application interface (A-interface), media-independent interface (MII), and medium-dependent interface (MDI). Two interim reference points, x1-interface and x2-interface, are defined in the data link layer, and two other interim reference points, α-interface and δ-interface, are defined in PHY layer, Figure 5-11.

The MDI is a physical interface defined in the terms of physical signals transmitted over a specific medium (see §7.2) and mechanical connection to the medium.

The MII interface is both medium independent and application independent. It is defined in §5.2.2.2 as a functional interface, in terms of functional flows and logical signals.

The A-interface is user application protocol specific (e.g., Ethernet, IP). The functional description of the A-interface is presented in §5.2.2.1. The A-interface is for further study.

All interim interfaces are independent of the type of media and are defined as functional (logical) interfaces in the terms of functional flows and logical signals.

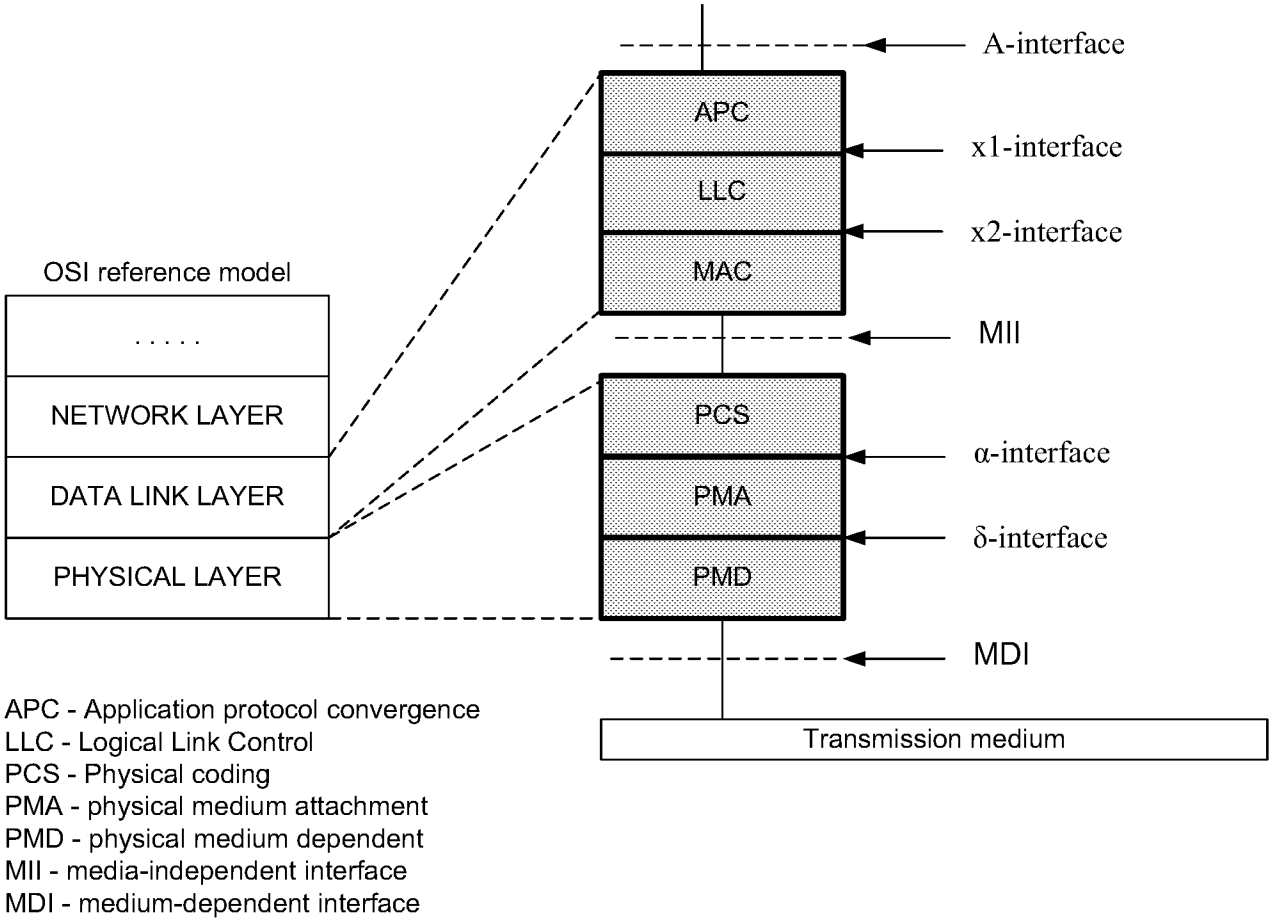

Figure 5-11/G.9960 – Protocol reference model of HN transceiver

The application protocol convergence sub-layer (APC) provides an interface with the application entity (AE), which operates with a client specific protocol, such as ethernet. The APC also provides the bit rate adaptation between the application (client) and the HN.

The logical link control (LLC) sub-layer coordinates transmission of HN nodes in accordance with requests from the domain master. In particular, it is responsible for establishing, managing, resetting and terminating all connections of the node inside the domain. The LLC also enforces Class of Service (CoS) and Quality of Service (QoS) constraints of the flow, defined for its various connections.

The MAC sub-layer controls access of the HN node to the medium using various media access protocols, which are for further study.

The PCS provides bit rate adaptation (data flow control) between the MAC and PHY and encapsulates transmit packets into the PHY frame and adds PHY-related control and management overhead. The PMA provides encoding of PHY frame content for transmission over the medium. The PMD modulates and demodulates PHY frames for transmission over the medium using orthogonal frequency division modulation (OFDM). By implementation, the PMD may include media-dependent adaptors for different media, including frequency shifting for pass-band transmission.

The layers above the data link layer (above the A-interface) are beyond the scope of G.9960. Management functions are not presented in Figure 5-11.

5.2.2 Interfaces - functional description

This section contains the functional description of the G.9960 transceiver interfaces (A, MII, and MDI) in terms of signal flows exchanged between corresponding entities. The description doesn't imply any specific implementation of the transceiver interfaces.

5.2.2.1 A-interface

The A-interface is described in terms of primitives exchanged between the AE and DLL. Two groups of primitives are defined: data primitives and control primitives, as described in Table 5-3. Data primitives represent the data path of the A-interface, while control primitives represent the control path. The format of the primitives is application specific, determined by the AE (application data primitives, ADP).

Table 5-3/G.9960 – A-interface signal flow description

Primitive	Direction	Description
AIF_DATA.REQ	AE → DLL	Data from AE to DLL
AIF_DATA.CNF	DLL→AE	Data confirmation from DLL to AE
AIF_DATA.IND	DLL→ AE	Data from DLL to AE
AIF_CTRL.REQ	AE → DLL	Control from AE to DLL
AIF_CTRL.CNF	DLL → AE	Control confirmation from DLL to AE
AIF_CTRL.IND	DLL → AE	Control from DLL to AE

5.2.2.1.1 AIF_DATA.REQ

The AIF_DATA.REQ primitive defines the transfer of an ADP from the AE to the DLL. The DLL formats the ADP into an MSDU or transfers it to the DLL management.

Semantics of the primitive:

```
AIF_DATA.REQ {
                destination address,
                source address,
                data,
                length,
                service class
                }
```

The destination address may be an individual or a group address identifying the destination.

The source address is an individual address specifically identifying the source of the data unit contained within the ADP.

The data specifies the actual data to be passed.

The length specifies the number of units to be transferred and is specific to the AE.

The service class indicates the quality of service required for this ADP.

5.2.2.1.2 AIF_DATA.CNF

The AIF_DATA.CNF primitive defines a confirmation from the DLL to the AE of the previously received AIF_DATA.REQ primitive and is passed from the DLL to the AE after each received AIF_DATA.REQ.

Semantics of the primitive:

```
AIF_DATA.CNF {
        status
        }
```

The status is a set of parameters (including rejection codes) describing the status of the ADP passed to the DLL in the previous AIF_DATA.REQ primitive.

5.2.2.1.3 AIF_DATA.IND

The AIF_DATA.IND primitive defines the transfer of an ADP from the DLL to the AE. The primitive is transferred to AE whenever the DLL has an ADP ready to be transferred. Semantics of the primitive:

```
AIF_DATA.IND {
        destination address,
        source address,
        data,
        length,
        service class,
        reception status,
        }
```

The destination address may be an individual or a group address identifying the target.

The source address is an individual address specifically identifying the source of the data unit contained within the ADP.

The data specifies the actual data to be passed.

The length specifies the number of units to be transferred and is specific to the AE.

The service class indicates the type of quality of service required for this ADP.

Status shall indicate the validity of the data unit that is delivered via the A-interface to the AE.

5.2.2.1.4 AIF_CTRL.REQ

The AIF_CTRL.REQ primitive defines a control request from the AE to the DLL. The DLL executes the request according to the specified control operation.

Semantics of the primitive:

```
AIF_CTRL.REQ {
        control operand list
        }
```

The control operand list is specific per each control operation.

5.2.2.1.5 AIF_CTRL.CNF

The AIF_CTRL.CNF primitive defines a confirmation from the DLL to the AE of a previously received AIF_CNTRL.REQ primitive and is passed from the DLL to the AE whenever the confirmation on the received AIF_DATA.REQ is required.

Semantics of the primitive:

```
AIF_CTRL.CNF {
                    control operand list
                  }
```

The control operand list is specific per each control operation.

5.2.2.1.6 AIF_CTRL.IND

The AIF_CTRL.IND primitive defines a control indication from the DLL to the AE. This primitive may be used to indicate to the AE whether the DLL is ready or not to receive another ADP.

Semantics of the primitive:

```
AIF_CTRL.IND {

                    control operand list
                    }
```

The control operand list is specific per each control operation.

5.2.2.2 Medium-Independent Interface (MII)

The MII is described in terms of signal flows exchange between the DLL and PHY layer. The MII signal flows are presented in Table 5-4; the direction of each signal flow indicates the entity originating the flow. Both transmit and receive data are exchanged in MAC protocol data units (MPDUs). The format of MPDUs is for further study.

Table 5-4/G.9960 – MII signal flow description

Signal flow	Direction	Description
TX DATA	MAC → PHY	Flow of MPDUs for transmission
TX CLK	PHY → MAC	Transmit timing
RX DATA	PHY → MAC	Flow of received MPDUs
RX CLK	PHY → MAC	Receive timing
RX ERR	PHY → MAC	Error signal accompanies MPDU of a PHY frame received with errors
CRS	PHY → MAC	Carrier sense signal (physical or virtual)
NOTE – Signal flows presented in this table are functional; they are exclusively for descriptive purposes and do not imply any specific implementation.		

The described signal flows indicate the following specifics of the MII:

- the MII bit timing (clock) for both transmit and receive directions is determined by the PHY

- the CRS assists TX DATA flow control in case CSMA is used
- RX_ERR indicates that one or more components of the PHY frame carrying the received MPDU are in error; the DLL is responsible for processing of the packets and deciding which MPDUs to keep, discard, or retransmit.

5.2.2.3 Medium-dependent interface (MDI)

Functional characteristics of the MDI are described by two signal flows:

- transmit signal (TX DATA) is the flow of frames transmitted onto the medium
- receive signal (RX DATA) is the flow of frames received from the medium.

5.2.3 Functional model of an HN transceiver

The functional model of an HN transceiver is presented in Figure 5-12. It addresses a regular node, a master node, and a relay node (including DAP), which differ by their MAC, LLC and upper layer functionalities.

The PMD function depends on the medium on which the transceiver operates. It can be configured for base-band or pass-band operation. The PCS provides bit rate adaptation (data flow control) between the MAC and the PHY and encapsulates transmit MAC frames into PHY frames. The transmit PHY frame is further encoded in the PMA to meet the corresponding PMD. The functionality of the PCS, and the PMA is the same for any medium, but their parameters are medium-specific. By appropriate parameter settings, any HN node can be configured to operate on any type of wiring in both base-band and pass-band modes.

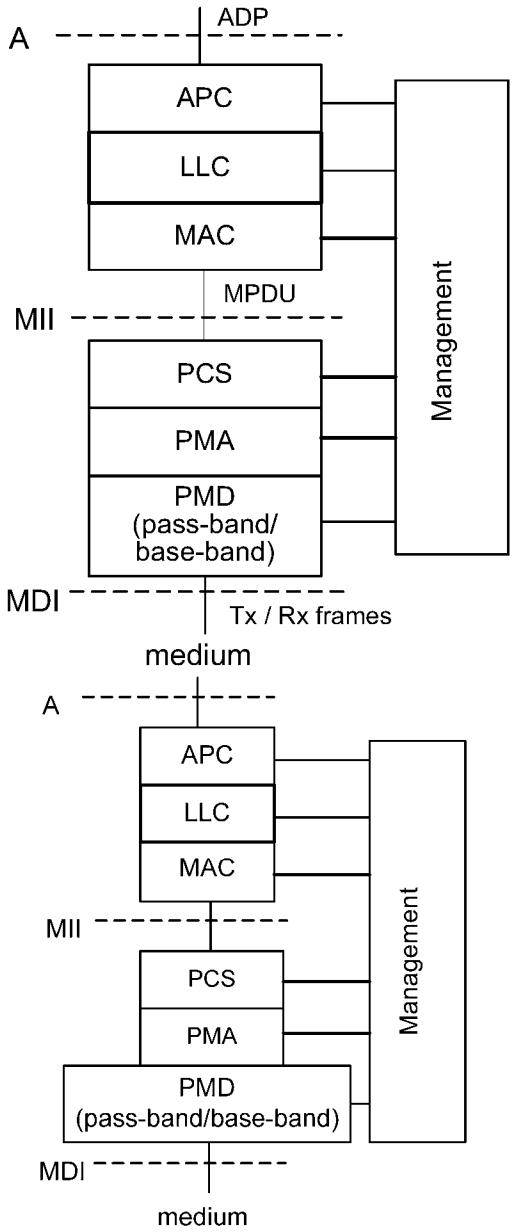

Figure 5-12/G.9960 − Functional model of HN transceiver

The detailed description of the functional model of the PHY layer is presented in §7.1. The detailed description of the functional model of the DLL is for further study.

6 Profiles

Profiles are intended to address G.9960 nodes with significantly different levels of complexity. Details are for further study.

7 Physical layer specification

7.1 Media independent specification

7.1.1 Functional model of the PHY

The functional model of the PHY is presented in Figure 7-1. The MII and MDI are, respectively, two demarcation reference points between the PHY and MAC and between the PHY and transmission medium. Internal reference points δ and α, respectively, show separation between the PMD and PMA and between the PCS and PMA.

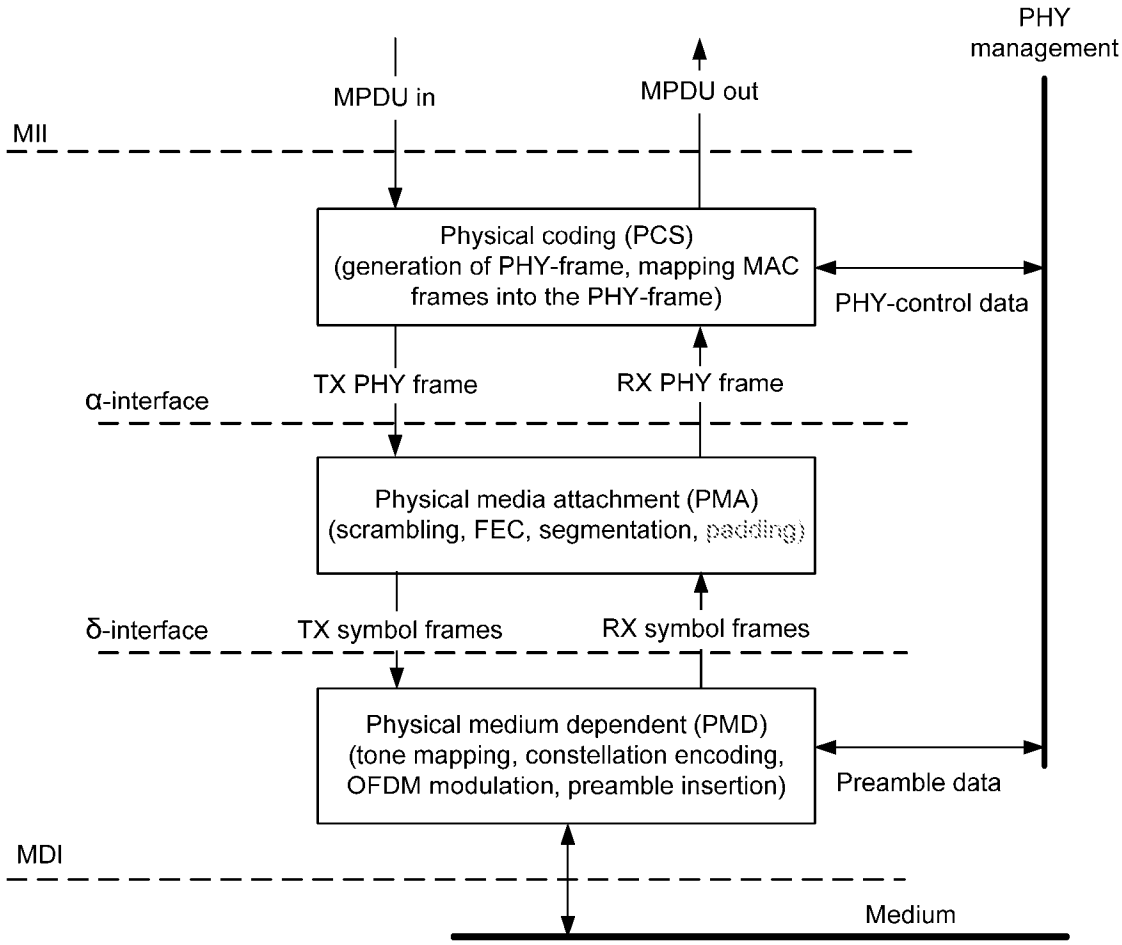

Figure 7-1/G.9960 – Functional model of the PHY

In the transmit direction, data enters the PHY from the MAC via MII by blocks of bytes called MAC protocol data units (MPDUs). The incoming MPDU, whether it belongs to a data frame or a control frame, is mapped into the PHY frame originated in the PCS, scrambled and encoded in the PMA, modulated in the PMD, and transmitted over the medium using OFDM modulation with relevant parameters. In the PMD, a preamble is added to assist synchronization and channel estimation in the receiver.

In the receive direction, frames entering from the medium via the MDI are demodulated and decoded. The recovered MPDUs are forwarded to MAC via the MII. The recovered PHY-frame headers are processed in the PHY to extract the relevant frame parameters specified in §7.1.2.3.

7.1.2 Physical coding sub-layer (PCS)

The functional model of the PCS is presented in Figure 7-2. It is intended to describe in more detail the PCS functional block presented in Figure 7-1.

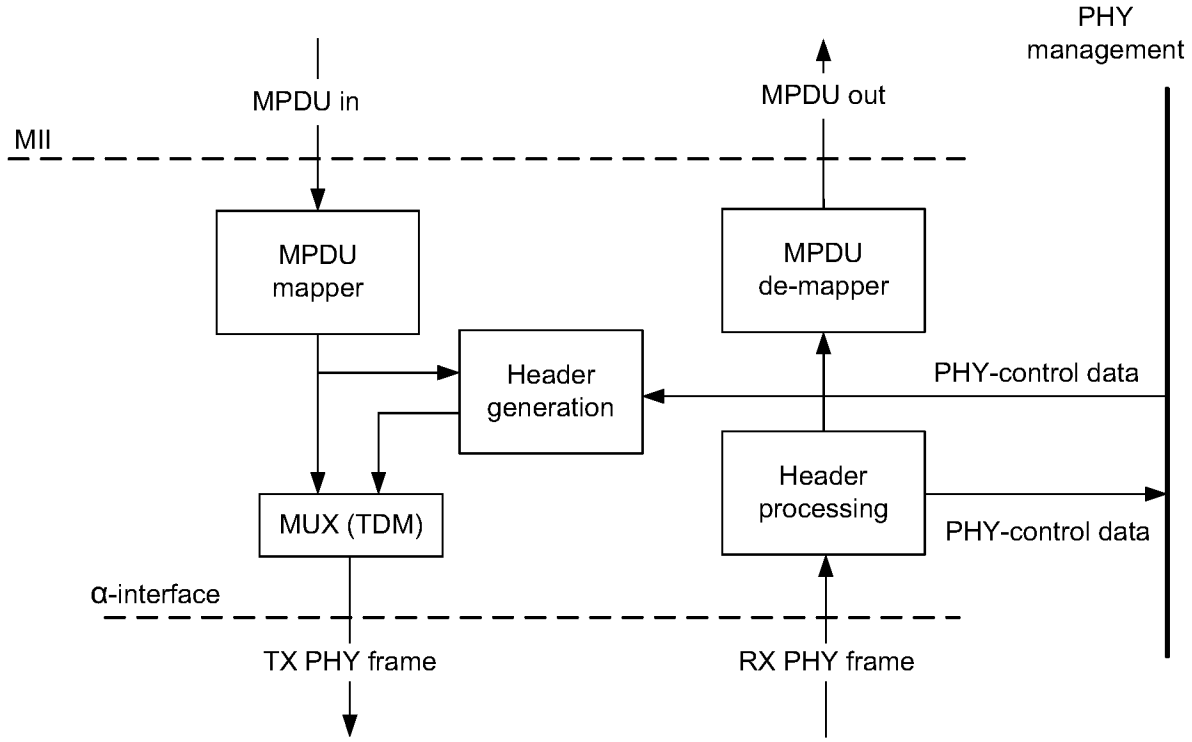

Figure 7-2/G.9960 – Functional model of PCS

In the transmit direction, the incoming MPDU is mapped into a payload field of a PHY frame (§7.1.2.1) as described in §7.1.2.2. Further, the PHY-frame header (§7.1.2.3) is added to form a TX PHY frame. The TX PHY frame is passed via the α-interface for further processing in the PMA.

In the receive direction, the decoded PHY-frame payload and header are processed and originally transmitted MPDUs are recovered from the payloads of properly received PHY frames and submitted to the MII. Relevant control information conveyed in the PHY-frame header is processed and submitted to the PHY management entity, Figure 7-2.

7.1.2.1 PHY frame

The format of the PHY frame is presented in Figure 7-3. The PHY frame at the α-interface includes header, and payload. Preamble is added to the PHY frame in the PMD, as described in §7.1.4.5. Preamble does not bear any user or management data and is intended for synchronization and initial channel estimation.

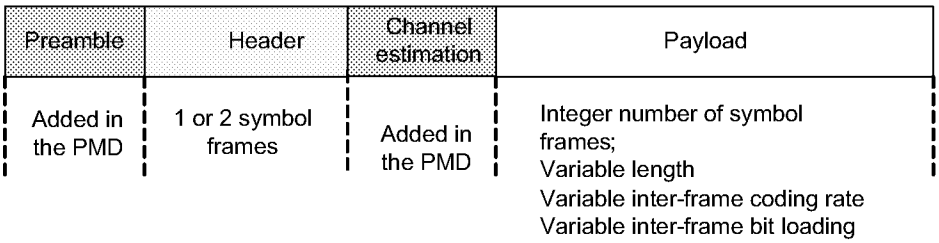

Figure 7-3/G.9960 – Format of the PHY frame

The PHY-frame header and payload shall each contain an integer number of OFDM symbols.

The length of the PHY-frame header always fits integer number of symbols and is transmitted using a single pre-defined set of modulation and coding parameters (see §7.1.3.4).

The length of the payload may vary from frame to frame; payload may be of zero length. For payload, different coding parameters and bit loading can be used in different frames, depending on channel/noise characteristics and QoS requirements.

7.1.2.2 MPDU mapping

The bits of the MPDU shall be mapped into the payload in ascending sequential order. The first bit of the MPDU shall be the first transmitted bit of the payload.

7.1.2.3 PHY-frame header

The PHY-frame header is PHY_H bits long and is composed of a common part and a variable part. The common part contains fields that are common for all PHY-frame types. The variable part contains fields according to the PHY-frame type. PHY-frame type is indicated by the FT field. The PAD fields fit the length of the header of different PHY frame-types to the standard values of PHY_H bits. The content of the header is protected by the 16-bit header check sequence (HCS).

The fields of the PHY-frame header are defined in Table 7-1

Table 7-1/G.9960 – PHY-frame header fields

Field	Octet	Field Size [Bits]	Description	
FT	0	4	Frame type	Common part
DOD	0	4	Domain ID	
SID	1	8	The device ID of the source node	
DID	2	8	The device ID of the destination node	
MI	3	1	Multicast indication identifies whether the DID is a multicast destination	
PHI	3	1	Post header indication identifies whether the first payload symbol after the header is a PRBS symbol or a data symbol	
Reserved	3	6	Reserved by ITU-T	
Duration	4-5	16	The PHY frame transmission duration	
…	6-18			Variable part
HCS	19-20	16	Header check sequence	Common part

7.1.2.3.1 Common part fields

7.1.2.3.1.1 Frame Type (FT)

The Frame type (FT) field is a 4-bit field which indicates the type of the PHY frame transmitted.

Table 7-2 describes the PHY-frame types.

Table 7-2/G.9960 –PHY-frame types

Type	Value	Description
MAP	0	MAP frame
MSG	1	Data and management frame
ACK	2	ACK control frame
RTS	3	RTS control frame
CTS	4	CTS control frame
RMAP	5	Repeated MAP frame
PROBE	6	Probe frame
ACKRQ	7	ACK retransmission request frame
Reserved	8-15	Reserved for future use

7.1.2.3.1.2 Domain ID (DOD)

The DOD is a 4-bit field that identifies the domain to which the source and destination devices of the PHY frame belong. DOD shall be represented as a 4-bit unsigned integer in the valid range from 0 to 15. The method for choosing DOD is for further study.

7.1.2.3.1.3 Source ID (SID)

SID is the device ID that was assigned to the G.9960 source node of the PHY frame during its registration. The SID shall be represented by an 8-bit unsigned integer with valid values in the range from 0 to 250. Value 0 shall be used as the default device ID of a node attempting to join the network.

7.1.2.3.1.4 Destination ID (DID)

The DID is the DEVICE_ID value identifying the G.9960 destination node of the PHY frame. The DID shall be represented by an 8-bit unsigned integer with valid values in the range from 0 to 250. It could be equal to the device ID assigned during node registration, or to the value reserved for broadcast ID or multicast ID.

7.1.2.3.1.5 Multicast Indication (MI)

The multicast indication shall be set when the DID is a multicast/broadcast destination DEVICE_ID.

7.1.2.3.1.6 Post Header Indication (PHI)

The PHI bit, when set, shall indicate to all nodes that the first payload symbol following the header is a PRBS symbol. Otherwise the first payload symbol shall be a data symbol.

7.1.2.3.1.7 Duration

The duration field contains a 16-bit unsigned integer that shall describe the total PHY frame transmission time (preamble, header and payload) for virtual carrier sensing in multiples of 0.25µsec.

In the case of an RTS frame, the total duration indicated in this field shall represent the total duration of the following sequence:

- The transmission time of the RTS PHY frame
- The transmission time of the CTS PHY frame
- The PHY frame that follows the CTS PHY frame, and
- The two inter-frame gaps between the above frames
- If ACK is required, the duration of the inter-frame gap and the ACK-frame

In the case of a CTS frame, the total duration indicated in this field shall repeat the duration expressed in the preceding RTS PHY frame minus the RTS PHY frame transmission time and the inter-frame gap that follows the RTS PHY frame.

7.1.2.3.1.8 Header check sequence (HCS)

The HCS field is intended for PHY-frame header verification. The HCS is a 16-bit cyclic redundancy check (CRC) and shall be computed over all the fields of the PHY-frame header in the order they are transmitted, starting with the MSB of the frame type (FT) field and ending with the LSB of the last field of the PHY Frame.

The HCS shall be computed using the following generator polynomial of degree 16:

$$G(x) = x^{16} + x^{12} + x^{5} + 1.$$

The value of the HCS shall be the remainder after the contents (treated as a polynomial where the first input bit is associated with the highest degree, $X^{PHYH-17}$, where PHY_H is the header length in bits , and the last input bit is associated with X^0) of the calculation fields is multiplied by x^{16} and then divided by $G(x)$.

The HCS field shall be transmitted starting with the coefficient of the highest order term (MSB).

7.1.2.3.2 Variable part specific fields

The following paragraph details the specific PHY-frame header fields for each PHY-frame type variable part.

For some frame types, a pad may be required at the end of frame type specific fields to fit the PHY-frame header variable part size.

7.1.2.3.2.1 MSG PHY-frame type specific fields

Table 7-3 lists the MSG frame type specific PHY-frame header fields.

Table 7-3/G.9960 – MSG PHY-frame type specific fields

Field	Field size [bits]
MSTRDTCT	1
RPRQ	2
RTSRQ	1
BRURQ	For further study
BLKSZ	2
FEC_RATE	3
FLOW_ID/PRI	8
REP	3
FCF	3
SI	4
FRMSN	2
TPN	11
Pad	padding up to PHY_H bits

7.1.2.3.2.1.1 "Master is detected" indication (MSTRDTCT)

MSTRDTCT indicates reception of a MAP. It is a 1-bit field that shall be set by a node, in each PHY-frame header it transmits, when this node has received a MAP (either directly from the domain master or repeated MAP) that the current MAC cycle is associated with. This indication shall be used by nodes (including the backup domain master if it exists) to determine whether the current domain master has failed.

7.1.2.3.2.1.2 Reply required (RPRQ)

RPRQ instructs the receiver whether to respond with acknowledgement for this PHY frame. It is a 2-bit field that shall be coded as shown in Table 7-4.

Table 7-4/G.9960 – RPRQ field possible values

RPRQ value	Interpretation
00	The receiver shall not acknowledge this PHY frame
01	The receiver shall acknowledge via an Imm-ACK frame
10 - 11	Reserved by ITU-T

7.1.2.3.2.1.3 RTS/CTS required (RTSRQ)

RTSRQ indicates whether to use the RTS/CTS sequence. It is a 1-bit field. When RTSRQ is set to one, all nodes shall use the RTS/CTS sequence when communicating with the node that set RTSRQ for all PHY frames after the current PHY frame, until this node indicates otherwise by setting the bit to zero.

7.1.2.3.2.1.4 Bandwidth reservation update request (BRURQ)

This field is for further study.

7.1.2.3.8.1.5 Block size (BLKSZ)

BLKSZ indicates the information block size of the FEC codeword that is used by the transmitter for the payload of the PHY frame. It is a 2-bit field that shall be coded as shown in Table 7-5.

Table 7-5/G.9960 – Interpretation of the BLKSZ field

BLKSZ value	Interpretation
00	for the 120 byte information block size used for payload
01	for the 540 byte information block size used for payload
10-11	Reserved by ITU-T

7.1.2.3.2.1.6 FEC_RATE

FEC_RATE indicates the FEC coding rate that is used for encoding of the payload. It is a 3-bit unsigned integer field that shall be coded as shown in Table 7-6.

Table 7-6/G.9960 – Interpretation of the FEC_RATE field

FEC_RATE value	Interpretation
000	Reserved by ITU
001	1/2
010	2/3
011	5/6
100	16/18
101	20/21
110-111	Reserved by ITU

7.1.2.3.2.1.7 Flow identifier (FLOW_ID) and priority (PRI)

FLOW_ID/PRI is an 8-bit unsigned integer field that shall contain the FLOW_ID of the blocks aggregated in the frame (field values in the range 8-254), or the priority of the blocks aggregated in the frame if the field value is between 0 and 7.

7.1.2.3.2.1.8 Repetitions (REP)

REP indicates the nominal number of repetitions that were used for encoding the payload in this PHY frame. It is a 3-bit unsigned integer field that shall be coded as shown in Table 7-7.

Table 7-7/G.9960 – Repetitions field possible values

REP value	Interpretation
000	Reserved by ITU-T
001	1 (no repetitions)
010	2
011	3
100	4
101	6
110 - 111	Reserved by ITU-T

7.1.2.3.2.1.9 FEC concatenation factor (FCF)

FCF indicates the values of parameters *H* and z (see §7.1.3.3.1). It is a 3-bit unsigned integer field that shall be coded as shown in Table 7-8.

Table 7-8/G.9960 – FEC concatenation factor (FCF) possible values

Value	*H*	z
000	1	0
001	Reserved by ITU-T	Reserved by ITU-T
010	2	0
011	2	1
100	4	0
101	4	1
110	4	2
111	4	3

7.1.2.3.2.1.10 Scrambler initialization (SI)

SI contains the scrambler initialization value ($C_4C_3C_2C_1$) that was used by the transmitter for this frame. It is a 4-bit field that shall be used to initialize the scrambler, as described in §7.1.3.1.

7.1.2.3.2.1.11 Frame sequence number (FRMSN)

FRMSN holds the transmitted frame sequence number sent to the same destination (DID). It is a 2-bit unsigned integer field.

The FRMSN shall be initialized to zero upon the first PHY frame containing payload sent for a certain DID and shall be incremented by one upon each additional PHY frame containing payload sent to the same DID. When the FRMSN value exceeds the maximum value of 3, the FRMSN shall wrap-around to zero.

7.1.2.3.2.1.12 Transmission profile number (TPN)

TPN includes parameters that, in conjuction with SID, allow the receiver to determine the transmission profile used by the transmitter for the particular PHY frame.

One or more TPN values can be used between the same transmitter and receiver for different flows or for different positions within the MAC cycle of the same flow.

It is an 11-bit field that shall indicate the bit allocation table (BAT) of the current PHY frame via the BAT identifier (BAT_ID), the sub-carrier grouping (see §7.1.4.2.4) via the grouping identifier (GRP_ID), and the guard interval used for payload via the guard interval identifier (GI_ID) as shown in Table 7-9.

Table 7-9/G.9960 – Interpretation of the TPN field

Field		Bits	Description
BAT_ID		10:6	Bit allocation table identifier (see Table 7-20)
GRP_ID		5:3	Sub-carrier grouping identifier (see Table 7-10)
GI_ID		2:0	Identifier of the guard interval used for payload (see Table 7-11)

Table 7-10/G.9960 – Format of the GRP_ID

GRP_ID value	[Bits]	Description
0	000	Default - No sub-carrier grouping
1	001	Sub-carrier grouping of 2 sub-carriers
2	010	Sub-carrier grouping of 4 sub-carriers
3	011	Sub-carrier grouping of 8 sub-carriers
4	100	Sub-carrier grouping of 16 sub-carriers
5-7	101-111	Reserved by ITU-T

Table 7-11/G.9960 – Format of the GI_ID

GI_ID value	[Bits]	Description
0-6	000-110	N_{GI} guard interval [samples] $k \times N/32$, $k = 1, 2, 3, \ldots, 7$ where k = GI_ID+1, N is the size of the DFT
7	111	$k = 8$ (GI_ID=7) $N_{GI} = N_{GI\text{-}DF} = N/4$

7.1.2.3.2.2 ACK PHY-frame type specific fields

For further study.

7.1.2.3.2.3 MAP and RMAP PHY-frame type specific fields

Table 7-12 lists the MAP and RMAP frame type specific PHY-frame header fields.

Table 7-12/G.9960 – MAP and RMAP PHY-frame type specific fields

Field	Size in bits
NTR	32
SI	4
Pad	padding up to PHY_H

7.1.2.3.2.3.1 Network time reference (NTR)

NTR is used for synchronizing nodes to the domain master transmit clock. It is a 32-bit unsigned integer field. The NTR shall indicate the time stamp of the first sample of the first OFDM symbol of a MAP or RMAP PHY frame that is sent according to the transmitting node's clock with a resolution of 10ns.

The NTR value shall use modulo arithmetic (modulo 2^{32}) where G.9960 nodes shall be capable to follow the network's clock based on the NTR value.

NOTE – Nodes that are hidden from the domain master shall synchronize to the domain master time via the RMAP PHY frame received from another G.9960 node that repeats the domain master's MAP.

7.1.2.3.2.3.2 Scrambler initialization (SI)

SI contains the scrambler initialization value ($C_4C_3C_2C_1$) that was used by the domain master for this frame. It is a 4-bit field that shall be used to initialize the scrambler, as described in §7.1.3.1.

7.1.2.3.2.4 RTS PHY-frame type specific fields

Table 7-13 lists the RTS PHY-frame type specific PHY-frame header fields:

Table 7-13/G.9960 – RTS PHY-frame type specific fields

Field	Size in bits
CID	8
Pad	padding up to PHY_H

7.1.2.3.2.4.1 CTS proxy ID (CID)

CID contains the DEVICE_ID of the node that should respond in CTS for multicast traffic. It is an 8-bit unsigned integer field with valid values in the range from 1 to 250.

7.1.2.3.2.5 CTS PHY-frame type specific fields

Specific fields of the CTS PHY-frame type are listed in Table 7-14.

Table 7-14/G.9960 – Specific fields of the CTS PHY-frame type

Field	Size in bits
Pad	padding up to PHY_H

7.1.2.3.2.6 PROBE PHY-frame type specific fields

Table 7-15 lists the PROBE PHY-frame type specific PHY-frame header fields:

Table 7-15/G.9960 – PROBE PHY-frame type specific fields

Field	Size in bits
PRBTYPE	4
PRBSYM	5
APSDC	5
Pad	padding up to PHY_H

7.1.2.3.2.6.1 PROBE frame type (PRBTYPE)

PRBTYPE indicates the type of the PROBE frame. It is a 4-bit field that shall be coded as shown in Table 7-16.

Table 7-16/G.9960 – PRBTYPE field values

Value	Interpretation
0000	Silent PROBE frame
0001	Channel assessment PROBE frame
0010-1111	Reserved by ITU-T

7.1.2.3.2.6.2 Probe symbols (PRBSYM)

PRBSYM indicates the number of OFDM payload symbols in the PROBE frame. It is a 5-bit field that shall be coded as shown in Table 7-17

Table 7-17/G.9960 – PRBSYM field values

Value	Interpretation
00000	4 Payload symbols
00001	8 Payload symbols
00010	12 Payload symbols
00011	16 Payload symbols
….	….
01111	64 Payload symbols
1xxxx	Reserved by ITU-T

7.1.2.3.2.6.3 Actual PSD ceiling (APSDC)

APSDC indicates the PSDC value that is used in the current transmitting signal. The field shall be coded as a 5-bit unsigned value. The valid values are in the range from 0 to 25, plus 0x1F. Values from 0 to 25 correspond to actual an PSD ceiling in the range of –50 dBm/Hz to –100 dBm/Hz in 2 dB steps. The special value 0x1F indicates that no PSD ceiling is applied.

7.1.2.3.2.7 ACKRQ frame type specific fields

For further study.

7.1.3 Physical medium attachment (PMA) sub-layer

The functional model of the PMA is presented in Figure 7-4. It is intended to describe in more detail the PMA functional block presented in Figure 7-1.

In the transmit direction, the incoming PHY frame (except for preamble and channel estimation symbols) at the α-interface has a format as defined in §7.1.2. Both the header bits and the payload bits of the incoming frame are scrambled as described in §7.1.3.1. The header bits of the incoming frame are encoded as described in §7.1.3.4. The payload bits are encoded, as described in §7.1.3.3. The parameters of payload encoder are controlled by the PHY management entity.

After encoding, the header and payload are each segmented into an integer number of symbol frames as described in §7.1.3.5.1. The obtained symbol frames of the header and the payload are submitted to the PMD (at the δ-interface) for modulation and transmission over the medium.

In the receive direction, all necessary inverse operations of decoding, and de-scrambling are performed on the received symbol frames. The recovered PHY-frame header and payload are submitted to the α-interface for further processing in the PCS.

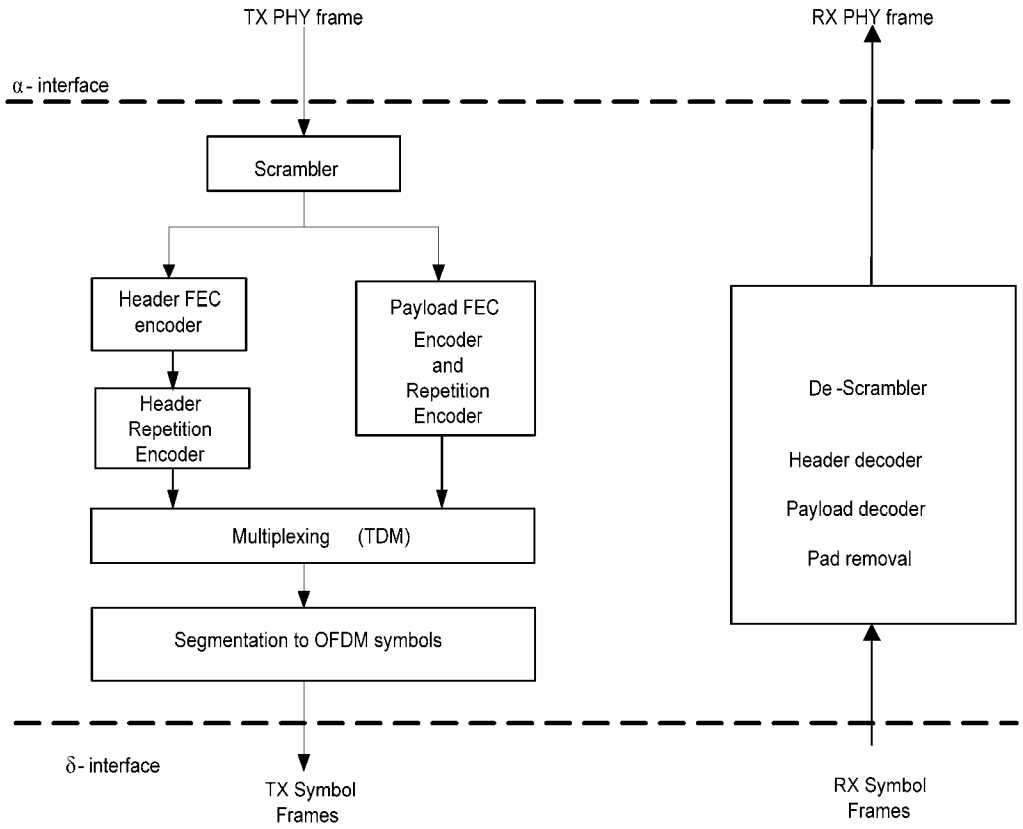

Figure 7-4/G.9960 – Functional model of PMA

7.1.3.1 Scrambling

All data starting from the first bit of the PHY-frame header and ending by the last bit of the payload shall be scrambled with a pseudo-random sequence generated by the linear feedback shift register (LFSR) with the polynomial $p(x)=x^{23}+x^{18}+1$, as shown in Figure 7-5.

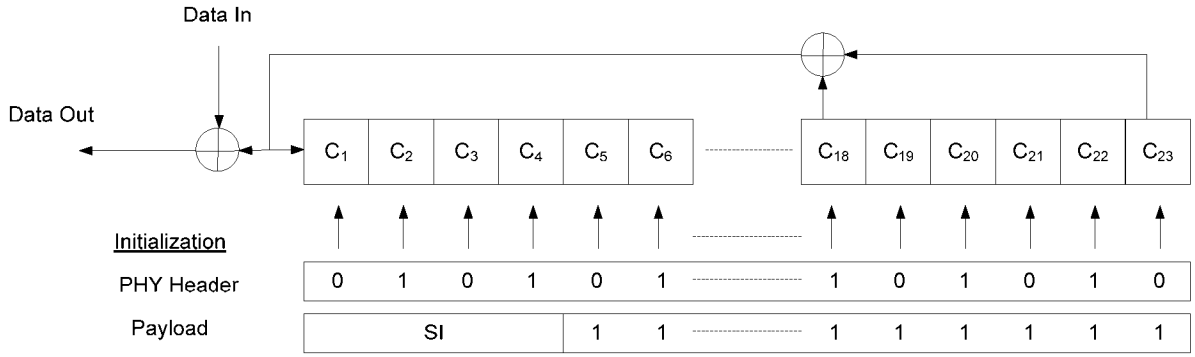

Figure 7-5/G.9960 – Scrambler; $p(x) = x^{23}+x^{18}+1$

The LFSR generator shall be initialized at the first bit of the header with the initialization vector equal to 0x2AAAAA (where the LSB corresponds to C_1); this initialization is used for scrambling of the header data. A second initialization may be performed immediately after the header, at the first bit of the payload, and is used for scrambling of the payload data. For the second initialization, the first four bits of the LFSR (C_1 to C_4) shall be set to the value of SI (Scrambler Initialization), while all other bits C_5 to C_{23} shall be initialized to 1. The value of SI = $C_4C_3C_2C_1$ is communicated in the header as described in §7.1.2.3.

The special value 0x0 for SI indicates that the scrambler is not re-initialized between the header and payload. The initialization of the SI field to values other than the special value is optional.

NOTE – the method for generating SI values is beyond the scope of this Recommendation.

7.1.3.2 FEC encoding

The FEC encoding scheme is shown in Figure 7-6. The scheme consists of a systematic QC-LDPC-BC encoder and a puncturing mechanism. The parameters of the FEC encoding scheme are:

- the number of incoming information bits, K (information block of bits);
- the number of coded bits, N_M (coded block of bits);
- the number of parity-check bits, N_M-K;
- the number of output bits, $N_{FEC} \leq N_M$, (FEC codeword, whose size depends on the puncturing pattern);
- the mother coding rate, $R_M = K/N_M$, defined as the coding rate before puncturing.
- the coding rate, $R = K/N_{FEC}$, defined as the coding rate after puncturing.

The information block size shall be one of the values specified in Table 7-19.

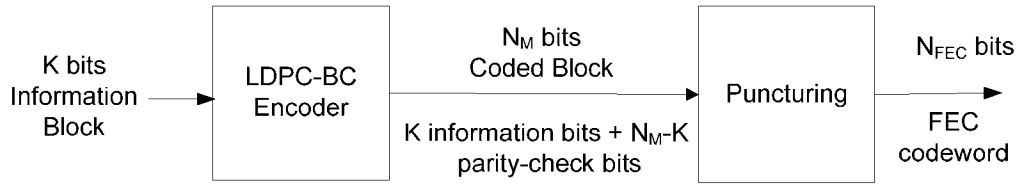

Figure 7-6/G.9960 – FEC Encoder

The encoder shall support mother codes with rates $R_M = 1/2$, $R_M = 2/3$ and $R_M = 5/6$. From these mother codes, codes with higher coding rates shall be obtained through puncturing, as described in §7.1.3.2.1.1. The Puncturing block shall support patterns providing all coding rates presented in Table 7-19.

The coding rate of the mother code, $R_M = K / N_M$, is determined by a $(N_M - K) \times N_M$ size parity-check matrix $\mathbf{H}$ composed by an array of $c \times t$ circulant $b \times b$ sub-matrices $\mathbf{A}_{i,j}$:

$$\mathbf{H} = \begin{bmatrix} \mathbf{A}_{1,1} & \mathbf{A}_{1,2} & \cdots & \mathbf{A}_{1,t} \\ \mathbf{A}_{2,1} & \mathbf{A}_{2,2} & \cdots & \mathbf{A}_{2,t} \\ \vdots & \vdots & \ddots & \vdots \\ \mathbf{A}_{c,1} & \mathbf{A}_{c,2} & \cdots & \mathbf{A}_{c,t} \end{bmatrix}.$$

The parameters c, t ($0 < c \le t$) imply a rate $R_M = (t - c)/t$. By selecting different sets of c, t ,different rates can be obtained.

The sub-matrices $\mathbf{A}_{i,j}$ are either a rotated identity or a zero matrices and have a size of $b \times b$, where parameter $b = N_M / t$ is called the *expansion factor* of $\mathbf{H}$ and controls the code block size, N_M.

The parity-check matrix, **H**, is described in its compact form:

$$\mathbf{H}_c = \begin{bmatrix} a_{1,1} & a_{1,2} & \cdots & a_{1,t} \\ a_{2,1} & a_{2,2} & \cdots & a_{2,t} \\ \vdots & \vdots & \ddots & \vdots \\ a_{c,1} & a_{c,2} & \cdots & a_{c,t} \end{bmatrix}$$

A zero sub-matrix in position (i, j) is labeled with $a_{i,j} = -1$, and a rotated identity sub-matrix is labelled with a positive integer number $a_{i,j}$ defining the number of right column shifts $\hat{a}_{i,j}$ modulo b of the identity matrix. The relation between $a_{i,j}$ and $\hat{a}_{i,j}$ is given by

$$\hat{a}_{i,j} = \begin{cases} a_{i,j} & a_{i,j} < 0, \\ \left\lfloor a_{i,j} \cdot \dfrac{b}{96} \right\rfloor & a_{i,j} \ge 0. \end{cases}$$

where $\lfloor x \rfloor$ is the integer part of variable x.

The compact form of parity-check matrix of mother code H_c with rate R_M=1/2 (t = 24, c = 12) shall be:

```
-1 94 73 -1 -1 -1 -1 -1 55 83 -1 -1  7  0 -1 -1 -1 -1 -1 -1 -1 -1 -1 -1
-1 27 -1 -1 -1 22 79  9 -1 -1 -1 12 -1  0  0 -1 -1 -1 -1 -1 -1 -1 -1 -1
-1 -1 -1 24 22 81 -1 33 -1 -1 -1  0 -1 -1  0  0 -1 -1 -1 -1 -1 -1 -1 -1
61 -1 47 -1 -1 -1 -1 -1 65 25 -1 -1 -1 -1 -1  0  0 -1 -1 -1 -1 -1 -1 -1
-1 -1 39 -1 -1 -1 84 -1 -1 41 72 -1 -1 -1 -1 -1  0  0 -1 -1 -1 -1 -1 -1
-1 -1 -1 -1 46 40 -1 82 -1 -1 -1 79  0 -1 -1 -1 -1  0  0 -1 -1 -1 -1 -1
-1 -1 95 53 -1 -1 -1 -1 -1 14 18 -1 -1 -1 -1 -1 -1 -1  0  0 -1 -1 -1 -1
-1 11 73 -1 -1 -1  2 -1 -1 47 -1 -1 -1 -1 -1 -1 -1 -1 -1  0  0 -1 -1 -1
12 -1 -1 -1 83 24 -1 43 -1 -1 -1 51 -1 -1 -1 -1 -1 -1 -1 -1  0  0 -1 -1
-1 -1 -1 -1 -1 94 -1 59 -1 -1 70 72 -1 -1 -1 -1 -1 -1 -1 -1 -1  0  0 -1
-1 -1  7 65 -1 -1 -1 -1 39 49 -1 -1 -1 -1 -1 -1 -1 -1 -1 -1 -1 -1  0  0
43 -1 -1 -1 -1 66 -1 41 -1 -1 -1 26  7 -1 -1 -1 -1 -1 -1 -1 -1 -1 -1  0
```

The compact form of parity-check matrix of mother code H_c with rate R_M=2/3 (t = 24, c = 8) shall be:

```
  2 -1 19 -1 47 -1 48 -1 36 -1 82 -1 47 -1 15 -1 95  0 -1 -1 -1 -1 -1 -1
 -1 69 -1 88 -1 33 -1  3 -1 16 -1 37 -1 40 -1 48 -1  0  0 -1 -1 -1 -1 -1
 10 -1 86 -1 62 -1 28 -1 85 -1 16 -1 34 -1 73 -1 -1 -1  0  0 -1 -1 -1 -1
 -1 28 -1 32 -1 81 -1 27 -1 88 -1  5 -1 56 -1 37 -1 -1 -1  0  0 -1 -1 -1
 23 -1 29 -1 15 -1 30 -1 66 -1 24 -1 50 -1 62 -1 -1 -1 -1 -1  0  0 -1 -1
 -1 30 -1 65 -1 54 -1 14 -1  0 -1 30 -1 74 -1  0 -1 -1 -1 -1 -1  0  0 -1
 32 -1  0 -1 15 -1 56 -1 85 -1  5 -1  6 -1 52 -1  0 -1 -1 -1 -1 -1  0  0
 -1  0 -1 47 -1 13 -1 61 -1 84 -1 55 -1 78 -1 41 95 -1 -1 -1 -1 -1 -1  0
```

The compact form of parity-check matrix of mother code H_c with rate R_M=5/6 (t = 24, c = 4) shall be:

```
 1 25 55 -1 47  4 -1 91 84  8 86 52 82 33  5  0 36 20  4 77 80  0 -1 -1
-1  6 -1 36 40 47 12 79 47 -1 41 21 12 71 14 72  0 44 49  0  0  0  0 -1
51 81 83  4 67 -1 21 -1 31 24 91 61 81  9 86 78 60 88 67 15 -1 -1  0  0
50 -1 50 15 -1 36 13 10 11 20 53 90 29 92 57 30 84 92 11 66 80 -1 -1  0
```

The codeword at the output of the Puncturing block is of size $N_{FEC} \leq N_M$. The bits shall be output in the ascending order of codeword indices determined by vector **v'** (see §7.1.3.2.1.1); with this order the first information bit incoming the encoder will be the first at the output of the puncturing.

7.1.3.2.1 Encoder

The encoder shall support coded block sizes and rates presented in Table 7-19. The parity-check matrix **H** used to encode a block of information bits is selected according to the mother code indicated in Table 7-19.

The encoding process shall be as follows:

1. A group of incoming K information bits $\mathbf{u} = [u_0, u_1, ..., u_{K-1}]$ are collected and copied to the output of the encoder to form a block of systematic code bits.

2. N_M-K parity-check bits, $\mathbf{p} = [p_0, ..., p_{N_M-K-1}]$, are computed using the parity-check matrix $\mathbf{H}$ and the information block $\mathbf{u}$. The resulting coded block $\mathbf{v} = [\mathbf{u} \mid \mathbf{p}]$ shall satisfy the parity check equations $\mathbf{vH}^T = \mathbf{0}$. Here $\mathbf{0}$ is a zero row vector of dimension N_M-K.
3. The N_M-K parity check bits $\mathbf{p}$ are copied to the output of the encoder as a block of parity-check bits $\mathbf{p} = [p_0, ..., p_{N_M-K-1}]$ to form the output coded block $\mathbf{v} = [\mathbf{u} \mid \mathbf{p}] = [v_0, v_1, ..., v_{N_M-1}]$
4. The output of the encoder $\mathbf{v}$ is the input to the Puncturing block (see Figure 7-6)

NOTE – One method of encoding is to determine a systematic generator matrix $\mathbf{G}$ from $\mathbf{H}$ such that $\mathbf{GH}^T = \mathbf{0}$. A K-bit information block $\mathbf{u} = [u_0, u_1, ..., u_{K-1}]$ can be encoded by the systematic generator matrix $\mathbf{G}$ via the operation $\mathbf{v} = \mathbf{uG}$ to become a N_M-bit coded block $\mathbf{v} = [v_0, v_1, ..., v_{N_M-1}] = [\mathbf{u} \mid \mathbf{p}]$, where $\mathbf{p} = [p_0, ..., p_{N_M-K-1}]$ are the parity-check bits. Encoding an LDPC code from $\mathbf{G}$ can be quite complex. However, the QC-LDPC-BC codes specified here are such that very low complexity encoding directly from $\mathbf{H}$ is possible.

7.1.3.2.1.1 Puncturing

Puncturing shall discard some of the coded block bits to achieve a higher coding rate (R). Puncturing is applied to both information and parity-check bits. The puncturing block uses puncturing patterns specified in Table 7-18. The puncturing patterns are denoted as $\mathbf{pp}_T^{(i)}$, where T is the length of the puncturing pattern and i is the number of zeros in the pattern.

Table 7-18/G.9960 – Puncturing patterns

	Puncturing pattern
$\mathbf{pp}_{16}^{(0)}$	[1 1 1 1 1 1 1 1 1 1 1 1 1 1 1 1]
$\mathbf{pp}_{16}^{(1)}$	[1 1 1 1 1 1 1 1 1 1 1 1 1 1 1 0]
$\mathbf{pp}_{1152}^{(144)}$	$[\underbrace{1\ 1\ \cdots\ 1}_{240}\ \underbrace{0\ 0\ \cdots\ 0}_{48}\ \underbrace{1\ 1\ \cdots\ 1}_{720}\ \underbrace{0\ 0\ \cdots\ 0}_{96}\ \underbrace{1\ 1\ \cdots\ 1}_{48}]$
$\mathbf{pp}_{5184}^{(648)}$	$[\underbrace{1\ 1\ \cdots\ 1}_{216}\ \underbrace{0\ 0\ \cdots\ 0}_{216}\ \underbrace{1\ 1\ \cdots\ 1}_{4320}\ \underbrace{0\ 0\ \cdots\ 0}_{432}]$

NOTE:

The pattern $\mathbf{pp}_{16}^{(0)}$ doesn't result in any coding rate changes and is introduced to be consistent with the puncturing notation.

The coded block $\mathbf{v}$ incoming the puncturing block shall be processed using the puncturing pattern $\mathbf{pp}_T^{(i)}$ as follows:

For the pattern $\mathbf{pp}_T^{(i)} = [pp_0^{(i)},...,pp_{T-1}^{(i)}]$, the puncturing block shall omit all incoming coded bits $v_t, t = 0,...,N_M - 1$ for which $pp_{t \bmod T}^{(i)} = 0$. Hence, the resulting output FEC codeword will be $\mathbf{v}' = [v'_0, v'_1,..., v'_{N_{FEC}-1}]$ with $N_{FEC} \leq N_M$.

7.1.3.2.2 FEC encoding parameters

The FEC encoding scheme shall support encoding parameters specified in Table 7-19.

Table 7-19/G.9960 – FEC encoding parameters

	Coding rate, R	Information block size, K	Puncturing pattern, pp	Mother code rate, R_M	FEC codeword size, N_{FEC}
For Header	1/2	$PHY_H = 168$	$\mathbf{pp}_{16}^{(0)}$	1/2	336
For Payload	1/2	960	$\mathbf{pp}_{16}^{(0)}$	1/2	1920
	1/2	4320	$\mathbf{pp}_{16}^{(0)}$	1/2	8640
	2/3	960	$\mathbf{pp}_{16}^{(0)}$	2/3	1440
	2/3	4320	$\mathbf{pp}_{16}^{(0)}$	2/3	6480
	5/6	960	$\mathbf{pp}_{16}^{(0)}$	5/6	1152
	5/6	4320	$\mathbf{pp}_{16}^{(0)}$	5/6	5184
	16/18	960	$\mathbf{pp}_{16}^{(1)}$	5/6	1080
	16/18	4320	$\mathbf{pp}_{16}^{(1)}$	5/6	4860
	20/21	960	$\mathbf{pp}_{1152}^{(144)}$	5/6	1008
	20/21	4320	$\mathbf{pp}_{5184}^{(648)}$	5/6	4536

7.1.3.3 Payload encoding

The functional model of the payload encoder is presented in Figure 7-7. It contains an FEC encoder and a Payload Repetition Encoder (PRE) to support robust communication mode (RCM).

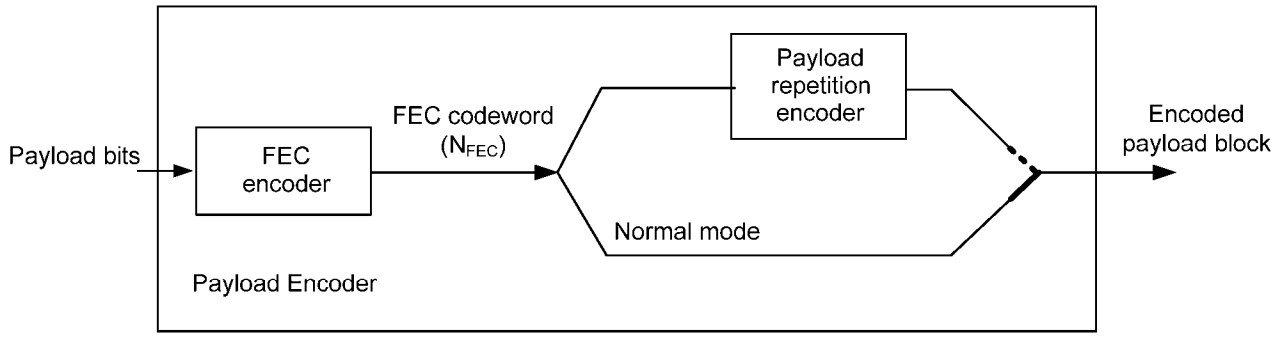

Figure 7-7/G.9960 – Functional diagram of the Payload Encoder (set to Normal mode)

The incoming PHY-frame payload shall be divided into sequential blocks of information bits, K bits per block. Each block of information bits shall be encoded by the FEC, as described in §7.1.3.2. The valid values of K, the coded block size N_{FEC}, and the coding rate R, are presented in Table 7-19. The bits of each information block shall be in the same order as they are in the payload; the payload bit to be transmitted first shall be the first in the corresponding information block.

In normal mode of operation, PRE is disabled. The FEC codewords shall be passed directly to the output of the Payload Encoder and concatenated into the encoded payload block; their order shall be the same as the order of corresponding information blocks at the input of the Payload Encoder.

In case of RCM, each FEC codeword is further encoded by the PRE, as described in §7.1.3.3.1. The PRE-encoded FEC codewords are concatenated into the encoded payload block as defined in §7.1.3.3.1.

7.1.3.3.1 Payload repetition encoding

Payload Repetition Encoder (PRE) shall support the number of repetitions N_{REP} = 2, 3, 4 and 6. The used number of repetitions shall be advertised in the REP field in the PHY-frame header.

The PRE shall operate as follows. Each incoming FEC codeword shall be first copied N_{REP} times. Each copy shall be divided into S sections, numbered from 0 to S-1, with B bits in each section, as follows:

- Bits of the FEC codeword shall be mapped into sections in ascending sequential order; the bit of the FEC codeword to be transmitted first shall be the first bit (b_0) of Section 0;
- If after all bits of the FEC codeword are mapped, the last q bit positions of the last section remain empty, these position shall be filled by the first q bits of Section 0 in ascending sequential order.

Mapping of an FEC codeword onto sections is shown in Figure 7-8.

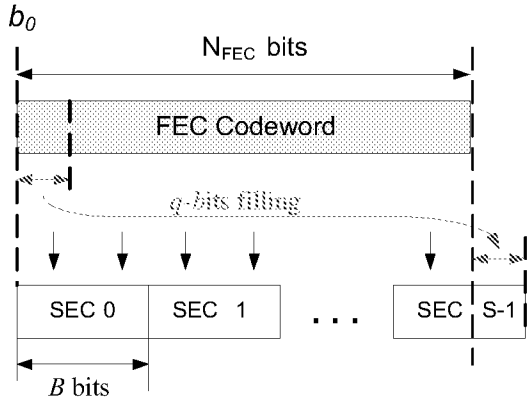

Figure 7-8/G.9960 – Mapping of a FEC codeword onto sections

The number of bits per section shall be $B = floor(k_P/N_{REP})$, where k_P is the total number of bits that can be loaded onto the payload OFDM symbol according to the current BAT. The number of sections per FEC codeword is: $S = ceiling(N_{FEC}/B)$.

If the computed value of S is 1, H consequent FEC codewords may be concatenated. The number of sections in this case shall be: $S = ceil(H \times N_{FEC}/B)$, where H is selected to provide $S > 1$ for the given values of N_{FEC}, N_{REP} and k_P. Concatenation of codewords may be applied only when the short FEC information block size is used. The total size of the concatenated codewords shall not exceed the maximum FEC codeword size.

If the number of FEC codewords in the payload is not a multiple of H, the necessary $z < H$ dummy FEC codewords shall be added. These dummy codewords shall be copies of the last FEC codeword of the same payload. The values of H (1, 2 and 4) and of z (0 to H–1) shall be indicated in the PHY-frame header.

The PRE shall output sections sequentially, in groups of S sections. Each group carries a copy of the FEC codeword. The number of groups per each FEC codeword is N_{REP}. The order of bits in each section shall be the same as these bits appear in the incoming FEC codeword.

The format of the encoded payload block with PRE enabled is presented in Figure 7-9. The total number of sections in the encoded payload block is $N_{REP} \times S$.

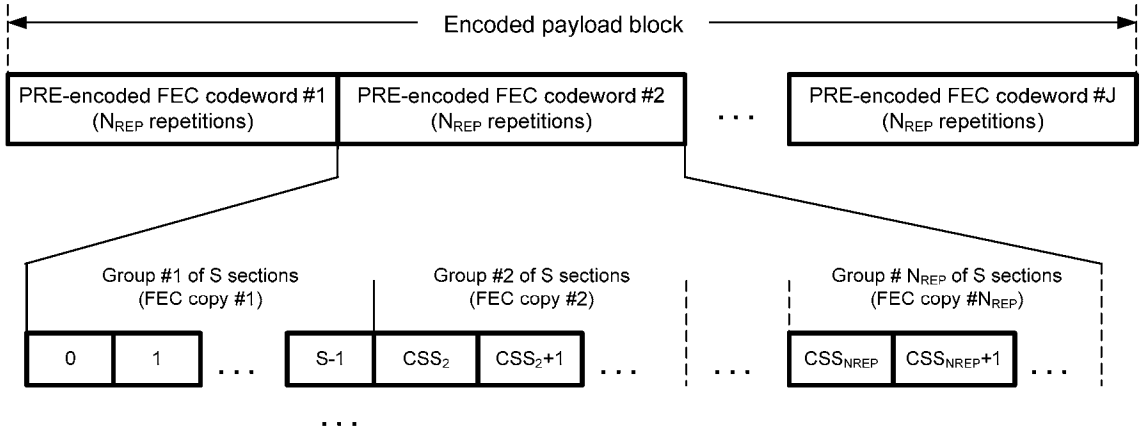

Figure 7-9/G.9960 – The format of the encoded payload block (payload consists of J FEC codewords)

The order of sections in the first group shall be ascending, from 0 to S-1; the order of sections in all subsequent groups shall be cyclically shifted. The shift is defined by the Cyclic Section Shift (CSS) vector $\{0\ CSS_2\ CSS_3 \ldots CSS_{NREP}\}$ with a length of N_{REP}, where CSS_L is the sequential number of the section to be transmitted first in the L-th group of sections. The value of CSS shall be computed using the following rule:

For $N_{REP} = 2$:

if (S mod 2) = 0 CSS:= {0,1};

else CSS:= {0,0};

For $N_{REP} = 4$:

if (S mod 4) = 0 CSS:= {0,1,2,3};

else if (S mod 2) = 0 CSS:= {0,0,1,1};

else CSS:= {0,0,0,0};

For $N_{REP} = 3$:

if (S mod 3) = 0 CSS:= {0,1,2};

else CSS:= {0,0,0};

For $N_{REP} = 6$:

if (S mod 6) = 0 CSS:= {0,1,2,3,4,5};

else if (S mod 3) = 0 CSS:= {0,0,1,1,2,2};

else if (S mod 2) = 0 CSS:= {0,0,0,1,1,1};

else CSS:= {0,0,0,0,0,0};

NOTE: As an example, with CSS = 3 for a group of S = 4 sections, these sections will be transmitted in the following order: 3, 0, 1, 2. The first group of sections, for comparison, is transmitted: 0, 1, 2, 3.

7.1.3.4 Header encoder

The functional model of the header encoder is presented in Figure 7-10. It contains an FEC encoder and a Header Repetition Encoder (HRE).

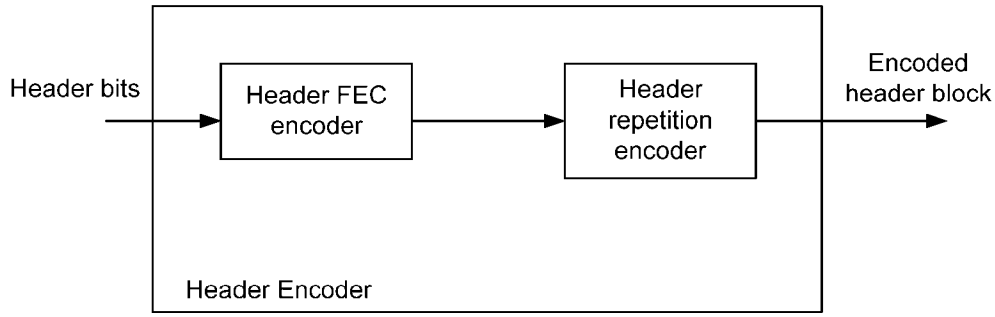

Figure 7-10/G.9960 – Functional diagram of the Header Encoder

The bits of the PHY-frame header shall input the Header FEC encoder in their original order and encoded as described in §7.1.3.2. The size of the FEC codeword and the coding rate of the Header FEC encoder are described in Table 7-19.

The FEC codeword enters the HRE. The HRE shall operate as follows:

- The FEC codeword shall be first copied M times, where M = ceiling ($D \times k_H / N_{FEC}$), k_H is the number of bits to be loaded onto the OFDM symbol carrying the header, and D is the number of symbols to be used for header transmission
- The encoded header block shall be formed by concatenation of M copies of the header FEC encoder output. As each codeword is cascaded to one another, the bits (b_i) within a codeword shall be cyclically shifted by 2 bits as follows:
  - The 1st FEC codeword copy shall be formed as $\{b_0, b_1, \ldots, b_{NFEC-2}, b_{NFEC-1}\}$.
  - The 2nd FEC codeword copy shall be formed as $\{b_2, b_3, \ldots, b_{NFEC-1}, b_0, b_1\}$.
  - The 3rd FEC codeword copy shall be formed as $\{b_4, b_5, \ldots, b_{NFEC-1}, b_0, b_1, b_2, b_3\}$.
  - …
  - The Mth FEC codeword copy, where M > 3, shall be formed as $\{b_{(2\times M-2)}, b_{(2\times M-1)}, \ldots, b_{NFEC-1}, b_0, b_1, \ldots, b_{(2\times M-4)}, b_{(2\times M-3)}\}$.

Valid values of D are either 1 or 2 (with D=1 being the default).

NOTE: Since the coding rate used for header encoding is ½, the number of bits in the FEC codeword is always even, and the number of bits in the encoded header block is even.

7.1.3.5 Segmentation into symbol frames

The encoded payload block from the output of Payload encoder and the encoded header block from the output of the Header encoder shall be segmented into symbol frames. The maximum number of bits in the symbol frame shall not exceed the values of k_P for payload symbol frames and k_H for

header symbol frame. Payload and header symbol frames shall be passed to the PMD, as described in Figure 7-4.

7.1.3.5.1 Payload segmentation

The encoded payload block shall be segmented into one or more symbol frames.

In normal mode, the first symbol frame shall contain the first k_P bits of the encoded payload block, the second frame shall contain the second k_P bits of the encoded payload block and so on, until the last symbol frame. If the remaining number of bits in the encoded payload is less than k_P, the last symbol frame shall remain incomplete. The unused sub-carriers of the OFDM symbol corresponding to the last symbol frame shall be modulated by a pseudo-random sequence of bits, as described in §7.1.4.2.6.

In RCM, the first symbol frame shall contain the first N_{REP} sections of the encoded payload block, the second frame shall contain the second N_{REP} sections of the encoded payload block, and so on, until the last symbol frame. If the number of bits in N_{REP} sections is less than k_P, symbol frames shall remain incomplete. The unused sub-carriers of the corresponding OFDM symbols shall be modulated by a pseudo-random sequence of bits, as described in §7.1.4.2.6.

7.1.3.5.2 Header segmentation

The encoded header block shall be segmented into D symbol frames (D = 1 or 2).

The first k_H bits of the encoded header block shall be mapped into the first symbol frame.

If D = 1, the rest of the bits of the encoded header block shall be discarded.

If D = 2, the second k_H bits shall be taken with an offset of half an FEC block, i.e., starting from the bit number $N_{FEC}/2$ of the encoded header block, and mapped into the second symbol frame. The rest of the bits in the encoded header block shall be discarded.

7.1.3.6 Probe frame

The Probe frame is intended for the channel assessment procedure. The header of the Probe frame shall be as defined in §7.1.2.3. The payload of the Probe frame (at the δ-reference point) shall contain a number of symbol frames with no data (all supported sub-carriers (SSCs) are inactive sub-carriers (ISCs)) as described in field PRBSYM in §7.1.2.3.2.6.1. The number of the symbols shall be indicated via the PRBSYM field in §7.1.2.3.2.6.1. The inactive sub-carriers of the corresponding OFDM symbols shall be modulated by a pseudo-random sequence of bits, as described in §7.1.4.2.6.

The number of symbol frames (and OFDM symbols) in the Probe frame is indicated in the PHY-frame header.

7.1.4 Physical medium dependent (PMD) sub-layer

The functional model of the PMD is presented in Figure 7-11. In the transmit direction, the Tone mapper divides the incoming symbol frames of the Header and Payload into groups of bits and associates each group of bits with a specific sub-carrier onto which this group shall be loaded, as specified in §7.1.4.2. The constellation encoder converts every group of the incoming bits into complex numbers which are, respectively, the real and imaginary part of the constellation point on which the particular group of bits is loaded for this subcarrier. The constellation mapping process is described in §7.1.4.3.1. The unused sub-carriers are modulated by a pseudo-random bit sequence generated as described in §7.1.4.2.6.

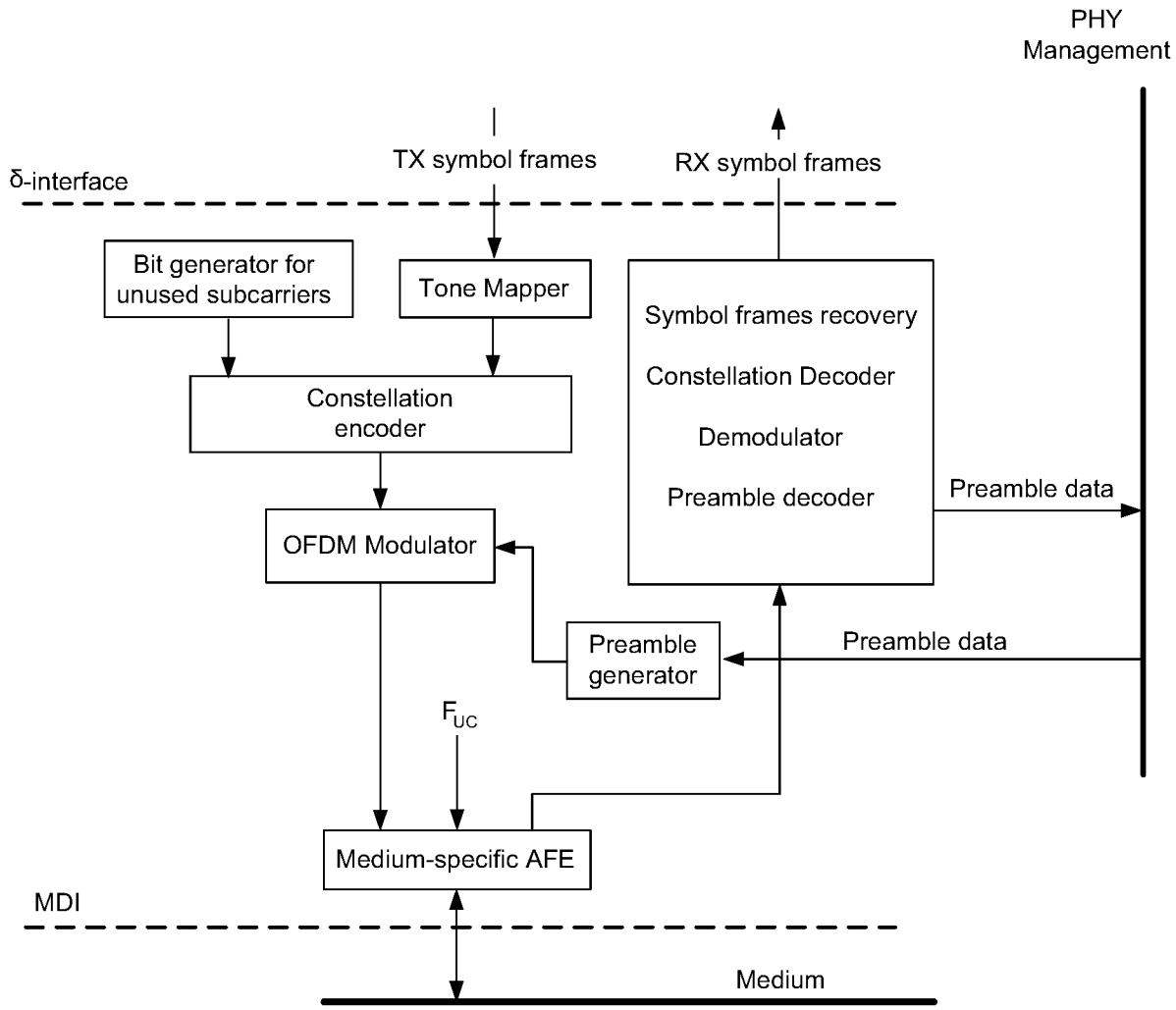

Figure 7-11/G.9960 – Functional model of the PMD

The OFDM modulator (§7.1.4.4) converts the stream of the N complex numbers at its input into the stream of N time-domain samples. After adding the Preamble, the transmit signal is up-shifted by the center frequency F_{US} or, for RF applications, by center frequency F_{UC} to fit the required spectrum of the transmit signal. Parameters of the Preamble (§7.1.4.5) are determined by the PHY management and depend on the type of the transmitted PHY frame.

Frames are output onto the medium with inter-frame gaps the details of which are for further study.

In the receive direction, the frames incoming from the medium are demodulated and decoded. The recovered symbol frames are transferred to the PMA via δ-interface. The preamble is processed and preamble data are passed to the PHY management entity.

7.1.4.1 Sub-carrier spacing and logical indexing

The sub-carrier spacing F_{SC} is the frequency spacing between any two adjacent sub-carriers. Valid values of sub-carrier spacing are presented in Table 7-28, with a tolerance of ±50 ppm.

The logical index is the index for loading data on sub-carriers. The logical index may be different from the input order to the IDFT used in §7.1.4.4.1. The order in which constellation points

associated with particular sub-carriers are input to the IDFT shall be in accordance with the following indexing rules.

The logical index of sub-carriers shall be from $i = 0$ to $i = N - 1$ using one of the following two rules:

Rule #1: The sub-carriers with all logical indices from $i = 0$ to $i = N - 1$ shall be centered at frequencies $f = F_{US} - (N/2 - i) \times F_{SC}$.

Rule #2: The sub-carriers with even logical indices from $i = 0$ to $i = N - 2$ shall be centered at frequencies $f = F_{UC} + F_{US} + (i/2) \times F_{SC}$ while those with odd logical indices from $i = 1$ to $i = N - 1$ shall be centered at frequencies $f = F_{UC} + F_{US} - ((i+1)/2) \times F_{SC}$.

Logical indexing rules shall be applied in accordance with the Domain Type and the bandplan, as specified in Table 7-30, Table 7-33, and Table 7-37.

Not all sub-carriers may always be used for data transmission; some of them have to be switched off in special circumstances. Others may be only used with reduced power. The latter functions are performed by tone masking and gain scaling (§7.1.5.1, 7.1.5.3).

NOTE – The particular sub-carriers used for data transmission between two particular nodes depend on channel characteristics, such as loop attenuation and noise, and on the specific spectrum-use requirements, such as notching of amateur radio bands; some sub-carriers may be subject for PSD reduction, e.g., at high and low frequencies to share the medium with other services.

NOTE – In case of a non-RF application, the value of F_{UC} is zero. For baseband applications (the lowest sub-carrier frequency is zero), the value of F_{US} should be: $F_{US} = F_{SC} \times N/2$.

7.1.4.2 Tone Mapper

The tone mapper determines the number of bits to be loaded on each sub-carrier and the value of gain on each sub-carrier. The ability of bit loading depends on the type of the sub-carrier.

7.1.4.2.1 Summary of sub-carrier types

For the purpose of tone mapping, the following types of sub-carriers are defined.

1. Masked sub-carriers (MSC) are those on which transmission is not allowed, i.e., the gain on this sub-carrier shall be set to zero. Two types of MSC are defined:

- Permanently masked sub-carriers (PMSC) – those that are never allowed for transmission. The list of PMSC, also called PMSC mask, depends on the media type and is defined by limited PSD mask, §7.2. Data bits are never mapped on PMSC.

- Regionally masked sub-carriers (RMSC) – those that are not allowed for data transmission in some regions, while may be allowed in other regions. The list of RMSC forms a RMSC mask, which depends on the type of media and on the region/application. The number of RMSC, #RMSC = #MSC - #PMSC.

2. Supported sub-carriers (SSC) are those on which transmission is allowed under restrictions of the relevant PSD mask. The number of SSC, #SSC = N – #MSC. The following types of SSC are defined:

- Active sub-carriers (ASC) – those that have loaded bits ($b \geq 1$) for data transmission. ASC are subject to constellation point mapping, constellation scaling and constellation scrambling as described in §7.1.4.3. Data bits shall be mapped on ASC as described in §7.1.4.2.2.

- Inactive sub-carriers (ISC) – those that don't have any data bits loaded (e.g., because SNR is low, or by any other reason). The number of ISC, #ISC = #SSC – #ASC. ISC can be used for measurement purposes or other auxiliary purposes. ISC are subject for transmit power shaping. The signals transmitted on ISC are defined in §7.1.4.2.6.

All sub-carriers with frequencies between the supported sub-carrier with the lowest frequency and the supported sub-carrier with the highest frequency are also called "in-band sub-carriers".

7.1.4.2.2 Bit Allocation Tables (BAT)

Tone mapping is defined by a Bit Allocation Table (BAT) that associates sub-carrier indexes with the number of bits to be loaded on the sub-carrier. The order of sub-carrier indexes in BAT shall be numerical, from the smallest index to the largest index. Bits of the TX symbol frame shall be loaded on the sub-carriers in the order of indexes in BAT, according to subcarrier indexing defined in §7.1.4.1.

The BATs used by the node in the particular PHY frame shall be indicated to the receiving node(s) in the TPN field of the PHY-frame header, as described in §7.1.2.3, using a BAT identifier (BAT_ID). Up to 32 BAT with BAT_ID values in the range from 0 to 31 can be defined. One or more BAT_ID can be assigned for each destination (per unicast or multicast DID). The assignment of BAT_ID shall be as described in Table 7-20.

Table 7-20/G.9960 – Assignment of BAT_ID

BAT_ID	Type of BAT	Reference
0	Pre-defined, Type 0	§7.1.4.2.2.1
1	Pre-defined, Type 1	
2	Pre-defined, Type 2	
3	Pre-defined, Type 3	
4-15	Reserved for pre-defined BATs	
16-31	Reserved for runtime BATs	§7.1.4.2.2.2

Every node shall support at least pre-defined BATs of Type 0 and Type 1. Support of other BATs is profile-dependent and shall be as described in Table 7-26.

7.1.4.2.2.1 Pre-defined BATs

The following pre-defined BATs are defined.

1. Pre-defined BAT Type 0: Uniform 2-bit loading on all sub-carriers except the PMSC set.
2. Pre-defined BAT Type 1: Uniform 1-bit loading on all sub-carriers except the PMSC set.
3. Pre-defined BAT Type 2: Uniform 2-bit loading on a particular selected ASC set.
4. Pre-defined BAT Type 3: Uniform 1-bit loading on a particular selected ASC set.

NOTE: Pre-defined BAT Type 0 and Type 1 may be used when channel characteristics are unknown (i.e., no knowledge is available on whether particular tones could be loaded bits or not).

NOTE: Pre-defined BATs that are implemented using a particular ASC set (e.g., Type 2) are always associated with a reference, such as a runtime BAT, which defines this ASC set. The coding is for further study.

7.1.4.2.2.2 Runtime BATs

A runtime BAT associates indices of SSCs with the number of bits to be loaded on each sub-carrier. The subset of indices in the BAT with the number of loaded bits b > 0 identifies the ASC. Runtime BAT can be defined by the receiving node (receiver-defined BAT) or selected by the transmitting node (transmitter-determined BAT) for a specific unicast or multicast channel. Runtime BATs shall be communicated from the node which generates the BAT to the peer (e.g., a node sourcing multicast transmission to several other nodes will communicate the BAT to all receiving nodes prior to sending data).

The number of bits loaded on any sub-carrier shall not exceed the maximum number of bits allowed (see §7.1.4.3). The number of bits shall also meet the bit loading capabilities of the communicating nodes, as advertised by them prior to communication.

7.1.4.2.3 Transmitter-determined and receiver-determined mapping

Two types of tone mapping are defined: transmitter-determined and receiver-determined. With transmitter-determined mapping, the BAT is defined by the transmitter and shall be either a pre-defined BAT or it shall be communicated to all destination nodes prior to transmission. With receiver-determined mapping, the BAT is defined by the receiver of the destination node and communicated back to the transmitter.

For unicast transmission, the node shall use either one of the pre-defined BATs (transmitter-determined) or a BAT defined by the receiver of the destination node for the PHY frame. For multicast transmission both pre-defined BATs (transmitter determined) and runtime BATs can be used. If a runtime BAT is used, it shall be defined by the node sourcing the multi-cast (transmitter-determined); this node shall generate the BAT and communicate it to all multi-cast destinations.

The BAT communication protocol is for further study.

A node shall support both transmitter-determined and receiver-determined types of mapping, with the minimum number of simultaneously supported BAT depends on the profile. The definition of profiles is for further study.

7.1.4.2.4 BAT with sub-carrier grouping

A node shall be capable to define any runtime BAT using sub-carrier grouping of G = 1 (no grouping), 2, 4, 8, and 16 sub-carriers with subsequent frequencies. The default value of G = 1. If grouping is used (G >1), all sub-carriers of the same group shall use the same bit loading. The first group shall include G sub-carriers in ascending order of subcarrier indexes defined in §7.1.4.1. If a group includes sub-carriers that are masked (e.g., MSC) or extends beyond the applicable sub-carrier set, the node shall apply the bit loading assigned for this group only to the applicable sub-carrier set.

The group index G shall be indicated when the BAT is communicated, details of which are for further study.

7.1.4.2.5 Special mappings

7.1.4.2.5.1 Tone mapping for PHY-frame header

The PHY-frame header shall use a uniform loading of 2 bits per sub-carrier on all sub-carriers except the PMSC set.

7.1.4.2.5.2 Tone mapping for RCM

Payload transmission in robust communication mode RCM shall use pre-defined BAT Type 0.

7.1.4.2.5.3 Tone mapping for probe frame

The payload of the Probe frame shall be modulated using a uniform loading of 1 bit per sub-carrier on all SSC set. For Probe frames, ISC = SSC.

7.1.4.2.6 Modulation of unloaded sub-carriers

Supported sub-carriers (SSC) that are not loaded with payload bits or that are partially loaded with payload bits shall be loaded with a pseudo-random sequence defined by the Linear Feedback Shift Register (LFSR) generator with the polynomial $p(x)=x^{23}+x^{18}+1$ shown in Figure 7-12. The LFSR generator shall be initialized to all ones (0x7FFFFF) at the beginning of the first payload OFDM Symbol. It shall be advanced by two bits for each sub-carrier (for both SSC and MSC).

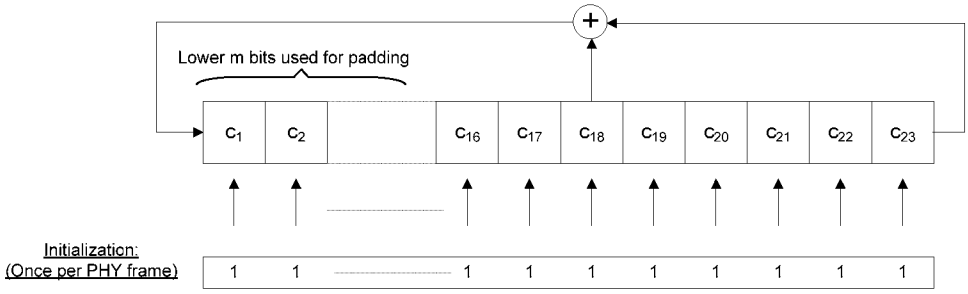

Figure 7-12/G.9960 – LFSR for modulation of unloaded and partially loaded sub-carriers

The modulation of sub-carriers that are not loaded with payload bits shall be as follows:

1) Starting at the beginning of the first payload OFDM symbol, each sub-carrier from the ISC set shall be modulated with the two bits which are the LSBs of the LFSR, c_1, and c_2 using 2-bits constellation mapping defined in §7.1.4.3.1.1 (c_1 is transmitted first). If a special channel-estimation symbol is used after the PHY-header, it shall be considered as a payload symbol for this purpose. All SSC of a channel-estimation symbol are ISC.
2) In every OFDM symbol of payload, if the number of bits in the symbol frame doesn't fill the entire symbol, the bits from the LFSR shall be used to fill the remainder of the symbol frame, by taking the sequential groups of *m* LSBs of the LFSR and mapping them onto the remaining sub-carriers so that LSB of LFSR is transmitted first and in the order defined by the current BAT, where *m* is the number of bits allocated for that sub-carrier by the BAT. For the first padded sub-carrier, if n bits of the m loaded bits are data bits, these n data bits shall be loaded as the LSBs of the group of bits mapped on the constellation point, and the *m-n* bits of the LFSR shall be used as the MSBs of the group of bits mapped on the constellation point starting from LSB of LFSR.

3) In the case of a Probe frame, starting at the beginning of the first payload OFDM symbol, each sub-carrier from the ISC set shall be modulated with the one bit, which is the LSB of the LFSR, c_1, using 1-bit constellation mapping defined in §7.1.4.3.1.2.

7.1.4.3 Constellation Encoder

7.1.4.3.1 Constellation mapping

Constellation mapping associates every group of bits loaded onto a sub-carrier, with the values of I (in-phase component) and Q (quadrature component) of a constellation diagram. Each incoming group of b bits $\{d_{b-1}, d_{b-2}, \ldots d_0\}$ shall be associated with a specific values of I and Q computed as described in this section.

Each group of bits $\{d_{b-1}, d_{b-2}, \ldots d_0\}$ shall be mapped onto the constellation mapper with the LSB bit, d_0, first.

7.1.4.3.1.1 Constellations for even number of bits

If the number of bits, b, loaded onto the sub-carrier is even (2, 4, 6, 8, 10, 12), square-shaped constellations with mappings described in this section shall be used. Support of all the specified even order constellations (2, 4, 6, 8, 10 and 12) shall be mandatory at both the transmitter and the receiver. With square-shaped constellations 2^b constellation points are set as a square, and 2^{b-2} points reside in each quadrant with odd values (positive or negative) of I and Q.

Constellation and mapping for $b = 2$ shall be as presented in Figure 7-13 and described in Table 7-21.

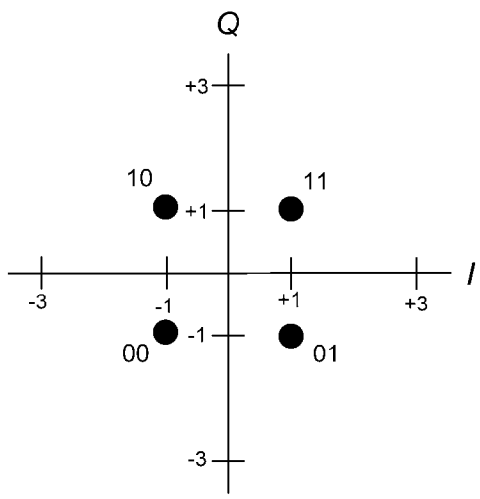

Figure 7-13/G.9960 - Constellation and mapping for $b = 2$

Table 7-21/G.9960 - Mapping for $b = 2$ (QPSK)

Bit d_0	I		Bit d_1	Q
0	-1		0	-1
1	1		1	1

Constellation mapping for $b = 4$ shall be as described in Table 7-22. The first quadrant of the mapping is presented in Figure 7-14.

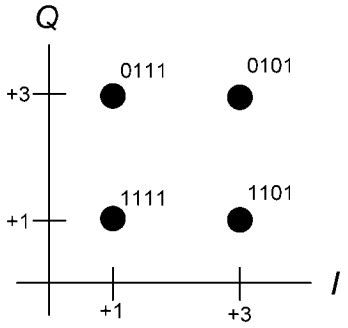

Figure 7-14/G.9960 – Constellation and mapping for $b = 4$ (first quadrant)

Table 7-22/G.9960 - Mapping for $b = 4$

Bits $[d_1 d_0]$	I		Bit $[d_3 d_2]$	Q
00	-3		00	-3
10	-1		10	-1
11	1		11	1
01	3		01	3

Constellation mappings for even values of $b \geq 4$ shall be derived by the following steps.

1. Divide the incoming group of b bits into two equal sub-groups, so that $b/2$ LSBs form the first sub-group (I-group) and $b/2$ MSBs form the second sub-group (Q-group); both sub-groups are incoming LSB (which are d_0 and $d_{b/2}$, respectively) first.

2. Compute values of I and Q for the incoming group $\{d_{b-1}, d_{b-2}, \ldots d_0\}$ as:

$I = sgn_I \times val_I$

$Q = sgn_Q \times val_Q$

The values of *sgn* and *val* shall be computed as presented in Table 7-23 using bits of I-group to compute I and bits of Q-group to compute Q.

Table 7-23/G.9960 – Computation rule for *sgn* and *val*

I - component	Q - component
- compute $sgn_I = 2\times d_0 - 1$ - compute $val_I = \lvert I_{b-2} - 2^{b/2-1}\rvert$	- compute $sgn_Q = 2\times d_{b/2} - 1$ - compute $val_Q = \lvert Q_{b-2} - 2^{b/2-1}\rvert$
NOTES: 1. I_{b-2} and Q_{b-2} are the values of I and Q computed for the incoming (b-2)-bit group $\{d_{b-1}, d_{b-2}, \ldots d_{b/2+1}, d_{b/2-1}, \ldots d_1\}$, i.e., with removed d_0 and $d_{b/2}$. 2. The values of I and Q for 2-bit groups shall be as presented in Table 7-21 3. |X| is the absolute value of X	

7.1.4.3.1.2 Constellations for odd number of bits

If the number of bits, b, loaded onto the sub-carrier is odd (1, 3, 5, 7, 9, 11), constellations with mappings described in this section shall be used. The support of all the specified odd order constellations (1, 3, 5, 7, 9 and 11) shall be mandatory at the transmitter. The support of all the specified odd order constellations with b ≥ 5, shall be optional at the receiver.

For multi-cast transmission, odd constellations with b ≥ 5 shall not be used.

Constellation and mapping for b = 1 shall be as presented in Figure 7-15.

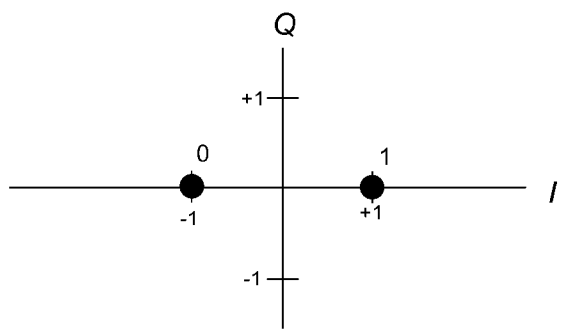

Figure 7-15/G.9960 - Constellation shape and mapping for *b* = 1

Constellation and mapping for b = 3 shall be as presented in Figure 7-16.

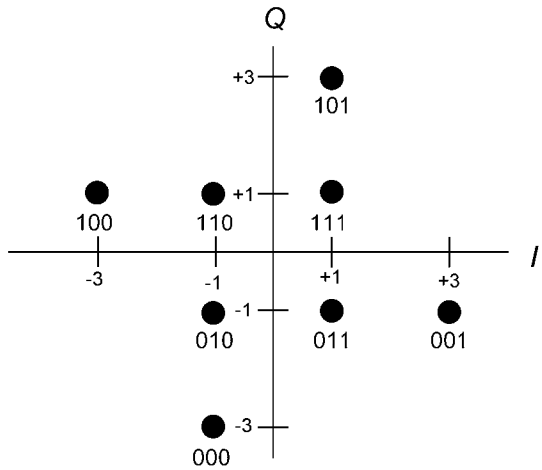

Figure 7-16/G.9960 - Constellation and mapping for *b* = 3

For $b > 3$ cross-shaped constellations shall be used. First, 2^b constellation points shall be set as a rectangle, with $M_I = 2^{B1}$ columns (M_I points on the *I*-axis) and $M_Q = 2^{B2}$ rows (M_Q points on the *Q*-axis), where B1 = *ceiling*(*b*/2) and B2 = *floor*(*b*/2). The mapping of these points shall be computed using the following steps.

1. Divide the incoming group of bits into two sub-groups, so that B1 LSBs form the first sub-group (*I*-group) and B2 MSBs form the second sub-group (*Q*-group); both sub-groups are incoming LSB (which are d_0 and d_{B2+1}, respectively) first.

2. Compute values of *I* and *Q* of a rectangular constellation for the incoming group $\{d_{b-1}, d_{b-2}, \ldots d_0\}$ as:

$I = sgn_I \times val_I$

$Q = sgn_Q \times val_Q$

The values of *sgn* and *val* shall be computed as presented in Table 7-24 using bits of *I*-group to compute *I* and bits of *Q*-group to compute *Q*.

Table 7-24/G.9960 – Computation rule for *sgn* and *val*

I - component	*Q* - component
- compute $sgn_I = 2\times d_0 - 1$ - compute $val_I = \lvert I_{2\times B1}\rvert$	- compute $sgn_Q = 2\times d_{B1} - 1$ - compute $val_Q = \lvert Q_{2\times B2}\rvert$
NOTES: 1. $I_{2\times B1}$ is the value of *I* for (2×B1)-bit group $\{0\ d_{b-1}, d_{b-2}, \ldots d_0\}$ computed as defirned in Table 7-23. 2. $Q_{2\times B2}$ is the value of *Q* for (2×B2)-bit group $\{d_{b-1}, d_{b-2}, \ldots d_1\}$ computed as defirned in Table 7-23. 3. |X| is the absolute value of X	

3. Transform $s = (M_I - M_Q)/4$ columns of constellation points in each quadrant having highest absolute values of I (positive or negative) into rows of Q by changing their $\{I, Q\}$ coordinates to $\{I', Q'\}$ in the following way:

- $|Q'| = |I| - 2s$, and $\text{sign}(Q') = \text{sign}(I)$;
- $|I'| = M_Q - |Q|$, and $\text{sign}(I') = \text{sign}(Q)$.

The described transformation of $\{I, Q\}$ coordinates for $b = 7$ is presented in Figure 7-17 with B1 = 4 and B2 = 3 (the MSB and LSB in Figure 7-17 are separated by "/").

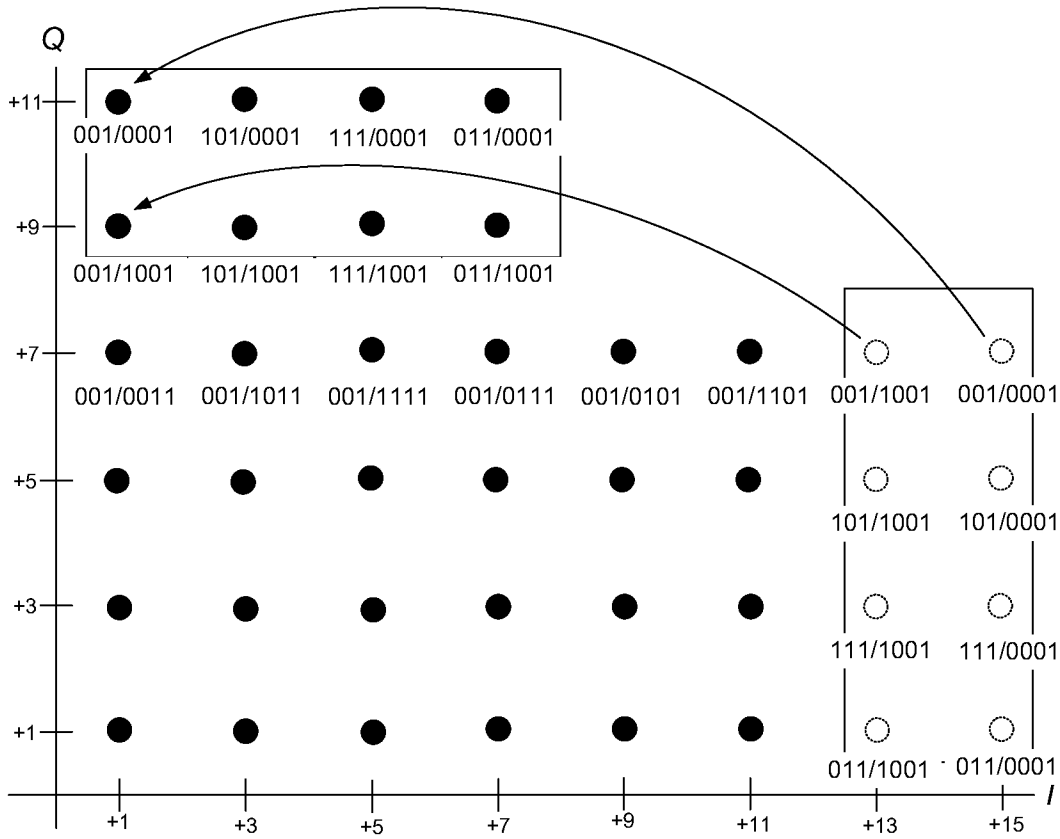

Figure 7-17/G.9960 - Transformation of rectangular constellation into cross-shaped constellation for *b* = 7 (first quadrant)

7.1.4.3.2 Constellation point scaling

Each constellation point (I, Q), corresponding to the complex value $I + jQ$ at the output of the constellation mapper, shall be scaled by the power-normalization factor $\chi(b)$, the frequency-domain spectrum shaping coefficient tss, and the gain adjuster g:

$$Z = \chi(b) \times tss \times g \times (I + jQ).$$

7.1.4.3.2.1 Power normalization factor

The values (*I, Q*) for each constellation point of each sub-carrier shall be scaled such that all constellations, regardless of their size, have the same average power. The required scaling, $\chi(b)$, for a sub-carrier with *b*-bit loading depends only on the value of *b* and shall be set as presented in Table 7-25.

Table 7-25/G.9960 – Power normalization factor

Number of bits loaded (*b*)	Scaling factor (χ) (linear scale)
1	1
2	$1/\sqrt{2}$
3	$1/\sqrt{6}$
4	$1/\sqrt{10}$
5	$1/\sqrt{20}$
6	$1/\sqrt{42}$
7	$1/\sqrt{82}$
8	$1/\sqrt{170}$
9	$1/\sqrt{330}$
10	$1/\sqrt{682}$
11	$1/\sqrt{1322}$
12	$1/\sqrt{2730}$

7.1.4.3.2.2 Transmit spectrum shaping

Frequency-domain spectrum shaping of the transmit signal is achieved by a scaling factor *tss* defined for each sub-carrier. The *tss* values are set by the transmitter and shall be in the range between 0 and 1 (linear) in steps of 1/1024. The *tss* values shall be set such that the highest value across all sub-carriers is 1. Smaller values of *tss* provide attenuation and the value *tss* = 0 corresponds to no power transmitted on the particular sub-carrier. If no spectrum shaping is applied, the *tss* values shall be equal to 1 for all sub-carriers. The values of tss_i are relevant only for sub-carriers that are actually transmitted (not masked), and shall be ignored for masked sub-carriers (see §7.1.5.3).

The communication protocol for *tss* is for further study.

7.1.4.3.2.3 Gain adjustment

The gain adjuster *g* is intended for fine gain adjustment of the power transmitted at a particular sub-carrier, which may be used to equalize the SNR margin over all sub-carriers.

The value of gain adjuster shall be set to 1. Other values are left for further study.

7.1.4.3.3 Constellation Scrambler

The phase of constellation points generated by the Constellation Mapper shall be shifted in accordance with the pseudo-random sequence generated by a Linear Feedback Shift Register (LFSR) generator, as shown in Figure 7-18.

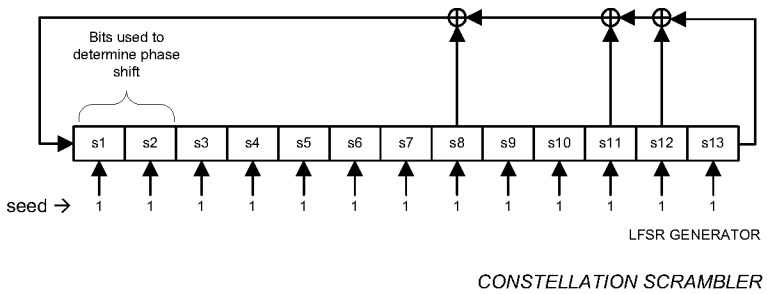

Figure 7-18/G.9960 – Constellation scrambler

The LFSR generator shall implement the polynomial $g(x) = x^{13} + x^{12} + x^{11} + x^{8} + 1$ and shall be advanced by 2 bits for each sub-carrier. The two LSB's of the register shall be taken to determine the phase shift as shown in Table 7-26. The shift of the LFSR for subcarrier index k will be 2k.

Table 7-26/G.9960 – Constellation phase shift versus LSFR output

LFSR OUTPUT		PHASE SHIFT (rad)
S2	S1	
0	0	0
0	1	π/2
1	0	π
1	1	3π/2

The LFSR generator shall be initialized with the seed 0x1FFF for each OFDM symbol. The constellation scrambling shall be applied to the PHY-frame header and all payload symbols.

7.1.4.4 OFDM modulator

The OFDM modulator consists of the following major parts: IDFT, cyclic extension, windowing, overlap and add, and frequency up-shift. The incoming signal to the modulator at the *l*-th OFDM symbol in the present frame for a single sub-carrier, with index *i,* is the real and imaginary parts of the value $Z_{i,l}$ generated by the Constellation encoder as described in §7.1.4.3.2 (for symbols of the header and the payload) or by Preamble Generator as described in §7.1.4.5.2.1 (for symbols of the preamble). Time-domain samples generated by the IDFT, after adding the cyclic prefix and windowing, are frequency up-shifted to the center frequency F_{US}. The functional diagram of

OFDM modulator is presented in Figure 7-19. RF up-converter facilitates G.9960 operation in RF frequency range.

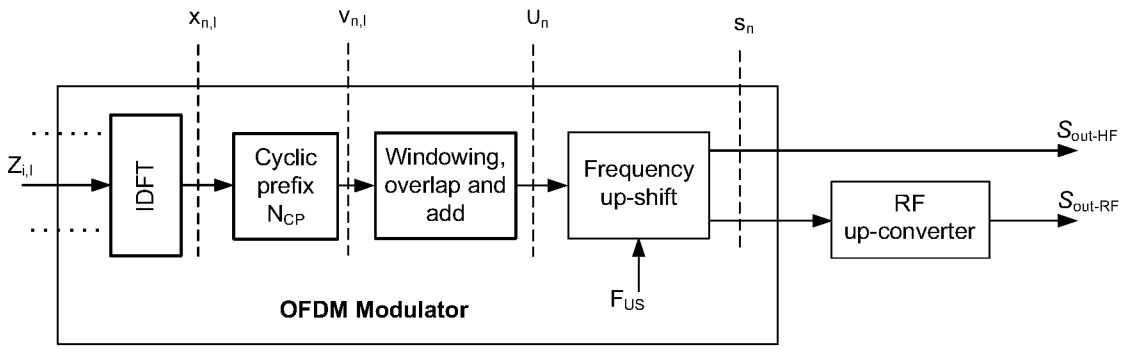

Figure 7-19/G.9960 – Functional model of the OFDM modulator

The presented functional diagram and other figures presented in this section do not imply any specific implementation. All aspects of signal processing used in the modulator shall comply with equations and textual descriptions.

7.1.4.4.1 IDFT

The IDFT converts the streams of the N complex numbers $Z_{i,l}$ at its inputs into the stream of N complex time-domain samples $x_{n,l}$. The input numbers represent the N mapped blocks of data, where i-th block of data represents the relative complex value $Z_{i,l} = \mathrm{Re}(Z_{i,l}) + j\mathrm{Im}(Z_{i,l})$ of the i-th modulated sub-carrier of the OFDM signal, where $i = 0, 1, \ldots N\text{-}1$ is the sub-carrier index and l is the sequential number of the OFDM symbol within the current frame, excluding the preamble. The conversion shall be performed in accordance with the equation:

$$x_{n,l} = \sum_{i=0}^{N-1} \exp\left(j \cdot 2\pi \cdot i \frac{n}{N} \right) \cdot Z_{i,l} \qquad \text{for } n = 0 \text{ to } N-1, \quad l = 0 \text{ to } M_F - 1 .$$

where M_F denotes the total number of OFDM symbols in the current frame and the value of N represents the maximum number of possibly modulated sub-carriers in the OFDM spectrum and shall be a power of 2: $N = 2^k$, where k shall be an integer. The value of $Z_{i,l}$ for all masked sub-carriers shall be set to 0. If some non-masked sub-carriers with indexes $i < N$ are not modulated (not in use), the corresponding values of $Z_{i,l}$ shall be generated as described in §7.1.4.2.6

7.1.4.4.2 Cyclic extension and OFDM symbol

The cyclic extension provides guard interval between data-carrying samples of adjacent OFDM symbols. This guard interval is necessary to protect the data-carrying samples from the inter-symbol interference (ISI) caused by the previous symbol.

In OFDM guard interval of the l-th OFDM symbol in the frame shall be implemented by pre-pending the last $N_{CP}(l)$ samples of the IDFT (called cyclic prefix) to its output N samples, as presented in Figure 7-20. The order of samples in the symbol shall be as follows:

- The first sample of the symbol is the IDFT output sample N-$N_{CP}(l)$;
- The last sample of $N_{CP}(l)$ is the IDFT output sample N-1; next sample is the IDFT output sample 0.

The l-th OFDM symbol consists of N IDFT samples and $N_{CP}(l)$ cyclic extension, samples, in total:

$$N_W(l) = N + N_{CP}(l) \text{ [samples].}$$

After cyclic extension as described above, time domain samples at the reference point $\upsilon_{n,1}$ in Figure 7.19 shall comply with the following equations:

$$\upsilon_{n,l} = x_{n-N_{CP}(l),l} = \sum_{i=0}^{N-1} Z_{i,l} \times \exp\left(j \cdot 2\pi \cdot i \frac{n - N_{CP}(l)}{N} \right) \cdot \quad \text{for } n = 0 \text{ to } N_W(l) - 1 = N + N_{CP}(l) - 1$$

The number of IDFT samples, N, and the number of windowed samples, β, shall be the same for all symbols of the same frame. The value of $N_{CP}(l)$ (and the duration of the symbol $N_w(l)$, accordingly) may change during the course of the frame, as following:

- All symbols of the header shall have the value of $N_{GI\text{-}HD}+\beta$ defined in §7.1.4.6;
- The first two symbols of the payload shall have the default value $N_{GI\text{-}DF}+\beta$, defined in §7.1.4.6. If a special channel-estimation symbol is used after the PHY-header, it shall be considered as a payload symbol for this purpose;
- All the rest of the payload symbols shall have the same value of N_{GI} selected from the valid values defined in §7.1.4.6 and indicated in the header, as described in §7.1.2.1.

7.1.4.4.3 Symbol Timing

The PHY frame consists of a preamble followed by an integer number, M_F, of symbols. The first symbol following the preamble (the first symbol of the PHY-header) shall have symbol count 0, and the last symbol of the frame shall have symbol count M_F-1. The time position of each symbol in the frame is defined by sample count. The first sample of the symbol with symbol count 0 shall have sample count $M(0)=N_{pr}-\beta$, where N_{pr} is the number of samples in the preamble. The count of the first sample of the l-th symbol (l = 1, 2, … M_F-1) in the frame shall be:

$$M(l) = N_{pr} - \beta + \sum_{k=0}^{l-1} N_S(k),$$

where $N_S(k) = N + N_{CP}(k) - \beta$ and $N_S(k)$ may be different for symbols of the header and payload, as described in §7.1.4.6.

7.1.4.4.4 Windowing, overlap and add

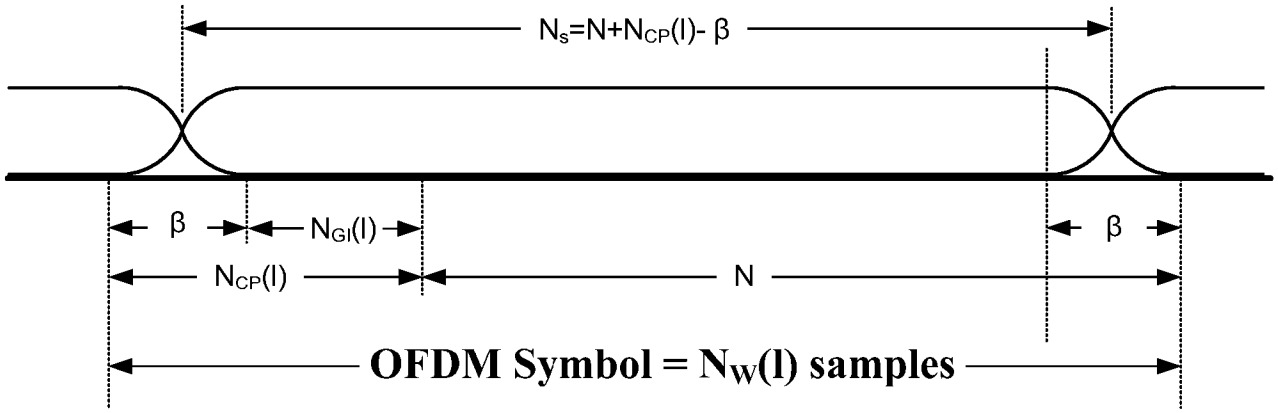

Figure 7-20/G.9960 – Structure of an OFDM symbol with cyclic extension and overlapped windowing

The first β samples of the cyclic prefix and last β samples of the IDFT output shall be used for shaping the envelope of the transmitted signal (windowing). The window function facilitates PSD shaping: it allows sharp PSD roll-offs used to create deep spectral notches and reduction of the out-of-band PSD. The number of windowed samples, β, shall be the same for all of the payload symbols of the same frame, as well as the PHY-header and preamble.

To reduce the modulation overhead, the windowed samples of adjacent symbols shall overlap, as presented in Figure 7-20. The value of $N_{CP}(l) - \beta = N_{GI}(l)$ forms the guard interval. The duration of the *l-th* OFDM symbol is thus $N_S(l) = N + N_{CP}(l) - \beta$.

After windowing, overlap and add, time domain samples at the reference point u_n in Figure 7.19 shall comply with the following equations:

$$u_n = u_n^{(pr)} + \sum_{l=0}^{M_F-1} w(n - M(l), l) \times \upsilon_{n-M(l),l} \qquad \text{for } n = 0 \text{ to } M(M_F - 1) + N_W(M_F - 1) - 1,$$

where $u_n^{(pr)}$ is the n'th sample of the preamble, as defined in §7.1.4.5 (Note: the signal $u_n^{(pr)}$ already includes windowing as necessary), $w(n,l)$ is the windowing function defined on $N_W(l)$ samples of the OFDM symbol in the following way:

$$w(n,l) = \begin{cases} w_\beta(n) & 0 \le n < \beta \\ 1 & \beta \le n < N_W(l) - \beta \\ w_\beta(N_W(l) - 1 - n) & N_W(l) - \beta \le n < N_W(l) \\ 0 & \text{otherwise} \end{cases},$$

where $w_\beta(n)$ is the function describing the roll-off section of the window. The roll-off function $w_\beta(n)$ shall be vendor discretionary.

However, $w_\beta(n)$ shall comply with the following rules:

- $w_\beta(n) + w_\beta(\beta - n) = 1$ for $0 \le n < \beta$.
- $0 \le w_\beta(n) \le 1$.

The symbol rate f_{OFDM} (number of symbols per second) and symbol period T_{OFDM} for the given value of N_{CP} and β shall be computed, respectively:

$$f_{OFDM} = \frac{N \times F_{SC}}{N + N_{CP} - \beta},$$

and $T_{OFDM} = 1/f_{OFDM}$.

7.1.4.4.5 Frequency up-shift

The frequency up-shift offsets the spectrum of the transmit signal setting it around the frequency F_{US}. The value of F_{US} shall be a multiple of the sub-carrier frequency F_{SC}:

$F_{US} = m*F_{SC}$, where m is an integer and $N/2 \leq$ m.

The valid values of m are specified in §7.1.4.6.

The real and imaginary components of the signal after frequency up-shift (reference point s_n in Figure 7-19) shall be as follows:

$$s_n = u_{n/p} \times \exp\left(j\frac{2\pi mn}{Np}\right) = \mathrm{Re}(s_n) + j\,\mathrm{Im}(s_n) \qquad \text{for } n = 0 \text{ to } \left[M(M_F - 1) + N_W(M_F - 1)\right] \times p - 1;$$

$$\mathrm{Re}(s_n) = \mathrm{Re}(u_{n/p})\cos\left(\frac{2\pi mn}{Np}\right) - \mathrm{Im}(u_{n/p})\sin\left(\frac{2\pi mn}{Np}\right)$$

$$\mathrm{Im}(s_n) = \mathrm{Re}(u_{n/p})\sin\left(\frac{2\pi mn}{Np}\right) + \mathrm{Im}(u_{n/p})\cos\left(\frac{2\pi mn}{Np}\right)$$

where $u_{n/p}$ is u_n after interpolation with factor p. The interpolation factor p is vendor discretionary, and shall be equal to or higher than 2.

NOTE: The minimum value of p sufficient to avoid distortions depends on the ratio between the center frequency F_{US} and the bandwidth of the transmit signal BW = $N*F_{SC}$. It is assumed that an appropriate low-pass filter is included to reduce imaging.

NOTE: The phase of the up-shift should be initialized to zero at the first sample of the Preamble and be advanced by $\frac{2\pi m}{Np}$ per each sample (after interpolation).

NOTE: For certain values of N_{GI}, β, and m, the phase of the up-shifter at the first sample of some symbols may not be zero. In these cases a $2N$-point real-valued IFFT implementation has to compensate by adjusting phases appropriately in order to match the modulation described here.

7.1.4.4.6 Output signal

For all applications which don't use RF up-converter (further referred to as HF-applications), the output signal of the modulator shall be the real component of s_n:

$S_{out\text{-}HF} = \mathrm{Re}(s_n)$.

For RF applications, the RF up-converter shall produce the following output signal:

$$S_{out-RF}(t) = \mathrm{Re}\left[s(t) \times \exp(j2\pi F_{UC}t)\right] = \mathrm{Re}\left[s(t)\right] \times \cos(2\pi F_{UC}t) - \mathrm{Im}\left[s(t)\right] \times \sin(2\pi F_{UC}t).$$

where F_{UC} is the frequency shift introduced by the RF modulator. The range of F_{UC} and its valid values are specified in §7.1.4.6.

After RF up-conversion, the center frequency around which the spectrum of the transmit OFDM signal will be placed is $F_{UC} + F_{US}$.

7.1.4.5 Preamble

7.1.4.5.1 General preamble structure

Preamble is prepended to every PHY frame defined in §7.1.2.1. It is intended to assist the receiver detecting, synchronizing to the packet boundaries, and acquiring the physical layer parameters such as channel estimation and OFDM symbol alignment. Preamble shall meet the same transmit PSD mask (i.e., notches, shapes) as the header and the payload symbols.

Table 7-27 presents the general structure of G.9960 preamble. Each section i comprises N_i repetitions of an OFDM symbol (S_i) employing sub-carrier spacing $k_i \times F_{SC}$, where F_{SC} denotes the sub-carrier spacing of the payload. A zero value for N_i means that section i is not included in the preamble. The values of k_i shall be selected from the set 1, 2, 4 or 8. The preamble sub-carriers of section i shall be one in every k_i sub-carriers with respect to the sub-carriers used for the payload OFDM symbol starting from sub-carrier zero. Each preamble section shall be windowed as necessary in order to comply with the PSD mask. This is illustrated in Figure 7-21.

Table 7-27/G.9960 – General structure of preamble

	1st Section	2nd Section	3rd Section	Header	4th Section
Number of Symbols (N_i) (Note 1)	N_1	N_2	N_3	Note 5	N_4
Sub-carrier spacing ($k_i \times F_{SC}$)	k_1	$k_2 = k_1$ (Note 2)	k_3		$k_4 = 1$ (Note 3)
OFDM Symbol (S_i)	S_1	$S_2 = -S_1$ (Note 4)	S_3		S_4

Note 1: N_i does not include windowing.
Note 2: The sub-carrier spacing of the 2nd section shall be equal to the sub-carrier spacing of the 1st section.
Note 3: The sub-carrier spacing of the 4th section shall be the same as sub-carrier spacing of PHY-frame header and payload.
Note 4: The OFDM symbol of the 2nd section shall be an inverted time-domain waveform of the 1st section.
Note 5: Header contains a field (PHI) that indicates $N_4 = 1$ or $N_4 = 0$

Figure 7-21 shows the G.9960 preamble waveform.

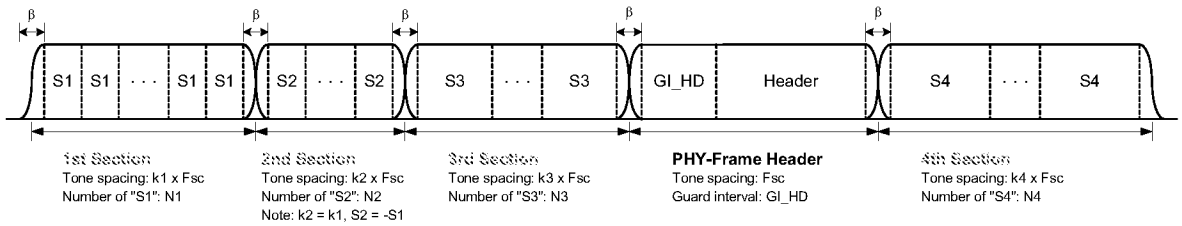

Figure 7-21/G.9960 − Preamble waveform

The number of repetitions of OFDM symbol S_i (N_i) in each of the preamble sections may be a non-integer number to incorporate optional guard interval between sections provided that a fraction of N_i conforms the requirement on the guard interval specified in Table 7-28. The specific preamble types and construction methods are defined in §7.2.

7.1.4.5.2 Preamble generation

This section contains the description of preamble generation method, which is not medium dependent. The preamble generation method specific to the type of medium is described under §7.2.

7.1.4.5.2.1 Frequency-domain symbol generation

The sub-carriers of the i section of the preamble shall be 1 every k_i sub-carriers with respect to the indices of the sub-carriers used for the payload OFDM symbol starting from sub-carrier zero. Preamble generator shall output complex values Z_i for each sub-carrier $i = 0, 1, 2, \ldots$ to be modulated onto symbols of the preamble in accordance with the relevant sub-carrier mask.

7.1.4.5.2.1.1 Modulation of the preamble symbol

The non-masked preamble's sub-carriers shall be modulated using a default reference BPSK sequence, of all 1's. Other reference sequences are for further study. The reference sequence shall be subsequently rotated as specified in §7.1.4.3.3 (Constellation scrambler).

The LFSR generator shall be initialized at the beginning of each one of the used preamble sections to a seed that is preamble section and medium dependent as defined in §7.2.

For non-masked preamble's sub-carrier i, Zi shall be generated by rotating Pi using the two bits that are the LSBs of the LFSR, s1, and s2, as defined in Table 7-26.

The LFSR shall be advanced by 2 bits for each preamble's sub-carrier (either masked or not).

7.1.4.5.2.2 Time-domain symbol generation

The Zi values shall be modulated onto OFDM symbols as described in §7.1.4.4.1.

The output time domain symbol shall be repeated Ni times where Ni denotes the number of replicas within section i. If either N_1 or N_3 are non-integer numbers, the fraction of the symbol replica shall be at the beginning of the section. If N_2 is a non-integer number, the fraction of the symbols replica shall be at the end of the section.

The first, second and third sections of the preamble shall be windowed, overlapped and added as described below:

1. First section:
    a. The first short symbol of the first section is cyclically extended by prepending β/2 samples

b. The last short symbol of the first section is cyclically extended by appending β/2 samples
c. The first and last β samples of the extended first section are windowed with a window function $w_\beta(n)$ and $w_\beta(\beta-n-1)$ respectively.

2. Second section:
   a. The first short symbol of the second section is cyclically extended by prepending β/2 samples
   b. The last short symbol of the second section is cyclically extended by appending β/2 samples
   c. The first and last β samples of the extended second section are windowed with a window function $w_\beta(n)$ and $w_\beta(\beta-n-1)$ respectively.
3. Third section:
   a. The beginning of the third section is cyclically extended by prepending β samples.
   b. The first and last β samples of the extended third section are windowed with a window function $w_\beta(n)$ and $w_\beta(\beta-n-1)$ respectively.
4. Overlap and add:
   a. The β windowed samples at the end of the first section and at the beginning of the second section are overlapped and added.
   b. The β windowed samples at the end of the second section and at the beginning of the third section are overlapped and added.
   c. The β windowed samples at the end of the third section are overlapped and added with the β windowed samples at the beginning of the PHY-frame header as described in §7.1.4.4.4

$w_\beta(n)$ shall comply with the rules specified in §7.1.4.4.4
This is illustrated in Figure 7-22.

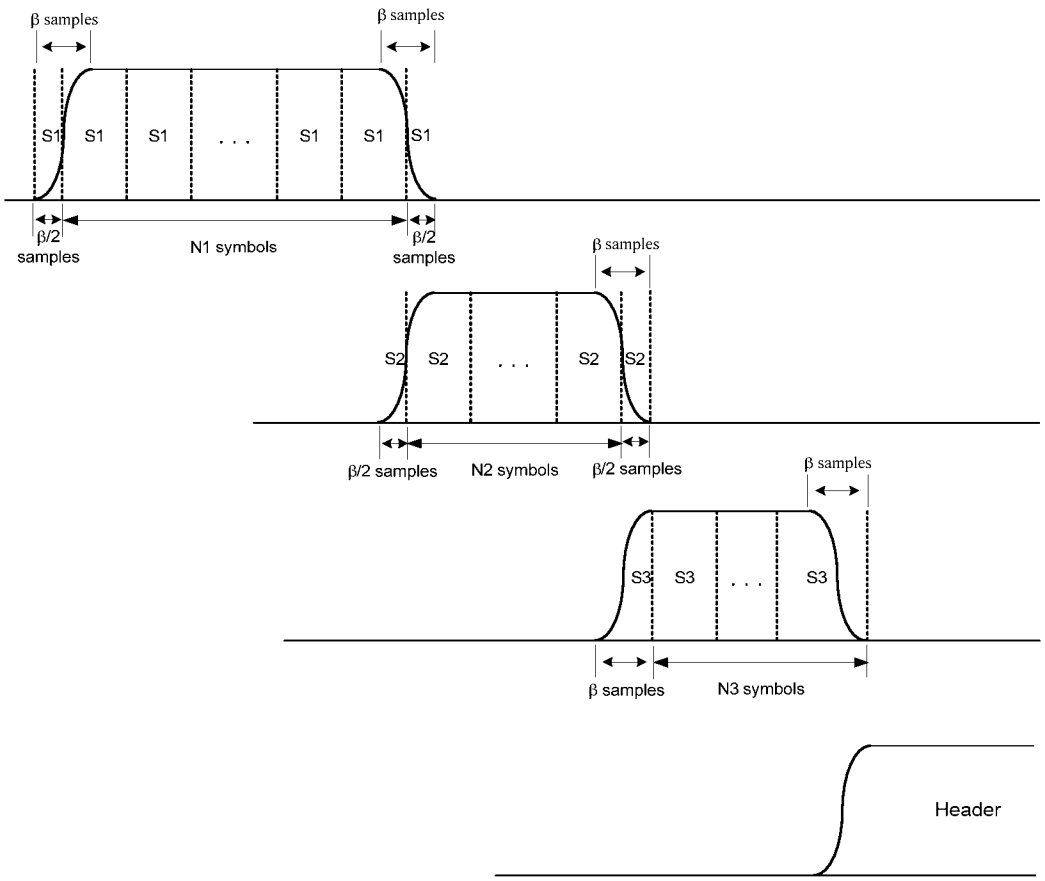

Figure 7-22/G.9960 – Preamble time domain generation

The number of samples in the preamble shall be:

$$N_{pr} = \beta + N_1 \frac{N}{k_1} + N_2 \frac{N}{k_2} + N_3 \frac{N}{k_3}$$

Other approaches for the transition region between the first and second sections of the preamble that meet the EVM and PSD requirements are allowed.

EVM requirements for the preamble are for further study.

7.1.4.6 PMD control parameters

Table 7-28 summarizes valid values of control parameters of an OFDM modulator described in the sections above. This list is a superset of parameters used over different media; a list of valid values of modulation parameters and their valid combinations for particular media is presented is §7.2.

Table 7-28/G.9960 – Valid OFDM control parameters

Notation	Parameter	Valid values or range	Note
N	Number of sub-carriers	256, 512, 1024, 2048, 4096	
F_{SC}	Sub-carrier spacing [kHz]	$24.4140625 \times k$, $k = 1, 2, 4, 8, 16, 32, 64$	
N_{GI}	Guard interval [samples]	$k \times N/32$, $k = 1, 2, 3, \ldots 8$	
$N_{\text{GI-HD}}$	Guard interval of the header	$N/4$	
$N_{\text{GI-DF}}$	Default guard interval of the payload	$N/4$	$N_{GI\text{-}DF} \geq N_{GI}$
β	Window size [samples]	Any integer between 0 and $N/4$	Range 0-$N/4$
F_{US}	Up-shift frequency, [kHz]	$m \times F_{\text{SC}}$, $m \geq N/2$	m is an integer; valid values of m are specified in §7.2
F_{UC}	Center frequency, [kHz]	$F_{\text{UC}} = l \times F_{\text{G}}$ where valid values for l are a subset of the range of integers between 13 and 99 $F_{\text{G}} = 25$ MHz	RF applications only Valid values of l are specified in §7.2.3
NOTE – Guard interval and Window size are expressed in samples at Nyquist rate.			

Secondary parameters of the OFDM modulator allow for performance estimation and are presented in Table 7-29.

Table 7-29/G.9960 – Secondary parameters of the modulator

Notation	Parameter	Note
BW	Total bandwidth [Hz]	$BW = N \times F_{SC}$
N_W	Total number of samples in an OFDM symbol	$N_W = N + N_{CP}$
f_{OFDM}	Symbol rate [symbols/s]	$f_{OFDM} = \dfrac{N \times F_{SC}}{N + N_{CP} - \beta}$
T_{OFDM}	Symbol period [s]	$T_{OFDM} = 1/f_{OFDM}$
N_{GI}	Guard interval	$N_{\text{GI}} = N_{CP} - \beta$

7.1.4.7 Symbol boost

Symbols of preamble and header can be sent with higher power (boosted) relative to the symbols of the payload. The boosting shall be achieved by increasing the power of each active sub-carrier in the boosted symbol by the same value in dB. Details of symbol boost are for further study.

7.1.5 Transmit PSD Mask

Transmit PSD mask is a superposition of a Sub-carrier Mask (SM), a PSD Shaping Mask (PSM), and a PSD ceiling (PSDC) defined in this section, and the Limit PSD Mask (LPM) defined for each particular medium. The PSD of the transmit signal at any frequency shall never exceed the Transmit PSD Mask.

The LPM (see §7.2.1.3, §7.2.2.3 and §7.2.3.3) specifies the absolute limit of the transmit PSD, intended for deployments with no special conditions. The SM, PSDC, and PSM provide further reduction and shaping of the transmit PSD using three mechanisms: sub-carrier masking (notching), PSD ceiling (limit on PSD level), and PSD shaping.

G.9960 transceivers shall support sub-carrier masking, notching of International Amateur radio bands, and PSD ceiling. Support of PSD shaping is optional.

7.1.5.1 Sub-carrier masking (notching)

This type of shaping shall be used to eliminate transmission on one or more sub-carriers. Sub-carrier masking is defined by a Sub-carrier Mask (SM). Transmit power of sub-carriers specified in SM shall be set to zero. SM shall override all other instructions related to the transmit power of the sub-carrier.

SM is defined as a number of masked frequency bands. Each band is specified by a start sub-carrier index (x_L) and a stop sub-carrier index (x_H), as $\{x_L, x_H\}$. An SM including S bands can be represented in the following format:

$$\mathrm{SM}(S) = [\{x_{L1}, x_{H1}\}, \{x_{L2}, x_{H2}\}, \ldots \{x_{LS}, x_{HS}\}].$$

All sub-carriers within the band, i.e., with indices equal or higher than x_L and lower than or equal to x_H, shall be switched off (transmitted with zero power).

International Amateur radio bands (see Annex D) are not a part of SM. In case Amateur radio bands are used for transmission, the node shall be capable to turn off one or more of Amateur radio bands using SM, by configuring one or more of SM bands coinciding with the Amateur radio bands.

7.1.5.2 PSD ceiling

PSD ceiling (PSDC) specifies the PSD level that is used to impose a limit (i.e., a ceiling function) on the transmit PSD mask. PSDC is independent of frequency and indicated by a single value in dBm/Hz. The valid range of PSDC values is from –50 dBm/Hz to –100 dBm/Hz with steps of 2 dB.

PSDC shall be supported by all G.9960 transceivers.

7.1.5.3 PSD shaping

PSD shaping allows transmit PSD reduction of PSD in some parts of the spectrum, mainly for spectrum compatibility and coexistence with other HN technologies. PSD shaping is specified by a PSM.

PSM is defined on the frequency range between the lowest sub-carrier x_1 and the highest sub-carrier x_H allowed for transmission, and consists of one or more frequency segments. The boundaries of the segments are defined by set breakpoints. Inside of each segment, PSD may be either constant or may form a linear slope, Figure 7-23.

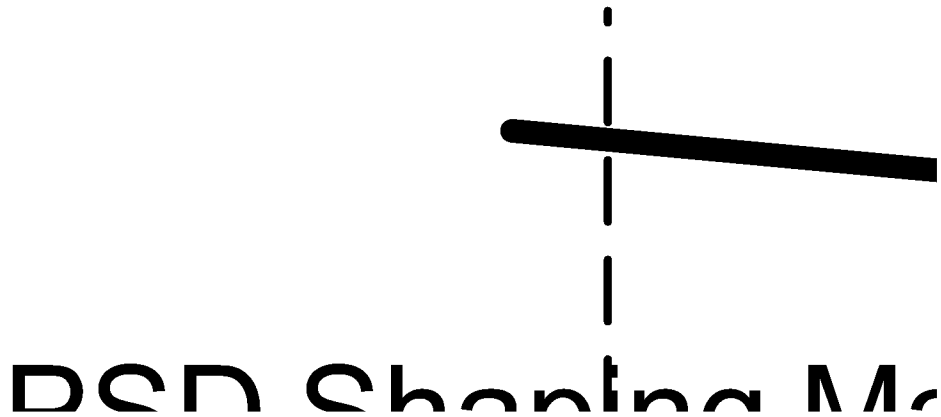

Figure 7-23/G.9960 – Construction of PSM

Each breakpoint of PSM is specified by a sub-carrier index x_n and a value of PSD_n at that sub-carrier expressed in dBm/Hz, $\{x_n, PSD_n\}$. The first breakpoint is always set to the lowest sub-carrier allowed for transmission (index x_1) and the last breakpoint is set to the highest sub-carrier allowed for transmission (index x_H). A PSM including S segments can be represented by (S+1) breakpoints in the following format:

$$\mathrm{PSM}(S) = [\{x_1, PSD_1\},\ \{x_2, PSD_2\}\ \ldots\ \{x_S, PSD_S\},\ \{x_H, PSD_H\}].$$

A node supporting PSD shaping, shall support up to 8 PSM breakpoints. If a node does not support PSD shaping, all sub-carriers subject to the PSD shaping requirement specified by PSM shall be masked (switched off).

The maximum steepness of PSM slopes is for further study.

If one or more PSM breakpoints are set above the LPM or PSDC, the transmit PSD mask shall be set to: TxPSD = min(PSM, LPM, PSDC). At least one of PSM breakpoints shall be on the LPM (this breakpoint corresponds to tss = 1). All values of PSD_n of PSM breakpoints shall be set above $\mathrm{PSM}_{\mathrm{min}}$. The value of $\mathrm{PSM}_{\mathrm{min}}$ shall not be more than 30 dB below the peak of the PSD mask.

NOTE: PSM breakpoints do not have any relation with SM breakpoints; SM and notched International Amateur radio bands always overrides PSM if defined over the same indices.

7.1.5.4 Notching of International Amateur radio bands

Any node operating over phone line or power line shall be able to reduce the PSD of the transmitted signal to a level below −80 dBm/Hz in all International Amateur radio bands (see Annex D) simultaneously or in any selected group of them. The band to be notched is specified by the start and stop sub-carrier indices, same as described in §7.1.5.1. The PSD slopes forming a notch are vendor discretionary.

7.2 Media dependent specification

7.2.1 Physical layer specification over phone lines

7.2.1.1 Control parameters

Table 7-30 shows the OFDM control parameters for various bandplans defined in phone lines.

Table 7-30/G.9960 – OFDM control parameters for phone lines

Domain Type	Phone Line Baseband	
Bandplan Name	**50MHz – TB (NOTE 2)**	**100MHz – TB (NOTE 3)**
N	1024	2048
F_{SC}	48.828125 kHz	48.828125kHz
N_{GI}	$N/32\times k$ for k=1,…,8 samples @ 50 Msamples/s	$N/32\times k$ for k=1,…,8 samples @ 100 Msamples/s
$N_{GI\text{-}HD}$	N/4 = 256 samples @ 50 Msamples/s	N/4 = 512 samples @ 100 Msamples/s
$N_{GI\text{-}DF}$	N/4=256 samples @ 50 Msamples/s	N/4=512 samples @ 100 Msamples/s
β	N/32 = 32 samples @ 50 Msamples/s	N/32 = 64 samples @ 100 Msamples/s
F_{US}	25 MHz	50 MHz
$F_C = F_{UC} + F_{US}$	$F_{UC} = 0$	$F_{UC} = 0$
Sub-carrier frequency f for sub-carrier index i (NOTE 1)	$f = i \times F_{SC}$ where $i = 0$ to $i = N - 1$ (indexing rule #1)	$f = i \times F_{SC}$ where $i = 0$ to $i = N - 1$ (indexing rule #1)
NOTES: 1. See §7.1.4.1 for more details on sub-carrier indexing rules. 2. The range of sub-carrier frequencies is between 0 and 50 MHz 3. The range of sub-carrier frequencies is between 0 and 100 MHz		

7.2.1.2 Preamble

7.2.1.2.1 Default preamble structure

Table 7-31 illustrates the default preamble structure for phone line.

Table 7-31/G.9960 – Default preamble structure for phone line

	1st Section	2nd Section	3rd Section	Header	4th Section
Number of Symbols (N_i)	8	2	0	NOTE	1.25
Sub-carrier spacing ($k_i \times F_{SC}$)	8	8	0		1
NOTE – The value for PHI in the PHY-frame header shall be set to 1 (N_4).					

7.2.1.3 PSD mask specifications

The Limit PSD mask for operation over phone lines (bandplans 50MHz-TB and 100MHz-TB) shall be as presented in Figure 7-24 with the values of frequencies f_L-f_H as presented in Table 7-32.

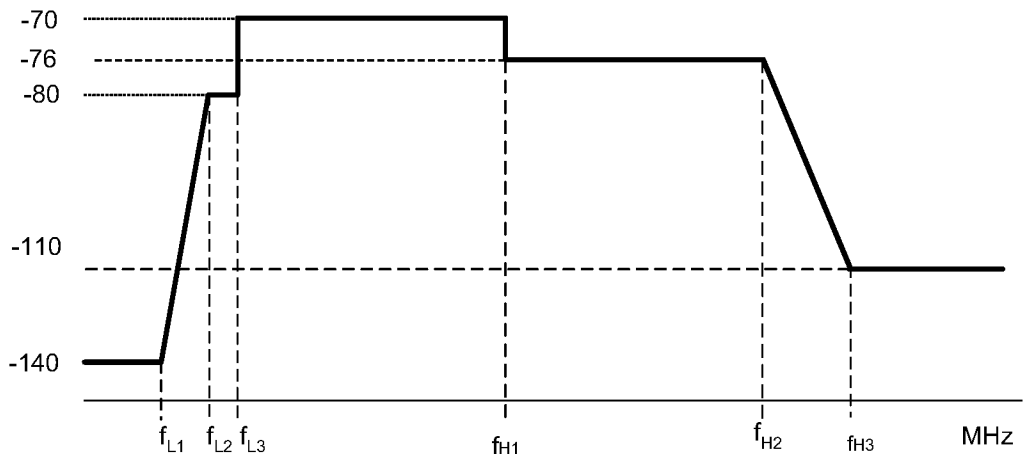

Figure 7-24/G.9960 – Limit PSD mask for transmission over phone lines (Amateur radio-band notches are not shown)

NOTE: Figure 7-24 doesn't include Amateur radio notches.

The values of frequency spectrum parameters for phone lines are presented in Table 7-32. Interim points between those define in Figure 7-24 shall be obtained by linear interpolation (in dB over linear frequency scale).

Table 7-32/G.9960 – Parameters of Limit PSD mask over phone lines

Parameters	Frequency, MHz	PSD, dBm/Hz	Note/Description
f_{L1}	1.7	−140	Provides protection of splitter-less ADSL
f_{L2}	3.5	−80	Coincides with the Amateur radio band
f_{L3}	4.0		
$f_{L3} + \Delta F$	$4.0 + \Delta F$	−70	ΔF is an arbitrary small positive value
f_{HAM}	As defined in Table D-1	−80	Additional notches can be added based on regional regulations
$f_{H1} - \Delta F$	$30 - \Delta F$	−70	ΔF is an arbitrary small positive value
f_{H1}	30	−76	
f_{H2}	100		
f_{H3}	120	−110	
NOTE – All sub-carriers below $f_{L3}+\Delta F$, and above $f_{H2} - \Delta F$, and inside the notched Amateur radio bands shall not be used for transmission (neither data nor any auxiliary information).			

NOTES:

1. The Limit PSD mask shown in Figure 7-24 presents for the case when all sub-carriers allowed for transmission are in use, each with its maximum transmit power. In case of additional spectrum shaping is used as described in §7.1.5.3 (e.g. to provide spectrum compatibility, comply with wide-band power limit, or other), various parts of this PSD mask could be reduced by switching sub-carriers off or reducing their transmit power. Additional frequency notches may be applied if required.

2. VDSL is usually deployed using a service splitter (G.993.2 doesn't encourage splitterless VDSL installations). This allows the use of the G.9960 spectrum down to f_{L3}. If splitterless VDSL is used, the low frequency of G.9960 spectrum shall be moved up and set above the upper downstream sub-carrier of VDSL2.

7.2.2 Physical layer specification over power lines

7.2.2.1 Control parameters

Table 7-33 shows the OFDM control parameters for various bandplans defined in power lines.

Table 7-33/G.9960 – OFDM control parameters for power lines

Domain Type	Power Line Baseband		Power Line Passband
Bandplan Name	**50MHz – PB (NOTE 3)**	**100MHz – PB (NOTE 4)**	**100MHz – PP (NOTE 5)**
N	2048	4096	1024
F_{SC}	24.4140625 kHz	24.4140625 kHz	97.65625 kHz
N_{GI}	$N/32\times k$ for k=1,…,8 samples @ 50 Msamples/s	$N/32\times k$ for k=1,…,8 samples @ 100Msamples/s	$N/32\times k$ for k=1,…,8 samples @ 100Msamples/s
$N_{GI\text{-}HD}$	N/4=512 samples @ 50 Msamples/s	N/4=1024 samples @ 100 Msamples/s	N/4=256 samples @ 100 Msamples/s
$N_{GI\text{-}DF}$	N/4=512 samples @ 50 Msamples/s	N/4=1024 samples @ 100 Msamples/s	N/4=256 samples @ 100 Msamples/s
β	N/8 = 256 samples @ 50 Msamples/s	N/8 = 512 samples @ 100 Msamples/s	N/32 = 32 samples @ 100 Msamples/s
F_{US}	25 MHz	50 MHz	150 MHz
$F_C = F_{UC} + F_{US}$	$F_{UC} = 0$	$F_{UC} = 0$	$F_{UC} = 0$
Sub-carrier frequency f for sub-carrier index i (NOTE 1)	$f = i \times F_{SC}$ where $i = 0$ to $i = N - 1$ (indexing rule #1)	$f = i \times F_{SC}$ where $i = 0$ to $i = N - 1$ (indexing rule #1)	$f = F_{US} - (N/2 - i) \times F_{SC}$ where $i = 0$ to $i = N - 1$ (indexing rule #1)

NOTES:
1. See §7.1.4.1 for more details on sub-carrier indexing rules.
2. The 50 MHz and 100 MHz bandplans may be used by nodes operating in the same Power Line Baseband domain.
3. The range of sub-carrier frequencies is between 0 and 50 MHz
4. The range of sub-carrier frequencies is between 0 and 100 MHz
5. The range of sub-carrier frequencies is between 100 MHz and 200 MHz

7.2.2.2 Preamble

7.2.2.2.1 Default preamble structure

Table 7-34 illustrates the default preamble structure for power line.

Table 7-34/G.9960 – Default preamble structure for power line

	1st Section	2nd Section	3rd Section	Header	4th Section
Number of Symbols (N_i)	7	2	0	NOTE	1.25
Sub-carrier spacing ($k_i \times F_{SC}$)	8	8	0		1
NOTE – The value for PHI in the PHY-frame header shall be set to 1 (N_4).					

7.2.2.3 PSD mask specifications

The baseband Limit PSD mask for operation over power lines (bandplans 50MHz-PB and 100MHz-PB) shall be as presented in Figure 7-25 with the values of frequencies f_L-f_H as presented in Table 7-35. The passband Limit PSD mask for operation over power lines (bandplan 100MHz-PP) shall be as defined in Figure 7-26 and Table 7-36.

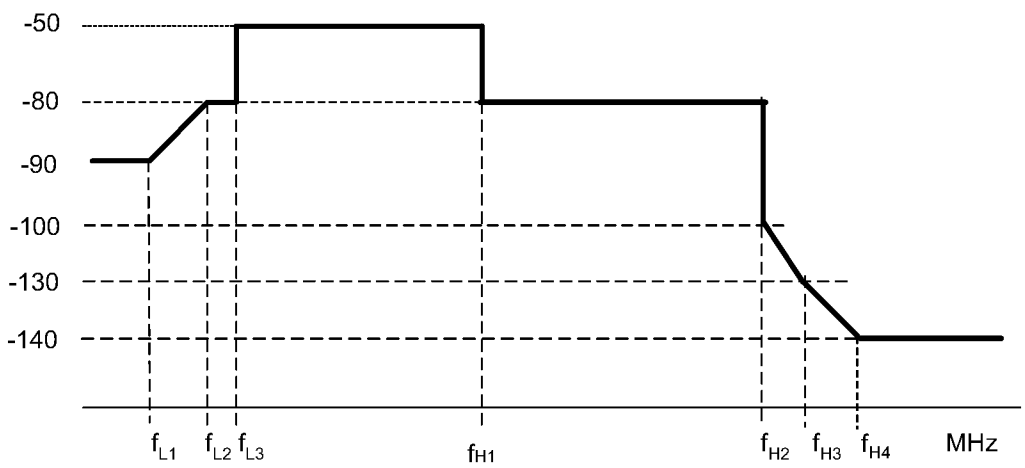

Figure 7-25/G.9960 – Limit PSD mask for baseband transmission over power lines (Amateur radio-band notches are not shown)

NOTE: Figure 7-25 doesn't include Amateur radio notches.

The frequency spectrum parameters for baseband bandplans are presented in Table 7-35. Interim points between those defined in Figure 7-25 are obtained by linear interpolation (in dB over linear frequency scale).

Table 7-35/G.9960 – Parameters of Limit PSD mask for bandplans 50MHz-PB and 100MHz-PB

Parameters	Frequency, MHz	PSD, dBm/Hz	Note/Description
f_{L1}	1.1	−90	Additional reduction below 1.1 MHz is to reduce crosstalk into ADSL
f_{L2}	1.8	−80	Coincides with the Amateur radio band
f_{L3}	2.0		
$f_{L3} + \Delta F$	$2.0 + \Delta F$	−50	ΔF is an arbitrary small positive value
f_{HAM}	As defined in Table D-1	−80	Additional notches could be added based on regional regulations
$f_{H1} - \Delta F$	$30 - \Delta F$	−50	ΔF is an arbitrary small positive value
f_{H1}	30	−80	ΔF is an arbitrary small positive value
f_{H2}	$100 - \Delta F$		
f_{H2}	100	−100	
f_{H3}	110	−130	
f_{H4}	120	−140	
NOTE – All sub-carriers below $f_{L3} + \Delta F$, and above $f_{H2} - \Delta F$, and inside the notched Amateur radio bands shall not be used for transmission (neither data nor any auxiliary information).			

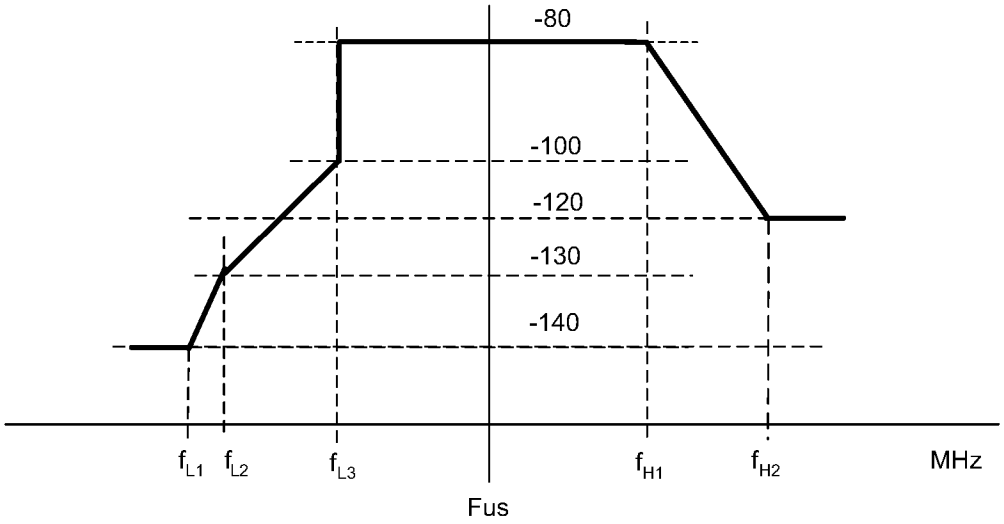

Figure 7-26/G.9960 – Limit PSD mask for passband transmission over power lines

The frequency spectrum parameters for passband bandplans are presented in Table 7-36. Interim points between those defined in Figure 7-26 are obtained by linear interpolation (in dB over linear frequency scale).

Table 7-36/G.9960 – Parameters of Limit PSD mask for bandplan 100MHz-PP

Parameters	Frequency, MHz	PSD, dBm/Hz	Note/Description
f_{L1}	80	−140	
f_{L2}	90	−130	
f_{L3}	100	- 100	
$f_{L3} + \Delta F$	$100 + \Delta F$	-80	ΔF is an arbitrary small positive value
f_{H1}	200	−80	
f_{H2}	240	−120	
All sub-carriers below $f_{L3} + \Delta F$, and above $f_{H1} - \Delta F$, and inside the notched Amateur radio bands will not be used for transmission (neither data nor any auxiliary information).			

NOTES:

1. The Limit PSD mask shown in Figure 7-25 and Figure 7-26 presents the case when all sub-carriers allowed for transmission are in use, each with its maximum transmit power. In case of additional spectrum shaping is used as described in §7.1.5.3 (e.g. to provide spectrum compatibility with VDSL, comply with wide-band power limit, or other), various parts of this PSD mask could be reduced by switching sub-carriers off or reducing their transmit power. Additional frequency notches may be applied if required.

2. The value of −80dBm/Hz for the required attenuation in Amateur radio bands is adopted from [1]. This value might be revised for G.9960 due to concerns of reduced balance of power line wires.

7.2.3 Physical layer specification over coax

7.2.3.1 Control parameters

Table 7-37 shows the OFDM control parameters for various bandplans defined in coax cable.

Table 7-37/G.9960 – OFDM control parameters for coax cables

Domain Type	Coax Baseband		Coax RF	
Bandplan Name	**50MHz – CB (NOTE 4)**	**100MHz – CB (NOTE 5)**	**50MHz – RF (NOTE 6)**	**100MHz – RF (NOTE 7)**
N	256	512	256	512
F_{SC}	195.3125 kHz	195.3125 kHz	195.3125 kHz	195.3125 kHz
N_{GI}	$N/32\times k$ for k=1,…,8 samples @ 50 Msamples/s	$N/32\times k$ for k=1,…,8 samples @ 100 Msamples/s	$N/32\times k$ for k=1,…,8 samples @ 50 Msamples/s	$N/32\times k$ for k=1,…,8 samples @ 100 Msamples/s
$N_{GI\text{-}HD}$	N/4=64 samples @ 50 Msamples/s	N/4=128 samples @ 100 Msamples/s	N/4=64 samples @ 50 Msamples/s	N/4=128 samples @ 100 Msamples/s
$N_{GI\text{-}DF}$	N/4=64 samples @ 50 Msamples/s	N/4=128 samples @ 100 Msamples/s	N/4=64 samples @ 50 Msamples/s	N/4=128 samples @ 100 Msamples/s
β	N/32=8 samples @ 50 Msamples/s	N/32=16 samples @ 100 Msamples/s	N/32=8 samples @ 50 Msamples/s	N/32=16 samples @ 100 Msamples/s
F_{US}	25 MHz	50 MHz	25 MHz	50 MHz
$F_C = F_{UC} + F_{US}$	$F_{UC} = 0$	$F_{UC} = 0$	$F_C = X$ (NOTE 3)	$F_C = Y$ (NOTE 3)
Sub-carrier frequency f for sub-carrier index i (NOTE 1)	$f = i \times F_{SC}$ where $i = 0$ to $i = N - 1$ (indexing rule #1)	$f = i \times F_{SC}$ where $i = 0$ to $i = N - 1$ (indexing rule #1)	indexing rule #1 if $X \neq Y$, or indexing rule #2 if $X = Y$. (NOTE 8)	indexing rule #1 if $X \neq Y$, or indexing rule #2 if $X = Y$. (NOTE 8)

NOTES:
1. See §7.1.4.1 for more details on sub-carrier indexing rules.
2. The 50MHz and 100MHz bandplans may be used by nodes operating in the same Coax Baseband domain. The same principle applies to 50MHz and 100MHz bandplans defined for Coax RF domain.
3. The values of center frequency F_C shall be selected from the valid set defined in Table 7-28 and may be subject to regional spectrum management rules (see regional Annexes).
4. The range of sub-carrier frequencies is between 0 and 50 MHz
5. The range of sub-carrier frequencies is between 0 and 100MHz
6. The range of sub-carrier frequencies is between (X – 25) MHz and (X + 25) MHz
7. The range of sub-carrier frequencies is between (Y – 50) MHz and (Y + 50) MHz
8. The specific indexing rule is specified in each regional Annex.

7.2.3.2 Preamble

7.2.3.2.1 Default preamble structure

Table 7-38 illustrates the default preamble structure for Coax BB.

Table 7-38/G.9960 – Default preamble structure for coax BB

	1st Section	2nd Section	3rd Section	Header	4th Section
Number of Symbols (N_i)	10	4	2.5	NOTE	0
Sub-carrier spacing ($k_i \times F_{SC}$)	4	4	1		N/A
NOTE – The value for PHI in the PHY-frame header shall be set to 0 (N_4).					

Table 7-39 illustrates the default preamble structure for Coax RF.

Table 7-39/G.9960 – Default preamble structure for coax RF

	1st Section	2nd Section	3rd Section	Header	4th Section
Number of Symbols (N_i)	10	4	2.5	NOTE	0
Sub-carrier spacing ($k_i \times F_{SC}$)	4	4	1		N/A
NOTE – The value for PHI in the PHY-frame header shall be set to 0 (N_4).					

7.2.3.3 PSD mask specifications

The Limit PSD mask for operation over RF coax (bandplans 50MHz-RF, 100MHz-RF) is presented in Figure 7-27 with the frequencies as presented in Table 7-40 and with the bandwidth $BW = f_{H1} - f_{L3}$.

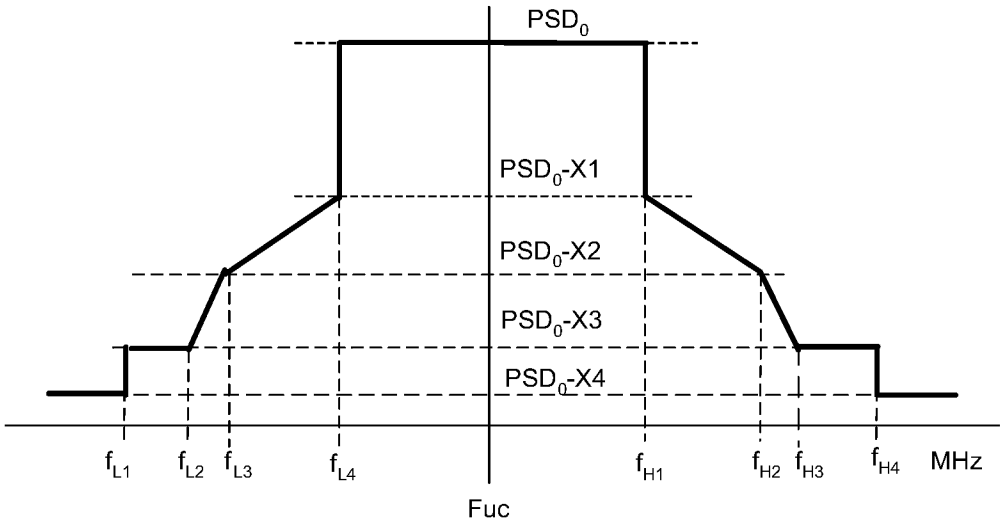

Figure 7-27/G.9960 - Limit PSD mask of a single channel for RF transmission over coax

The proposed values of frequency spectrum parameters for coax are presented in Table 7-40 and Table 7-41. It is assumed that interim points between those defined in Figure 7-27 are obtained by linear interpolation (dB over linear frequency scale).

Table 7-40/G.9960 – Parameters of Limit PSD mask over RF coax for bandplan 50MHz-RF

Parameters	Frequency, MHz	PSD, dBm/Hz (NOTE)	Note/Description
$F_{UC} - f_{L1}$	75	$PSD_0 - 50$	
$F_{UC} - f_{L2}$	50	$PSD_0 - 45$	
$F_{UC} - f_{L3}$	35	$PSD_0 - 40$	
$F_{UC} - f_{L4}$	25	$PSD_0 - 20$	
	$f_{L4} + \Delta F$	PSD_0	ΔF is an arbitrary small positive value
F_{UC}	M*25MHz	PSD_0	
	$f_{H1} - \Delta F$	PSD_0	ΔF is an arbitrary small positive value
$f_{H1} - F_{UC}$	25	$PSD_0 - 20$	
$f_{H2} - F_{UC}$	35	$PSD_0 - 40$	
$f_{H3} - F_{UC}$	50	$PSD_0 - 45$	
$f_{H4} - F_{UC}$	75	$PSD_0 - 50$	
NOTE – $PSD_0 = -68$ dBm/Hz			

Table 7-41/G.9960 – Parameters of Limit PSD mask over RF coax for bandplan 100MHz-RF

Parameters	Frequency, MHz	PSD, dBm/Hz (NOTE)	Note/Description
$F_{UC} - f_{L1}$	150	$PSD_0 - 50$	
$F_{UC} - f_{L2}$	100	$PSD_0 - 45$	
$F_{UC} - f_{L3}$	70	$PSD_0 - 40$	
$F_{UC} - f_{L4}$	50	$PSD_0 - 20$	
	$f_{L4} + \Delta F$	PSD_0	ΔF is an arbitrary small positive value
F_{UC}	M*25MHz	PSD_0	
	$f_{H1} - \Delta F$	PSD_0	ΔF is an arbitrary small positive value
$f_{H1} - F_{UC}$	50	$PSD_0 - 20$	
$f_{H2} - F_{UC}$	70	$PSD_0 - 40$	
$f_{H3} - F_{UC}$	100	$PSD_0 - 45$	
$f_{H4} - F_{UC}$	150	$PSD_0 - 50$	
NOTE – $PSD_0 = -68$ dBm/Hz			

NOTES:

1. All sub-carriers below $f_{L4} + \Delta F$, above $f_{H1} - \Delta F$ will not be used for transmission (neither data nor any auxiliary information).

2. The Limit PSD mask shown in Figure 7-27 presents the case when all sub-carriers allowed for transmission are in use, each with its maximum transmit power. In case additional spectrum shaping is used, as described in §7.1.5.3, the transmit PSD mask can be reduced in the relevant parts of this spectrum by switching sub-carriers off or reducing their transmit power.

3. In cases when more than one channel is established over the same coax cable, appropriate gaps between center frequencies of the channels should be set to account values of the out-of-band PSD presented in Table 7-40 and Table 7-41.

4. Out-of-band spurious signals at the output of G.9960 node operating over coax in RF mode are supposed to meet the Limit PSD mask defined in Table 7-40 and Table 7-41. The limit for total power of out-of-band spurious signals is for further study. The requirements for in-band spurious signals are for further study.

5. Specification of guard bands are for further study.

The Limit PSD mask for operation over baseband coax (bandplans 50MHz-CB, 100MHz-CB) is presented in Figure 7-28 with the frequencies and PSD levels presented in Table 7-42, Table 7-43 and with the bandwidth $BW = f_{H1} - f_{L2}$.

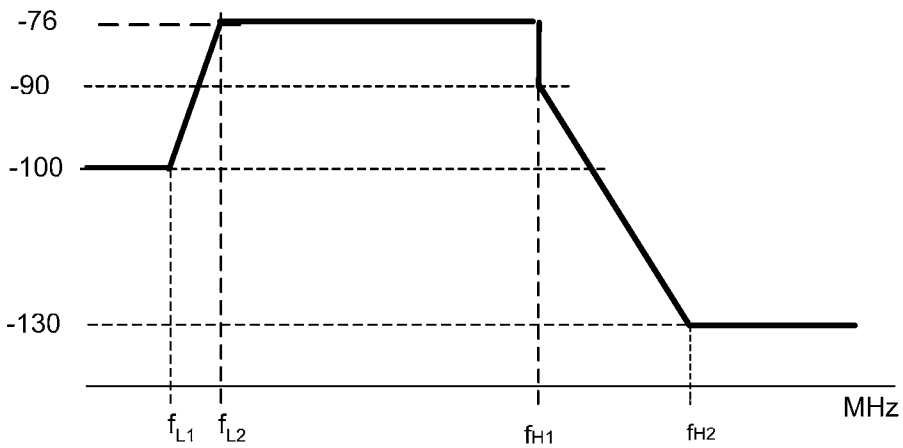

Figure 7-28/G.9960 - Limit PSD mask of baseband coax

The interim points between those defined in Figure 7-28 are obtained by linear interpolation (dB over linear frequency scale).

Table 7-42/G.9960 – Parameters of Limit PSD mask over coax for bandplan 50 MHz-CB

Parameters	Frequency, MHz	PSD, dBm/Hz	Note/Description
f_{L1}	1	−100	
f_{L2}	5	-76	
$f_{H1} - \Delta F$	$50 - \Delta F$	-76	ΔF is an arbitrary small positive value
f_{H1}	50	-76	
f_{H2}	70	−135	

Table 7-43/G.9960 – Parameters of Limit PSD mask over coax for bandplan 100MHz-CB

Parameters	Frequency, MHz	PSD, dBm/Hz	Note/Description
f_{L1}	1	−100	
f_{L2}	5	-76	
$f_{H1} - \Delta F$	$100 - \Delta F$	-76	ΔF is an arbitrary small positive value
f_{H1}	100	-76	
f_{H2}	140	−135	

NOTES:

1. All sub-carriers below f_{L2} and above f_{H1} - ΔF will not be used for transmission (neither of data nor of any auxiliary information).

2. The Limit PSD mask shown in Figure 7-28 presents the case when all sub-carriers allowed for transmission are in use, each with its maximum transmit power. In case additional spectrum shaping is used, as described in §7.1.5.3, the transmit PSD mask can be reduced in the relevant parts of this spectrum by switching sub-carriers off or reducing their transmit power.

7.2.3.4 Coexistence on coax

G.9960 nodes on coax shall use specified detection and frequency agility capabilities and procedures to avoid interfering with non-G.9960 networks and other services (e.g., communication and broadcast services) operating on the same coax plant. Details of these capabilities and procedures will be specified in a future version of this Recommendation.

7.2.4 Transmitter EVM Requirements

EVM requirements are for further study.

Annex A – Regional requirements for North America

For further study

Annex C – Regional requirements for Japan

C.1 Scope

This annex describes domestic practices, standards for each medium (coax cable, phone line and power line) and the way to apply the G.9960 system under those conditions in Japan.

C.2 Media dependent specification

C.2.1 Physical layer specification over phonelines

For further study.

C.2.2 Physical layer specification over powerlines

C.2.2.1 Frequency use for powerlines

All HN nodes over powerlines shall comply with national regulations in Japan [1], which states the frequency band that one can use without any license is restricted to between 2 MHz and 30 MHz, and the interference level due to power line communication is also restricted.

Furthermore, the regulations give limitations of where they can be used; that is, the usage of power line communications is only limited inside buildings and not allowed outside buildings.

C.2.3 Physical layer specification over coax

C.2.3.1 Bandplan

In addition to the OFDM control parameters in Table 7-37, the OFDM control parameters shown in Table C-1 may be used. It should be noted that coaxial home network connected to cable access network should not interfere the services offered by the cable television operator to customers.

Table C-1/G.9960 – Optional OFDM control parameters for coax cables in Japan

Domain Type	Coax RF
Bandplan Name	**200MHz – RF (NOTES 2, 3)**
N	1024
F_{SC}	195.3125 kHz
N_{GI}	For further study
$N_{GI\text{-}HD}$	For further study
$N_{GI\text{-}DF}$	For further study
β	For further study
F_{US}	100 MHz
$F_C = F_{UC} + F_{US}$	$F_C = Z$ (NOTE 4)
Sub-carrier frequency f for sub-carrier index i (NOTE 1)	Indexing rule #2 if X=Y=Z, otherwise #1. (NOTE 5)

NOTES:
1. See §7.1.4.1 for more details on sub-carrier indexing rules.
2. The 200MHz bandplan on this table and the 50MHz and 100MHz bandplans shown in Table 7-37 may be used by nodes operating in the same Coax RF domain.
3. The range of sub-carrier frequencies is between (Z – 100) MHz and (Z + 100) MHz
4. The values of center frequency F_C shall be selected from the valid set defined in Table 7-28 and may be subject to regional spectrum management rules.
5. X and Y are F_C of bandplan 50MHz-RF and 100MHz-RF respectively (See Table 7-37).

C.2.3.2 Transmitter EVM Requirements for RF coax

The EVM requirements are for further study.

C.3 Bibliography

[1] Radio wave Law enforcement regulations 46-2 (Japanese), http://law.e-gov.go.jp/htmldata/S25/S25F30901000014.html

Annex D – International Amateur radio bands

Table D-1/G.9960 – International Amateur radio bands in the frequency range 0-30 MHz

Band start (kHz)	Band stop (kHz)
1 800	2 000
3 500	4 000
7 000	7 300
10 100	10 150
14 000	14 350
18 068	18 168
21 000	21 450
24 890	24 990
28 000	29 700

Appendix I: Consideration of Domains Comprising Multiple Wire Classes

The focus of the HN network is to optimize domains to operate on each individual wire class with multiple domains interconnected via inter-domain bridges. However, it is possible to interconnect wire classes at the physical layer. Figure I-1 shows several possibilities for such an arrangement. Figure I-1 (A) shows an example network segment comprising coax, phone line and power line. These wires are interconnected at the physical layer; the coax and phone line by a balun, and the phone line and power line by a high-pass filter. Figure I-1 (B) shows a similar case except that the power line segment is no longer connected at the physical layer, instead connecting to the phone line segment via an inter-domain bridge. The physical layer interconnections shown in Figure I-1 are expected to be a small subset of the wiring scenarios encountered when installing an HN network, and it is assumed that such practices will be avoided if possible.

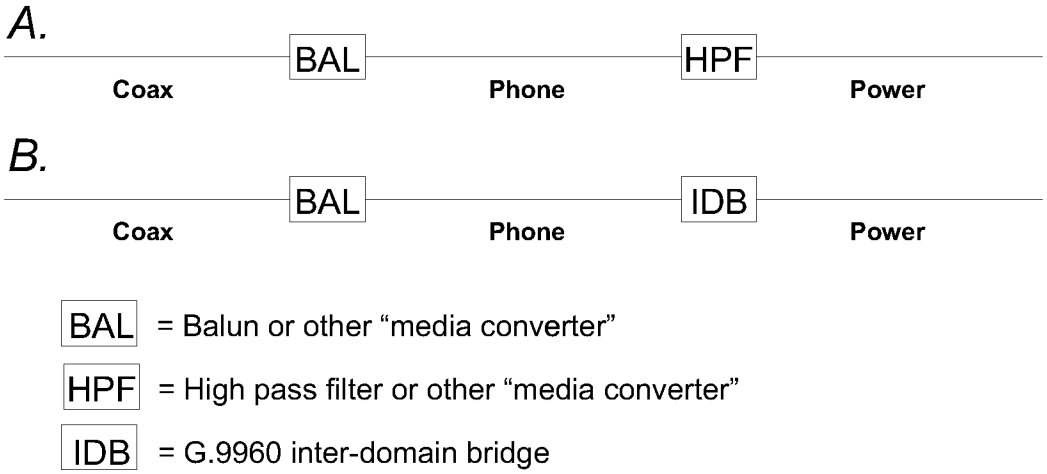

Figure I-1/G.9960 − Example network segments with multiple wire classes connected at the physical layer

By definition a medium is a wire-line facility, of a single wire class, allowing physical connection between network nodes. For the types of cases shown in Figure I-1, having multiple wire classes interconnected by physical layer connections, a medium may be considered to comprise the multiple wire classes and the devices interconnecting them. Given this consideration, a domain may operate over this extended medium. This special use of the term, *medium*, is demonstrated in Figure I-2.

Figure I-2 shows the same network segments given in Figure I-1, and a relative comparison to the relationships between domain, medium and wire class that is shown in Figure 5-5. The allowance for a medium to comprise multiple wire classes in this special case also permits a domain to extend across multiple wire classes that are connected at the physical layer. Figure I-2 (A) shows a domain covering the physically connected coax, phone line and power line segments from Figure I-1 (A), and Figure I-2 (B) similarly shows the physically connected coax and phone line segments of Figure I-1 (B) as well as showing the separate power line domain. Figure I-2 (C) highlights the

capability to have multiple domains, showing two domains (with implied inter-domain bridging) over the coax/phone line combination from Figure I-2 (B).

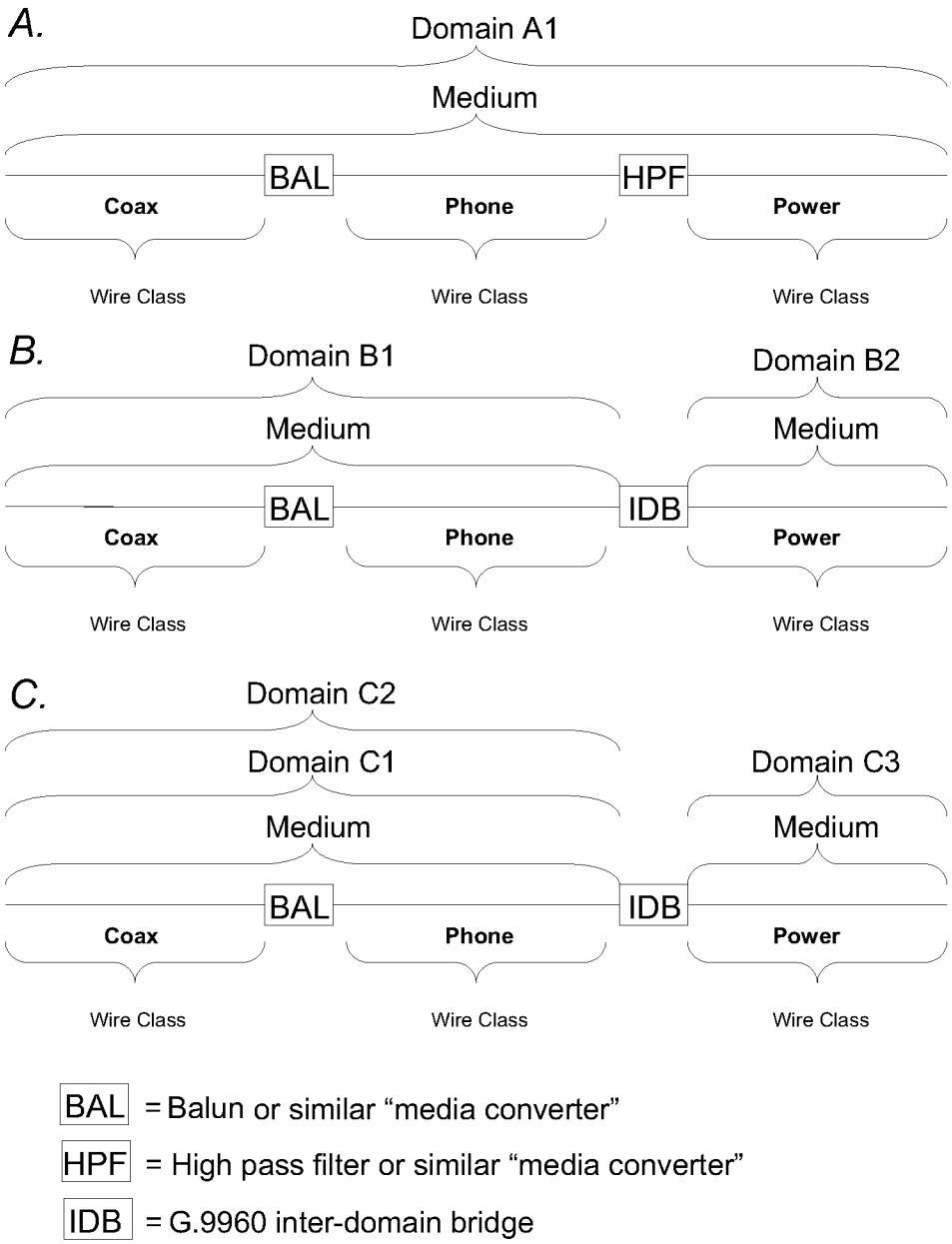

Figure I-2/G.9960 − Example network segments applying special use of the term, *medium*

Appendix II: Examples of HN topologies

An example of HN containing a single domain is shown in Figure II-1 where a single Domain Master coordinates nodes of the domain (i.e. assigns bandwidth resources and priority). In this example, the domain is bridged to the Access Network via the Node D (it is also a Domain Master) which is assumed to be part of the Residential Gateway. In PM nodes A, B, C, and D communicate directly to each other. In CM one of the nodes is assigned as DAP (Node D in this example), and all nodes can communicate to each other only via this node. In UM each of the nodes A-D can communicate directly to each other or indirectly, via other nodes operating as Relay nodes. In this example, Node D (Domain Master) serves as a Relay Node, while other nodes use either PP type of communication or Node D as a relay if required.

While in either PM, CM or UM, nodes A-D can transmit under limitation of bandwidth resources and priorities assigned by the Domain Master.

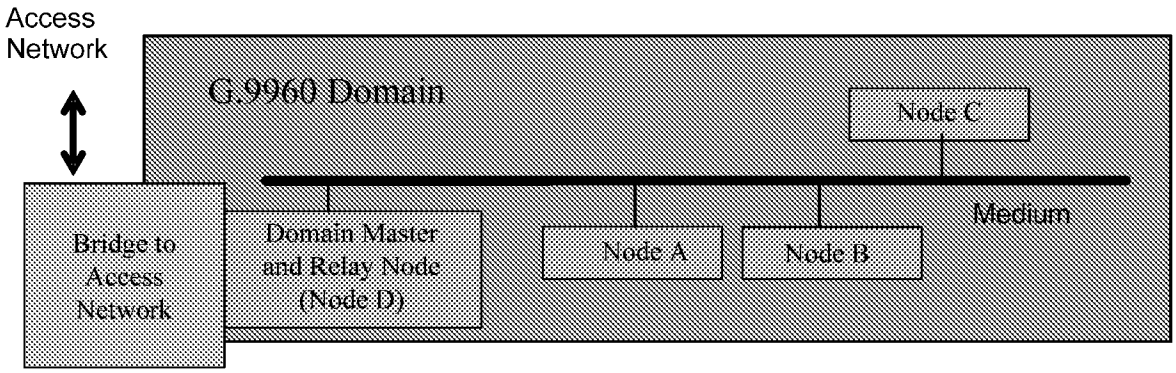

Figure II-1/G.9960 − Example of HN containing single domain

An example of HN containing a single domain that operates in UM using both CTR and PP types of communication is depicted in Figure II-2. The subset of nodes that use CTR type of communication includes nodes B, C, D and F where Node D operates as a Relay node for this group of nodes. All other nodes can communicate directly (i.e., PP type) or via a Relay node (i.e., CTR type). A single Domain Master (in this case Node A) coordinates the HN nodes of the domain. The domain is bridged to the Access Network via Node A, which is assumed to be part of the Residential Gateway. While either using PP or CTR type of communication, Nodes A through G can transmit under the limitation of bandwidth resources and priorities assigned by the Domain Master. Packets from nodes B, C and F addressed to nodes outside the domain are sent to Node A via the relay Node D; Node A is connected to the inter-domain bridge. Packets from nodes D, E and G addressed to nodes outside the domain are sent to node A directly.

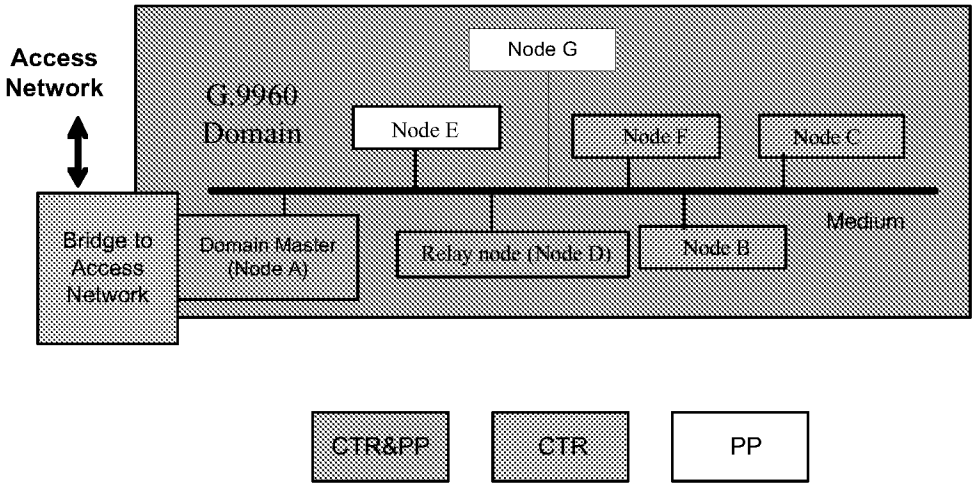

Figure II-2/G.9960 − Example of HN containing single domain using UM (combined PP& CTR)

An example of HN containing three domains with corresponding Domain Masters established on two different media is depicted in Figure II-3. Nodes of domain 1 and of domain 3 operate over the same medium (medium 1). In this example, it is assumed that domain 1 and domain 3 operate on different spectrum bands. Those two domains are bridged via an inter-domain bridge (on Layer 2 or Layer 3). Domain 2 operates on a different medium (denoted as medium 2). Domains 1 and 2 are bridged to the Access Network. In Figure II-3 it is assumed that the Domain Master of domain 2 and Node A of domain 1 are parts of the Residential Gateway. Domains 1 and 3 are connected by an inter-domain bridge. Each of three domains can operate in either PM, UM or CM mode of operation, independently of the operation mode used by other domains.

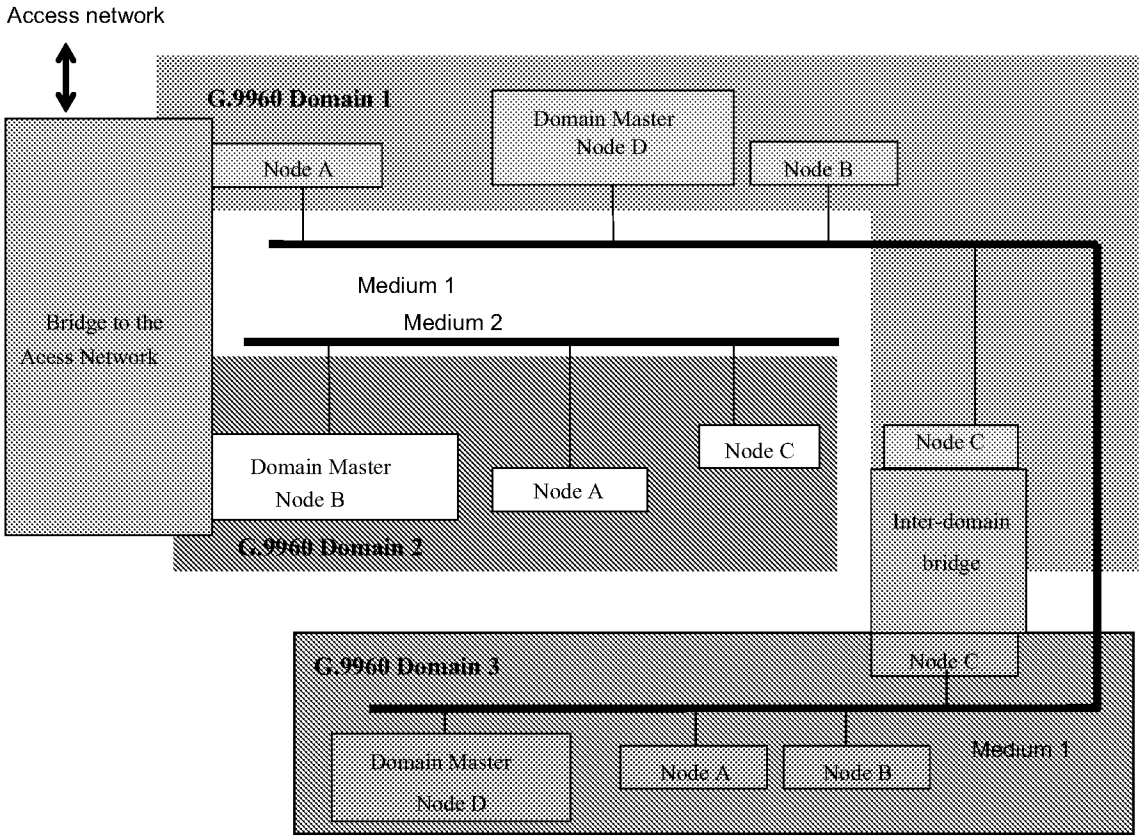

Figure II-3/G.9960 – Example of HN comprising three domains

An example of a network containing HN and an Alien domain is shown in Figure II-4. The example shows an HN network containing two domains (domains 1 and 2) with corresponding Domain Masters established on two different media and bridged via an inter-domain bridge (Layer 2 or Layer 3). An Alien domain is established on the same medium as domain 1 and bridged to the HN (on Layer 2 or Layer 3). HN nodes of domain 1 and of domain 2 in Figure II-4 operate over different media, while nodes A1-A3 which are non-HN nodes, share the same medium with domain 1. The Domain Master of domain 1 considers the Alien domain as another network client connected to the corresponding HN node of domain 1. Operation of this Alien domain and its interconnection with HN is out of scope of G.9960.

In this example, Node A of domain 1 is bridged to the Access network. This bridge is usually a part of the Residential Gateway.

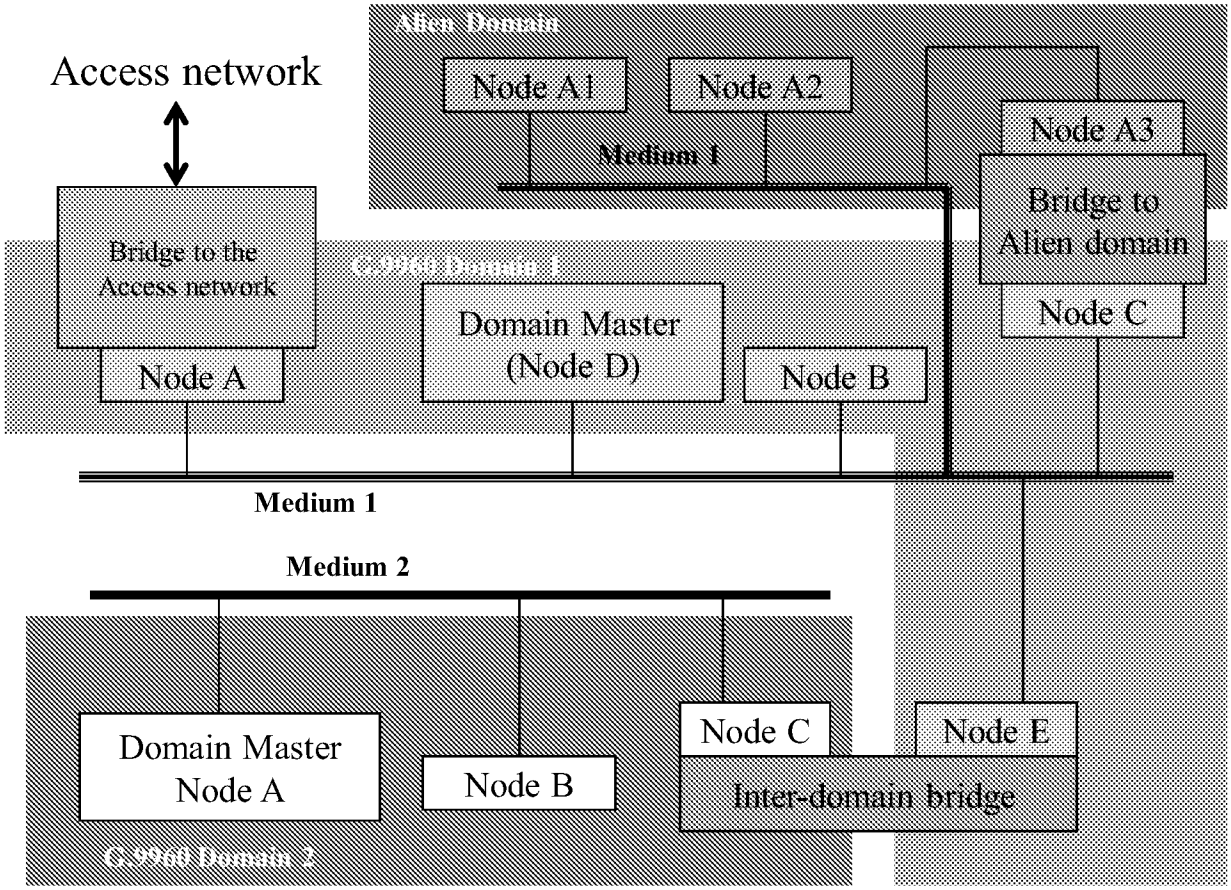

Figure II-4/G.9960 − Example of HN sharing medium with an Alien Domain

An example of HN as a part of residential broadband access is presented in Figure II-5. In the example, home network includes three domains established over coax, phone, and power line wiring. Alien domains of the network are established by the Residential Gateway and may include WLAN IEEE 802.11, USB2, and IEEE 802.3 (Ethernet). RG serves as a bridge allowing communication with Alien domains (e.g., 802.11) and with Access Network (e.g. PON or DSL).

Each HN node in Figure II-5 is configured for the medium it is connected to. It can communicate with any other HN node of the same domain using either PP or CTR type of communication. Communication between HN nodes of different HN domains (e.g., between coax and phone line in Figure II-5) is via inter-domain bridges or via the RG. Communication with the nodes of Alien domains and with Access network is via bridges which are a part of RG.

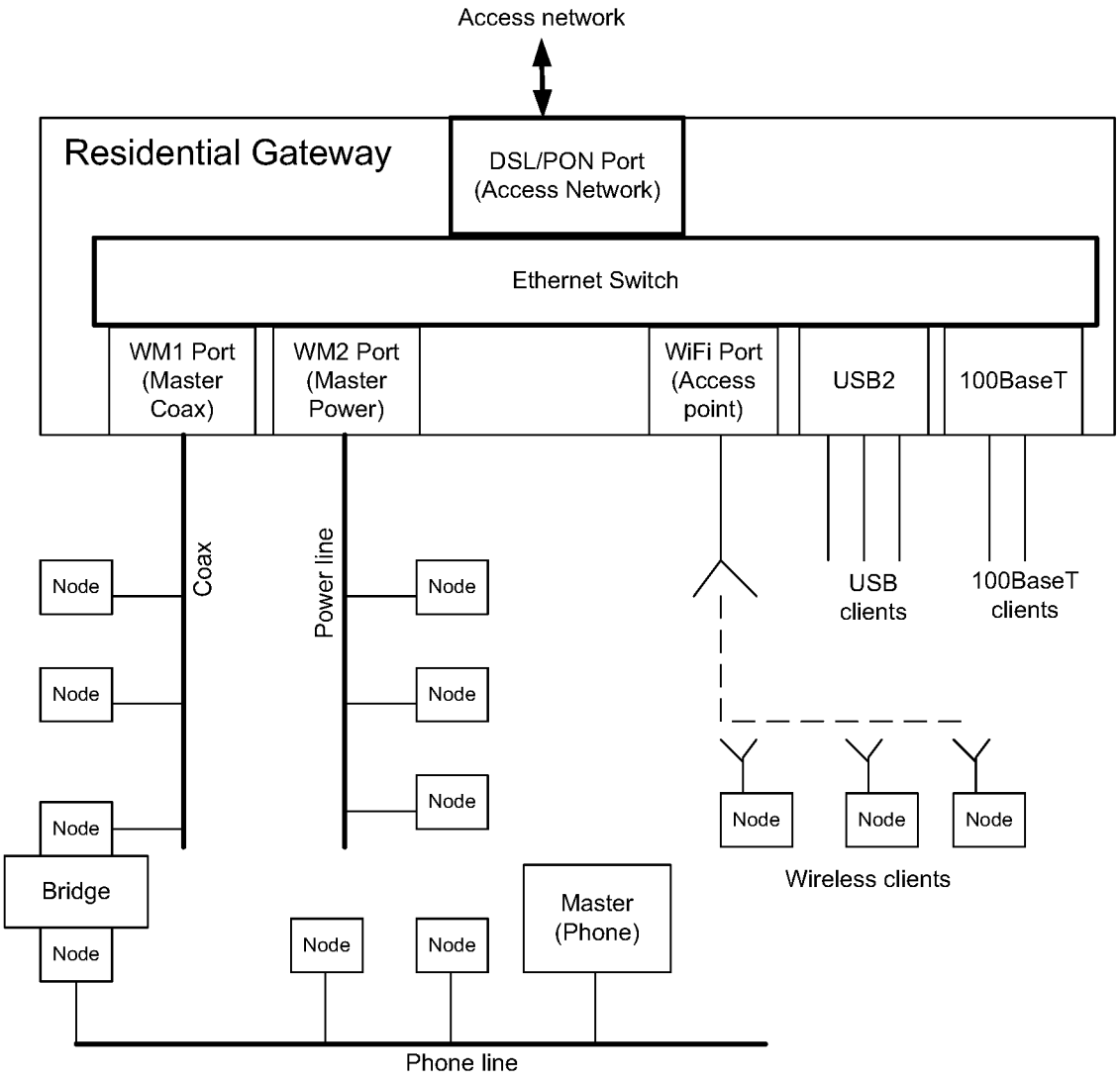

Figure II-5/G.9960 − Example of HN supporting residential broadband access

Appendix III: Spectral usage

III.1 Scope

This appendix describes information on spectral usage on each medium (coax cable, phone line and power line).

III.2 Spectral usage in Japan

III.2.1 Frequency allocation for coax

There are mainly three types of services which are mapped to in-home coax medium:

- Terrestrial broadcasting
- Satellite broadcastings
- CATV services

The frequency allocations for all cases are shown in this clause.

It should be noted that coaxial home network connected to cable access network should not interfere the services offered by the cable television operator to customers. The general use of the frequency by the cable television operator is 5 to 770MHz.

III.2.1.1 Terrestrial broadcast signal mapped to coax cable

Table III-1 shows the frequency allocation for terrestrial TV broadcasting mapped to coax cable. Currently, both analog TV broadcasting (VHF/UHF) and digital TV broadcasting (UHF) are in service [1]. But analog TV broadcasting services will be discontinued on 24th July 2011 [2][3] and non-TV broadcasting and other telecommunications are planned to use these bands after that. G.9960 is one of the candidate services for empty bands if available, but this is for further study.

Table III-1/G.9960 – Frequency allocation for terrestrial broadcast signals mapped to a coax cable

	Frequency [MHz]	Remarks
	90 – 108 *	• Used for analog TV broadcasting till 24th July 2011 • The use after 25th July 2011 is not determined at the time of publication • Retransmission of terrestrial digital TV broadcasting (OFDM)
	108 – 170 *	• Retransmission of terrestrial digital TV broadcasting (OFDM)
	170 – 222 *	• Used for analog TV broadcasting till 24th July 2011 • The use after 25th July 2011 is not determined at the time of publication • Retransmission of terrestrial digital TV broadcasting (OFDM)
	222 – 470 *	• Retransmission of terrestrial digital TV broadcasting (OFDM)
	470 – 710 *	• Used for analog TV broadcasting till 24th July 2011 • Used for digital TV broadcasting • Retransmission of terrestrial digital TV broadcasting (OFDM)
	710 – 770 *	• Used for TV broadcasting till 24th July 2012 • The use after 25th July 2012 is not determined at the time of publication • Retransmission of terrestrial digital TV broadcasting (OFDM)
* Frequency band usage for G.9960 including guard band is for further study.		

III.2.1.2 Broadcast Satellite (BS) and Communication Satellite (CS) signal mapped to coax cable

Satellite broadcastings (BS and CS) using around 12 GHz of frequency [1] are down-converted to intermediate frequency (BS-IF/CS-IF) at an antenna before transmission to a coax cable. The BS and CS need dedicated receiver antennas and there are various cases to use in-home coax cables depending on locations of antennas and connection points to in-home coax system. Basically, BS-IF/CS-IF signals come from an antenna or CATV. Table III-2 shows satellite broadcast signals mapped to a coax cable.

Table III-2/G.9960 – Frequency allocation for satellite broadcast signals mapped to a coax cable

Broadcast satellite services	BS-IF/CS-IF [MHz]	Remarks
BS *	1035.95 – 1331.50	BS-IF transmission
110˚ CS *	1596 – 2070	CS-IF transmission
JC SAT-3,4 *	968 – 2055	CS-IF transmission
Superbird C *	1020 – 2040	CS-IF transmission
* Frequency band usage for G.9960 including guard band is for further study.		

III.2.1.3 CATV services on coax cable

Table III-3 shows the frequency allocation of other services [4][5]. Since frequencies below 770MHz are currently used for various services listed in Table III-3, the usage for other services such as G.9960 is for further study.

Table III-3/G.9960 – Frequency allocation of other services on coax cable

Frequency [MHz]	Usage	Remarks
5 – 60 *	• Upstream CATV signal (cable internet signal, VoIP, VOD, relay broadcast, pilot signal etc.)	• Being used for Cable Modem(CM) up-stream signals [6][7][8] • Being used for control signals between CM and Cable Modem Termination
70 – 76 *	• Downstream pilot signal, analog HT (Home Terminal) control signal, monitoring signal of amplifier	• Being used for Cable Modem(CM) up-stream signals [6][7][8]
76 – 90 *	• Retransmission of radio broadcasting on cable (FM radio signal)	• Being used for Cable Modem(CM) up-stream signals [8]
90 – 770 *	• Analog cable broadcasting (NTSC-VSB) • Digital cable broadcasting (64/256QAM) • Retransmission of terrestrial analogTV broadcasting (NTSC-VSB) • Retransmission of terrestrial digitall TV broadcasting (OFDM) • Downstream cable internet signal, VoIP, VOD control signal etc.	• Covered by regulation [4]
770 – 1035 **	• Other home network services	
1035 – 2070 *	• BS-IF/CS-IF retransmission	
>2070 **	• Currently not in use at the time of publication	
* Frequency band usage for G.9960 including guard band is for further study. ** Candidate frequency band for G.9960 including guard band.		

III.2.2 Frequency allocation for phone line

(For further study)

III.2.3 Frequency allocation for power line

(For further study)

III.2.4 Bibliography

[1] Spectrum Charts, Ministry of Internal Affairs and Communications, http://www.tele.soumu.go.jp/e/search/myuse/use0303/index.htm

[2] Schedule, Ministry of Internal Affairs and Communications, http://www.soumu.go.jp/joho_tsusin/whatsnew/digital-broad/when_en.html

[3] Announcement of channel plan for terrestrial digital TV broadcasting, Ministry of Internal Affairs and Communications (Japanese), http://www.soumu.go.jp/s-news/2008/080331_11.html

[4] Cable Television Broadcast Law (Japanese), http://law.e-gov.go.jp/htmldata/S47/S47F04001000040.html

[5] STD-013-2.0, “Transmission System for MDU”, Japan Cable Television Engineering Association (JCTEA) (Japanese), http://www.catv.or.jp/jctea/

[6] ITU-T Rec.J.112 “Transmission systems for interactive cable television services”

[7] ITU-T Rec.J.122 “Second-generation transmission systems for interactive cable television services – IP cable modems”

[8] ITU-T Rec. J.222.1 “Third-generation transmission systems for interactive cable television services – IP cable modems: Physical layer specification”

Appendix IV - Priority Mapping

Priority mapping recommended by IEEE 802.1D (sub-clause 7.7.3) are presented in Table IV-1.

Table IV-1: Recommended Flow Priority to Priority Queue Mappings according to 802.1D

		Number of Available Traffic Classes							
		1	2	3	4	5	6	7	8
User Priority	0 (default)	0	0	0	1	1	1	1	2
	1	0	0	0	0	0	0	0	0
	2	0	0	0	0	0	0	0	1
	3	0	0	0	1	1	2	2	3
	4	0	1	1	2	2	3	3	4
	5	0	1	1	2	3	4	4	5
	6	0	1	2	3	4	5	5	6
	7	0	1	2	3	4	5	6	7