Filed on behalf of: AX Wireless, LLC

Entered: November 17, 2023

UNITED STATES PATENT AND TRADEMARK OFFICE

BEFORE THE PATENT TRIAL AND APPEAL BOARD

INTEL CORPORATION,
Petitioner,

v.

AX WIRELESS,
Patent Owner.

Case IPR2023-01137
Patent 10,291,449

PATENT OWNER'S
PRELIMINARY RESPONSE

TABLE OF CONTENTS

I. Introduction 1

II. Background 1

A. The '449 Patent (INTEL-1001) 1

B. Person of Ordinary Skill in the Art 2

C. Claim Construction 3

III. Intel's Petition Fails Because July 2005 WWiSE (INTEL-1006) Was Not a Prior-Art Printed Publication 3

IV. The Claims Would Not Have Been Obvious Over Hansen in View of July 2005 WWiSE, or in Further View of Choi (Grounds 1-2) 11

A. Overview of the Art and the Combination 13

1. Hansen (INTEL-1005) 13

2. July 2005 WWiSE (INTEL-1006) 18

3. TGn Sync Proposal (INTEL-1012) 20

4. Choi (INTEL-1008) 21

5. Intel's Hansen and July 2005 WWiSE Combination 21

B. Intel's POSA Would Not Have Made the Proposed Hansen and July 2005 WWiSE Combination 24

1. Intel Ignores the Range Capabilities of Hansen and the Differences in Range Capabilities Between Hansen and July 2005 WWiSE 25

2. Intel Cherry-Picks One Feature Out of July 2005 WWiSE While Failing to Consider the Prior Art References for All Their Teachings 34

3. Intel Arrives at the Claimed OFDM Symbol Ordering Only Through Hindsight 39

4. Intel Fails to Provide Any Rational Reasons to Combine Hansen with July 2005 WWiSE as in the Petition 44

C. The Addition of Choi Does Not Overcome the Flaws in the Combination of Hansen and July 2005 WWiSE.....56

V. The Board Should Exercise Discretion to Deny Institution Under 35 U.S.C. § 314 and *Fintiv* 58

A. Factor 1 (Stay) Favors Denial 58

B. Factor 2 (Trial Date Proximity) Strongly Favors Denial 59

C. Factor 3 (Investment) Strongly Favors Denial.....61

D. Factor 4 (Overlap) Undisputedly and Strongly Favors Denial 62

E. Factor 5 Undisputedly Favors Denial 63

F. Factor 6 (Other) Favors Denial 63

VI. Conclusion 64

TABLE OF AUTHORITIES

Page(s)

CASES

Acceleration Bay, LLC v. Activision Blizzard Inc.,
908 F.3d 765 (Fed. Cir. 2018) 3, 4, 8, 9

In re Anova Hearing Labs, Inc.,
809 F. App'x 840 (Fed. Cir. 2020) 33

Apple Inc. v. Fintiv, Inc.,
IPR2020-00019, Paper 11 (Mar. 20, 2020) 61

Chemours Co. FC, LLC v. Daikin Indus., Ltd.,
4 F.4th 1370 (Fed. Cir. 2021) 34

CommScope Techs. LLC v. Dali Wireless, Inc.,
IPR2022-01242, Paper 23 (Feb. 27, 2023) 63

Cook Grp. Inc. v. Boston Sci. Scimed, Inc.,
809 F. App'x 990 (Fed. Cir. 2020) 52

In re Cronyn,
890 F.2d 1158 (Fed. Cir. 1989) 8

In re Dembiczak,
175 F.3d 994 (Fed. Cir. 1999) 11

Harmonic Inc. v. Avid Tech., Inc.,
815 F.3d 1356 (Fed. Cir. 2016) 7, 33, 44, 53

Henny Penny Corp. v. Frymaster LLC,
938 F.3d 1324 (Fed. Cir. 2019) 37

Kinetic Concepts, Inc. v. Smith & Nephew, Inc.,
688 F.3d 1342 (Fed. Cir. 2012) 39, 50

Koninklijke KPN N.V. v. Telefonaktiebolaget LM Ericsson,
No. 2:21-CV-00113-JRG, (E.D. Tex. July 7, 2022).....58

In re Lister,
583 F.3d 1307 (Fed. Cir. 2009) 9

MyPort, Inc. v. Samsung Elecs. Co.,
No. 2:22-CV-00114-JRG, (E.D. Tex. June 13, 2023) 58

Provisur Techs., Inc. v. Weber, Inc.,
No. 2021-1851, 2022 WL 17688071 (Fed. Cir. Dec. 15, 2022) 37

Rovalma, S.A. v. Bohler-Edelstahl GmbH & Co. KG,
856 F.3d 1019 (Fed. Cir. 2017) 48

Samsung Elecs. Co. v. Infobridge Pte. Ltd.,
929 F.3d 1363 (Fed. Cir. 2019) .....*passim*

Smartmatic USA Corp. v. Election Sys. & Software, LLC,
IPR2019-00527, Paper 32 (Aug. 5, 2020) 33, 34, 44, 53

South-Tek Sys., LLC v. Eng'd Corrosion Sols., LLC,
748 F. App'x 1003 (Fed. Cir. 2018) 33

SRI Int'l, Inc. v. Internet Sec. Sys., Inc.,
511 F.3d 1186 (Fed. Cir. 2008) 4, 5, 7, 11

St. Jude Med., LLC v. Snyders Heart Valve LLC,
977 F.3d 1232 (Fed. Cir. 2020) 49, 55

Teleflex, Inc. v. Ficosa N. Am. Corp.,
299 F.3d 1313 (Fed. Cir. 2002) 44

TQ Delta, LLC v. Cisco Sys., Inc.,
942 F.3d 1352 (Fed. Cir. 2019) 12, 26

Trivascular, Inc. v. Samuels,
812 F.3d 1056 (Fed. Cir. 2016) 34

University of Strathclyde v. Clear-Vu Lighting LLC,
17 F.4th 155 (Fed. Cir. 2021) 40

WBIP, LLC v. Kohler Co.,
829 F.3d 1317 (Fed. Cir. 2016) 12

Zhuhai Cosmx Battery Co. v. Ningde Amperex Tech. Ltd.,
IPR2023-00587, Paper 12 (Sept. 22, 2023) 59

STATUTES

35 U.S.C. § 314 ..... 57, 58, 63

Exhibit List

Exhibit	Description
2001	Declaration of Zygmunt Haas, Ph.D. ("Haas" or "AXW-2001")
2002	*Curriculum Vitae* of Zygmunt Haas, Ph.D. ("AXW-2002")
2003	Institute of Electrical & Electronics Engineers ("IEEE"), *IEEE Standards Association – Documents 802.11* (Oct. 10, 2023), https://mentor.ieee.org/802.11/documents (excerpted) ("AXW-2003")
2004	IEEE, *IEEE Standards Association – Documents 802.11: Working Group* (Oct. 8, 2023), https://mentor.ieee.org/802.11/documents?is_dcn=DCN%2C%20Title%2C%20Author%20or%20Affiliation&is_group=0000 (screenshot excerpts) ("AXW-2004")
2005	IEEE, *IEEE Standards Association – Documents 802.11: TGn Working Group (inactive)* (Sept. 20, 2023), https://mentor.ieee.org/802.11/documents?is_group=000n (excerpted) ("AXW-2005")
2006	IEEE 802.11 Working Group of the 802 Committee, *IEEE P802.11n™/D1.0, Draft Amendment to STANDARD [FOR] Information Technology-Telecommunications and information exchange between systems-Local and Metropolitan networks-Specific requirements-Part 11: Wireless LAN Medium Access Control (MAC) and Physical Layer (PHY) specifications: Enhancements for Higher Throughput* (Mar. 2006) ("AXW-2006")
2007	IEEE, *IEEE Standards Association – Documents 802.11 (no search terms)* (Sept. 22, 2023), https://mentor.ieee.org/802.11/documents ("AXW-2007")
2008	IEEE, *IEEE Standards Association – Documents 802.11 (all groups; extended range activity)* (Sept. 20, 2023), https://mentor.ieee.org/802.11/documents?is_dcn=extended range ("AXW-2008")

Exhibit	Description
2009	IEEE, *IEEE Standards Association – Documents 802.11: TGn Working Group (inactive; range search)* (Sept. 20, 2023), https://mentor.ieee.org/802.11/documents?is_dcn=range&is_group=000n ("AXW-2009")
2010	IEEE, *IEEE Standards Association – Documents 802.11: TGn Working Group (inactive; extended range activity)* (Sept. 20, 2023), https://mentor.ieee.org/802.11/documents?is_dcn=extend&is_group=000n ("AXW-2010")
2011	IEEE, *IEEE Standards Association – Documents 802.11 (all groups; extended and range search activity)* (Oct. 9, 2023), https://mentor.ieee.org/802.11/documents?is_dcn=extended AND range ("AXW-2011")
2012	IEEE, *IEEE Standards Association – Documents 802.11 (all groups; range search activity)* (Oct. 10, 2023), https://mentor.ieee.org/802.11/documents?is_dcn=range (excerpted) ("AXW-2012")
2013	Bruce Kraemer & Adrian Stephens, *TGn Proposed Draft Revision Notice* (Doc. No. IEEE 802.11-06/1061r0) (July 18, 2006), https://view.officeapps.live.com/op/view.aspx?src=https%3A%2F%2Fmentor.ieee.org%2F802.11%2Fdcn%2F06%2F11-06-1060-00-000n-tgn-draft-revision-with-additions-and-deletions.ppt&wdOrigin=BROWSELINK ("AXW-2013")
2014	Gérald Chouinard, *Bringing broadband access to rural and remote areas: The Canadian Experience*, ITU NEWS (commem. ed. 3) (Apr. 2006) ("AXW-2014" or "ITU News")
2015	Matthew S. Gast, *802.11 Wireless Networks: The Definitive Guide* (2d ed. 2005) ("AXW-2015" or "Gast")

Exhibit	Description
2016	Syed Aon Mujtaba, *TGn Sync Response to Questions* (Doc. No. IEEE 802.11-05/182r2) (Mar. 16, 2005), https://view.officeapps.live.com/op/view.aspx?src=https%3A%2F%2Fmentor.ieee.org%2F802.11%2Fdcn%2F05%2F11-05-0182-02-000n-tgnsync-response-to-atlanta-questions.ppt&wdOrigin=BROWSELINK ("AXW-2016")
2017	Third Amended Docket Control Order, *AX Wireless LLC v. Dell Inc.*, No. 2:22-cv-00277 (E.D. Tex. Oct. 23, 2023), ECF No. 136 ("AXW-2017")
2018	Third Amended Docket Control Order, *AX Wireless LLC v. Lenovo Grp. Ltd.*, No. 2:22-cv-00280 (E.D. Tex. Oct. 31, 2023), ECF No. 130 ("AXW-2018")
2019	RESERVED
2020	*Time to Milestones – Judge Robert W. Schroeder, III: Case Filing Date: On or After Jan. 1, 2008*, Docket Navigator ("AXW-2020")
2021	Civil Docket, *AX Wireless LLC v. Dell Inc.*, No. 2:22-cv-00277 (E.D. Tex.) (through Nov. 15, 2023) ("AXW-2021")
2022	Civil Docket, *AX Wireless LLC v. Lenovo Grp. Ltd.*, No. 2:22-cv-00280 (E.D. Tex.) (through Nov. 15, 2023) ("AXW-2022")
2023	Defendants' P.R. 3-3 Invalidity Contentions and Ineligibility Contentions, *AX Wireless LLC v. Dell Inc. & HP Inc.*, Nos. 2:22-cv-00277, 2:22-cv-00279 (E.D. Tex. Jan. 23, 2023 [served]) ("AXW-2023")
2024	RESERVED

Exhibit	Description
2025	R. Kennedy, *Amendment to IEEE Standard 802.11-2007 (Project No. P802.11af): Standard for Information Technology - Telecommunications and Information Exchange Between Systems - Local and Metropolitan Area Networks - Specific Requirements - Part 11: Wireless LAN Medium Access Control (MAC) and Physical Layer (PHY) Specifications; Amendment: TV White Spaces Operation* (PAR Request Oct. 2, 2009; PAR Approval Dec. 9, 2009) ("AXW-2025")
2026	Bruce Kraemer, *Amendment to IEEE Standard 802.11-2007 (Project No. P802.11ah): Standard for Information Technology - Telecommunications and Information Exchange Between Systems - Local and Metropolitan Area Networks - Specific Requirements - Part 11: Wireless LAN Medium Access Control (MAC) and Physical Layer (PHY) Specifications; Amendment: Sub 1 GHz License-Exempt Operation* (PAR Request July 26, 2010; PAR Approval Sept. 30, 2010) ("AXW-2026")
2027	Xuemei Ouyang et al., *Optimal Antenna Diversity Combining for IEEE 802.11A System*, 48 IEEE TRANSACTIONS CONSUMER ELECS. 738 (Aug. 2002) ("AXW-2027")
2028	Cenk Kose & Bruce Edwards, *WWiSE Proposal: High Throughput Extension to the 802.11 Standard* (Doc. No. IEEE 802.11-04/0886r6) (Jan. 6, 2005), https://www.google.com/url?sa=t&rct=j&q=&esrc=s&source=web&cd=&ved=2ahUKEwjJq5fyur-CAxUROUQIHan7D4IQFnoECBkQAQ&url=https%3A%2F%2Fmentor.ieee.org%2F802.11%2Fdcn%2F05%2F11-05-0149-00-000n-wwise-proposal-high-throughput-extension-to-802-11-standard.doc&usg=AOvVaw2ryBNHlH79Ugg8pE4IzPVE&opi=89978449 ("AXW-2028" or "March 2005 WWiSE Proposal")
2029	Mohammad Hossein Manshaei & Thierry Turletti, *Simulation-Based Performance Analysis of 802.11a Wireless LAN*, PROC. INT'L SYMP. TELECOMMS. 758 (Aug. 2003) ("AXW-2029")

Exhibit	Description
2030	IEEE, *IEEE P802.11 – Task Group N – Meeting Update: Status of Project IEEE 802.11n: Standard for Enhancements for Higher Throughput*, https://www.ieee802.org/11/Reports/tgn_update.htm (printed 11/10/2023) ("AXW-2030")

I. Introduction

Intel's Petition is riddled with holes and skipped over details. This Preliminary Response shines a light on these missing pieces and demonstrates that institution should be denied. The Petition is based on alleged prior art (July 2005 WWiSE) that a person of ordinary skill conducting a reasonably diligent search would not have found because the repository it was in was not indexed in any meaningful way. Even assuming that July 2005 WWiSE was publicly available (and it was not), the hindsight-driven Petition blindly combines Hansen and July 2005 WWiSE and asserts all limitations are met, but completely ignores the details in each reference as a whole. When their teachings are properly considered, it becomes apparent that a person of ordinary skill would *not* combine these two references as the Petition posits. Instead of providing rational reasons for the combination, the Petition resorts to hindsight. Institution should be denied.

II. Background

A. The '449 Patent (INTEL-1001) [1]

The '449 patent relates to variable header repetition in a wireless OFDM network. INTEL-1001, Title; *see also id.* Abstract, 1:26-32, 2:12-3:61, 12:37-45. The background of the patent explains that "[c]onventional multi-user

[1] For consistency, Patent Owner will use Petitioner Intel's exhibit citation format.

communications system use frame-based (or packet-based) transmission to communicat[e] between two or more users over a shared channel based on Orthogonal Frequency Division Multiplexing (OFDM)—(OFDM is also sometimes referred to as multicarrier modulation.) A packet is usually formed by a preamble, header, and payload, and transmitted using time-sharing or contention-based media access methods." *Id.* 1:34-43. Various communication systems may form header information differently. As the patent notes, as an example, each OFDM symbol in G.9960 includes multiple header information blocks repeated in frequency. *See id.* 1:54-60. Use of multiple OFDM symbols could extend repetition further. *See id.* Additionally, more than one header field with different header information may be used. *See id.* 2:37-39. Figure 1 of the '449 patent illustrates "various header repetition schemes" consistent with the teachings of the patent. *Id.* 2:33-41; *see also id.* 5:50-6:13. The '449 patent describes various ways of communicating a header repetition scheme in a system so that various nodes are aware of the scheme used. *See, e.g.*, *id.* 2:47-3:61.

B. Person of Ordinary Skill in the Art

Solely for purposes of this Preliminary Response, Patent Owner does not contest the level of ordinary skill in the art proposed by Intel, but reserves the right to do so. Pet. 9.

C. Claim Construction

No construction is necessary at this time. As explained below, Intel failed to meet its burden under its proposed "ordinary and customary meanings." Pet. 9.

III. Intel's Petition Fails Because July 2005 WWiSE (INTEL-1006) Was Not a Prior-Art Printed Publication

Intel alleges that July 2005 WWiSE, along with thousands of other such submissions, was "accessible to the public" because it was allegedly available on a now-defunct FTP[2] site ("ftp.wirelessworld.com") via an associated and also now-defunct website, "http://802wirelessworld.com," until mid-2007, and after that, was "available to interested members of the public through Mentor." Pet. 2-4.

Intel failed to meet its burden of demonstrating public accessibility at either website. *Samsung Elecs. Co. v. Infobridge Pte. Ltd.*, 929 F.3d 1363, 1369 (Fed. Cir. 2019). Intel's arguments notwithstanding, it is *not* enough for a document to be posted somewhere on the internet. "'[P]ublic accessibility' requires more than technical accessibility." *Acceleration Bay, LLC v. Activision Blizzard Inc.*, 908 F.3d

[2] Unlike websites, FTP (file transfer protocol) sites by themselves allow one to navigate a directory structure, upload or download files, and little else. AXW-2001 ¶68 n.4.

765, 773 (Fed. Cir. 2018).[3] The analysis in this case "focuse[s] on whether an interested skilled artisan, using reasonable diligence, would have found [July 2005 WWiSE] on the [alleged] website[s]" and ftp site. *See id*. In *Acceleration Bay*, for example, "although [the reference] was indexed by author and year, it was not *meaningfully* indexed such that an interested artisan exercising reasonable diligence would have found it, which is a proper consideration under [Federal Circuit] precedent." *Id*. at 774 (emphasis in original); *SRI Int'l, Inc. v. Internet Sec. Sys., Inc*., 511 F.3d 1186, 1196-97 (Fed. Cir. 2008) (posting a paper to a public FTP site does not render the paper a "printed publication").

To be clear, July 2005 WWiSE was not a published standard, a draft standard, or even a working draft. It was merely one of many thousands of submissions to one of many dozens of working groups addressing the 802.11 standard. AXW-2003 (898 pages of 100 submissions per page in 802.11, with roughly 21,700 of those submissions before the relevant 2009 date); AXW-2004 (showing *over 100* working groups addressing the 802.11 standard). The TGn working group *alone* received approximately 4,600 submissions before the relevant date in 2009. AXW-2005 (excerpt showing a search for all submissions to the TGn working group results in

[3] Unless otherwise stated, all emphases herein are added and internal quotation marks, citations, and footnotes are omitted.

46 pages of results, with 100 submissions on each page except the final page 46). Intel failed to establish that the reasonably diligent POSA looking for extended-range teachings would have found July 2005 WWiSE among all of these documents.

As in *Samsung*, there is no evidence that anyone outside the working group regularly visited the alleged sites and accessed July 2005 WWiSE. *Samsung*, 929 F.3d at 1371-72 (The "JCT-VC members were part of ongoing, collaborative efforts to draft the WD4 reference," which was therefore not a printed publication). And here, July 2005 WWiSE was not even a working draft standard as in *Samsung*. Rather, it was merely one of myriad submissions for the working group to debate whether to incorporate into a working draft—further weighing against public availability. *See SRI*, 511 F.3d at 1197 ("The Live Traffic paper" was not a printed publication because it "was not a finished thesis" that was "complete and ready for public consumption," "but was posted on the FTP server solely to facilitate peer review in preparation for later publication."). And tellingly, the extended-range portions cited by Intel were *not* incorporated into 802.11n standard.

Intel never explains why a reasonable POSA would have played archeologist with Intel's alleged sites, painstakingly combing through thousands upon thousands of submissions of dubious relevancy, manually reading rejected submissions and proposals in search of a portion of an extended-range feature omitted from the draft and final 802.11n standard. *See* AXW-2006 (draft 802.11n standard); INTEL-1017

(802.11n adopted standard); AXW-2001 ¶90. A POSA would not have done so. AXW-2001 ¶69. In short, "there [is] no evidence that such a person would have located the [July 2005 WWiSE reference] on the website[s] by exercising reasonable diligence." *Samsung*, 929 F.3d at 1367, 1369-73.

First, Intel fails to properly allege, much less demonstrate, public availability at the defunct wirelessworld. Intel does not allege that a POSA exercising reasonable diligence in seeking information regarding extending the range of a header field in a system such as Hansen's (*see* Pet. 20-25) would have visited those sites at all. Pet. 2. Even assuming the reasonably diligent POSA would have visited the sites, the POSA would *not* have found July 2005 WWiSE. *Id.* Intel does not allege that the wirelessworld sites were indexed or searchable at all, much less "meaningfully" as required (such as by subject matter), or provide any other explanation how a reasonably diligent POSA would have found July 2005 WWiSE. *Id.* 2-3.

Intel's arguments regarding the Mentor site fail for similar reasons. Again, Intel fails to allege a reasonably diligent POSA would have visited Mentor to search for extended-range techniques or provide any evidence that any outsiders regularly visited Mentor or accessed the July 2005 WWiSE reference. Pet. 3. And even assuming (as did Intel) that a POSA would have visited the Mentor site, Intel alleges only that the "[e]ntries in Mentor were and remain searchable by year, task group,

title, or other parameters." *Id.*; INTEL-1007 ¶22 (repeating conclusory attorney argument).[4] But there is no evidence that Mentor was searchable at the relevant time, other than Dr. Lansford's conclusory (and thus insufficient) statement that it was. *Harmonic Inc. v. Avid Tech., Inc.*, 815 F.3d 1356, 1363 (Fed. Cir. 2016) ("[Petitioner's] expert testimony in support of this theory is equally unavailing, adding nothing beyond the conclusory statements in [the] petition."). All of Dr. Lansford's "extractions" were performed in 2023. INTEL-1007 ¶¶21-22. He states that he previously downloaded files, but he never testified that he performed a search of any type at the relevant time. *Id*.

And even assuming *arguendo* that the Mentor site was never upgraded in the intervening *sixteen years* and possessed the same search capability then as it does today, July 2005 WWiSE was still not "*meaningfully* indexed" as required. *Samsung*, 929 F.3d at 1369. Intel does not allege that Mentor was searchable by subject matter because it is not. Pet. 3; INTEL-1007 ¶22. Rather, Intel alleges that

---

[4] For good reason, Intel does not argue that July 2005 WWiSE was presented to the TGn working group and that would have been sufficient. *See Samsung*, 929 F.3d at 1371-72 (distribution to 250-member working group of skilled artisans was insufficient); *SRI*, 511 F.3d at 1196-97 (distribution to the review committee was insufficient).

Mentor may be filtered by year and/or working group, and that the DCN (Document Control Number), Title, and Author/Affiliation fields may be searched. AXW-2007 (showing prompts in search field); AXW-2004 (showing the well over 100 different working groups that may be selected); *see also* Pet. 3; INTEL-1007 ¶21. That is not enough for public accessibility.

Even today, Mentor lacks any ability to search the contents of the posted documents. Rather, Dr. Lansford asserts that July 2005 WWiSE could have been found searching in "Task Group N (TGn) with Document Control Number (DCN) 149," and testifies that is sufficient for public availability. INTEL-1007 ¶¶23-24 (discussing Appendix E, which starts at page 302 of the exhibit). Not so. Dr. Lansford merely established that POSAs "lacked a reasonable way of locating the [July 2005 WWiSE] reference *unless they already knew what to look for*," namely, DCN 149, which is insufficient to show public availability. *Samsung*, 929 F.3d at 1372 (affirming the Board's finding). Searching by year, DCN, or author/affiliation, as Intel suggests, is insufficient, as it "bears no relationship to the subject" matter. *Acceleration Bay*, 908 F.3d at 774 (quoting *In re Cronyn*, 890 F.2d 1158, 1161 (Fed. Cir. 1989)).

Mentor also allows for a title search, but that is not enough in this case. This is not a situation like *Lister*, where the manuscript's title was "Advanced Handicap Alternatives for Golf" and record evidence showed that "[a] reasonably diligent

researcher" that was "interested in ways to expedite the game of golf and make it easier for casual players" "would have searched for 'golf' in combination with 'handicap'" and found the reference-at-issue. *In re Lister*, 583 F.3d 1307, 1315-16 (Fed. Cir. 2009).

Here, unlike *Lister*, a POSA seeking to extend the range of the 802.11 standard would ***not*** have found July 2005 WWiSE, but only other documents with, for example, the string "extended range" in the title, DCN, or author fields. *See* AXW-2008 (search for extended range all groups, without quotes, finds results only with that exact string). Likewise, a search just for "range" or "extend" provides other documents, but not July 2005 WWiSE. AXW-2009, 2010. Mentor does not even provide for Boolean "combination" searches as in *Lister*. *See* AXW-2011 (a search for extend AND range returns no results).

Even worse, the above search for "range" illustrates another deficiency in Mentor's search capability – it simply looks for the entered string anywhere in the Title, Author/Affiliation, or DCN field rather than just the title field. *See, e.g.*, AXW-2012, 9 ("John Benko (Orange Labs)"); *see also* INTEL-1007 ¶¶22-23 (e.g., searching for DCN 149 by entering "149" in the same field). In sum, Mentor "was not *meaningfully* indexed such that an interested artisan exercising reasonable diligence would have found" the July 2005 WWiSE reference. *Acceleration Bay*, 908 F.3d at 774; AXW-2001 ¶69.

Intel also argues that a POSA "would have been aware of the proposals made to IEEE by WWiSE." Pet. 3 (citing INTEL-1021, INTEL-1027, INTEL-1035-1037). Intel's witnesses chose not to support Intel's attorney argument on this point, and Intel's cited exhibits merely illustrate that there were multiple competing proposals. None of these exhibits mention July 2005 WWiSE or the extended range capability Intel seeks to add to Hansen. *See, e.g.*, INTEL-1021, 189 (listing the MIMOT, TGnsync, and WWiSE proposals, but not mentioning July 2005 WWiSE or any range extension in *any* WWiSE document). In short, Intel failed to provide any evidence that a POSA would have been aware that the particular WWiSE document asserted as prior art here, i.e., INTEL-1006, much less that it contains extended-range teachings.

Finally, Intel does *not* contend that a POSA seeking range-extending techniques would have searched Mentor for the string "WWiSE." For good reason: first, there is no evidence linking "WWiSE" to the extended-range subject matter, other in the broadest way that applies to all of the thousands upon thousands of other documents in the 802.11 section of Mentor. Second, searching on "WWiSE" returns over 70 results. INTEL-1007, 729-33 (App'x K). There is no evidence that a reasonably diligent POSA would have combed through these 70 results searching for extended-range techniques. Perhaps that POSA would have searched for the draft 802.11n standard at the relevant time (i.e., 2009), but, like Hansen, the TGn

working group ***did not*** add Intel's proposed extended-range to 802.11n despite being aware of WWiSE. AXW-2001 ¶90. Notably, the alleged sites do *not* include the adopted or draft 802.11n standard. *See*, *e.g.*, AXW-2013, 2 (announcing the posting of a draft revision in the "members draft area"); INTEL-1038, 21 (explaining draft standards are in a private section of the wirelessworld website). This is because, like the sites in *SRI* and *Samsung*, they were intended "solely to facilitate peer review in preparation for later publication" of the final draft standard. *SRI*, 511 F.3d at 1197; *Samsung*, 929 F.3d at 1371-72.

For the above reasons, Intel failed to demonstrate public accessibility of July 2005 WWiSE—and thus all of its proposed grounds fail.

IV. The Claims Would Not Have Been Obvious Over Hansen in View of July 2005 WWiSE, or in Further View of Choi (Grounds 1-2)

Intel's obviousness arguments also fail even assuming *arguendo* that July 2005 WWiSE was publicly accessible. Rather than performing a proper obviousness analysis, Intel launches headlong "into the tempting but forbidden zone of hindsight." *In re Dembiczak*, 175 F.3d 994, 998 (Fed. Cir. 1999). Intel simply ignores the numerous technical details of Hansen and July 2005 WWiSE that demonstrate that a POSA *would not* have been motivated to combine the two to arrive at the claimed solution. Instead of considering these details and providing any evidence that a POSA would have similarly ignored or overcome the challenges they posed and still have been motivated to combine the references despite them, Intel

"use[s] the challenged patent as a roadmap to reconstruct the claimed invention using disparate elements from the prior art—i.e., the impermissible *ex post* reasoning and hindsight bias that *KSR* warned against." *TQ Delta, LLC v. Cisco Sys., Inc.*, 942 F.3d 1352, 1361 (Fed. Cir. 2019).

Intel starts from the flawed premise that a POSA wanting to extend range would resort to repeating bits—one of the least efficient approaches available to a POSA in 2009. AXW-2001 ¶¶60-61. There are numerous techniques to improve the range of a wireless system, such as MIMO, beamforming, changing modulation, lower frequency, or changing the code rate. *See id.* ¶64. And, as explained below, Hansen already incorporated a number of these. Indeed, the 802.11ah standard included a feature called Wi-Fi HaLow that uses 900 MHz bands to provide extended-range WiFi, which had nothing to do with repeating bits. AXW-2001 ¶53; AXW-2014 (ITU News) 5. Intel considers none of this, instead taking a small and incomplete portion of the Extended Range mode from July 2005 WWiSE—an approach that was ***rejected*** by the TGn working group and never adopted into 802.11n—and forcing it into Hansen without any rational basis. AXW-2001 ¶90. Intel never explains why a POSA "would have plucked" the rejected July 2005 WWiSE repeated header "out of the sea of prior art" to combine with Hansen. *WBIP, LLC v. Kohler Co.*, 829 F.3d 1317, 1337 (Fed. Cir. 2016). There was no good reason to, absent hindsight.

A. Overview of the Art and the Combination

1. Hansen (INTEL-1005)

Hansen explains that a task group was chartered to define a new 802.11 standard: 802.11n. INTEL-1005 [0008]; *see also* AXW-2001 ¶90 (noting that the 802.11n standard was not ratified until 2009 and citing INTEL-1017). The new 802.11n standard was to improve upon legacy 802.11 standards "to achieve throughput rates beyond 100 Mbits/s." INTEL-1005 [0008]. Hansen notes that "[a] plurality of proposals … emerg[ed] as candidates for incorporation in … 802.11n," including "proposals from, the worldwide spectrum efficiency (WWiSE) group, and TGn Sync." *Id.* [0009], [0033].[5] Hansen notes that "[c]urrent proposals from TGn Sync may not provide a mechanism to support greenfield access." *Id.* [0033]. "Greenfield" mode or operation refers to 802.11n devices working only with other 802.11n devices, not legacy 802.11 devices. AXW-2001 ¶¶78, 91. Addressing that perceived shortcoming of TGn Sync proposals, Hansen is directed "to a method and system for compromise greenfield preambles for 802.11n." INTEL-1005 [0007].

---

[5] Hansen refers to "[a] plurality of proposals" (e.g., *id.* [0009]) throughout without ever identifying any particular TGn Sync or WWiSE proposal by name or date, and does not incorporate by reference any of these external proposals—WWiSE, TGn Sync, or any of the others—into its disclosure.

Describing "greenfield" operation, Hansen explains that "WLAN devices that are compatible with IEEE 802.11n and communicate with other IEEE 802.11n compatible WLAN devices in an IEEE basic service set (BSS) of which no legacy IEEE 802.11 WLAN devices are currently members may be capable of communicating in a greenfield access mode." *Id.* [0032]. Hansen continues, "[w]hen utilizing greenfield access, communications between the WLAN devices may utilize capabilities specified in IEEE 802.11n that may not be accessible to legacy WLAN devices." *Id.* By contrast, "WLAN devices that are compatible with IEEE 802.11n, and that communicate with IEEE 802.11n compatible WLAN devices in an IEEE BSS, of which legacy IEEE 802.11 WLAN devices are currently members, may utilize mixed mode access." *Id.* In other words, modes of operation include "mixed mode," in which 802.11n devices and legacy 802.11 devices both exist, and "greenfield" mode, in which only 802.11n devices exist. AXW-2001 ¶91. If a WLAN has only 802.11n devices and not legacy devices, the WLAN does not need accommodations for legacy 802.11 devices. AXW-2001 ¶¶78, 91.

Describing potential benefits of greenfield mode, Hansen explains that

> [t]he utilization of greenfield access may reduce the portion of time required to transmit data due to overhead comprising preamble fields and header fields. This may enable higher data throughput rates to be achieved. This may further enable more robust transmission of data by enabling comparable data rates to be maintained while reducing the

> coding rate of encoded transmitted data. The reduction of the coding rate may enable comparable data rates to be maintained for transmission via RF channels characterized by lower SNR while still achieving desired target levels of packet error rates.

INTEL-1005 [0027]; *see also, e.g.*, *id.* [0072] (explaining "an increase of approximately 26% in the data rate" by "[e]limination of the legacy preamble"), [0073]-[0075]. In other words, Hansen posits that in greenfield mode, the overall data throughput can be increased by eliminating the unnecessary overhead of the legacy preamble and header, and can be more robust with only modest reductions in throughput. AXW-2001 ¶¶92-93.

Because TGn Sync proposals did not include a greenfield mode, Hansen proposes adopting the TGn Sync fields, but eliminating the legacy portions to create a greenfield mode. Hansen Figure 6a, relied on in the Petition's combination and depicted below, "shows exemplary training fields and header fields with trailing signal field for greenfield access for $N_{SS}>2$." INTEL-1005 [0087].

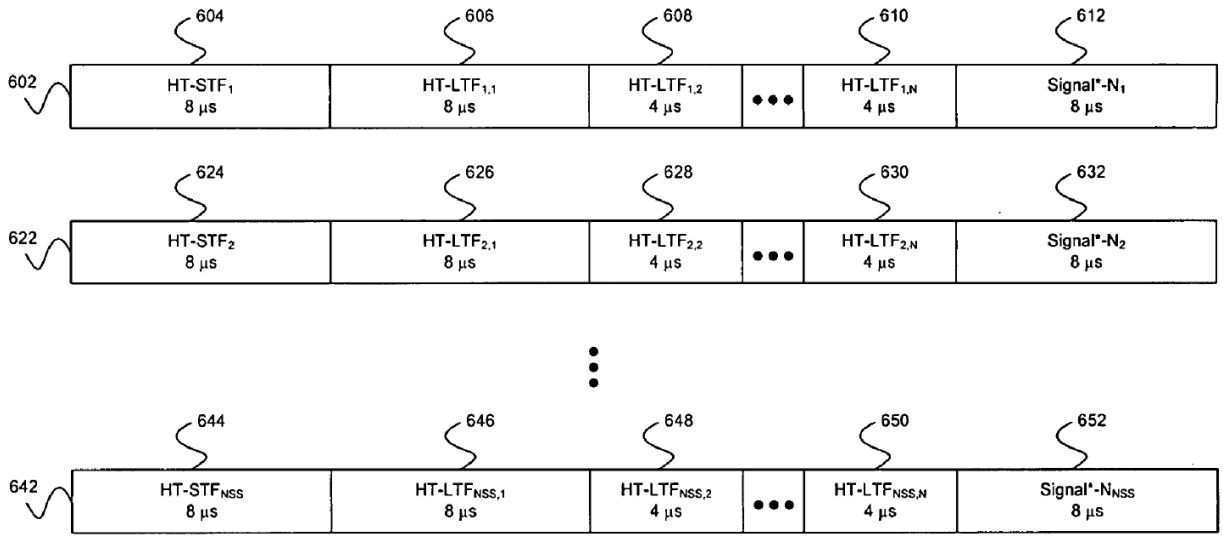

FIG. 6a

Hansen explains that "[t]he Signal*-N fields 612, 632, and 652 may be represented as shown in FIG. 4c." *Id.* Hansen Figure 4c "shows an exemplary HT-SIG header field for mixed mode access in accordance with a TGn Sync proposal." *Id.* [0067]. Thus, as depicted in Pet. 16 (copied below), Hansen adopts a TGn Sync proposal's HT-SIG header.

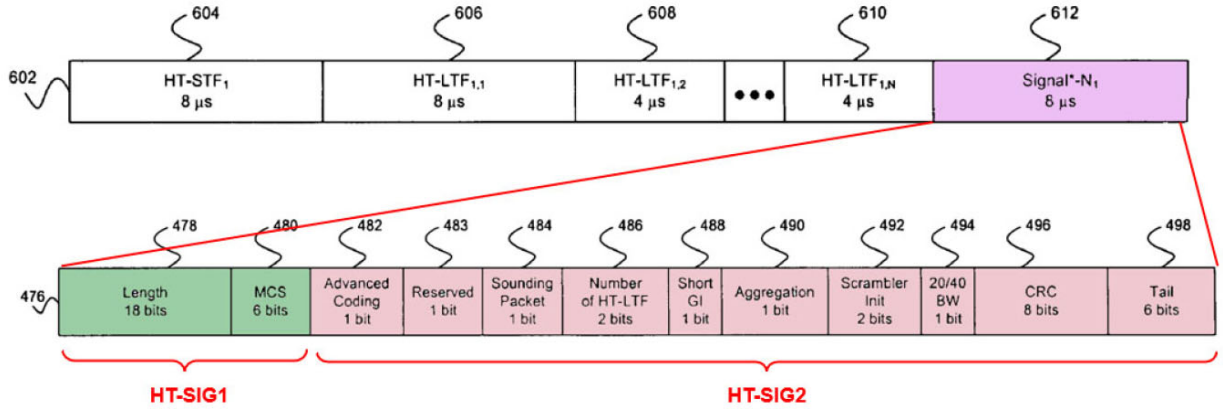

Hansen, Excerpt from Annotated Figure 6a (top); Figure 4c (bottom)

While not depicted above, Hansen's Figure 6a makes clear that its Signal*-N field (incorporating the TGn Sync HT-SIG field) would be transmitted from each antenna. *See* INTEL-1005 [0087], [0092], Fig. 6a; AXW-2001 ¶¶94, 102. As compared to Figure 4a, Figure 6a does not include an L-STF, L-LTF, or L-SIG field. These are "legacy" fields not needed in Hansen's greenfield mode. INTEL-1005 [0061], [0096]; AXW-2001 ¶¶91-94.

Hansen also describes an exemplary transceiver in which its TGn Sync greenfield preambles are used. *See* INTEL-1005 [0014]-[0015], [0037]-[0058]. Hansen's transceiver includes beamforming and MIMO capabilities. *See id.* [0041]-[0042], [0047], [0052]; AXW-2001 ¶¶96-102. As the Hansen Provisional explains:

> Smart antenna systems combine multiple antenna elements with a signal processing capability to optimize the pattern of transmitted signal radiation and/or reception in response to the communications medium environment. The process of optimizing the pattern of radiation is sometimes referred to as 'beamforming,' which may utilize linear array mathematical operations to increase the average signal to noise ratio (SNR) by focusing energy in desired directions.

INTEL-1011 [05]. Likewise, the Hansen Provisional explains that MIMO can be used for "data rate maximization" or "diversity maximization," but also that "hybrid adaptations" can be used. *Id.* [10]-[11]. The Hansen Provisional explains:

> Diversity maximization focuses on increasing the probability that a signal transmitted by a transmitting mobile terminal will be received at

> a receiving mobile terminal, and on increasing the SNR of received signals. In diversity maximization, multiple versions of the same signal may be transmitted by a plurality of antenna. The case in which a transmitting mobile terminal is transmitting the same signal via all of its transmitting antenna may be the pure spatial diversity case in which the aggregate data transfer rate may be equal to that of a single antenna mobile terminal.

Id. [11]. Hansen's transceiver incorporates aspects of both techniques. AXW-2001 ¶¶101-02.

2. July 2005 WWiSE (INTEL-1006)

July 2005 WWiSE is one of several proposals made in the TGn working group to be adopted as the 802.11n standard. *See, e.g.*, INTEL-1003 ¶80. This particular proposal was submitted in July 2005, despite bearing March 2005 date markers. *Compare* INTEL-1017, *with* INTEL-1013 (another WWiSE proposal, ostensibly from January 2005, and lacking INTEL-1017's "extended range" teachings). July 2005 WWiSE describes numerous aspects of the potential standard, including the MAC service, MAC frame formats, management frames, MAC functionality, frame exchanges, protection mechanisms, layer management, and the high throughput PHY specifications. *See, e.g.*, INTEL-1006, 5-12.

Notably, the extended range features that the Petition relies upon from July 2005 WWiSE were not incorporated into the 802.11n standard for which it was proposed. AXW-2001 ¶90. And contrary to Intel's assertion, Pet. 16, there are

numerous revisions between July 2005 WWiSE and the January 2005 WWiSE proposal beyond just the extended range header bits that the Petition relies upon. AXW-2001 ¶82.

July 2005 WWiSE defines one kind of PPDU as shown below.

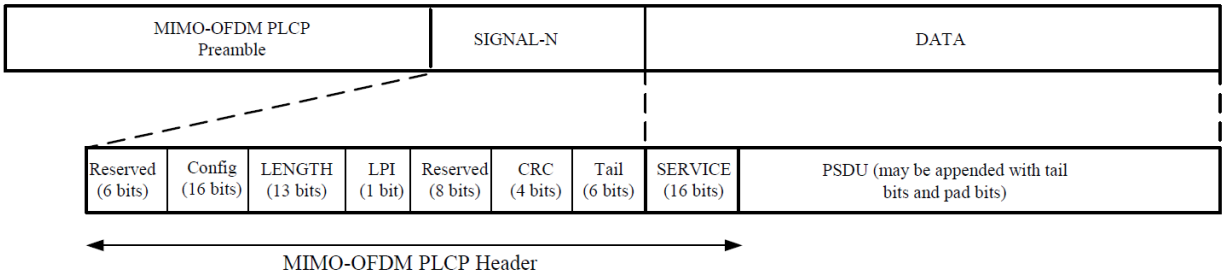

Figure 001 – PPDU frame format: Greenfield access in the 1TX (40 MHz) and 2TX (20 and 40 MHz) modes

INTEL-1006, 58. The preamble "is composed of a sequence of short and long training symbols." *Id.* The header "is composed of the SIGNAL-N field and the SERVICE field." *Id.* These are followed by potentially multiple MIMO-OFDM symbols of data, with tail and pad bits if necessary. *Id.* While the data may be sent with various modulation, *see, e.g.*, *id.* 61-63, for mandatory modes, the SIGNAL-N field is a single symbol and "shall be performed with QPSK modulation of the subcarriers of the first antenna and shall use convolutional coding at R = 1/2." *Id.* 70; *see also id.* 55; AXW-2001 ¶¶44 (explaining what QPSK modulation is), 81.

July 2005 WWiSE describes an optional Extended Range (ER) mode. That includes "ER Protection," which is "mandatory for NR and ER-capable STAs." INTEL-1006, 46-48. This protection is, at least in part, "[t]o mitigate the hidden node problem" introduced by the ER mode. *Id.* 46. The addition of messages that

can be received at a greater distance than others, and having only a subset of devices that can understand those messages, leads to a hidden node problem that can cause collisions over the air and costly retransmissions. AXW-2001 ¶¶65-66, 88. Further, an "ER-capable AP" must provide for an "ER beacon" frame with an ER-specific Basic Rate Set. INTEL-1006, 52. Additionally, the ER mode "is only used with the optional NTX-STBC modes (described in subclause 20.3.5.10) and only with rate-1/2 encoding using BPSK modulation." *Id.* 69; AXW-2001 ¶¶44 (explaining what BPSK modulation is), 84-85. The "NTX-STBC" modes refer to space-time block coding modes, which require the PHY to be able to use more transmit antennas than spatial streams, and to apply special coding to the streams. *See* INTEL-1006, 78-82; AXW-2001 ¶85. Finally, in ER mode, "SIG-N is composed of two consecutive MIMO-OFDM symbols," with the second being a frequency-permuted version of the first. INTEL-1006, 69; *see also* AXW-2001 ¶86.

3. TGn Sync Proposal (INTEL-1012)

Intel's identified grounds for challenging the claims are based on Hansen and July 2005 WWiSE for Ground 1, or with the addition of Choi for Ground 2. Pet. 4. Intel nonetheless improperly includes a TGn Sync Proposal under its "Combination Overview" heading, despite neither Hansen nor July 2005 WWiSE incorporating any TGn Sync Proposal by reference or otherwise including the complete contents of the portions Intel relies on. *See id.* 10, 12-14. While Intel asserts that the January

2005 TGn Sync proposal is the one "forming the basis of Hansen's discussion," Intel provides no basis for this aside from the relative dates of INTEL-1012 and the filing dates of applications related to Hansen. *See id.*

4. Choi (INTEL-1008)

Choi was filed in 2003, before the IEEE TGn Working Group began its work, which Intel's expert says was 2004. *See* INTEL-1003 ¶60. Consistent with that, Choi makes no mention of 802.11n, MIMO operation, or beamforming. AXW-2001 ¶104. Instead, Choi only mentions the legacy 802.11 a/b/g standards, none of which included MIMO operation. INTEL-1008 [0002]; AXW-2001 ¶¶104-05. In this context, Choi describes "a repetition coding scheme." INTEL-1008 [0001]; AXW-2001 ¶105.

5. Intel's Hansen and July 2005 WWiSE Combination

The challenged claims recite "a first packet type" and a "second packet type." INTEL-1001, cl. 1; AXW-2001 ¶106. In Intel's combination, the two packets are the NR Greenfield PPDU and the ER Greenfield PPDU, pictured below from the Petition:

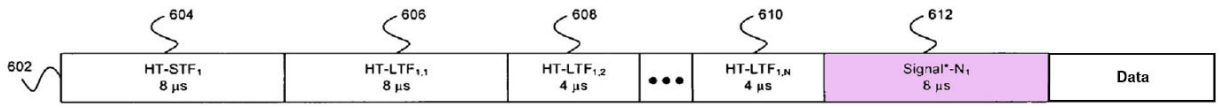

NR Greenfield PPDU ("*First Packet Type*")
(Combined Hansen Figure 3a and Excerpt from Figure 6a)

ER Greenfield PPDU ("*Second Packet Type*")
(Combined Hansen Figure 3a and Excerpt for Figure 6a
as modified by July 2005 WWiSE)

Pet. 29. Intel's combination PPDUs each start from Figure 6a of Hansen.[6] *See, e.g.*, Pet. 29-33. Hansen explains that in Figure 6a, "the Signal*-N field [is] represented as described in FIG. 4c." INTEL-1005 [0097]; AXW-2001 ¶108. The Signal*-N field is highlighted in purple above. Hansen Figure 4c "shows an exemplary HT-SIG header field for mixed mode access in accordance with a TGn Sync proposal." INTEL-1005 [0067]; AXW-2001 ¶¶93, 108.

The Petition follows Hansen in this regard, explaining that in its combination, the Signal*-N field is replaced by the Hansen Figure 4c header, as depicted below from the Petition:

---

[6] Intel's figures refer to Hansen Figure 3a only because Figure 6a omits the data field that Intel adds to the end of its PPDUs. *See* Pet. 30 & n.6; AXW-2001 ¶107.

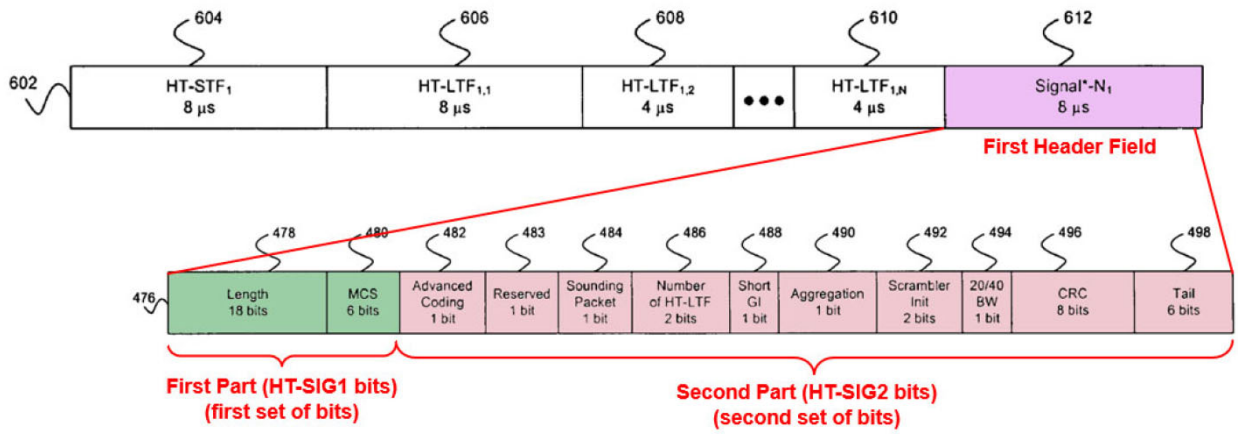

Excerpt of Hansen, Figure 6a (top); Figure 4c (bottom)

Pet. 31; *see also id*. 19-20, 29-33. Thus, in the combination, the Signal*-N field comprises 48 information bits split across two symbols with 24 information bits each. *See* Pet. 31-32; AXW-2001 ¶108. The combination's ER Greenfield PPDU "repeats the two parts of Hansen's Signal*-N header field" to form the "Long Signal*-N" highlighted in blue below.

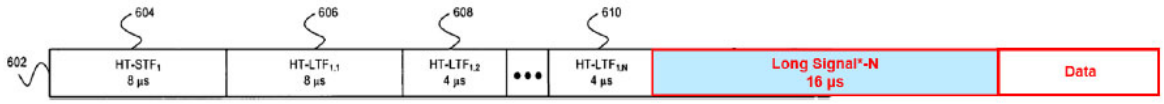

ER Greenfield PPDU
(Combined Hansen Figure 3a and Excerpt from Figure 6a, as modified by July 2005 WWiSE)

Pet. 19-20. According to Intel, that repetition would split the HT-SIG header field apart to insert one of the repeated symbols, as depicted below:

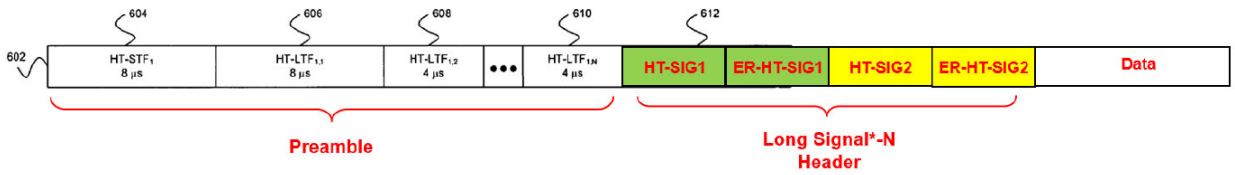

ER Greenfield PPDU

Pet. 49. As explained below, Intel's purported ER Greenfield PPDU is fashioned out of whole cloth using nothing but hindsight—and not described in any reference in the combination. AXW-2001 ¶¶111, 130.

B. Intel's POSA Would Not Have Made the Proposed Hansen and July 2005 WWiSE Combination

The Petition plucks just the repeated header of the Extended Range mode from July 2005 WWiSE, and blindly adds it to Hansen, without considering any of the details surrounding the combination. As explained below, Intel (1) ignores the range-enhancing features Hansen already has, as well as the differences between Hansen and July 2005 WWiSE; (2) cherry-picks the use of repeated headers from July 2005 WWiSE without considering how or why it is used; and (3) fails to recognize that in its proposed combination, a receiving device would not know whether it is receiving a normal range or extended range PPDU, and therefore would not be able to properly receive PPDUs. Considering these details—absent hindsight—a POSA would not have been motivated to arrive at the claimed inventions as Intel posits.

1. Intel Ignores the Range Capabilities of Hansen and the Differences in Range Capabilities Between Hansen and July 2005 WWiSE

Intel ignores the details regarding range capabilities of Hansen and July 2005 WWiSE. Because Hansen already has improved range performance, a POSA would not look to July 2005 WWiSE for anything more. This is especially true because the extended range in July 2005 WWiSE would add redundancy to the greenfield PPDU reducing overall throughput—directly contrary to the teachings of Hansen to reduce overhead and improve throughput.

As described above, Intel's combination takes Hansen's greenfield PPDU and adds an extended range PPDU to Hansen's wireless protocol to purportedly extend the range of reliable communication between devices. *See, e.g.*, Pet. 16-24. But nowhere does Intel demonstrate how that goal is achieved or even desirable given the necessary tradeoffs with loss of throughput. At best, Intel attempts to demonstrate extended range for only a small set of header bits. As explained in Section IV.B.2 *infra*, Intel's focus on header bits—driven by hindsight—fails to consider the teachings of the references as a whole. Intel ignores significant technical differences between Hansen and July 2005 WWiSE regarding range capabilities. Further, in creating its hindsight combination, and solving a range problem that does not exist in Hansen, Intel ignores the stated goals of the references, particularly Hansen. There is no evidence of any need for range extension in Hansen

other than conclusory attorney argument and bald expert testimony, which is insufficient to establish obviousness. *See, e.g.*, *TQ Delta*, 942 F.3d at 1352.

First, Intel ignores the critical differences between how the header bits are sent in Hansen and July 2005 WWiSE. As explained above, in Intel's combination, the Signal*-N header contains 48 information bits split across two symbols with 24 information bits each. *See supra* Section IV.A.5; Pet. 31-32. Hansen explains that, traditionally, 802.11 devices used 48 data-bearing subcarriers. INTEL-1005 [0034]; AXW-2001 ¶¶47, 114. A POSA would have understood the legacy 802.11 standards at the time of invention and would thus have understood from Hansen's explanation that the Signal*-N field is rate ½ coded and transmitted using BPSK modulation, consistent with the legacy 802.11 devices referenced in Hansen.[7] INTEL-1005 [0034]; AXW-2001 ¶114.

This is precisely how legacy 802.11 operated. In 802.11a, from 1999, which also used OFDM, the SIGNAL field is rate ½ coded and mapped onto a single BPSK-modulated OFDM symbol. INTEL-1015, 7-9 ("SIGNAL" "is transmitted with the most robust combination of BPSK modulation and a coding rate of R =

[7] Indeed, Intel and its expert explain that "[e]xisting 802.11 standards . . . would have been ***extremely well-known*** to a POSITA by August 21, 2009." Pet. 25; INTEL-1003 ¶97; *see also* AXW-2001 ¶33.

1/2"); *see also id.* 13; AXW-2001 ¶47; INTEL-1040, 140 ("The PLCP preamble and the signal field are always transmitted at 6 Mbps, binary phase shift keying (BPSK)-OFDM modulated using convolutional encoding rate R = 1/2.").

INTEL-1012 confirms this is also how the TGn Sync HT-SIG field is encoded and modulated. As the TGn Sync proposal relied upon by Intel explains, "BPSK modulation is used for the L-SIG and HT-SIG, with code rate ½ resulting in 6 Mbit/s." INTEL-1012, 131; *see also id.* 133 ("The encoding of HTSIG1 and HTSIG2 shall be the same as LSIG . . . ."). Thus, the TGn Sync HT-SIG field is encoded and modulated just like the SIGNAL field of legacy 802.11a, but comprises two OFDM symbols instead of one because HT-SIG contains twice as many information bits as the legacy SIGNAL field. *See id.* 131-33; AXW-2001 ¶¶73, 115. Indeed, a POSA would recognize that "[t]he HT-SIG field ***is modulated conservatively***" because it uses BPSK modulation and R=1/2 coding. AXW-2015 (Gast 2d ed.) 337; AXW-2001 ¶115.

By contrast, July 2005 WWiSE uses less robust QPSK modulation for its header. July 2005 WWiSE's comparable field to TGn Sync's HT-SIG field is SIGNAL-N (or SIG-N). *See, e.g.*, INTEL-1006, 69-71; AXW-2001 ¶¶81, 116. But as July 2005 WWiSE explains, "the encoding of the single SIG-N MIMO-OFDM symbol shall be performed with QPSK modulation of the subcarriers of the first antenna and shall use convolutional coding at R = 1/2" in mandatory modes.

INTEL-1006, 70; *see also* AXW-2001 ¶¶81, 116; AXW-2015, 321 (explaining that the WWiSE SIGNAL-N field "is always sent using QPSK, R=1/2, and is not scrambled").

But it was well known that BPSK is a more robust scheme than QPSK, meaning that Hansen's header already had a longer range provision than the July 2005 WWiSE's header. AXW-2001 ¶¶44, 54, 115-18; *see also, e.g.*, AXW-2015, 235 ("As range from the access point increases, the received signal gets closer to the noise floor. Stations that are closer have higher signal to noise ratios. As a matter of network engineering, when the signal-to-noise ratio gets too small to support a high data rate, the station will fall back to a lower data rate with less demanding signal-to-noise ratio requirements."); INTEL-1025, 114-17 (explaining that higher rate modulation requires higher signal-to-noise ratio and relates to decreasing range of the system), 89, 94 (QPSK requires increased SNR versus BPSK). The below figure illustrates the relationship between throughput and distance or range and the signal to noise ratio (SNR).

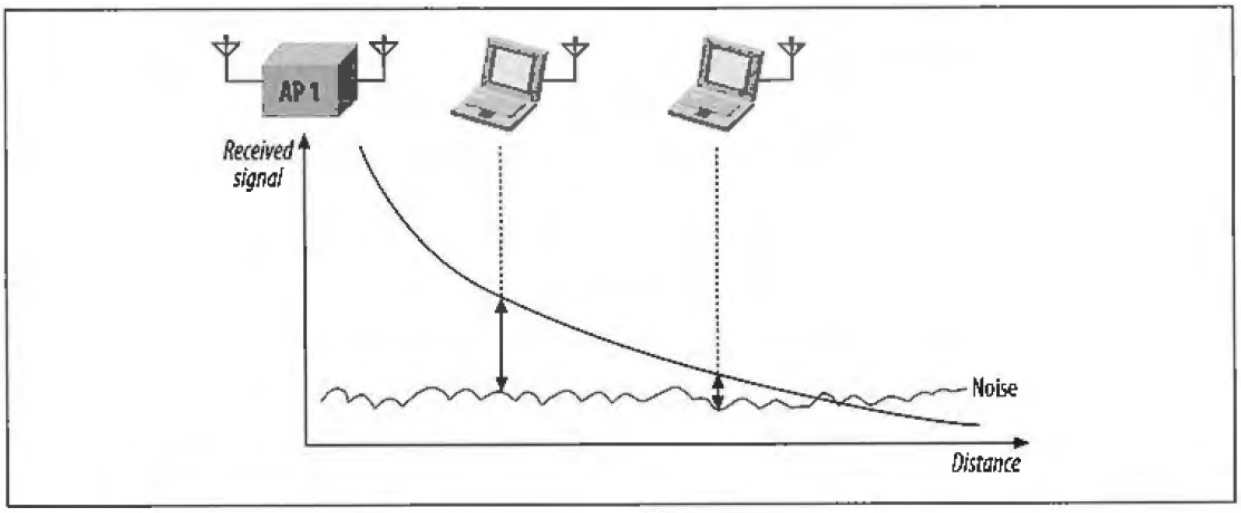

AXW-2015, 235. In the above graph, the location of the transmitting access point is at the 0 distance point. The received signal strength will be lower the further away a receiving laptop is, and thus will have lower SNR, and as the SNR decreases, the throughput decreases until no data at all can be transmitted at just past the maximum range. AXW-2001 ¶54. There is an inverse relationship between the SNR that a modulation mode needs and the distance or range at which it can operate. AXW-2001 ¶54; INTEL-1025, 114-17. But lower rate modulation modes may still be usable at greater distances because they operate with lower SNR. AXW-2001 ¶54. For example, the below annotated chart shows that the 802.11a BPSK R=1/2 mode can perform at a longer range than the 802.11a QPSK R=1/2 mode. AXW-2001 ¶118.

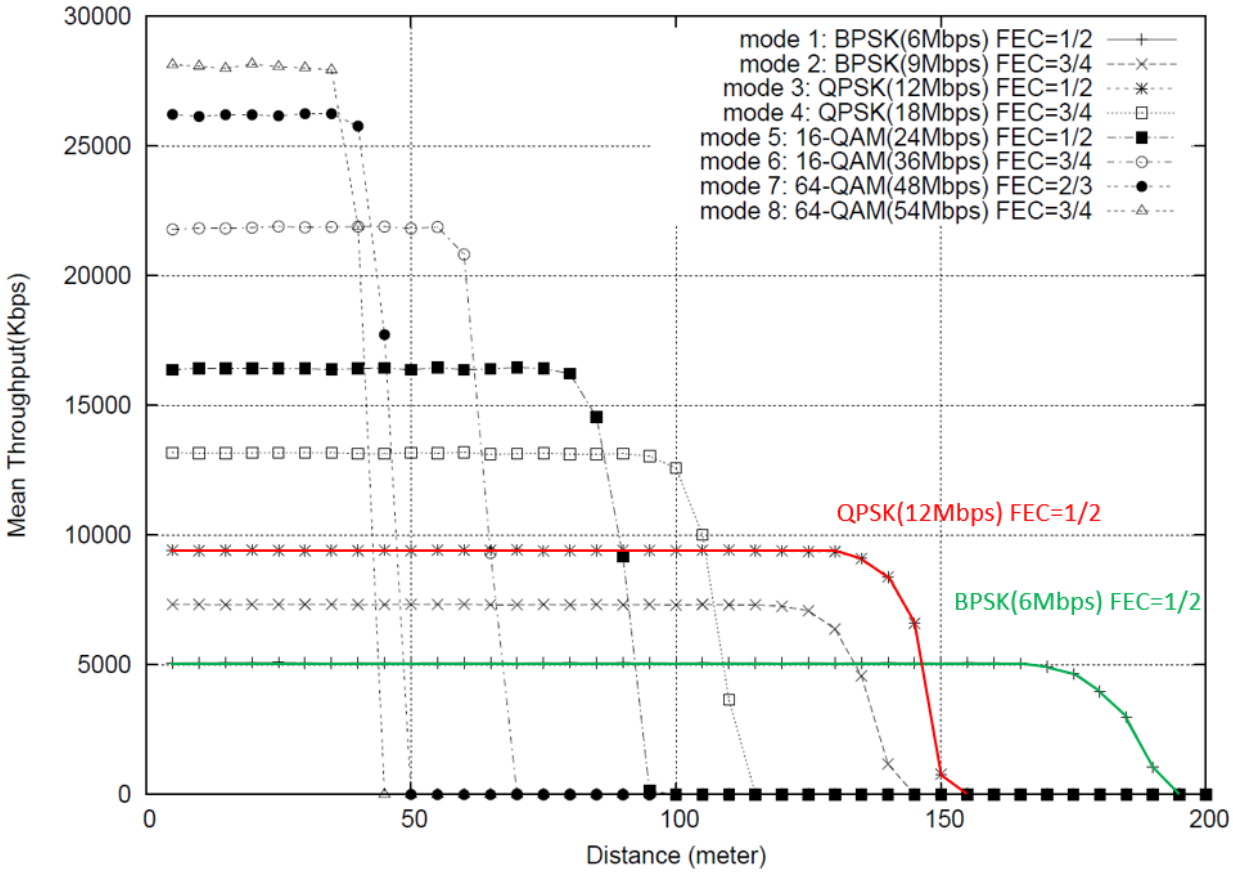

Indeed, this very issue regarding the performance of the modulation used for the header in July 2005 WWiSE was discussed during the TGn Working Group. It was noted that July 2005 WWiSE's QPSK modulation had poor error performance compared to BPSK, and "is not sufficient, since the SIG must be more robust than the data part of the PPDU." AXW-2016 (March 2005 TGn Sync Submission) 35; AXW-2001 ¶117. This underscores what a POSA would have known—the higher-order QPSK of July 2005 WWiSE has worse range performance than the lower-order BPSK of Hansen. AXW-2001 ¶¶44, 116-18. And the repetition in July 2005

WWiSE, at best, puts it back on par with Hansen's BPSK—it does not improve it. AXW-2001 ¶119.

Second, Hansen already includes a range-extending feature, namely beamforming, as Intel admits. *See*, *e.g.*, Pet. 42 n.9; INTEL-1005 Fig. 2b ("Beamforming V Matrix" and "Beamforming U* Matrix"), [0039], [0041], [0042], [0047], [0052]. Indeed, Intel relies on the sounding frame as a benefit of Hansen, *see, e.g.*, Pet. 15, but fails to explain that its purpose is to facilitate beamforming. AXW-2001 ¶76. Beamforming is a range-extending feature where the transmitting device has increased signal energy toward the receiving device. *See, e.g.*, AXW-2001 ¶¶75-77, 120; AXW-2015, 334 ("[*B*]*eamforming* can be used to boost signal quality. Higher signal quality means that a given data rate can be ***used at longer range***."). In contrast, July 2005 WWiSE does not define any particular beamforming method, and does not benefit from range extension through beamforming. Intel's hindsight-driven reconstruction, which impermissibly focuses only on header bits rather than the teachings of the prior art references as a whole,[8] ignores that this difference between the references would suggest to a POSA that there is no reason to combine them. AXW-2001 ¶120.

---

[8] Intel's failure to consider the teachings of the prior art references as a whole is explained further in Section IV.B.2 *infra*.

Third, Intel ignores that in the greenfield scenarios of Hansen and relied on in the Petition, Hansen's MIMO capabilities would also improve range compared to legacy 802.11 systems, which Hansen seeks to improve. AXW-2001 ¶¶121-22. As Intel's expert explains, "[b]ecause Hansen supports [MIMO], Hansen's Figure 6a depicts the PPDU preamble and header fields sent on multiple spatial streams …. As was known in the art …, the header field is either transmitted from one antenna … or an identical header field (Signal*-N) is transmitted by each antenna, even for MIMO operations." INTEL-1003 ¶108. What Intel's expert does not explain (nor does the Petition) is the effect on range of these repeated headers across spatial streams. Repeated headers in a MIMO configuration is a form of diversity, which also boosts range. AXW-2001 ¶¶61-63, 121-22; AXW-2015, 312 (explaining that in MIMO, "simultaneous receiver processing has benefits in resolving multipath interference, and may improve the quality of the received signal far beyond simple diversity"); INTEL-1024, 77-78; INTEL-1012, 121-22; *cf.* Pet. 22 ("The ER capability of July 2005 WWiSE achieves communications ***at a greater distance*** through the introduction of ***diversity*** into its transmitted frames (PPDU)."). That the Petition never mentions this, and Intel's expert ignores it "for ease of discussion," INTEL-1003 ¶108, demonstrates that the Petition does not substantively consider it in forming its hindsight combination.

Thus, Hansen already has a number of features that enhance its range relative to legacy 802.11 devices, which Hansen and the IEEE TGn Working Group sought to improve. *See, e.g.*, INTEL-1005 [0009]. Intel considers none of this in baldly asserting that a POSA would have been motivated to combine the references "to extend the range of successful communication between devices," Pet. 21, which is fatal. *South-Tek Sys., LLC v. Eng'd Corrosion Sols., LLC*, 748 F. App'x 1003, 1006-07 (Fed. Cir. 2018) (finding claims non-obvious because "South-Tek only argued that a person of ordinary skill would have been motivated to use Wood's drain to allow water to drain from Viking's system. ***Viking's system already includes a drum drip drain that serves this purpose***"); *In re Anova Hearing Labs, Inc.*, 809 F. App'x 840, 843 (Fed. Cir. 2020) (reversing obviousness finding because "[t]he Board also does not explain why a person of ordinary skill in the art would be motivated to modify Brown, ***which already includes vents, to address occlusion effect***").

Intel's expert's conclusory testimony repeating the attorney argument—and ignoring the same details—adds nothing. *See, e.g.*, *Harmonic*, 815 F.3d at 1363 ("[Petitioner's] expert testimony in support of this theory is equally unavailing, adding nothing beyond the conclusory statements in [the] petition."); *Smartmatic USA Corp. v. Election Sys. & Software, LLC*, IPR2019-00527, Paper 32 at 34 (Aug.

5, 2020) (giving no weight to an expert declaration that "merely parrots the language in the Petition").

Further, Hansen explains that a greenfield PPDU—which the Petition relies on—provides benefits, including use of "more robust transmission" with "comparable data rates" by *eliminating* portions of the PPDU overhead. INTEL-1005 [0027]; *see also, e.g.*, *id.* Abstract, [0033], [0072]-[0075], [0096]; AXW-2001 ¶¶92-93. Intel never addresses this either. Absent a compelling reason to do so, a POSA would not have added redundant bits to Hansen's greenfield PPDU overhead—as Intel's combination does—against Hansen's teachings. AXW-2001 ¶123. *See, e.g.*, *Chemours Co. FC, LLC v. Daikin Indus., Ltd.*, 4 F.4th 1370, 1376-77 (Fed. Cir. 2021) (finding no motivation to combine where proposed modification "would necessarily involve altering the inventive concept" of the primary reference, which taught away from combination); *Trivascular, Inc. v. Samuels*, 812 F.3d 1056, 1068 (Fed. Cir. 2016) (finding no motivation to modify the prior art where doing so "would destroy the basic objective" of the prior art).

2. Intel Cherry-Picks One Feature Out of July 2005 WWiSE While Failing to Consider the Prior Art References for All Their Teachings

Using nothing but hindsight, the Petition focuses entirely on adding repeated header bits to Hansen while disregarding the consequences of such repetition and the prior art as a whole. Specifically, Intel ignores why and how July 2005 WWiSE

implements its Extended Range mode. Moreover, Intel provides no basis for combining the prior art to extend the range for reception of header bits only.

The Extended Range mode in July 2005 WWiSE is not primarily about headers, but is about range extension for the data portions of the packets. AXW-2001 ¶124. Intel argues that July 2005 WWiSE "expressly suggests the benefit of including an ER capability, stating: 'A characteristic of ER MCS is that they have a longer range than NR MCS.'" Pet. 21-22. But Intel fails to explain the context of this statement from July 2005 WWiSE. The "ER MCS" refers to the transmission mode of the data portion of an ER mode PPDU—not the header. AXW-2001 ¶¶84-85, 124, 127, 140. As July 2005 WWiSE explains, the ER mode "is ***only used*** with the optional NTX-STBC modes (described in subclause 20.3.5.10) and ***only*** with rate-1/2 encoding using BPSK modulation." INTEL-1006, 69. Subclause 20.3.5.10 in turn describes how the optional NTX-STBC modes must be formed, which can only be used "when N_{TX}, the number of TX antennas, is greater than N_{SS}, the number of transmitted spatial streams" and requires particular coding and relationships between the signals transmitted on the various antennas. *Id.* 78-82; *see also, e.g.*, AXW-2001 ¶¶84-85, 127; AXW-2015, 318-19. The Petition never even mentions STBC or that the ER mode of July 2005 WWiSE is used with STBC, let alone considers how such additional complexities to the transceiver could or would be

incorporated into Hansen, which never mentions such functionality. AXW-2001 ¶127.[9]

The Extended Range mode of July 2005 WWiSE comes with additional complexities that Intel never considers. Indeed, the proponents of July 2005 WWiSE explained that "4 main features ***need to be ensured*** to grant range extension": (1) "Appropriate PHY modes," meaning the STBC modes described above; (2) "Beacon," meaning a special management frame that adds complexity to the overall protocol; (3) "Coexistence," meaning special protection mechanisms need to be built into the protocol to allow for normal range and extended range devices to both be on a network and avoid hidden node problems; and (4) "Enable robust signaling," meaning the SIGNAL header field must be receivable at an extended range relative to the NR SIGNAL header field. INTEL-1030, 22, 24-29; AXW-2001 ¶¶84-89, 124-28; *see also* INTEL-1006, 46-48 (describing "mandatory" protection mechanisms when using ER-capable devices in order to "mitigate the hidden node problem"), 50 (describing "ER beacon" using "an ER MCS"), 52 (describing

[9] While Intel's expert mentions "the Space-Time Block Code MCS" in a footnote, it is only to note that the ER MCS is an STBC MCS. INTEL-1003 ¶86 n.3. Intel's expert likewise never considers how or why the additional complexities associated with STBC operation could or would be incorporated into Hansen.

"mandatory" beacon rules for ER-capable devices). At best, Intel addresses only the fourth requirement, but as explained in Section IV.B.1 *supra*, Intel fails to consider that July 2005 WWiSE uses less robust modulation for its header than Hansen to begin with. And by failing to consider all these other required complexities for July 2005 WWiSE's ER mode, and failing to justify the need for any range extension in Hansen in the first place, Intel fails to demonstrate a motivation to pluck just the repeated header bits out of July 2005 WWiSE while ignoring the rest of its teachings, which would greatly complicate any purported combination. AXW-2001 ¶129; *see, e.g.*, *Henny Penny Corp. v. Frymaster LLC*, 938 F.3d 1324, 1331-32 (Fed. Cir. 2019) (noting "the longstanding principle that the prior art must be considered for all its teachings, not selectively"); *Provisur Techs., Inc. v. Weber, Inc.*, No. 2021-1851, 2022 WL 17688071, at *5 (Fed. Cir. Dec. 15, 2022) ("because of this ***increased complexity***, a person of ordinary skill in the art would have lacked motivation to combine the references").

By ignoring the above, which are needed for July 2005 WWiSE's Extended Range mode to function properly, Intel nowhere demonstrates that the range of receiving useful data (i.e., the data or payload of the greenfield PPDUs) is achieved. AXW-2001 ¶¶124, 129, 140. Yet Intel argues a motivation to combine based generally on "extend[ing] the range of successful communication between devices" using Hansen's greenfield PPDU, and that extended range capability "is particularly

beneficial in WLAN systems in which a potential exists for the receiver to move a significant distance from the transmitter." Pet. 21-22. But Hansen does not mention any need for extended range. That is because, as explained in Section IV.B.1 *supra*, Hansen already had range-extending features like beamforming. AXW-2001 ¶¶120-21, 129. Indeed, since basic repetition was known, a POSA would have understood that, since basic repetition was known, if additional range extension would have been desirable, Hansen could have added repeated headers. AXW-2001 ¶141. Hansen chose not to, underscoring that a POSA would not find it desirable to add repeated headers to Hansen. *Id.*

A POSA would have understood that such features of Hansen already provided the functionality that Intel states is the reason to make the combination. AXW-2001 ¶¶127, 140-42. Moreover, there were other ways to extend range such as beamforming, changing the modulation mode, operating at lower frequency bands, or changing the code rate. *Id.* ¶141. Intel never considers any of them, much less explains why a POSA would have necessarily plucked July 2005 WWiSE's range extension feature—which was rejected for its proposed standard—rather than the alternative solutions. *Id.* ¶¶90, 141. Intel's analysis oversimplifies this process because a POSA would have not simply adopted one option to extend range without first comparing and weighing that option against others before concluding that header repetition is viable or even desirable.

At bottom, the most Intel can claim is that its combination could extend the range for reception of the Signal*-N field by itself.[10] But nowhere does Intel articulate a motivation to combine the prior art to merely extend the range of header bits only. Indeed, a POSA would have understood that extending the range of header bits alone would not be a useful exercise here, and would not have modified Hansen, against Hansen's teachings, to add a feature that Hansen does not need that does not provide extended range for the payload data. AXW-2001 ¶¶123-24, 140-42; *supra* Section IV.B.1. And Intel never explains what would have motivated a POSA to go back to a proposal that the 802.11 TGn rejected and never included in the 802.11n standard. AXW-2001 ¶90. Thus, Intel has failed to articulate any reason a POSA would have combined Hansen and July 2005 WWiSE only to add repeated header bits. *See, e.g.*, *Kinetic Concepts, Inc. v. Smith & Nephew, Inc.*, 688 F.3d 1342, 1366-67 (Fed. Cir. 2012) ("Even if the references disclosed all of the limitations of the asserted claims, which they do not, S & N still needed to proffer evidence indicating why a [POSA] would combine the references to arrive at the claimed invention.").

3. Intel Arrives at the Claimed OFDM Symbol Ordering Only Through Hindsight

Intel's reliance on hindsight in arguing a POSA would arrive at the claimed OFDM symbol ordering is apparent for at least two reasons. First, Intel gets there

[10] As explained in Section IV.B.3 *infra*, Intel's combination fails to even do this.

only by departing from the teachings of the prior art without sufficient explanation. Second, Intel ignores a fundamental flaw in its combination. The receiver in Intel's combination would not know which greenfield PPDU it is receiving—NR or ER—and therefore would not be able to properly receive the PPDUs.

Intel admits that neither Hansen nor July 2005 WWiSE disclose the claimed ordering of the four OFDM header symbols. Pet. 49. Indeed, July 2005 WWiSE—the only part of the combination that has repeated headers—teaches only repeating a field, and thus teaches a different ordering than Intel's combination. The figure below shows an exemplary extended range PPDU from July 2005 WWiSE.

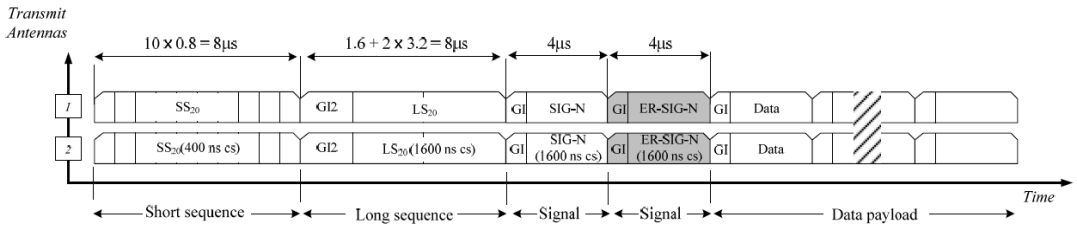

INTEL-1006, 67. The entire SIG-N field is duplicated as the ER-SIG-N field. AXW-2001 ¶86. The counterpart to July 2005 WWiSE's SIG-N field in Hansen is the "HT-SIG header field." INTEL-1005 [0067], Fig. 4c. But rather than duplicate the HT-SIG field done in July 2005 WWiSE, Intel breaks the HT-SIG field apart and duplicates the separate symbols instead. Pet. 34-35, 48-49. This random breaking apart of the HT-SIG field is pure hindsight, and is neither taught nor suggested in either reference, and Intel's expert's conclusory testimony provides no rational basis for the combination. *University of Strathclyde v. Clear-Vu Lighting LLC*, 17 F.4th

155, 160-62 & n.6 (Fed. Cir. 2021) (reversing Board's finding of obviousness where neither reference taught or suggested the limitation and rejecting Board's reliance on expert testimony alone); AXW-2001 ¶¶130-31. Intel argues that TGn Sync—not Hansen or July 2005 WWiSE—supports this because TGn Sync states that "HTSIG1 shall be transmitted first in time." Pet. 51. Yet, following Intel's identified teaching in July 2005 WWiSE and repeating the entire HT-SIG header field of Hansen would still result in HTSIG1 being transmitted first. AXW-2001 ¶131.

Intel also artificially narrows the number of alternatives for ordering the header symbols, by again relying on the TGn Sync statement that HTSIG1 is transmitted first, rather than any disclosure in Hansen or July 2005 WWiSE, to argue it would have been obvious to try the claimed ordering. Pet. 49-50. But no TGn Sync proposal uses repeated header bits, let alone for extended range, and certainly does not teach breaking up the HT-SIG field when doing so, and Intel does not demonstrate or even argue otherwise. Intel never considers whether taking the order from TGn Sync and combining it with the unrelated teaching of repeated header bits from July 2005 WWiSE would require a change in order, much less explain why it would not. AXW-2001 ¶132. Intel's failure here is fatal because it leads to a fundamental flaw in the proposed combination.

As explained in Section IV.A.5 *supra*, Intel's combination posits an NR greenfield PPDU as a first packet type, and an ER greenfield PPDU as a second

packet type. In such a mixed system, a receiver must know when to look for which PPDU—when to look for repeated fields. AXW-2001 ¶¶133-36. The only thing identified in the Petition to do this is the "REXT" bit, which Intel states is used "to indicate the device is operating in standard (NR) or ER mode." Pet. 20. By using the challenged claims as its roadmap rather than considering the details, Intel places the REXT bit in the HT-SIG2 field. Pet. 20-21 ("A POSITA would have understood that the reserved field of the HT-SIG2 part of Signal*-N and Long Signal*-N would be used to carry this REXT information."). This approach is flawed.

According to Intel, the combination would operate in ER mode at a receiver such that "the first symbol (HT-SIG1) is received, demodulated, and stored in a buffer at the receiver. The second HT-SIG1 symbol (ER-HT-SIG1) is then received, demodulated and combined with HT-SIG1 from the buffer and the combined demodulated symbol is decoded. … The same process is repeated for HT-SIG2/ER-HT-SIG2." Pet. 52. Because Intel's combination places the REXT bit in the HT-SIG2 symbol, a receiver cannot even know that there are repeated header symbols until the *third* header symbol (the first HT-SIG2 symbol) is successfully received. AXW-2001 ¶137. But according to Intel, its system blindly combines the first two symbols received without even knowing these are meant to be HT-SIG1 and ER-HT-SIG1. *Id.* Indeed, Intel asserts this blind combination is part of the motivation for choosing the claimed symbol order among others because it avoids the need to

buffer both HT-SIG1 and HT-SIG2. Pet. 52; AXW-2001 ¶137. But in NR mode, the symbols transmitted are HT-SIG1 followed by HT-SIG2. Pet. 44-45; AXW-2001 ¶137. Following blind combination of the first two symbols here like Intel does would fail because the two symbols are not the same. AXW-2001 ¶¶137-38. This failing is not addressed by the Petition.

Intel also asserts the combination is motivated by having the ability to "start communication in NR mode and move to ER mode if channel conditions become bad and messages are dropping," but also that a transmitter wishes "to transmit at the highest speed achievable based on the current conditions of a channel." Pet. 22-23. But Intel never explains how devices could flip back and forth between NR and ER modes as needed. Intel assumes that a transmitter would recognize deteriorating channel conditions, and then simply set the REXT bit to 1. AXW-2001 ¶¶133-38. But because the REXT bit is in the third header symbol according to Intel, the receiver does not know to start combining header symbols. *Id.* ¶¶136-37. This failing is also not addressed by the Petition.

The failings above show that Intel relied on the claims as a roadmap—its hindsight blighted approach is not even workable. AXW-2001 ¶138. Underscoring this point, Intel even admits that neither Hansen nor July 2005 WWiSE disclose the claimed ordering of the four OFDM symbols. Pet. 49. Aside from the failed

motivations addressed above, Intel identifies no source for ordering the OFDM symbols in its combination but the challenged claims themselves.

4. Intel Fails to Provide Any Rational Reasons to Combine Hansen with July 2005 WWiSE as in the Petition

By examining the details and differences of Hansen and July 2005 WWiSE, Intel's purported motivations to combine disintegrate, and it is apparent that Intel relies on impermissible hindsight to create a combination with no perceivable benefits. "The showing of a motivation to combine must be clear and particular, and it must be supported by actual evidence." *Teleflex, Inc. v. Ficosa N. Am. Corp.*, 299 F.3d 1313, 1333-34 (Fed. Cir. 2002) (finding expert supporting invalidity relied on hindsight). Intel fails to identify any clear or particular motivation to combine when the references are properly considered as above, and offers only conclusory expert testimony, which largely parrots the Petition without any evidence or support. *See, e.g.*, *Harmonic*, 815 F.3d at 1363; *Smartmatic*, IPR2019-00527, Paper 32 at 34. Lacking any valid motivation to combine, the Petition instead uses the claims of the '449 patent as a roadmap to reach the flawed Hansen and WWiSE combination. The Board should reject Intel's improper use of hindsight.

a. Hansen Does Not Suggest Combination With July 2005 WWiSE

Hansen's goal of greenfield PPDUs—PPDUs without unnecessary legacy fields—does not suggest combining Hansen with features from July 2005 WWiSE that add additional fields to the PPDU.

Intel asserts that Hansen suggests combination with July 2005 WWiSE because "Hansen defined a compromise proposal based on aspects of both January 2005 WWiSE and the TGN Sync proposal." Pet. 21. But Hansen is not focused on the two proposals at large; Hansen is focused just on "greenfield preambles for 802.11n," which were absent from TGn Sync proposals. INTEL-1005 [0007], [0033]; AXW-2001 ¶91. Hansen explains "greenfield" refers to a situation where no legacy 802.11 devices are present, allowing the network to dispense with fields required only by legacy 802.11 devices. INTEL-1005 Abstract, [0027], [0032]-[0033]; AXW-2001 ¶91. Hansen does generally refer to "[t]he WWiSE proposals" and describes exemplary fields in accordance with them. INTEL-1005 [0034], [0077]-[0086]. But Hansen's Figure 6a training and header fields, on which Intel's combination is based, are derived from TGn Sync proposals and use nothing from the WWiSE fields described. AXW-2001 ¶139. That is not surprising given that the July 2005 WWiSE PPDU definition was rejected by the IEEE. *Id.*

As the Petition explains, the Signal*-N field of Hansen Figure 6a uses the HT-SIG field from Hansen Figure 4c. Pet. 30; AXW-2001 ¶94. Nothing from WWiSE

(e.g., Figures 5a-5c) is incorporated into Hansen's Figure 6a PPDU aside from the general concept of a greenfield mode. AXW-2001 ¶95. Hansen Figure 4a turns into Hansen Figure 6a simply by removing the L-SIG field (not needed in a greenfield system), but ensuring that short and long preambles (HT-STF and HT-LTF respectively) remain ahead of the Signal*-N field, as is necessary to ensure proper reception of the Signal*-N field. *Id.* ¶94. While Hansen Figure 6a refers to these as "HT" training fields, Hansen does not require them to be different from the "LT" training fields in Figure 4a, and a POSA would have understood that they could be the same. *See* INTEL-1005 [0062] (Figure 4a L-STF and L-LTF both approximately 8 µs in duration), [0094] (Figure 6a HT-STF and HT-LTF both approximately 8 µs in duration); AXW-2001 ¶94. Figure 6a also does not adopt the ordering of the symbols from the WWiSE proposals depicted in Hansen Figure 5c. Specifically, in Figure 6a, all training symbols are transmitted before the Signal*-N field unlike in Figure 5c for WWiSE. AXW-2001 ¶95.

Thus, aside from a greenfield mode, Hansen borrows nothing from the WWiSE proposals in forming its greenfield preambles, let alone "bridge the gap between the WWiSE and TGn Sync industry groups" and their varied approaches to the standard as Intel argues. Pet. 21; *see, e.g.*, AXW-2001 ¶139; AXW-2015, 314-42. The mere desire to have a greenfield mode—meaning one without unnecessary legacy fields—provides no motivation to start re-architecting the protocol to include

additional features neither mentioned by, nor beneficial to, Hansen. AXW-2001 ¶139. And that others in the field wanted to combine the two *proposals*, Pet. 21, says nothing about the repeated header that Intel plucks out of July 2005 WWiSE. A general desire to combine two competing proposals—filled with numerous details, options, and features—to arrive at a final standard says nothing about a motivation to combine the ER header bits into the standard. AXW-2001 ¶139. None of the documents that Intel cites mention repeated header bits, and indeed, the 802.11n standard *did not* incorporate July 2005 WWiSE's repeated header bits it into its headers. *Id.*; INTEL-1027; INTEL-1028; INTEL-1021. In other words, when a compromise was actually reached and the 802.11n standard was defined, the TGn working group determined that the repeated header of July 2005 WWiSE should not used. AXW-2001 ¶139. Thus, Intel fails to provide evidence of motivation to combine the repetition feature of July 2005 WWiSE with Hansen.

b. Intel Incorrectly Equates Extended Range Between Devices With Merely Repeating Header Bits

Intel asserts that a POSA would have been motivated to combine to extend the range of communications between devices. Pet. 21-22. But July 2005 WWiSE does not provide extended range between devices merely by repeating header bits—it requires far more to do that. Thus, Intel's purported motivation, generally, for extended range provides no basis for only repeating header bits.

As explained above, Intel ignores that Hansen already has improved range versus July 2005 WWiSE, including with respect to the header on which the Petition is solely based. *See supra* Section IV.B.1. And Intel provides no evidence that further improvement would have been beneficial. *Rovalma, S.A. v. Bohler-Edelstahl GmbH & Co. KG*, 856 F.3d 1019, 1025-26 (Fed. Cir. 2017) ("[I]t does not necessarily follow from prior-art disclosures of the general desirability of [an attribute] that a person of ordinary skill would have been motivated to increase [that attribute] beyond levels previously achieved.").

And as described above in Section IV.B.2, Intel focuses only on the repeated header and ignores extending the range of anything else such as the data payload. But Intel cites no evidence that a POSA would have believed that repeating the header would be beneficial if added to Hansen. Instead, Intel points to the "ER MCS"—that is, the modulation and coding scheme used *for the data payload* of a packet—having "a longer range than NR MCS" (the modulation and coding scheme used for normal range communications). Pet. 21-22; AXW-2001 ¶¶84-85. Yet Intel then entirely omits any ER MCS from its combination and never explains how it could or would be incorporated into Hansen, given that July 2005 WWiSE's ER MCS must use NTX-STBC, which is wholly absent from Hansen and Intel's

combination. AXW-2001 ¶140.[11] Moreover, TGn discussed that beamforming was "superior to STBC." *See, e.g.*, AXW-2016, 41-42; AXW-2001 ¶142. Thus, Intel's purported evidence does not motivate adding the July 2005 WWiSE ER features into Hansen, let alone adding just the repeated header. *See, e.g.*, *St. Jude Med., LLC v. Snyders Heart Valve LLC*, 977 F.3d 1232, 1242-43 (Fed. Cir. 2020) (finding no motivation to combine because "the particular combination" proposed kept only one of two "integral" aspects of a reference without "meaningful explanation for this proposal"); AXW-2001 ¶¶140-41.

Arguing only in generic terms, Intel baldly asserts that extended range capability is particularly beneficial in WLAN systems. Pet. 22. Intel elsewhere admits that repetition to obtain the extended range that Intel argues its combination provides—but fails to demonstrate is achieved—comes at the expense of throughput. *See id.* 23; AXW-2001 ¶¶123, 140-41. But unnecessary bits and decreased throughput are the opposite of Hansen's teachings. *See, e.g.*, INTEL-1005 Abstract ("The utilization of greenfield access may reduce the portion of time required to

---

[11] As explained above in Section IV.B.2, Intel ignores all the other aspects of July 2005 WWiSE that are attendant with its ER mode, including hidden node protection and additional beacon frames, and fails to show any motivation that a POSA would add these to Hansen as well. AXW-2001 ¶129.

transmit data due to overhead comprising preamble fields and header fields. This may enable higher data throughput rates to be achieved."); *see also* AXW-2001 ¶123; *supra* Section IV.B.1. While trading off throughput for additional range may be desirable in some situations, given the modulation mode of Hansen's Signal*-N fields is already more robust relative to July 2005 WWiSE, there is no evidence that this is the case here. AXW-2001 ¶¶140-42. Simply put, Hansen and July 2005 WWiSE have different approaches for range extension, and because each "independently operates effectively, a person having ordinary skill in the art, who was merely seeking to [increase range], would have no reason to combine the features of both devices into a single device." *Kinetic Concepts*, 688 F.3d at 1369; *see also supra* Section IV.B.2.

And if the mere "potential … for the receiver to move a significant distance from the transmitter" was all that was necessary to prompt a POSA to modify a protocol to include extended range features, as Intel argues (Pet. 22), and "repeating parts of a header field" is merely a "simple concept" as Intel's expert posits (INTEL-1003 ¶165), then one would have expected any of the 802.11 standards prior to 802.11n (or even 802.11n, which does not incorporate July 2005 WWiSE's repeated header bits) to have included that feature. AXW-2001 ¶90. Instead, as a POSA knew, wireless networking is a series of tradeoffs. *Id.* ¶141. Those tradeoffs must account for modulation modes used, which Intel entirely fails to do. *Id.* Intel and

its expert state that "[t]he ER capability of July 2005 WWiSE achieves communications at a greater distance through the introduction of diversity into its transmitted frames (PPDU)." INTEL-1003 ¶93. Putting aside that they have provided no evidence of motivation to combine just repeated headers from July 2005 WWiSE with Hansen, if the ER capability achieves communications at greater distance, that is relative only to July 2005 WWiSE's NR capability—not relative to Hansen. AXW-2001 ¶141. Neither the Petition nor Intel's expert provide any evidence to the contrary. Thus, the assertion that a POSA "would have therefore been motivated to combine July 2005 WWiSE's ER capability into Hansen's system ***to achieve better coverage at a greater distance***" is baseless, particularly because there is no analysis of the modulation and coding used between the two or the relative range performance (including the data). Pet. 22; AXW-2001 ¶141.

c. Intel's REXT Bit Implementation Is Flawed

The numerous flaws in Intel's REXT bit implementation would have been apparent to a POSA, and a POSA would not have been motivated to create a system with such flaws.

Intel asserts that a POSA "would have been motivated to include the capability for an ER capable device to turn on or off ER operation using a header bit (REXT)." Pet. 22-23. Intel's basis is that a POSA "would have understood that a transmitter is motivated to transmit at the highest speed achievable based on the current

conditions of a channel." *Id.* This reasoning only makes sense when considering the payload—discussion of which is wholly absent from the Petition, *see supra* Section IV.B.2—as opposed to only one or two header fields. AXW-2001 ¶143. Thus, there is no evidence that a POSA would have wanted to turn on and off the ER mode in the combination to transmit at the fastest rate achievable. *Id.*

Furthermore, despite recognizing that both TGn Sync and July 2005 WWiSE were working toward an 802.11n standard, and arguing a motivation to combine "to reach a final version of the 802.11n standard," Intel asserts that a POSA would have eliminated the only reserved bit in HT-SIG for the REXT bit in its combination. Pet. 9, 21-24; *see also* INTEL-1005 [0007]; AXW-2001 ¶144. But a POSA would have known that industry standards such as 802.11 routinely keep one or more reserved bits for extensibility. *See, e.g.*, AXW-2001 ¶144; INTEL-1015, 7; INTEL-1012, 133-34; INTEL-1006, 69-70; INTEL-1017, 275-77. Indeed, Intel admits that "the use of reserved fields was commonly done to support modifications or customizations to a standard such as IEEE 802.11." Pet. 24. But eliminating the reserved bit means the combination would no longer be fit for the references' stated—and Petition-admitted—purposes. *See, e.g.*, *Cook Grp. Inc. v. Boston Sci. Scimed, Inc.*, 809 F. App'x 990, 1001 (Fed. Cir. 2020) ("[T]he Board may consider whether the modification renders the reference inoperable for its intended function in deciding whether a POSA would have a motivation to combine the references,

even if that function is not a feature of the claimed device at issue."); AXW-2001 ¶144. This would direct a POSA away from the combination because an 802.11 standard without any possibility for extensibility would not have been acceptable. AXW-2001 ¶144.

Moreover, as noted above in Section IV.B.3, a POSA would have known that including the REXT bit in the HT-SIG2 symbol would not work in the way that Intel proposes. Because the combination offers no way to send payload data at extended range, and there is no provision for a receiver to know when to switch range modes, a POSA would not have made the combination as proposed.

d. Intel Asserts a Straightforward Combination Only By Ignoring the Details

Intel asserts that the combination is merely the application of a known technique to a known device ready for improvement and use of a known technique to improve similar devices in the same way. Pet. 23-24. But as explained throughout above, Intel and its expert ignore the details—as discussed, Hansen and July 2005 WWiSE are not similar other than superficially. And here again, Intel's expert merely parrots the Petition and offers no evidence to support his opinions. *See, e.g.*, *Harmonic*, 815 F.3d at 1363; *Smartmatic*, IPR2019-00527, Paper 32 at 34. Hansen is not ready for improvement in the same way because Hansen already has sufficient range capabilities. *See supra* Section IV.B.1. Further, Intel makes no assertion and provides no evidence that STBC was a known technique that was readily and easily

combinable with Hansen's transceiver. Yet that is the only use case for July 2005 WWiSE's ER capability. *See supra* Section IV.B.2; AXW-2001 ¶145.

Intel also asserts that a POSA would have applied the ER capability to Hansen because the greenfield PPDU "has a similar structure to the greenfield PPDU disclosed in WWiSE." Pet. 24. This specious argument is the equivalent of saying *any* two header structures are similar because they have bit maps. Even a cursory review shows the two are very different, reflecting the very different functionalities of the two proposals. AXW-2001 ¶¶146-47. Hansen includes a sounding packet bit, and 2 bits indicating the number of training symbols used with the sounding packet, used *inter alia* with beamforming—another range boosting technique. *Id.* ¶147. July 2005 WWiSE does not have sounding packets or beamforming. *Id.* Hansen uses 6 bits for modulation, coding, and number of spatial streams, while July 2005 WWiSE uses 12 bits to provide similar information. *Id.* Hansen has 1 bit for the guard interval, while July 2005 WWiSE has no such bits or capability. *Id.* While both Hansen and July 2005 WWiSE have 1 bit related to aggregated PPDUs, they have different meanings. *Id.* Hansen includes 2 bits for initialization of a scrambler, while July 2005 WWiSE has no such bits. *Id.* Hansen includes 1 bit for 20/40MHz selection, while July 2005 WWiSE uses 2 bits for the same function. *Id.* Hansen reserves 1 bit for future extensibility, while July 2005 WWiSE reserves 13 such bits.

Id. And July 2005 WWiSE adds the REXT bit, which is not used—and has no use—in Hansen. *Id.*

Beyond the header, the PPDUs have further differences. Hansen uses two symbols BPSK-modulated with 24 header bits each, while July 2005 WWiSE uses one symbol QPSK-modulated with 54 header bits. *See supra* Section IV.B.1; AXW-2001 ¶146. The Petition considers none of these differences, yet asserts that a POSA would simply start rearranging and changing bits. That is entirely unsupported.

Intel also asserts the combination merely combines prior art elements according to known methods. Pet. 24. This is wrong for similar reasons—Intel ignores the details. That a POSA may know how to modify bit maps does not demonstrate that a POSA would have been motivated to make the specific changes Intel asserts would be made. *See, e.g.*, *St. Jude*, 977 F.3d at 1242-43. For example, as explained above in Section IV.B.3, a POSA would have recognized that including the REXT bit in the HT-SIG2 symbol would not work as Intel proposes and therefore would not have expected success in that hindsight reconstruction. Likewise, Intel nowhere demonstrates that a POSA would have known how to add July 2005 WWiSE's STBC approach—the only use July 2005 WWiSE makes of the REXT bit and ER mode—to Hansen's transceiver, let alone expected success in doing so. *See supra* Section IV.B.2. Intel argues a POSA would have expected success only by

ignoring the details, the complexities, the complications, and pitfalls of the proposed hindsight combination as explained throughout above. AXW-2001 ¶148.

C. The Addition of Choi Does Not Overcome the Flaws in the Combination of Hansen and July 2005 WWiSE

Intel adds Choi to the flawed combination of Hansen and July 2005 WWiSE for one specific purpose. Intel argues that "the order of symbol generation for the second packet type" is "explicitly disclosed by Choi." Pet. 71. But the addition of Choi cures none of the failings described in the previous section with respect to combining Hansen and July 2005 WWiSE. AXW-2001 ¶149.

As with combining Hansen and July 2005 WWiSE, Intel ignores key differences between Hansen and Choi. Hansen provides a MIMO system, which extends its range, including for header bits, while Choi is a single input single output (or SISO) system, dealing with 802.11 standards prior to 802.11n that did not have MIMO capability. *Id.* ¶¶104-05, 150. Likewise, Hansen includes range-boosting beamforming, possible because of MIMO, wholly absent from Choi. *See id.* ¶150; *supra* Section IV.B.1. By ignoring these differences, Intel fails to recognize that a POSA would have had no reason to resort to repetition coding and decreased throughput as in Choi to increase range. AXW-2001 ¶150. This is especially so when decreased throughput is contrary to the goals of Hansen, which can already use "more robust transmission" with "comparable data rates" by *eliminating* portions of the PPDU overhead. INTEL-1005 [0027]; *see also, e.g.*, *id.* Abstract, [0033],

[0072]-[0075], [0096]; AXW-2001 ¶123. Thus, Choi does not "expressly motivate[] the combination" as Intel asserts. Pet. 74.

Additionally, even assuming Choi discloses the claimed header ordering, as described in Section IV.B.3 above, by placing the REXT bit in the HT-SIG2 symbol as the combination does, the resulting system is unworkable because a receiver would not know when to be in ER or NR mode, or when repeated headers are being used. The addition of Choi does not change that. AXW-2001 ¶149.

Intel's additional motivation to add Choi also falls flat. Intel argues that Choi would be added because July 2005 WWiSE "does not provide details regarding how to implement such repetition in the transmission portion of a transceiver." Pet. 73-74. Yet, Intel then describes such details in July 2005 WWiSE. *See id.* 73-74. Further, Intel's expert states that "repeating parts of a header field" is a "simple concept." INTEL-1003 ¶165. If so, Intel never explains why a POSA would look for another reference to implement a "simple concept" that a POSA would purportedly already know from their "experience with wireless communication protocols." *Id.*

Thus, a POSA would not be motivated to combine Hansen, July 2005 WWiSE, and Choi to arrive at the challenged claims.

V. The Board Should Exercise Discretion to Deny Institution Under 35 U.S.C. § 314 and *Fintiv*

The *Fintiv* factors overwhelmingly support denial of this tardy petition, filed just weeks before the statutory deadline. Intel is undisputedly participating in the two parallel district court proceedings involving real parties in interest ("RPIs") Dell and Lenovo (Pet. 79), and those two separate cases are moving rapidly towards two separate and complete jury trials that will take place in April and July 2024, ten and seven months, respectively, before any anticipated final written decision from the Board. *See* Factor 2 below.

Despite these looming trial dates, Intel gives *Fintiv* the back of its hand, with a conclusory assertion of "compelling merits" and relying on its late-filed venue motions. Pet. 78. Intel provides no authority or evidence showing the trials will not happen on schedule, and fails to take into account median time-to-trial statistics. Even worse, Intel offers no stipulation whatsoever, despite the undisputed overlap between this IPR and the two district court litigations.

Accordingly, the Board should exercise its discretion and deny this tardy Petition under § 314(a), as all of the *Fintiv* factors favor denial.

A. Factor 1 (Stay) Favors Denial

Trial is imminent and no party has moved to stay despite the looming trial dates. Even if they had, courts in the Eastern District of Texas will not grant a stay in this situation. *E.g.*, *MyPort, Inc. v. Samsung Elecs. Co.*, No. 2:22-CV-00114-

JRG, Order at 4-5 (E.D. Tex. June 13, 2023) (Dkt. No. 73) (denying motion to stay pending instituted IPR proceeding "[g]iven the substantial amount of work and financial resources already poured into this case"); *Koninklijke KPN N.V. v. Telefonaktiebolaget LM Ericsson*, No. 2:21-CV-00113-JRG, Order at 4-5 (E.D. Tex. July 7, 2022) (Dkt. No. 215) (similar).

Accordingly, this factor weighs in favor of denial, or is neutral at worst.

B. Factor 2 (Trial Date Proximity) Strongly Favors Denial

Petitioner Intel and the named RPIs will participate in *two* jury trials shortly after institution, weighing heavily in favor of denial.

First, the Dell trial will begin in April 2024—less than two months after institution, and *ten months* before this IPR's final written decision. AXW-2017 (Oct. 23, 2023 Dell Docket Control Order) 1. The Lenovo trial will be in July 2024, *seven months* before the final written decision. AXW-2018 (Oct. 31, 2023 Lenovo Docket Control Order) 1. Accordingly, this factor "weighs heavily in favor of discretionary denial." *See Zhuhai Cosmx Battery Co. v. Ningde Amperex Tech. Ltd.*, IPR2023-00587, Paper 12 at 10-11 (Sept. 22, 2023).

Second, the same result is reached if considering the median time-to-trial statistics instead. The median time to a jury trial in the Eastern District of Texas before Judge Schroeder is just over thirty months. AXW-2020 (Schroeder milestones). The Dell litigation has been pending since June 2022, and thus even if

the district court took thirty months to reach trial, the jury trial would occur in December 2024, two months before the projected final written decision date. Likewise the Lenovo litigation has been pending since July 2022, and thus even if the district court took thirty months to reach trial, that date would fall in January 2025, one month before the projected final written decision date.

Although Intel argues that both deadlines are "tentative" in view of pending motions to transfer and improper venue, Pet. 78, the district court has since denied Dell's motion to transfer. AXW-2021 (Dell Docket Report) at Dkt. No. 142 (denying motion to transfer). And the Lenovo motion to transfer was filed late in the district court case after the Court denied its motion to dismiss. AXW-2022 (Lenovo Docket Report) at Dkt. No. 110 (R&R recommending denial of motion to dismiss on September 6, 2023), Dkt. No. 119 (adopting R&R on September 26, 2023), Dkt. No. 122 (motion to transfer filed October 11, 2023). There is thus no reason to suspect that the court will grant Lenovo's motion. Further, Intel and the named RPIs have not asked the court to delay either of the two trials, and there is no indication that it will. To the contrary, the district court just issued amended Docket Control Orders in both cases, confirming that trial will occur on April 15, 2024 in the Dell case and July 15, 2024 in the Lenovo case. AXW-2017, AXW-2018. The Board should reject Intel's invitation to speculate that the court will grant *any* late-filed procedural motions or otherwise delay *both* of these two scheduled trials.

Accordingly, this factor strongly favors denial.

C. Factor 3 (Investment) Strongly Favors Denial

There is no dispute that the level of investment in the district court proceedings is already high and will be even higher at the time of institution. Given that the parallel district court cases are *both* at advanced stages, this factor weighs strongly in favor of denying institution.

In RPI Dell's case, claim construction briefing concluded on October 13, 2023, and the court held its *Markman* hearing on November 16, 2023. Fact discovery is set to close in December 2023, and expert discovery concludes in January 2024—a month before any expected institution decision. AXW-2017. Contentions were exchanged on November 3, 2022 (infringement) and January 23, 2023 (invalidity), over six months before the Petition was filed.

In RPI Lenovo's case, the court likewise held its claim construction hearing on November 16, 2023, fact discovery closes in March 2024, and expert discovery closes in May 2024. Contentions were exchanged on January 5, 2023 (infringement) and on March 2, 2023 (invalidity). AXW-2018. As such, both the district court and the parties will have invested heavily in the district court actions prior to any institution decision. Intel has no response, except its aforementioned speculation that trial will be delayed—which does not bear on this factor.

Intel's lack of diligence further favors denial. Intel waited until just weeks before its one-year deadline to file its challenge, instead of "expeditiously" filing its Petition, "such as promptly after becoming aware of the claims being asserted." *Apple Inc. v. Fintiv, Inc.*, IPR2020-00019, Paper 11 at 11-12 (Mar. 20, 2020) (precedential) ("*Fintiv*").

Accordingly, this factor favors denial.

D. Factor 4 (Overlap) Undisputedly and Strongly Favors Denial

Intel does not dispute the extensive overlap between this IPR and the two district court cases. Pet. 78 (not even mentioning factor 4). Indeed, the grounds in this Petition are either identical to or variations of the invalidity challenges presented in the invalidity contentions for the Dell and Lenovo actions. For example, Petitioner's invalidity contentions in the Dell case assert combinations of the TGn Sync Proposals and the July 2005 WWiSE reference that are substantively identical to the proposed Hansen-July 2005 WWiSE and Hansen-July 2005 WWiSE-Choi grounds in the Petition. AXW-2023 (Dell Invalidity Contentions).

Further, Intel and its two named RPIs (Dell and Lenovo) have not offered any kind of stipulation to avoid duplicative proceedings. Accordingly, this factor undisputedly and strongly weighs in favor of denying institution under *Fintiv*.

E. Factor 5 Undisputedly Favors Denial

Petitioner Intel and RPIs Dell and Lenovo are undisputedly parties to, or at least participating in, the two Texas litigations. Accordingly, this factor favors denial. Pet. 78-79 (not challenging this factor, and admitting the Lenovo and Dell litigations are the relevant litigations).

Accordingly, this factor undisputedly favors denial.

F. Factor 6 (Other) Favors Denial

Other circumstances that favor denial are the merits and fairness. Neither one favors institution.

The merits of the Petition are weak for multiple reasons, as set forth in this preliminary response. As noted by the Director in *CommScope*, the standard for finding a compelling meritorious challenge "is a higher standard than the standard for institution set by statute." *CommScope Techs. LLC v. Dali Wireless, Inc.*, IPR2022-01242, Paper 23 at 3 (Feb. 27, 2023). Accordingly, even if the Board finds that Intel has established a reasonable likelihood of success, such a finding alone is not enough to warrant institution when balanced against the remaining *Fintiv* factors.

Accordingly, this factor favors denial.

* * *

The Board should deny institution under § 314(a) because all of the *Fintiv* factors favor, or strongly favor, denial.

VI. Conclusion

For the reasons set forth above, the Board should deny the Petition for *Inter Partes* Review.

Respectfully submitted,

Dated: November 17, 2023

By: / S. Giri Pathmanaban /

S. Giri Pathmanaban (Reg. No. 75,986)
giri.pathmanaban@lw.com
Latham & Watkins LLP
300 Colorado Street, Suite 2400
Austin, TX 78701-3295
Telephone: 737.910.7300
Fax: 737.910.7301

Counsel for Patent Owner
AX Wireless, LLC

CERTIFICATE OF COMPLIANCE WITH 37 C.F.R. § 42.24

I hereby certify that this Patent Owner's Preliminary Response complies with the word count limitation of 37 C.F.R. § 42.24(b) because the Patent Owner's Preliminary Response contains 13,620 words using Microsoft Word's counting feature, excluding the cover page, signature block, and the parts of the Patent Owner's Preliminary Response exempted by 37 C.F.R. § 42.24(b).

By: / S. Giri Pathmanaban /

S. Giri Pathmanaban (Reg. No. 75,986)
giri.pathmanaban@lw.com
Latham & Watkins LLP
300 Colorado Street, Suite 2400
Austin, TX 78701-3295
Telephone: 737.910.7300
Fax: 737.910.7301

Counsel for Patent Owner
AX Wireless, LLC

CERTIFICATE OF SERVICE

Pursuant to 37 C.F.R. § 42.6(e), I certify that on this 17th day of November, 2023, a true and correct copy of the foregoing **Patent Owner's Preliminary Response and all Exhibits** were served by electronic mail on Petitioner's lead and backup counsel at the following email addresses:

Lori A. Gordon (Reg. No. 50,633)
Perkins Coie LLP
700 Thirteenth St. NW, Suite 800
Washington, DC 20005
Gordon-ptab@perkinscoie.com
Tel.: 202.661.5883
Fax: 202.624.9543

Bryan S. Banks (Reg. No. 52,588)
Perkins Coie LLP
2901 North Central Avenue, Suite 2000
Phoenix, Arizona 85012
Banks-ptab@perkinscoie.com
Tel.: 602.351.8096
Fax: 602.648.7043

Jonathan R. Carter (Reg. No. 75,145)
Perkins Coie LLP
1155 Avenue of the Americas, 22nd Floor
New York, New York 10036
Carter-ptab@perkinscoie.com
Tel.: 212.261.6826
Fax: 212.977.1649

By: / S. Giri Pathmanaban /

S. Giri Pathmanaban (Reg. No. 75,986)
giri.pathmanaban@lw.com
Latham & Watkins LLP
300 Colorado Street, Suite 2400

Austin, TX 78701-3295
Telephone: 737.910.7300
Fax: 737.910.7301

Counsel for Patent Owner
AX Wireless, LLC