IEEE P802.11n™/D1.0
Draft Amendment to STANDARD [FOR] Information Technology-Telecommunications and information exchange between systems-Local and Metropolitan networks-Specific requirements-Part 11: Wireless LAN Medium Access Control (MAC) and Physical Layer (PHY) specifications: Enhancements for Higher Throughput

Prepared by the 802.11 Working Group of the 802 Committee

Copyright © 2006 the IEEE.
Three Park Avenue
New York, NY 10016-5997, USA
All rights reserved.

This document is an unapproved draft of a proposed IEEE Standard. As such, this document is subject to change. USE AT YOUR OWN RISK! Because this is an unapproved draft, this document must not be utilized for any conformance/compliance purposes. Permission is hereby granted for IEEE Standards committee participants to reproduce this document for purposes of international standardization consideration. Prior to adoption of this document, in whole or in part, by another standards development organization permission must first be obtained from the Manager, Standards Intellectual Property, IEEE Standards Activities Department. Other entities seeking permission to reproduce this document, in whole or in part, must obtain permission from the Manager, Standards Intellectual Property, IEEE Standards Activities Department.

IEEE Standards Activities Department
Manager, Standards Intellectual Property
445 Hoes Lane
Piscataway, NJ 08854, USA

Copyright © 2006 IEEE. All rights reserved.
This is an unapproved IEEE Standards Draft, subject to change.

AX Wireless, LLC
Exhibit AXW-2006
Intel v. AX Wireless
IPR2023-01137
AXW-2006-001

Abstract: This amendment defines modifications to both the 802.11 physical layers (PHY) and the 802.11 Medium Access Control Layer (MAC) so that modes of operation can be enabled that are capable of much higher throughputs, with a maximum throughput of at least 100Mbps, as measured at the MAC data service access point (SAP).
Keywords: Wireless LAN, Medium Access Control, Physical Layer, Radio, Multiple Input Multiple Output, MIMO, MIMO-OFDM, High Throughput

Copyright © 2006 IEEE. All rights reserved.
This is an unapproved IEEE Standards Draft, subject to change.

Introduction

(This introduction is not part of IEEE P802.11n/D1.0, Draft Amendment to Standard for Information Technology-Telecommunications and information exchange between systems-Local and Metropolitan networks-Specific requirements-Part 11: Wireless LAN Medium Access Control (MAC) and Physical Layer (PHY) specifications: Enhancements for Higher Throughput.)

Patents

Attention is called to the possibility that implementation of this Standard may require use of subject matter covered by patent rights. By publication of this Standard, no position is taken with respect to the existence or validity of any patent rights in connection therewith. The IEEE shall not be responsible for identifying patents or patent applications for which a license may be required to implement an IEEE standard or for conducting inquiries into the legal validity or scope of those patents that are brought to its attention.

Participants

At the time this draft Standard was completed, the 802.11 Working Group had the following membership:

Stuart J. Kerry, *Chair*

Al Petrick and **Harry Worstell,** *Vice-chairs*

Editorial Note: centered list of Task Group n officers and editors (from the start, if changes occurred) followed by a three column list of voting members of 802.11 on the day the draft was sent for sponsor ballot will be inserted

The following members of the balloting committee voted on this Standard. Balloters may have voted for approval, disapproval, or abstention.

Editorial Note: three-column list of responding sponsor ballot members will be inserted by IEEE staff

Copyright © 2006 IEEE. All rights reserved.
This is an unapproved IEEE Standards Draft, subject to change.

CONTENTS

1. Overview 2

2. Normative references....2

3. Definitions 2

4. Abbreviations and acronyms 3

5. General description....6

5.3 Logical Service Interfaces 8
5.4 Overview of the services 10
5.6 Relationship between services 10

6. MAC service definition 11

6.1 Overview of MAC services 11
6.2 Detailed service specification 13

7. Frame formats....13

7.1 MAC frame formats....14
7.2 Format of individual frame types....22
7.3 Management frame body components 35
7.4 Action frame format details 55
7.4A Aggregated MPDU frames 78
7.5 Frame usage 81

8. Security....81

8.1 Framework....81
8.2 Pre-RSNA security methods....81
8.3 RSNA data confidentiality protocols....82
8.4 RSNA security association management 82
8.5 Keys and key distribution 82
8.6 Mapping EAPOL keys to IEEE 802.11 keys....82
8.7 Per-frame pseudo-code 82
8.8 Security for HT STA 82

9. MAC sublayer functional description....82

9.1 MAC architecture 82
9.2 DCF 82
9.3 PCF....85
9.4 Fragmentation....85
9.5 Defragmentation 86
9.6 Multirate support 87

Copyright © 2006 IEEE. All rights reserved.
This is an unapproved IEEE Standards Draft, subject to change.

9.7 MSDU transmission restrictions 89
9.8 Operation across regulatory domains 89
9.9 HCF 89
9.10 Block Acknowledgment (Block Ack) 91
9.11 No Acknowledgment (No Ack) 97
9.12 Frame exchange sequences 97
9.13 Protection mechanism for non-ERP receivers 104
9.14 Protection mechanisms for different HT PHY options 105
9.15 L-SIG TXOP Protection 105
9.16 Protection mechanisms for Aggregation Exchange Sequences 107
9.17 Reverse direction 109
9.18 PSMP 111
9.19 Link Adaptation 117
9.20 Transmit Beamforming 119
9.21 Antenna Selection 125
9.22 Zero Length Frame as sounding frame 128
9.23 40/20 Functional description 129

10. Layer management 131

10.1 Overview of management model 131
10.2 Generic management primitives 131
10.3 MLME SAP interface 131
10.4 PLME SAP interface 140

11. MLME 142

11.1 Synchronization 142
11.2 Power management 143
11.3 Authentication and deauthentication 146
11.4 TS operation 146
11.5 Block Ack operation 149
11.6 Higher layer timer synchronization 149
11.7 DLS operation 149
11.8 TPC 149
11.9 DFS 149
11.10 Radio Measurement Procedures 150
11.11 Usage of the Neighbor Report 150
11.12 Link Measurement 150
11.13 Measurement pilot frame generation and usage 151
11.14 A-MPDU operation 151
11.15 40/20 MHz Operation 151
11.16 Phased Coexistence Operation 156

12. PHY service specification 158

13. PHY management 158

14. Frequency-Hopping spread spectrum (FHSS) PHY specification for the 2.4 GHz industrial, scientific, and medical (ISM) band 158

15. DSSS PHY specification for the 2.4 GHz band designated for ISM applications 159

Copyright © 2006 IEEE. All rights reserved.
This is an unapproved IEEE Standards Draft, subject to change.

16. Infrared (IR) PHY specification 159

17. Orthogonal frequency division multiplexing (OFDM) PHY specification for the 5 GHz band 159

18. High Rate direct sequence spread spectrum (HR/DSSS) PHY specification 159

19. ERP specification 159

20. High Throughput PHY specification 159

20.1 Introduction 159
20.2 High Throughput PHY specific service parameter list 161
20.3 High Throughput PLCP sublayer 168
20.4 High Throughput PLME 237
20.5 High Throughput PMD sublayer 242
20.6 Optional Features 253
20.7 Rate Dependent Parameters for High Throughput Modulation and Coding Schemes (MCS) 253

Annex A PICS 265

A.4 PICS proforma–IEEE Std 802.11, 2006 Edition[9] 265

Annex B 274

Annex C (normative) Formal description of MAC operation 275

C.3 State machines for MAC stations 275

Annex D (normative) ASN.1 encoding of the MAC and PHY MIB 276

Annex E 312

Annex F 313

Annex G 314

Annex H 315

Annex I 316

Annex J 317

Copyright © 2006 IEEE. All rights reserved.
This is an unapproved IEEE Standards Draft, subject to change.

Annex K 318

Annex L 319

Annex M 320

Annex N 321

Annex O 321

Annex P (normative) LDPC Matrix Definitions 323

Copyright © 2006 IEEE. All rights reserved.
This is an unapproved IEEE Standards Draft, subject to change.

Draft Amendment to STANDARD [FOR] Information Technology-Telecommunications and information exchange between systems-Local and Metropolitan networks-Specific requirements-Part 11: Wireless LAN Medium Access Control (MAC) and Physical Layer (PHY) specifications: Enhancements for Higher Throughpu

Editorial Note: Editorial Notes are distinguished like this. They are not part of the amendment and will be removed before it is published.

Editorial Note: This revision of the amendment is based on the following (baseline) documents:

a) ***P802.11 REV-ma D5.1***

b) ***802.11k D3.1***

c) ***802.11r D1.1***

The editing instructions contained in this amendment define how to merge the material contained herein into the existing base standard to form the new comprehensive standard. The editing instructions are shown in ***bold italic***. Three editing instructions are used: ***change***, ***delete***, and ***insert***. ***Change*** is used to make small corrections in existing text or tables. The editing instruction specifies the location of the change and describes what is being changed either by using ~~strikethrough~~ (to remove old material) or <u>underscore</u> (to add new material). ***Delete*** removes existing material. ***Insert*** adds new material without disturbing the existing material.

Editorial Note: Headings with empty contents are either there to provide context to the reader or to provide the correct numbering in the Word version of the draft.

Editorial Note: Equations are confined to clause 20, and are shown in the form "20-m". This is a valid form of numbering according to the Style Guide. This usage will be reconsidered prior to sponsor ballot.

Editorial Note: Except when referring to tables and figures that exist in the baseline, figure and table numbers are preceded by "n" and are assigned sequentially. This will be changed prior to sponsor ballot to the proper table numbers (e.g. 32AC) in their appropriate sequence.

Copyright © 2006 IEEE. All rights reserved.
This is an unapproved IEEE Standards Draft, subject to change.

1. Overview

2. Normative references

3. Definitions

Insert the following new definitions alphabetically, renumbering as necessary:

3.x Aggregate: A PSDU transported by the PHY with an aggregate attribute indicating that it contains multiple MPDUs.

3.x Downlink transmission time: a period of time described by a PSMP frame and which is intended to be used for the reception of frames by PSMP receivers.

3.x **HT STA**: A STA that supports the HT features as defined in TBD

3.x Initiator: A STA that holds a TXOP and transmits the first frame in a frame exchange sequence including aggregate PPDUs

3.x LongNAV: A MAC-layer protection mechanism that protects multiple PPDUs exchanged within a TXOP by setting a long NAV value and later resetting the NAV to make unused time available for re-use

3.x Mixed Mode: A mode of operation of an HT BSS in which there are co-channel non-HT devices present

3.x OFDM Format: Definition of subcarrier frequencies relative to the channel center frequency, and specification of data bearing and pilot subcarriers

3.x Phased Coexistence Operation: A BSS mode with alternating 20 MHz and 40 MHz phases controlled by a PCO AP

3.x Power Save Multi-Poll: MAC control frame that provides a time schedule to be used by the PSMP transmitter and PSMP receivers. The scheduled times begin immediately after to the transmission of the PSMP frame.

3.x Pure Mode: A mode of operation of a BSS in which there are no non-HT devices

3.x Receiver: Any STA receiving the current PPDU.

3.x Recipient: A STA that receives data directed to it using the Block ACK mechanism.

Copyright © 2006 IEEE. All rights reserved.
This is an unapproved IEEE Standards Draft, subject to change.

3.x Responder: A STA that transmits a frame in response to a frame received from an initiator during a frame exchange sequence that includes aggregates

3.x Sub-PSMP: a PSMP sequence that follows a SIFS interval after the current one.

3.x Uplink transmission: Period of time described by a PSMP frame and which is intended to be used for the transmission of frames by a PSMP receiver.

3.x Zero-length frame: A PPDU carrying a PSDU of zero-length

4. Abbreviations and acronyms

Insert the following new abbreviations and acronyms in alphabetical order:

ACK	Acknowledgement
AGC	Automatic Gain Control
AP	Access Point
AS	Antenna Selection
ASC	Antenna Selection Control
ASI	Antenna Selection Indication
CAP	Controlled Access Phase
CDD	Cyclic Delay Diversity
CRC	Cyclic Redundancy Check
CS	Cyclic Shift
CSD	Cyclic Shift Diversity
CSI	Channel State Information
CSIT	Channel State Information at the Transmitter
CTS	Clear to Send
DLP	Direct Link Protocol
DLT	Down Link Transmission

Copyright © 2006 IEEE. All rights reserved.
This is an unapproved IEEE Standards Draft, subject to change.

ECC	Error Correcting Code
EPP	Extended PHY Protection
ERP	Extended Rate PHY
FCS	Frame Check Sequence
FEC	Forward Error Correction
GF	Green Field
GI	Guard Interval
HC	Hybrid Controller
HT	High Throughput
HT-LTF	High Throughput Long Training Field
HT-SIG	High Throughput Signal Field
HT-STF	High Throughput Short Training Field
IE	Information Element
LDPC	Low Density Parity Check
LDPCC	Low Density Parity Check Codes
LLC	Logical Link Control
L-LTF	Non-HT Long Training Field
L-SIG	Non-HT Signal Field
L-STF	Non-HT Short Training Field
LTF	Long Training Field
MA	Management Action
MAC	Medium Access Controller
MCS	Modulation Coding Scheme – includes modulation order (BPSK, QPSK, 16-QAM, 64-QAM) and FEC code rate (1/2, 2/3, 3/4, 5/6)
MIMO	Multiple input, multiple output (Both transmitter and receiver have multiple antennas for signaling over a point-to-point link)
MISO	Multiple input, single output (transmitter has multiple antennas but receiver has a single antenna)
MM	Mixed Mode

Copyright © 2006 IEEE. All rights reserved.
This is an unapproved IEEE Standards Draft, subject to change.

MPDU	MAC protocol data unit
MRC	Maximum Ratio Combining (a technique to maximize received SNR using antenna signal combining).
MRQ	MCS Request
MSDU	MAC service data unit
MTBA	Multiple TID Block Ack
MTBAR	Multiple TID Block Ack Request
NAV	Network Allocation Vector (a MAC-level carrier-sense)
OFDM	Orthogonal Frequency Division Multiplexing
PAPR	Peak to Average Power Ratio
PCO	Phased Coexistence Operation
PHY	Physical Layer
PLCP	PHY layer convergence protocol
PPDU	PHY protocol data unit
PSDU	PHY service data unit
PSMP	Power Save Multi-Poll
QAP	QoS access point
QoS	Quality of service
QSTA	QoS station
RD	Reverse Direction
RDG	Reverse Direction Grant
RIFS	Reduced inter-frame spacing
RSSI	Receive Signal Strength Indicator
RTS	Request to send
RX	Receiver
SAP	Service Access Point
SF	Signal Field
SIFS	Short inter-frame spacing

Copyright © 2006 IEEE. All rights reserved.
This is an unapproved IEEE Standards Draft, subject to change.

SIMO	Single input, multiple output (transmitter has a single antenna, receiver has multiple antennas)
SISO	Single input, single output (both transmitter and receiver have a single antenna)
SNR	Signal to Noise Ratio
SRA	Single Receiver Aggregate – an aggregate that contains frames with the same receiver address.
STA	Station
STBC	Space-Time Block Code
STF	Short Training Field
SVD	Singular Value Decomposition: For an arbitrary matrix A = USVH
TBD	To be determined
TC	Traffic Category
TS	Traffic Stream
TSID	Traffic Stream Identifier
TSPEC	Traffic specification
TX	Transmitter
TxBF	Transmit Beamforming
TXOP	Transmission opportunity
ULT	Up Link Transmission
XOR	eXclusive OR
ZLF	Zero Length Frame

5. General description

5.2.7 HT STA

A HT STA supports HT features as identified in the PICS (Annex A).

As support is required for the QoS features, an HT STA is also a QSTA. The behavior specified for a QSTA also applies to an HT STA unless indicated otherwise.

Copyright © 2006 IEEE. All rights reserved.
This is an unapproved IEEE Standards Draft, subject to change.

5.2.7.1 PHY Enhancements Requiring MAC Signaling

Table n1 lists those PHY enhancements that need MAC level signaling. Use of these features is determined through the HT capabilities element.

Table n1 – PHY Enhancements Requiring MAC Negotiation

PHY enhancements	Comments
Supported MCS set	See PHY section for a list of MCSs.
Supported Channel Width	20 MHz only or 40/20 MHz channel support
Advanced Coding	Optional
Green Field	Optional
Beamforming	Optional
Short GI	Optional
STBC	Optional

5.2.7.2 General description of HT Features

The purpose of the HT features is to significantly improve throughput, providing a throughput of at least 100Mbps using mandatory features only, as measured at the MAC data service access point (SAP).

The HT MAC features defined by this amendment and required levels of support are defined in Table n2.

Table n2 – MAC Enhancements and Requires Levels of Support

HT Feature	Required Level of Support
A Frame Aggregation format that allows aggregation of multiple MPDUs in one PSDU. (A-MPDU)	Mandatory Recipient shall receive an A-MPDU aggregation that is not greater than the negotiated size. Minimum separation of MPDUs in an A-MPDU is negotiable (MPDU Density). Frames requiring an ACK can only be sent as a non-HT PPDU or an HT non-aggregate PPDU. Only single receiver address aggregation is supported.
A Frame aggregation format that allows aggregation of multiple MSDUs in one MPDU (A-MSDU)	Mandatory Recipient shall receive and deaggregate an A-MSDU. The recipient supports one of two maximum lengths at its option.
Block Ack Mechanism	Mandatory when A-MPDU is used. HT STAs shall support BlockAck.
N-Immediate BlockAck	Mandatory
N-Delayed BlockAck including No ACK on BlockAck/BlockAckReq	Optional
Compressed bitmap BlockAck	Mandatory
Implicit BlockAck request by asserting “Normal ACK” of an MPDU aggregated in PSDU	Mandatory at Recipient
Recipient Partial State	Mandatory under N-Immediate BlockAck
Security	Open and CCMP only
Long NAV reservation with CF-End for NAV release	Mandatory Receiver shall respect this type of protection.

Copyright © 2006 IEEE. All rights reserved.
This is an unapproved IEEE Standards Draft, subject to change.

PHY level spoofing	Mandatory. The length field of the L-SIG field of a mixed mode packet shall have a value equivalent to the duration of the current PPDU when L-SIG TXOP protection is not used.
MIMO power save	Mandatory to honor any MIMO power save notifications
Reduce MIMO capability	Mandatory to honor any Reduced MIMO capability notifications
Mechanisms to manage coexistence of 20 and 40 MHz channels.	Mandatory Both transmitter and receiver shall support
Channel management and channel selection methods.	Mandatory Both transmitter and receiver shall support
RIFS Protection	Mandatory
Green Field Protection	Mandatory
Power Save Multiple Poll	Support of PSMP is optional; however use of PSMP by AP is mandatory for Multiple RAs packet transmission with RIFS or SIFS to support PSMP capable STA. (See 9.18.1).
Multiple TID Block ACK	MTBA is the only BlockAck mechanism that shall be used during a PSMP sequence.
STBC Control Frames	STBC Control Frames allow STAs to associate beyond the non-STBC range.
L-SIG TXOP Protection	Optional TXOP protection through L-SIG.
PCO	Optional PCO is an optional BSS mode with alternating 20 MHz phase and 40 MHz phase controlled by PCO AP. A PCO capable STA may associate with the BSS as a PCO STA.
Transmit beamforming	Optional feature
Fast Link Adaptation	Optional MCS request and response
Implicit feedback	Optional request and response of Responder's sounding
CSI feedback	Optional request and response of CSI
ZLF sounding	Optional use of Zero Length frame as sounding frame
Calibration	Optional calibration support
Reverse Direction	Optional support of Responder's data transfer
Antenna Selection	Optional support of Antenna selection

5.2.8 HT STA

The IEEE 802.11 HT capabilities and features provide MAC and PHY enhancements to support LAN applications with high throughput requirements. The enhancements that distinguish HT STAs from non-HT STAs and HT APs from non-HT APs are collectively termed as the HT features. These HT features are listed in Annex A PICS in this amendment. Some of these HT features are mandatory, and some are optional. A STA with at least all the mandatory HT features is called a HT STA. Since the PICS also require support for the QoS features, an HT STA is also a QSTA.

5.3 Logical Service Interfaces

Change paragraph 3 of 5.3 as follows:

The complete set of IEEE 802.11 architectural services are as follows:

Copyright © 2006 IEEE. All rights reserved.
This is an unapproved IEEE Standards Draft, subject to change.

a) Authentication
b) Association
c) Deauthentication
d) Disassociation
e) Distribution
f) Integration
g) Data confidentiality
h) Reassociation
i) MSDU delivery
j) DFS
k) TPC
l) Higher layer timer synchronization (QoS facility only)
m) QoS traffic scheduling (QoS facility only)
n) Radio measurement
o) Link adaptation
p) Transmit beamforming
q) Antenna selection

5.3.1 SS

Change paragraph 3 of 5.3.1 as follows:

The SS is as follows:

a) Authentication
b) Deauthentication
c) Data confidentiality
d) MSDU delivery
e) DFS
f) TPC
g) Higher layer timer synchronization (QoS facility only)
h) QoS traffic scheduling (QoS facility only)
i) Radio measurement
j) Link adaptation
k) Transmit beamforming
l) Antenna selection

5.3.2 DSS

Copyright © 2006 IEEE. All rights reserved.
This is an unapproved IEEE Standards Draft, subject to change.

5.4 Overview of the services

Change paragraph 1 of 5.4 as follows:

There are many services specified by IEEE 802.11. Six of the services are used to support medium access control (MAC) service data unit (MSDU) delivery between STAs. Three of the services are used to control IEEE 802.11 LAN access and confidentiality. Three of the services are used to provide link management. Two of the services are used to provide spectrum management. One of the services provides support for LAN applications with QoS requirements. One of the services provides support for higher layer timer synchronization.

Insert the following new subclause after 5.4.8.2

5.4.9 Radio link management

Three services are provided to manage radio links and improve the link performance. These three services are link adaptation, transmit beamforming and antenna selection.

5.4.9.1 Link adaptation

Feedback based link adaptation allows the transmitter to select a modulation and coding scheme to optimize link performance. As the radio channel changes dynamically, the receiving STA provides feedback to the transmitting STA to allow the transmitting STA to select the modulation and coding scheme to maximize radio link performance.

5.4.9.2 Transmit beamforming

MIMO technology is used to meet the high throughput requirements. Combining transmit beamforming with MIMO can achieve higher throughput than basic MIMO at the same SNR, or conversely, higher range at the same data rate. Transmit beamforming provides robust link performance and improved system performance.

5.4.9.3 Antenna selection

Antenna selection is a possibly time-variant mapping of the signals at the RF chains onto a set of antenna elements, when the number of RF chains is smaller than the number of antenna elements at a STA. The mapping can be chosen based on instantaneous or averaged channel state information. It is a diversity technique to improve the link performance.

5.6 Relationship between services

a) Class 1 frames (permitted from within States 1, 2, and 3):

b) Class 2 frames (if and only if authenticated; allowed from within States 2 and 3 only):

Copyright © 2006 IEEE. All rights reserved.
This is an unapproved IEEE Standards Draft, subject to change.

c) Class 3 frames (if and only if associated; allowed only from within State 3):

Change the following paragraph as follows:

1) Data frames

i) Data subtypes: Data frames allowed. That is, either the "To DS" or "From DS" FC bits may be set to true to utilize the DSS.

ii) QoS data subtypes allowed to/from non-AP QSTA(s) that are associated with QAP(s).

iii) iii) Data frames between QSTAs in a QBSS with FC bits "To DS" and "From DS" both false.

iv) Zero length frame (ZLF)

Change the following paragraph as follows:

2) Management frames

i) Deauthentication: Deauthentication notification when in State 3 implies disassociation as well, changing the STA's state from 3 to 1. The station shall become authenticated again prior to another association.

ii) QoS, DLS and Block Ack Action

iii) Radio Measurement Action

iv) HT action frames

6. MAC service definition

6.1 Overview of MAC services

6.1.1 Data service

6.1.2 Security services

6.1.3 MSDU ordering

6.1.4 MSDU format

6.1.5 MAC data service architecture

Copyright © 2006 IEEE. All rights reserved.
This is an unapproved IEEE Standards Draft, subject to change.

Change the first two paragraphs of 6.1.5 as follows:

The MAC data plane architecture (i.e., processes that involve transport of all or part of an MSDU) is shown in Figure 18. During transmission, an MSDU goes through some or all of the following processes: A-MSDU aggregation, frame delivery deferral during power save mode, sequence number assignment, fragmentation, encryption, integrity protection, ~~and~~ frame formatting and A-MPDU aggregation. IEEE 802.1X may block the MSDU at the Controlled Port. At some point, the data frames that contain all or part of the MSDU are queued per AC/TS. This queuing may be at any of the three points indicated in Figure 18.

During reception, a received data frame goes through processes of possible A-MPDU de-aggregation, MPDU header and cyclic redundancy code (CRC) validation, duplicate removal, possible reordering if the Block Ack mechanism is used, decryption, defragmentation, integrity checking, and replay detection. After replay detection (or defragmentation if security is used) and possible A-MSDU de-aggreation, ~~the~~ one or more MSDUs ~~is~~ are delivered to the MAC_SAP or to the DS. The IEEE 802.1X Controlled/Uncontrolled Ports discard ~~the~~an MSDU if the Controlled Port is not enabled and if the MSDU does not represent an IEEE 802.1X frame. TKIP and CCMP MPDU frame order enforcement occurs after decryption, but prior to MSDU defragmentation; therefore, defragmentation will fail if MPDUs arrive out of order.

Copyright © 2006 IEEE. All rights reserved.
This is an unapproved IEEE Standards Draft, subject to change.

Change figure 18-MAC data plane architecture as follows:

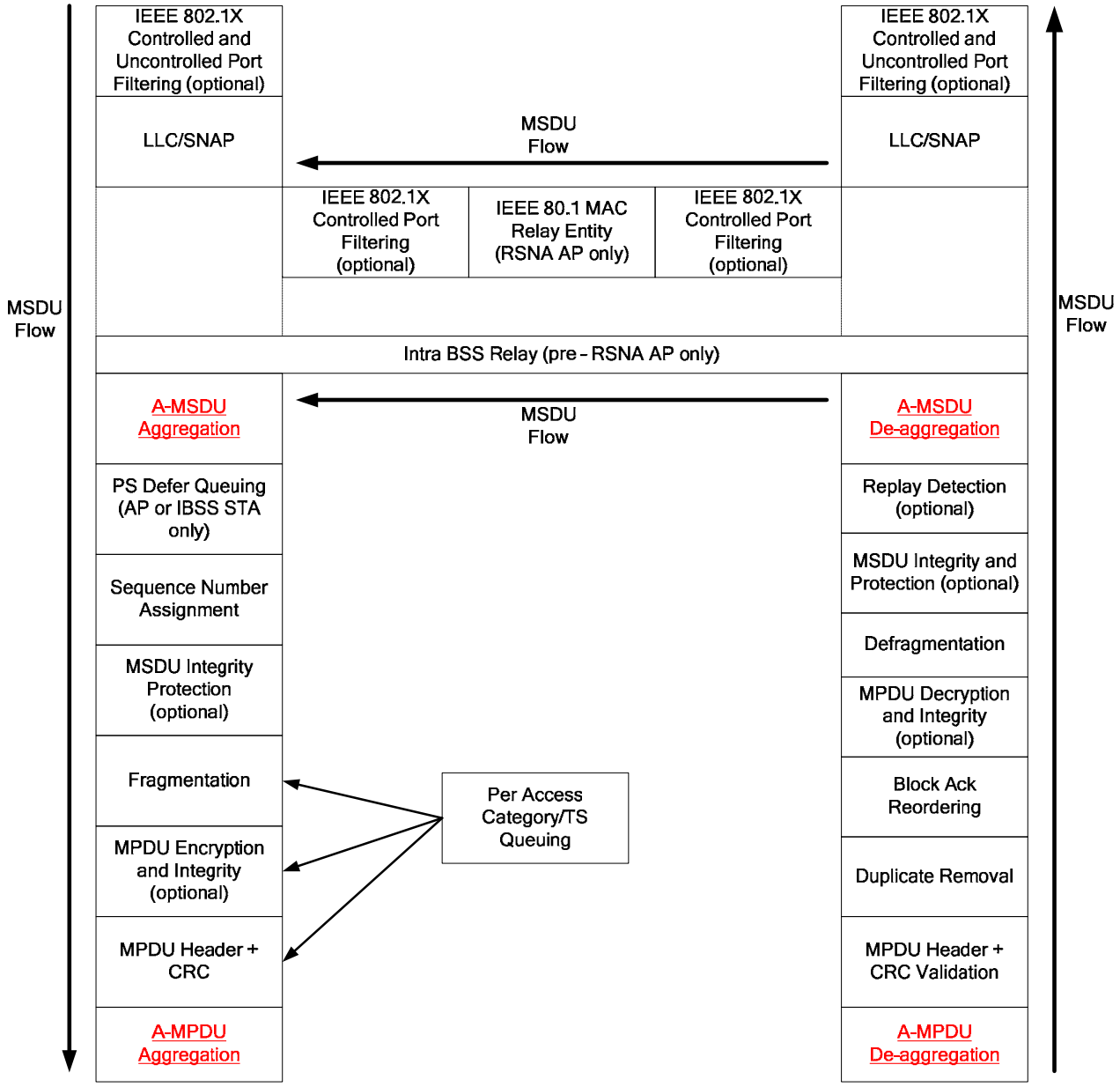

6.2 Detailed service specification

6.2.1 MAC data services

7. Frame formats

Copyright © 2006 IEEE. All rights reserved.
This is an unapproved IEEE Standards Draft, subject to change.

7.1 MAC frame formats

Change the text of 7.1 bullet a) as follows:

A MAC header, which comprises frame control, duration, address, and sequence control information, and, for QoS data frames, QoS control information (QoS Data Frames only) and HT control information (+HTC frames only);

7.1.1 Conventions

Insert the following just before the last paragraph:

An frame that contains the HT control field is referred to as a +HTC frame.

7.1.2 General frame format

Change the first paragraph of 7.1.2 as follows:

The MAC frame format comprises a set of fields that occur in a fixed order in all frames. Figure 19 depicts the general MAC frame format. The first three fields (Frame Control, Duration/ID, and Address 1) and the last field (FCS) in Figure 19 constitute the minimal frame format and are present in all frames, including reserved types and subtypes. The fields Address 2, Address 3, Sequence Control, Address 4, QoS Control, HT Control, and Frame Body are present only in certain frame types and subtypes. Each field is defined in 7.1.3. The format of each of the individual subtypes of each frame types is defined in 7.2. The components of management frame bodies are defined in 7.3. The formats of management frames of subtype Action are defined in 7.4

Replace Figure 19 – MAC frame format with the following figure:

Octets: 2	2	6	6	6	2	0 or 6	0 or 2	0 or 4	0-2324	4
Frame Control	Duration /ID	Address 1	Address 2	Address 3	Sequence Control	Address 4	QoS Control	HT Control	Frame Body	FCS
← MAC Header →										

Add the following paragraph after the figure and caption:

Under A-MPDU aggregation, defined in 7.4A, the PSDU transported by the PHY data service contains one or more frames. The format of an A-MPDU aggregated frame is the same as in the non-aggregated case.

Insert the following before the paragraph starting "The frame body…":

The HT Control Field appears last in the MAC Header, excluding any security fields.

Copyright © 2006 IEEE. All rights reserved.
This is an unapproved IEEE Standards Draft, subject to change.

7.1.3 Frame fields

7.1.3.1 Frame Control field

7.1.3.1.5 More Fragments field

Change 7.1.3.1.5 as follows:

The More Fragments field is 1 bit in length and is set to 1 in all data or management type frames that have another fragment of the current MSDU or current MMPDU to follow. <u>It is set to 0 in all frames exchanged between HT peers that are acknowledged using Block Ack.</u> It is set to 0 in all other frames.

7.1.3.1.10 Order field

Change the first paragraph of 7.1.3.1.10 as follows:

The Order field is 1 bit in length and is set to 1 in any non-QoS data frame that contains an MSDU, or fragment thereof, which is being transferred using the StrictlyOrdered service class. This field is set to 0 in all other frames. All <u>non-HT</u> QSTAs set this subfield to 0.

Insert the following at the end of the subclause:

The presence of the HT control field in frames carried in an HT PPDU is indicated by setting the order bit in the MAC header. The HT Control Field may be included in any frame except a non-QoS Data frame.

7.1.3.2 Duration/ID field

Insert the following at the end of the subclause:

The Duration fields in the MAC Headers of MPDUs in an aggregate shall all carry the same value.

7.1.3.3 Address Fields

7.1.3.4 Sequence Control Field

7.1.3.5 QoS Control Field

Insert the following sentence at the end of the first paragraph of 7.1.3.5

The presence of an A-MSDU in the Frame Body field is signaled by bit 7 in the QoS control field, as shown in Table 4.

Copyright © 2006 IEEE. All rights reserved.
This is an unapproved IEEE Standards Draft, subject to change.

Replace Table 4-Qos Control Field with the following table:

Table 4 – QoS Control Field

Applicable Frame (sub) Types	**Bits 0-3**	**Bit 4**	**Bit 5-6**	**Bit 7**	**Bits 8-15**
QoS CF-Poll and QoS CF-Ack+CF-Poll frames sent by HC	TID	EOSP	Ack Policy	Reserved	TXOP limit
QoS Data+CF-Poll and QoS Data+CF-Ack+CF-Poll frames sent by HC	TID	EOSP	Ack Policy	A-MSDU Present	TXOP limit
QoS Data and QoS Data+CF-Ack frames sent by HC	TID	EOSP	Ack Policy	A-MSDU Present	AP PS Buffer State
QoS Null and QoS CF-Ack frames sent by HC	TID	EOSP	Ack Policy	Reserved	AP PS Buffer State
QoS Data and QoS Data+CF-Ack frames sent by non-AP STAs	TID	0	Ack Policy	A-MSDU Present	TXOP duration requested
	TID	1	Ack Policy	A-MSDU Present	Queue size
QoS Null and QoS CF-Ack frames sent by non-AP STAs	TID	0	Ack Policy	Reserved	TXOP duration requested
	TID	1	Ack Policy	Reserved	Queue size

7.1.3.5.3 Ack Policy subfield

Modify the first non-header row of table 6 to appear as follows:

0	0	Normal Ack or implicit block ack. The addressed recipient returns an ACK or QoS +CF-Ack frame after a short interframe space (SIFS) period, according to the procedures defined in 9.2.8, 9.3.3 and 9.9.2.3 when this value is signaled in an MPDU which is not part of an A-MPDU. ~~The Ack Policy subfield is set to this value in all directed frames in which the sender requires acknowledgment.~~ For QoS Null (no data) frames, this is the only permissible value for the Ack Policy subfield. The addressed recipient returns a BA MPDU or MTBA MPDU, either individually or as part of an A-MPDU after a short interframe space (SIFS) period, according to the procedures defined in 9.2.8, 9.3.3 and 9.9.2.3 when this value is signaled in an MPDU which is part of an A-MPDU.

Copyright © 2006 IEEE. All rights reserved.
This is an unapproved IEEE Standards Draft, subject to change.

Modify the third non-header row of table 6 to appear as follows:

0	1	No explicit acknowledgment, or scheduled acknowledgement under MTBA/PSMP agreement. When used for "No explicit acknowledgement": There may be a response frame to the frame that is received, but it is neither the ACK nor any data frame of subtype +CF-Ack. For QoS CF-Poll and QoS CF-Ack+CF-Poll data frames, this is the only permissible value for the Ack Policy subfield. When used for "scheduled acknowledgement under MTBA/PSMP agreement": The acknowledgement for a frame indicating scheduled acknowledgement under MTBA/PSMP when it appears in a DLT is to be received in a subsequent ULT. The acknowledgement for a frame indicating scheduled acknowledgement under MTBA/PSMP when it appears in a ULT is to be received in a subsequent DLT.

7.1.3.5.6 TXOP Duration Requested subfield

Insert the following at the end of this subclause:

An HT STA may indicate the state of its transmit queues (either the number of bytes, or a requested TXOP duration) using the QoS control field. Under PSMP operation, if it receives an ULT that is not long enough to transmit data from its queues, it may transmit within the ULT a QoS Null containing information about the state of its transmit queues.

The HT AP may use this information to schedule a ULT in a Sub-PSMP

7.1.3.6 Frame Body field

7.1.3.7 FCS field

7.1.3.8 HT Control Field

The presence of the HT Control Field is a frame is determined by the Order bit of the Frame Control Field as defined in 7.1.3.1.10.

The format of the 4-octet HT Control Field is shown in Figure n1.

Copyright © 2006 IEEE. All rights reserved.
This is an unapproved IEEE Standards Draft, subject to change.

#	B0 B15	B16 17	B18 19	B20 B21	B22B23	B24	B25 B29	B30	B31
	Link Adaptation Control	Calibration Position	Calibration Sequence	Feedback request	CSI/ Steering	ZLF Announcement	Reserved	AC Constraint	RDG/More PPDU
# Bits	16	2	2	2	2	1	5	1	1

Figure n1 – HT Control field

	B0	B1	B2	B3 B5	B6 B8	B9 B15
	MA	TRQ	MRQ	MRS/ASI	MFS	MFB/ASC
# Bits	1	1	1	3	3	7

Figure n2 – Link Adaptation Control field

Subfields of the Link Adaptation Control field are defined in Table n3.

Table n3 – Link Adaptation Control Subfields

Field	Meaning	Definition
MA	MA payload	When the MA field is set to 1, the payload of the QoS Null Data frame is interpreted as a payload of management action frame. This is described in 7.2.2.2
TRQ	Sounding Request	'1' = Request to responder to transmit a sounding PPDU
MRQ	MCS Request	'1' = Request for MCS feedback
MRS	MRQ Sequence Identifier	Set by sender to any value in the range '000'-'110' to identify MRQ. Invalid if MRQ = '0'
MFS	MFB Sequence Identifier	Set to the received value of MRS. See note. Set to '111' for unsolicited MFB
MFB	MCS Feedback	Link adaptation feedback containing recommended MCS Default "all-ones" value indicates no feedback or not available

In each MCS Request (HT Control field containing MRQ set to 1) the sender includes a value for the MRS. The responder includes the received MRS value in the MFS field of the corresponding response frame. In the case of a delayed response, this allows the sender to correlate the MCS Feedback with the related MCS request. When the responder provides unsolicited MCS feedback, it sets MFS to '111'. When a responder responds immediately, but is unable to provide MCS feedback, it shall set MFB to "all-ones". When a responder is unable to provide an immediate response to MRQ and sets MFB to all-ones it also sets MFS to 111.

Table n4 – Antenna Selection Indication

Copyright © 2006 IEEE. All rights reserved.
This is an unapproved IEEE Standards Draft, subject to change.

ASI	Antenna Selection Indication	MRQ = ‘0’, and ASI = ‘111’ indicates antenna selection training.
ASC	Antenna Selection Control	When MRQ=’0’ and ASI=’111’, serves as ASC.

For antenna selection training the seven bits of the ASC subfield have the structure indicated in Figure n3 and Table n5.

	B9 B11	B12 B15
	Command	Data
# Bits	3	4

Figure n3 – ASC Subfield

Table n5 – The Command and Data Parts in ASC Subfield

Command (B9-B11)	**Meaning of Command**	**Data (B12-B15)**
000	Transmit Antenna Selection Sounding Indication (TXASSI)	Number of remaining sounding PPDUs (‘0000’-‘1111’)
001	Transmit Antenna Selection Sounding Request (TXASSR)	Reserved
010	Receive Antenna Selection Sounding Indication (RXASSI)	Number of remaining sounding PPDUs (‘0000’-‘1111’)
011	Receive Antenna Selection Sounding Request (RXASSR)	Total number sounding PPDUs required (‘0000’-‘1111’)
100	Sounding Label	Sequence number of the sounding PPDU corresponding to a CSI Matrices frame in AS feedback (‘0000’ - ‘1111’)
101	No feedback, AS training failure	Reserved
110-111	Reserved	Reserved

Copyright © 2006 IEEE. All rights reserved.
This is an unapproved IEEE Standards Draft, subject to change.

In the Transmit/Receive Antenna Selection Sounding Indication command, the value in the data field contains the remaining number of sounding frames following the current one, if a staggered sounding PPDU is used. The value in the data field contains the number of ZLFs following a non ZLF+ HTC, if ZLF sounding frame is used. The ZLF announcement bit in HT Control Field is set to indicate ZLF sounding.

The Calibration Position and Calibration Sequence fields are defined in Table n6.

Table n6 – Calibration Control Subfields

Field	Meaning	Definition
Calibration Position	Position in Calibration Sounding Exchange Sequence	00 = Default: Not a calibration frame. 01 = Calibration Start 10 = Sounding Response 11 = Sounding Complete
Calibration Sequence	Calibration Sequence Identifier	Incremented each time a new calibration procedure is started. The field is included in each frame within the calibration procedure and its value is unchanged for the frame exchanges during one calibration procedure.

The default value of the Calibration Position field when not in a Calibration Sounding Exchange sequence is ‘00’.

A frame in which the Calibration Position field is set to ‘10’ or ‘11’ must be transmitted in a sounding PPDU, i.e., the number of HT-LTFs must be equal to the number of transmit antennas.

The Calibration Sequence field is incremented each time the calibration procedure is started between any two STAs. The field is included in each frame within the calibration procedure and its value is unchanged for the frame exchanges during the entire calibration procedure.

The Feedback Request field contains position of the feedback: Immediate Feedback means SIFS after PPDU that contains Request; Aggregated means feedback aggregated with any other response in the same TxOP; Unsolicited Feedback means that the feedback may be sent in the TxOP obtained by the Responder**.**

Table n7 – Feedback request

Field	Meaning	Definition
Feedback request	Position of the CSI feedback	00 – No request 01 – Unsolicited feedback only 10 – Immediate feedback 11 – Aggregated feedback

Copyright © 2006 IEEE. All rights reserved.
This is an unapproved IEEE Standards Draft, subject to change.

Table n8 – CSI/Steering

Field	Meaning	Definition
CSI/Steering	Type of feedback	00 – CSI 01 – uncompressed Steering Matrix 10 – compressed Steering Matrix 11 – Reserved

Table n9 – ZLF Announcement

Field	Meaning	Definition
ZLF Announcement	The ZLF Announcement indicates that a ZLF will be transmitted after the frame (according to the rules described in section 9.22).	0 – no ZLF will follow 1 – ZLF will follow

The RDG/More PPDU Field of the HT Control field is interpreted differently when transmitted by an initiator or a responder. Third party STA do not need to interpret this bit.

Table n10 – RDG/More PPDU

RDG/More PPDU Value	In frame transmitted by Initiator	In frame transmitted by responder
0	No reverse grant	The PPDU carrying the frame is the last transmission by the responder.
1	A reverse grant is present, as defined by the Duration/ID field.	The PPDU carrying the frame is followed by another PPDU.

Table n11 – AC Constraint

AC Constraint Field Value	Description
0	The response may contain data from any TID
1	The response may contain data only from the same AC as the last Data received from the initiator

7.1.4 Duration/ID field in data and management frames

Change the second unbulleted paragraph in 7.1.4 as follows:

Within all data or management frames sent in a CP by the QSTAs outside of a controlled access phase (CAP) <u>and outside of a PSMP TXOP</u>, following a contention access of the channel, the Duration/ID field is set to one of the following values:

Copyright © 2006 IEEE. All rights reserved.
This is an unapproved IEEE Standards Draft, subject to change.

Change item c) of 7.1.4 as follows:

c) ~~The minimum~~Either of

Add the following new text to the end of the subclause:

Within all frames sent within a PSMP TXOP by the STA which generated the PSMP TXOP or by a STA which has been granted a DLT or ULT within the PSMP TXOP, to ensure NAV protection for the entire PSMP TXOP, the Duration/ID field is set to:

— The remaining duration of the PSMP TXOP.

7.2 Format of individual frame types

7.2.1 Control frames

7.2.1.1 RTS frame format

7.2.1.2 CTS frame format

7.2.1.3 ACK frame format

7.2.1.4 PS-Poll frame format

7.2.1.5 CF-End frame format

7.2.1.6 CF-End+CF-Ack frame format

7.2.1.7 Block Ack Request (BlockAckReq) frame format

In Figure 30 BlockAckReq frame, change the name of the field "Block Ack Starting Sequence Control" to "Block Ack Request Information"

Replace Figure 31 with the following figure:

B0	B1	B2	B3 B11	B12 B15
ACK policy	MTID	Compressed BA	Reserved	TID_INFO
Bits: 1	1	1	9	4

Figure 31 – BAR Control field

Copyright © 2006 IEEE. All rights reserved.
This is an unapproved IEEE Standards Draft, subject to change.

Delete all text and figures following Figure 31.

Insert the following text and table following Figure 31:

The Ack Policy subfield of the BAR control field has the same meaning as defined in 7.2.1.8.

The values of the MTID and Compressed BA fields determine which of three possible BlockAckReq frame variants is represented, as indicated in the following table:

Table n12 – BAR frame variant encoding

MTID	Compressed BA	BAR frame variant	Comments
0	0	Simple BlockAckReq	
0	1	Compressed BlockAckReq	No fragmentation
1	0	Reserved	
1	1	Multi-TID BlockAckReq	No fragmentation

The meaning of the TID_INFO subfield of the BAR Control field depends on the BAR frame variant type. The meaning of this subfield is explained within the subclause for each of the BAR frame variants.

The meaning of the Block Ack Request Information field depends on the BAR frame variant type. The meaning of this field is explained within the subclause for each of the BAR frame variants.

The frame control field, Duration/ID field, RA field, TA field and FCS field have identical meanings and uses for each of the BAR frame variants.

7.2.1.7.1 Simple Block Ack Request (Simple BlockAckReq)

The frame control field, Duration/ID field, RA field, TA field and FCS field for the Simple Block Ack Request frame have the same meaning as defined in subclause 7.2.1.7.

The Ack Policy subfield of the BAR control field of the Simple BlockAckReq frame has the same meaning as defined in 7.2.1.8.

The MTID subfield of the BAR control field of the Simple BlockAckReq frame has the value 0.

The Compressed BA subfield of the BAR control field of the Simple BlockAckReq frame has the value 0 and has the same meaning as defined in 7.2.1.8.

The reserved subfield of the BAR control field of the Simple BlockAckReq frame has the value of all zeros upon transmission and is ignored upon reception.

The TID_INFO subfield of the BAR Control field of the Simple BlockAckReq frame contains the TID for which a BlockAck frame is requested.

The Block Ack Request Information within the Simple BlockAckReq frame comprises the Block Ack Starting Sequence Control field, as shown in Figure n4. The Starting Sequence number subfield is the sequence number of the first MSDU for which this BlockAckReq is sent. The Fragment Number subfield is always set to 0.

Copyright © 2006 IEEE. All rights reserved.
This is an unapproved IEEE Standards Draft, subject to change.

B0 B3	B4 B15
Fragment number (0)	Starting Sequence Number
Bits: 4	12

Figure n4 – Block Ack Starting Sequence Control field

7.2.1.7.2 Block Ack Request (BlockAckReq) frame format (compressed)

The frame control field, Duration/ID field, RA field, TA field and FCS field for the Compressed Block Ack Request frame have the same meaning as defined in subclause 7.2.1.7.

The Ack Policy subfield of the BAR control field of the Compressed BlockAckReq frame has the same meaning as defined in 7.2.1.8.

The MTID subfield of the BAR control field of the Compressed BlockAckReq frame has the value 0.

The Compressed BA subfield of the BAR control field of the Compressed BlockAckReq frame has the value 1 and has the same meaning as defined in 7.2.1.8.

The reserved subfield of the BAR control field of the Compressed BlockAckReq frame has the value of all zeros upon transmission and is ignored upon reception.

The TID_INFO subfield of the BAR Control field of the Compressed BlockAckReq frame contains the TID for which a BlockAck frame is requested.

The Block Ack Request Information field within the Compressed BlockAckReq frame comprises the Block Ack Starting Sequence Control field, as shown in Figure 32. The Starting Sequence number subfield is the sequence number of the first MSDU for which this BlockAckReq is sent. The Fragment Number subfield is always set to 0.

7.2.1.7.3 Multiple TID Block Acknowledgement Request

The frame control field, Duration/ID field, RA field, TA field and FCS field for the Multiple TID Block Ack Request frame have the same meaning as defined in subclause 7.2.1.7.

The Ack Policy subfield of the BAR control field of the Multiple TID BlockAckReq frame has the same meaning as defined in 7.2.1.8.

The MTID subfield of the BAR control field of the Multiple TID BlockAckReq frame has the value 1.

The Compressed BA subfield of the BAR control field of the Multiple TID BlockAckReq frame has the value 1 and has the same meaning as defined in 7.2.1.8.

The reserved subfield of the BAR control field of the Multiple TID BlockAckReq frame has the value of all zeros upon transmission and is ignored upon reception.

The TID_INFO subfield of the BAR Control field of the Multiple TID BlockAckReq frame contains the number of TIDs present in the MTBAR as given by TID_INFO + 1, i.e. a value of 2 in the TID_INFO field

Copyright © 2006 IEEE. All rights reserved.
This is an unapproved IEEE Standards Draft, subject to change.

means that there are 3 TID values present in the Multiple TID Block Acknowledgement Request frame's Block Ack Request Information field.

The Block Ack Request Information field of the Multiple TID BlockAckReq frame comprises multiple sets of per TID info fields and BA Starting Sequence Control fields, as shown in Figure n5. The Per TID Info field is shown in figure n7. The Starting Sequence Control subfield is shown in Figure 32. The Starting sequence subfield contains the sequence number of the first MSDU for which this BlockAckReq is sent. The Fragment Number subfield is always set to 0.

Octets:	2	2
	Per TID Info	Block Ack Starting Sequence Control Field

Repeat for each TID

Figure n5 – MTBAR Block Ack Request Information field format

The Per TID info subfield in is shown in detail below:

Bits	B0 B11	B12 B15
	Reserved	TID Value

Figure n6 – PER TID Info Field

7.2.1.8 Block Ack (BlockAck) frame format

In Figure 33 BlockAck frame, merge the fields "Block Ack Starting Sequence Control field" and "Block Ack Bitmap" and name the new merged field as "Block Ack Information"

Replace the existing BA control field diagram (figure 34) with the following diagram:

B0	B1	B2	B3 B11	B12 B15
ACK policy	MTID	Compressed BA	Reserved	TID_INFO
Bits: 1	1	1	9	4

Figure 34 – BA Control field

Copyright © 2006 IEEE. All rights reserved.
This is an unapproved IEEE Standards Draft, subject to change.

Delete all text and figures and editor's instructions following Figure 34.

Insert the following text and tables following Figure 34:

The ACK Policy subfield has the meaning shown in Table n11.

Table n13 – Ack Policy Field in BlockAckReq and BlockAck for N-Delayed BlockAck

Bits	Meaning
Bit 0	
0	Normal acknowledgement. The addressee returns an ACK, Block Ack, Block Ack (compressed) or MTID Block Ack, as appropriate. The Ack Policy field is set to this value in all directed Block Ack Request, Block Ack Request (compressed), MTID Block Ack Request, ~~and~~ Block Ack, Block Ack (compressed) and MTID Block Ack frames in which the sender requires immediate acknowledgement.
1	No Acknowledgement The addressee sends no immediate response upon receipt of the frame. The Ack Policy is set to this value in all Block Ack Req, Block Ack Request (compressed), MTID Block Ack Request, ~~and~~ Block Ack, Block Ack (compressed) and MTID Block Ack frames in which the sender does not require immediate explicit acknowledgement.

The values of the MTID and Compressed BA fields determine which of three possible BlockAck frame variants is represented, as indicated in the following table:

Table n14 – BA frame variant encoding

MTID	Compressed BA	BA frame variant	Comments
0	0	Simple BlockAck	
0	1	Compressed BlockAck	No fragmentation
1	0	Reserved	
1	1	Multi-TID BlockAck	No fragmentation

The meaning of the TID_INFO subfield of the BA Control field depends on the BA frame variant type. The meaning of this subfield is explained within the subclause for each of the BA frame variants.

The meaning of the Block Ack Information field depends on the BA frame variant type. The meaning of this field is explained within the subclause for each of the BA frame variants.

The frame control field, Duration/ID field, RA field and TA field have identical meanings and uses for each of the BA frame variants.

Copyright © 2006 IEEE. All rights reserved.
This is an unapproved IEEE Standards Draft, subject to change.

7.2.1.8.1 Simple Block Ack (Simple BlockAck)

The frame control field, Duration/ID field, RA field, TA field and FCS field for the Simple Block Ack frame have the same meaning as defined in subclause 7.2.1.8.

The Ack Policy subfield of the BA control field of the Simple BlockAck frame has the same meaning as defined in 7.2.1.8.

The MTID subfield of the BA control field of the Simple BlockAck frame has the value 0.

The Compressed BA subfield of the BA control field of the Simple BlockAck frame has the value 0 and has the same meaning as defined in 7.2.1.8.

The reserved subfield of the BA control field of the Simple BlockAck frame has the value of all zeros upon transmission and is ignored upon reception.

The TID_INFO subfield of the BA Control field of the Simple BlockAck frame contains the TID for which a BlockAck frame is requested.

The Block Ack Information field within the Simple BlockAck frame comprises the Block Ack Starting Sequence Control field and the Block Ack Bitmap, as shown in Figure n8. The format of the Block Ack Starting Sequence Control Field is shown in figure 32 in subclause 7.2.1.7.1. The Starting Sequence number subfield is the sequence number of the first MSDU for which this BlockAck is sent, and is set to the same value as in the immediately previously received BlockAckReq frame. The Fragment Number subfield is always set to 0.

Octets: 2	128
Block Ack Starting Sequence Control Field	Block Ack Bitmap

Figure n8 – Simple Block Ack Information field format

The Block Ack Bitmap field is 128 octets in length and is used to indicate the receiving status of up to 64 MSDUs. Bit position n of the Block Ack bitmap, if set to 1, acknowledges receipt of an MPDU with an MPDU sequence control value equal to (Block Ack Starting Sequence Control + n). Bit position n of the Block Ack bitmap, if set to 0, indicates that an MPDU with MPDU sequence control value equal to (Block Ack Starting Sequence Control + n) has not been received. For unused fragment numbers of an MSDU, the corresponding bits in the bitmap are set to 0.

7.2.1.8.2 Block Ack (BlockAck) frame format (compressed)

The frame control field, Duration/ID field, RA field, TA field and FCS field for the Compressed Block Ack frame have the same meaning as defined in subclause 7.2.1.8.

The BlockAck of compressed format is mandatory for all HT devices.

BlockAck negotiated between HT STAs shall always use the compressed format.

A block ack agreement established between two HT peers using Delayed BlockAck policy is referred to as an N-Delayed BlockAck.

Copyright © 2006 IEEE. All rights reserved.
This is an unapproved IEEE Standards Draft, subject to change.

A block ack agreement established between two HT peers using Immediate BlockAck policy is referred to as an N-Immediate BlockAck.

The ACK policy field in BlockAckReq and BlockAck is only defined for N-Delayed BlockAck. It is reserved under N-Immediate BlockAck.

The Ack Policy subfield of the BA control field of the Compressed BlockAck frame has the same meaning as defined in 7.2.1.8.

The MTID subfield of the BA control field of the Compressed BlockAck frame has the value 0.

The Compressed BA subfield of the BA control field of the Compressed BlockAck frame has the value 1 and has the same meaning as defined in 7.2.1.8.

The reserved subfield of the BA control field of the Compressed BlockAck frame has the value of all zeros upon transmission and is ignored upon reception.

The TID_INFO subfield of the BA Control field of the Compressed BlockAck frame contains the TID for which a BlockAck frame is requested.

The Block Ack Information field within the Compressed BlockAck frame comprises the Block Ack Starting Sequence Control field and the Block Ack bitmap, as shown in Figure n7. The Starting Sequence number subfield is the sequence number of the first MSDU for which this BlockAck is sent, and is set to the same value as in the immediately previously received BlockAckReq frame. The Fragment Number subfield is always set to 0.

Octets: 2	8
Block Ack Starting Sequence Control Field	Block Ack Bitmap

Figure n7 – Compressed Block Ack Information field format

The Block Ack bitmap within the Compressed BlockAck frame contains an 8-octet compressed Block Ack Bitmap, as indicated by the value 1 in the Compressed BA field of the BA Control field. Each bit which is set in the compressed Block Ack Bitmap acknowledges the successful reception of a single MSDU in the order of sequence number with the first bit of the Block Ack Bitmap corresponding to the MSDU with the sequence number which matches the Block Ack Starting Sequence Control Field Starting Sequence Number subfield value.

7.2.1.8.3 Multiple TID Block Acknowledgement

The frame control field, Duration/ID field, RA field, TA field and FCS field for the Multiple TID Block Ack frame have the same meaning as defined in subclause 7.2.1.8.

The Ack Policy subfield of the BA control field of the Multiple TID BlockAck frame has the same meaning as defined in 7.2.1.8.

The MTID subfield of the BA control field of the Multiple TID BlockAck frame has the value 1.

The Compressed BA subfield of the BA control field of the Multiple TID BlockAck frame has the value 1 and has the same meaning as defined in 7.2.1.8.

Copyright © 2006 IEEE. All rights reserved.
This is an unapproved IEEE Standards Draft, subject to change.

The reserved subfield of the BA control field of the Multiple TID BlockAck frame has the value of all zeros upon transmission and is ignored upon reception.

The TID_INFO subfield of the BA Control field of the Multiple TID BlockAck frame contains the number of copies of the Block Ack Starting Sequence Control field and Block Ack bitmap present in the MTBA as given by TID_INFO + 1, i.e. a value of 2 in the TID_INFO field means that there are 3 copies of the Block Ack Starting Sequence Control field and Block Ack bitmap values present in the Multiple TID Block Acknowledgement frame's Block Ack Information field. The TID_INFO value contains the TID_INFO value from the corresponding BlockAckRequest frame.

The Block Ack Information field within the Multiple TID BlockAck frame comprises 1 or more copies of the Block Ack Starting Sequence Control field and the Block Ack bitmap, as shown in Figure n11. The number of copies of the Block Ack Starting Sequence Control field and the Block Ack bitmap which appear in the MTID Block Ack frame's Block Ack Information field is indicated by the TID_INFO field of the BA Control field. The Starting Sequence number subfield is the sequence number of the first MSDU for which this BlockAck is sent, and is set to the same value as in the immediately previously received BlockAckReq frame. The Fragment Number subfield is always set to 0. The first set of Block Ack Starting Sequence Control Field and Block Ack Bitmap that is transmitted corresponds to the lowest TID value, with subsequent sets following in increasing TID value order.

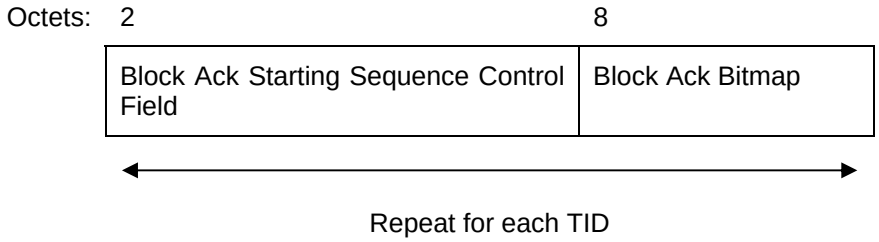

Figure n8 – MTID Block Ack Information field format

The Block Ack bitmap within the MTID BlockAck frame contains an 8-octet compressed Block Ack Bitmap, as indicated by the value 1 in the Compressed BA field of the BA Control field. Each bit which is set in the compressed Block Ack Bitmap acknowledges the successful reception of a single MSDU in the order of sequence number with the first bit of the Block Ack Bitmap corresponding to the MSDU with the sequence number which matches the Block Ack Starting Sequence Control Field Starting Sequence Number subfield value.

7.2.2 Data frames

Insert the following new section at the 7.2.2.

Replace figure 35-Data frame with the following:

Octets: 2	2	6	6	6	2	0 or 6	0 or 2	0 or 4	0-2324	4
Frame Control	Duration /ID	Address 1	Address 2	Address 3	Sequence Control	Address 4	QoS Control	HT Control	Frame Body	FCS

Copyright © 2006 IEEE. All rights reserved.
This is an unapproved IEEE Standards Draft, subject to change.

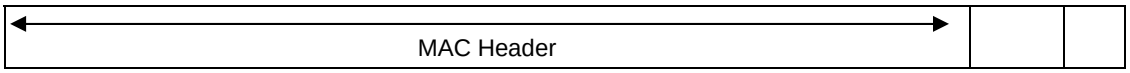

Insert the following after the para containing "The QoS Control field is defined in 7.1.3.5***.":***

The setting of the Order field determines whether the HT Control field is present, as specified in 7.1.3.1.10. The HT Control field is defined in 7.1.3.8.

7.2.2.1 Aggregated MSDU Format (A-MSDU)

This section defines the format of Aggregated MSDU (A-MSDU). The purpose of the A-MSDU is to allow multiple MSDUs being sent to the same receiver to be aggregated and sent in a single MPDU. This improves the efficiency of the MAC layer, particularly when there are many small MSDUs such as TCP acknowledgement. Support for A-MSDU is mandatory at the receiver. However, the transmitter is free to use A-MSDU or not based on information such as traffic characteristics and link conditions.

An A-MSDU is a sequence of A-MSDU sub-frames as shown in Figure n9. Each sub-frame consists of a sub-frame header followed by an MSDU and 0-3 bytes of padding as shown in Figure n10. Each sub-frame (except the last) is padded so that its length is a multiple of 4 bytes. The last sub-frame has no padding.

The sub-frame header contains three fields: Destination Address (DA), Source Address (SA), and Length. [1] The DA and SA fields are interpreted as defined in Table n15. The length field contains the length in bytes of the MSDU.

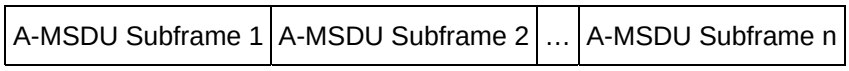

Figure n9 - A-MSDU structure

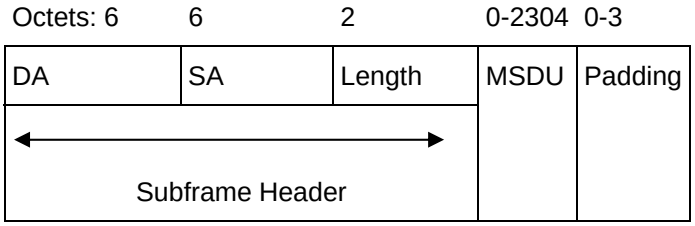

Figure n10 - A-MSDU subframe structure

The MPDU containing the A-MSDU is one of the QoS data subtypes. The A-MSDU structure is contained in the Frame Body field of the MPDU. The MPDU is treated as a regular MPDU and is encrypted as a single unit under CCMP.

The DA and SA are passed between the MAC and its service client in the MAC service primitives. The mapping of DA, SA to the addresses in the MPDU header is described by Table n15. It is possible to have

[1] Note, these fields are arranged in the same order as the 802.3 frame format.

Copyright © 2006 IEEE. All rights reserved.
This is an unapproved IEEE Standards Draft, subject to change.

different DA and SA in subframe headers of the same A-MSDU as long as they all map to the same receiver address.

Table n15 – Address fields for unicast MPDU containing A-MSDU

To DS	From DS	Address 1	Address 2	Address 3	Address 4
0	0	DA	SA	BSSID	X
0	1	DA	BSSID	BSSID	X
1	0	BSSID	SA	BSSID	X
1	1	RA	TA	BSSID	BSSID
NOTE—X = not present					

After A-MSDU aggregation, the A-MSDU is transported in the Frame Body of a QoS Data frame using one of the QoS Data subtypes that support this format (shown in Table n6).

The A-MSDU lifetime is defined by the maximum lifetime of its constituent MSDUs. An A-MSDU may be transmitted until its lifetime expires or it is received correctly at the receiver.

NOTE 1—This implicitly allows an MSDU which is a constituent of an A-MSDU to potentially be transmitted after the expiration of its lifetime.

A STA shall not transmit an A-MSDU to a peer that exceeds its peer's Maximum A-MSDU Length capability.

NOTE 2—The presence of A-MSDU aggregation does not alter the maximum size of MSDU transported by the MA-UNITDATA primitives (see 6.2).

7.2.2.2 QoS Null Embedding of Management Action

A QoS Null + HTC frame with the MA field of the HT Control Field set to 1 carries a Management Action frame payload. In this case, the Ack Policy field of the QoS Control field shall be either Normal Ack or No Ack.

The TSID field is undefined in this case.

The payload shall not be fragmented.

The sequence number is undefined.

Octets: 2	2	6	6	6	2	0 or 6	2	4	2-2318	4
Frame Control	Duration / ID	Address 1	Address 2	Address 3	Sequence Control	Address 4	QoS Control	High Throughput Control	Management Action Body	FCS

Figure n11 - QoS Null envelope carrying Management Action Body

Copyright © 2006 IEEE. All rights reserved.
This is an unapproved IEEE Standards Draft, subject to change.

Octets: 1	1	Variable
Category	Action Value	Frame Specific

Figure n12 - Management Action Body

NOTE—this mechanism may be used to embed channel state feedback in an aggregate as part of an aggregate exchange sequence. 9.19.4 explains in details using of this format for Explicit feedback.

7.2.3 Management frames

7.2.3.1 Beacon frame format

Insert the following text at the end of Section 7.2.3.1:

If the dot11HTCapabilityImplemented attribute is true, a STA shall include a HT Capability information element in the transmission of Beacon frames. In addition, the AP in an infrastructure BSS shall also include the Additional HT Information Element. The HT Capabilities information element and the Additional HT Information element are included in the order shown in Table 8.

Add the following additional rows in Table 8 and renumber the Vendor Specific IE to 33:

Order	Information	Notes
30	HT Capabilities	The HT Capabilities information element shall be present when dot11HTCapabilityImplemented attribute is true
31	Additional HT Information	The Additional HT Information element shall be included by an AP when dot11HTCapabilityImplemented attribute is true
32	Extension Channel Offset	New Extension Channel Offset element may be present if dot11SpectrumManagementRequired is true and the BSS/IBSS is 40/20MHz capable

7.2.3.2 IBSS ATIM frame format

7.2.3.3 Disassociation frame format

7.2.3.4 Association Request frame format

Insert the following text at the end of Section 7.2.3.4:

Copyright © 2006 IEEE. All rights reserved.
This is an unapproved IEEE Standards Draft, subject to change.

If the dot11HTCapabilityImplemented attribute is true, a STA shall include a HT Capability information element in the transmission of Association Request frames.

Add the following additional row in Table 10 and renumber the Vendor Specific IE to 16:

Order	Information	Notes
15	HT Capabilities	The HT Capabilities information element shall be present when dot11HTCapabilityImplemented attribute is true

7.2.3.5 Association Response frame format

Insert the following text at the end of Section 7.2.3.5:

If the dot11HTCapabilityImplemented attribute is true, a STA shall include a HT Capability information element in the transmission of Association Response frames. In addition, the AP in an infrastructure BSS shall also include the Additional HT Information Element. The HT Capabilities information element and the Additional HT Information element are included in the order shown in Table 11.

Add the following additional rows in Table 11 and renumber the Vendor Specific IE to 17:

Order	Information	Notes
15	HT Capabilities	The HT Capabilities information element shall be present when dot11HTCapabilityImplemented attribute is true
16	Additional HT Information	The Additional HT Information element shall be included by an AP when dot11HTCapabilityImplemented attribute is true

7.2.3.6 Reassociation Request frame format

Insert the following text at the end of Section 7.2.3.6:

If the dot11HTCapabilityImplemented attribute is true, a STA shall include a HT Capability information element in the transmission of Reassociation Request frames.

Add the following additional row in Table 12 and renumber the Vendor Specific IE to 17:

Order	Information	Notes
16	HT Capabilities	The HT Capabilities information element shall be present when dot11HTCapabilityImplemented attribute is true

Copyright © 2006 IEEE. All rights reserved.
This is an unapproved IEEE Standards Draft, subject to change.

7.2.3.7 Reassociation Response frame format

Insert the following text at the end of Section 7.2.3.7:

If the dot11HTCapabilityImplemented attribute is true, a STA shall include a HT Capability information element in the transmission of Reassociation Response frames. In addition, the AP in an infrastructure BSS shall also include the Additional HT Information Element. The HT Capabilities information element and the Additional HT Information element are included in the order shown in Table 13.

Add the following additional rows in Table 13 and renumber the Vendor Specific IE to 17:

Order	Information	Notes
15	HT Capabilities	The HT Capabilities information element shall be present when dot11HTCapabilityImplemented attribute is true
16	Additional HT Information	The Additional HT Information element shall be included by an AP when dot11HTCapabilityImplemented attribute is true

7.2.3.8 Probe Request frame format

Insert the following text at the end of Section 7.2.3.8:

If the dot11HTCapabilityImplemented attribute is true, a STA shall include a HT Capability information element in the transmission of Probe Request frames.

Add the following additional row in Table 14 and renumber the Vendor Specific IE to 7:

Order	Information	Notes
6	HT Capabilities	The HT Capabilities information element shall be present when dot11HTCapabilityImplemented attribute is true

7.2.3.9 Probe Response frame format

Insert the following text at the end of Section 7.2.3.9:

If the dot11HTCapabilityImplemented attribute is true, a STA shall include a HT Capability information element in the transmission of Probe Response frames. In addition, the AP in an infrastructure BSS shall also include the Additional HT Information Element. The HT Capabilities information element and the Additional HT Information element are included in the order shown in Table 15.

Copyright © 2006 IEEE. All rights reserved.
This is an unapproved IEEE Standards Draft, subject to change.

Add the following additional rows in Table 15 and renumber the Vendor Specific IE to 30 and the Requested IEs to 31-n:

Order	Information	Notes
27	HT Capabilities	The HT Capabilities information element shall be present when dot11HTCapabilityImplemented attribute is true
28	Additional HT Information	The Additional HT Information element shall be included by an AP when dot11HTCapabilityImplemented attribute is true
29	New Extension Channel Offset	New Extension Channel Offset element may be present if dot11SpectrumManagementRequired is true and the BSS/IBSS is 40/20MHz capable

7.2.3.10 Authentication frame format

7.2.3.11 Deauthentication

7.2.3.12 Action frame format

7.3 Management frame body components

7.3.1 Fields that are not information elements

7.3.1.1 Authentication Algorithm Number field

7.3.1.2 Authentication Transaction Sequence Number field

7.3.1.3 Beacon Interval field

7.3.1.4 Capability Information field

7.3.1.5 Current AP Address field

7.3.1.6 Listen Interval field

7.3.1.7 Reason Code field

Copyright © 2006 IEEE. All rights reserved.
This is an unapproved IEEE Standards Draft, subject to change.

7.3.1.8 AID field

7.3.1.9 Status Code field

7.3.1.10 Timestamp field

7.3.1.11 Action field

Insert the High Throughput category code assigned by the 802.11 ANA replacing the TBD below.

Insert the following row (ignoring the header row) in Table 24 – Category Values in the correct position to preserve ordering by the "Code" column and update the "Reserved" range of codes appropriately.

Code	Meaning	See subclause
TBD	High Throughput	7.4.7

7.3.1.12 Dialog Token field

7.3.1.13 DLS Timeout Value field

7.3.1.14 Block Ack Parameter Set field

Change the second paragraph of 7.3.1.14 as follows:

The Block Ack Policy subfield is set to 1 for immediate Block Ack and 0 for delayed Block Ack. The Block Ack Policy subfield value assigned by the originator of the QoS data frames is advisory for an ADDBA setup between a non-HT QSTA. The Block Ack Policy subfield value set to 1 by the originator is not advisory for an ADDBA setup between HT STAs and the recipient shall set the Block Ack Policy subfield value to 1 in its ADDBA response.

Change the fourth paragraph of 7.3.1.14 as follows:

The Buffer Size subfield indicates the number of buffers ~~of size 2304 octets available~~ for this particular TID for a QSTA.21 Each buffer is capable of holding a maximum MSDU or A-MSDU supported by the STA.

Insert the following new paragraph at the end of 7.3.1.14:

Fragmentation is not supported under compressed BlockAck. The ADDBA Buffer Size subfield contains the number of buffers at the receiver. In an ADDBA request frame, the Buffer Size subfield is advisory and the Recipient sets up this number sending the ADDBA response.

Copyright © 2006 IEEE. All rights reserved.
This is an unapproved IEEE Standards Draft, subject to change.

7.3.1.15 Block Ack Timeout Value field

7.3.1.16 DELBA Parameter Set field

7.3.1.17 QoS Info field

7.3.2 Information elements

Insert the Element IDs assigned by the 802.11 ANA replacing the TBDs below.

Insert the following two rows (ignoring the header row) in Table 26 – Element IDs in the correct position to preserve ordering by the "Element ID" column and update the "Reserved" range of codes appropriately.

Information Element	Element ID
HT Capabilities	TBD
Additional HT Information Elements	TBD
New Extension Channel Offset element	TBD

7.3.2.1 SSID element

7.3.2.2 Supported Rates element

7.3.2.3 FH Parameter Set element

7.3.2.4 DS Parameter Set element

7.3.2.5 CF Parameter Set element

7.3.2.6 TIM

7.3.2.7 IBSS Parameter Set element

Copyright © 2006 IEEE. All rights reserved.
This is an unapproved IEEE Standards Draft, subject to change.

7.3.2.8 Challenge Text element

7.3.2.9 Country information element

7.3.2.10 Hopping Pattern Parameters information element

7.3.2.11 Hopping Pattern Table information element

7.3.2.12 Request information element

7.3.2.13 ERP Information element

7.3.2.14 Extended Supported Rates element

7.3.2.15 Power Constraint element

7.3.2.16 Power Constraint element

7.3.2.17 TPC Request element

7.3.2.18 TPC Report element

7.3.2.19 Supported Channels element

7.3.2.20 Channel Switch Announcement element

Add the following subclause after 7.3.2.20:

7.3.2.20A New Extension Channel Offset element

The New Extension Channel Offset element is used by an AP in a BSS or a STA in an IBSS together with Channel Switch Announcement element when changing to a new 40MHz channel. The format of the New Extension Channel Offset element is shown in Figure n13.

	Element ID	Length	New Extension Channel offset
Octets	1	1	1

Copyright © 2006 IEEE. All rights reserved.
This is an unapproved IEEE Standards Draft, subject to change.

Figure n13 - New Extension Channel Offset element format

The Length field shall be set to 1.

New Extension Channel offset represents the position of the extension channel relative to the control channel. The New Extension Channel offset set to 1 means that the extension channel is above the control channel; a value 3 represents extension channel below the control channel; value 0 indicates that no extension channel is present.

The New Extension Channel Offset element is included in Channel Switch Announcement frames, as described in 7.4.1.5, and may be included in Beacon frames, as described in 7.2.3.1, and Probe Response frames, as described in 7.2.3.9.

7.3.2.21 Measurement Request element

7.3.2.21.1 Basic request

7.3.2.21.2 CCA request

7.3.2.21.3 RPI histogram request

7.3.2.22 Measurement Report element

7.3.2.22.1 Basic report

7.3.2.22.2 CCA report

7.3.2.22.3 RPI histogram report

7.3.2.23 Quiet element

7.3.2.24 IBSS DFS element

7.3.2.25 RSN information element

7.3.2.25.1 Cipher suites

7.3.2.25.2 AKM suites

Copyright © 2006 IEEE. All rights reserved.
This is an unapproved IEEE Standards Draft, subject to change.

7.3.2.25.3 RSN capabilities

7.3.2.25.4 PMKID

7.3.2.26 Vendor Specific information element

7.3.2.27 QBSS Load element

7.3.2.28 EDCA Parameter Set element

7.3.2.29 TSPEC element

In table 39 (Access Policy subfield) replace the Reserved row with the following:

Bit7	Bit 8	Usage
0	0	PSMP

Insert the following text after table 39.

Under PSMP Access policy, the Ack policy of the TS Info field shall be set to Block Acknowledgment, which indicates use of MTBA during PSMP.

7.3.2.30 TCLAS element

7.3.2.31 TS Delay element

7.3.2.32 TCLAS Processing element

7.3.2.33 Schedule element

7.3.2.34 QoS Capability element

7.3.2.46 Fast BSS transition EAPOL-Key information element (EAPKIE)

Insert the following new subclause

7.3.2.47 HT Capabilities

Copyright © 2006 IEEE. All rights reserved.
This is an unapproved IEEE Standards Draft, subject to change.

7.3.2.47.1 HT Capability element

An HT STA declares that it is an HT STA by transmitting an HT Capabilities element.

The HT Capabilities field shall be present in any frame containing a supported rates element.

Support for optional HT features is declared through the HT Capabilities element.

The HT Capability element contains a number of subfields that are used to advertise optional HT capabilities of an HT device. The length of this element is not fixed to allow extension. The size of this element depends on the number of fields that are included. Additional fields may be described in later revisions of this standard, but the fields will always appear in the order shown, with new fields appearing at the end of the existing fields. STA which find a length which exceeds the sum total of the lengths of the fields of which they are aware shall ignore the fields beyond their knowledge. The HT Capability element is present in beacons, association and re-association request frames and in probe response frames. The HT Capability element is defined in Figure n14.

Octets:	1	1	2	1	16	2	4	1
	Element ID	Length (26)	HT Capabilities Info	MAC HT Parameters Info	Supported MCS set	Extended HT Capabilities Info	TxBF capabilities	AS capabilities

Figure n14 – HT Capability element format

Insert the Element ID assigned by the 802.11 ANA below and in figure n17 – HT Capability element format.

HT Capability Element ID = (TBD)

7.3.2.47.2 HT Capabilities Info field

The HT Capabilities Info field is 2 octets in length, and contains capability information bits

B0	B1	B2-B3	B4	B5	B6	B7	B8-B9
Advanced coding capability	Supported channel width set	MIMO Power Save	Green Field	Short GI for 20 MHz	Short GI for 40 MHz	Tx STBC	Rx STBC

B10	B11	B12	B13	B14	B15
Delayed BlockAck	Maximum A-MSDU length	DSSS/CCK mode in 40 MHz mode	PSMP support	STBC Control Frame support	L-SIG TXOP Protection support

Copyright © 2006 IEEE. All rights reserved.
This is an unapproved IEEE Standards Draft, subject to change.

Figure n15 – HT Capabilities Info field

The subfields of the HT Capabilities Info field are defined in Table n16.

Table n16 - Subfields of the HT Capabilities Info field

Subfield	Definition
Advanced coding capability	The advanced coding capability field indicates support for advanced coding if its value is 1.
Supported channel width set	Indicates which channel widths the STA supports. 0 for a device only capable of 20MHz operation 1 for a device capable of both 20MHz and 40MHz operation.
MIMO power save	Indicates whether the STA is operating MIMO power save (see 11.2.3.1). 00 Static MIMO power save mode (the STA is not capable of receiving any MIMO PPDU) 01 Dynamic MIMO power save mode (the STA requires a non-MIMO wakeup PPDU before it can receive a MIMO PPDU) 10 Reserved 11 MIMO enabled (no restrictions on what may be sent to the STA)
Green field	The GF field indicates ability to receive frames with Green Field preamble 0 device is not able to receive PPDUs with GF preamble 1 device is able to receive PPDUs with GF preamble
Short GI for 20 MHz	The Short GI for 20 MHz field indicates Short GI support for 20 MHz packets 0 not supported 1 supported
Short GI for 40 MHz	The Short GI for 40 MHz field indicates Short GI support for 40 MHz packets 0 not supported 1 supported
Tx STBC	The Tx STBC field indicates support STBC by transmitter 0 not supported

Copyright © 2006 IEEE. All rights reserved.
This is an unapproved IEEE Standards Draft, subject to change.

<table>
<tr><td></td><td>1 supported</td></tr>
<tr><td>Rx STBC</td><td>The Rx STBC field indicates support STBC by receiver.
<table>
<tr><th>B8-B9</th><th>Meaning</th></tr>
<tr><td>00</td><td>No Rx STBC support</td></tr>
<tr><td>01</td><td>Rx support of one spatial stream</td></tr>
<tr><td>10</td><td>Rx support of one and two spatial streams</td></tr>
<tr><td>11</td><td>Rx support of one, two and three spatial streams</td></tr>
</table></td></tr>
<tr><td>N-Delayed BlockAck</td><td>Indicates support for N-Delayed BlockAck:

0 device does not support N-Delayed BlockAck

1 device supports N-Delayed BlockAck</td></tr>
<tr><td>Maximum A-MSDU length</td><td>Maximum A-MSDU length – 0- 3839 bytes, 1- 7935 bytes</td></tr>
<tr><td>DSSS/CCK mode in 40MHz</td><td>DSSS/CCK rates in 40 MHz capable BSS.

In beacon and probe response

0 - BSS does not allow use of DSSS/CCK rates – No ERP IE shall be signaled in this mode. The AP shall not include DSSS/CCK rates in the Supported Rates IE. Only HT compatible Stations shall be associated, and non-HT devices shall not be associated. The beacon shall be sent using an OFDM basic rate.

1- BSS does allow use of DSSS/CCK rates. Non-HT devices may be associated.

In association request

0-device will not use DSSS/CCK rates

1-device will use DSSS/CCK rates.

The HT STA with this field 1 in association request shall be not associated with BSS that contains 0 in beacon or probe response.</td></tr>
<tr><td>PSMP support</td><td>In beacon and probe response

0 BSS does not support use of PSMP

1 BSS does support use of PSMP

In association request and re-association request

0 device does not support PSMP operation</td></tr>
</table>

Copyright © 2006 IEEE. All rights reserved.
This is an unapproved IEEE Standards Draft, subject to change.

	1 device does support PSMP operation
STBC control frame support	Indicates whether STBC control frames are supported: **In beacon and probe response** 0 BSS does not support STBC Control frames 1 BSS does support STBC Control frames **In association request** 0 device does not support STBC control frames 1 device does support STBC control frames
L-SIG TXOP protection support	Indicates support for the L-SIG TXOP protection mechanism (see 9.15) 0 not supported 1 supported

7.3.2.47.3 MAC HT parameters Info field

B0 B1	B2 B4	B5 B7
Maximum Rx A-MPDU Factor	MPDU density	Reserved

Figure n16 – MAC HT Parameters Info field

The subfields of the MAC HT parameters Info field are defined in Table n17.

Copyright © 2006 IEEE. All rights reserved.
This is an unapproved IEEE Standards Draft, subject to change.

Table n17 - Subfields of the MAC HT parameters Info field

Subfield	Definition
Maximum Rx A-MPDU Factor	Indicates the maximum length of A-MPDU that the STA can receive. The Maximum Rx A-MPDU defined by this field is equal to $2^{13+\text{Maximum Rx PSDUFactor}}$ bytes. Maximum Rx A-MPDU Factor is a value between 0 and 3.
MPDU density	Determines the minimum time between the start of adjacent MPDUs within an A-MPDU. This time is measured at the PHY_SAP; the number of bytes between the start of two consecutive MPDUs in A-MPDU shall be equal or greater than MPDU-density*PHY-bit-rate/8. 000- no restriction 001- 1/8 μsec 010- 1/4 μsec 011- 1/2 μsec 100- 1 μsec 101- 2 μsec 110- 4 μsec 111- 8 μsec

7.3.2.47.4 Supported MCS set field

This field indicates which MCSs a STA supports. B0 to B76 indicate support of MCS values 0 to 77. When a bit is set to 1, the corresponding MCS is supported. When a bit is set to 0, the corresponding MCS is not supported.

NOTE—An HT STA includes mandatory MCS values in its supported MCS set field.

Octet:	0	9	10	15
Bit:	B0	B76 B77 B79	B80	B127
	Indicates supported MCS if set to 1	Reserved	Reserved	

Figure n17 – Supported MCS set field

Copyright © 2006 IEEE. All rights reserved.
This is an unapproved IEEE Standards Draft, subject to change.

7.3.2.47.5 Extended HT Capabilities Info field

Bit: B0	B1 B2	B3 B7	B8 B9	B10 B15
PCO	Transition Time	Reserved	MCS feedback	Reserved

Figure n18 – Extended HT Capabilities Info field

The subfields of the Extended HT Capabilities Info field are defined in Table n18.

Table n18 – Subfields of the Extended HT Capabilities Info field

Subfield	Definition
PCO	Indicates support for PCO 0 not supported 1 supported A PCO capable AP sets this field to 1 to indicate that it can operate its BSS as PCO BSS. A PCO capable STA sets this field to 1 to indicate that it can operate as a PCO STA when the Transition Time field in its Extended HT Capabilities Info field meets the intended transition time of PCO AP.
Transition Time	Indicates that the STA can switch between 20 MHz channel width and 40 MHz channel width within the specified time with high probability. The value contained in the operating transition time bits of AP is dynamic - the value of these bits may change at any time during the lifetime of the association of any STA. AP/STA may stay on 40 MHz channel width to transmit 20 MHz frames in 20 MHz phase. **Transition Time field** / **Description** 00 / Reserved 01 / 400 us 10 / 1.5 ms 11 / 5 ms

Copyright © 2006 IEEE. All rights reserved.
This is an unapproved IEEE Standards Draft, subject to change.

Subfield	Definition
MCS feedback	Indicates the capability of the STA to provide MCS feedback

MCS Feedback Field	Description
00	STA does not provide MCS Feedback
01	Reserved
10	STA provides only unsolicited MCS Feedback.
11	STA can provide MCS Feedback in response to MRQ as well as unsolicited MCS Feedback

7.3.2.47.6 Transmit Beamforming Capability

The TxBF Capability field is defined in Figure n19.

B0	B1	B2	B3	B4	B5	B6 B7	B8	B9
TxBF capable	Receive staggered sounding capable	Transmit staggered sounding capable	Receive ZLF capable	Transmit ZLF capable	Implicit TxBF capable	Calibration	Explicit CSI TxBF capable	Explicit uncompressed steering matrix capable

B10 B12	B13 B15	B16 B18	B19 B20	B21 B22	B23 B24	B25 B31
Explicit BF CSI feedback	Explicit uncompressed Steering Matrix feedback	Explicit compressed Steering Matrix feedback	CSI number of beamformer antennae	Uncompressed steering matrix of beamformer antennae	Compressed steering matrix of beamformer antennae	Reserved

Copyright © 2006 IEEE. All rights reserved.
This is an unapproved IEEE Standards Draft, subject to change.

Figure n19 – TxBF Capability Field

TxBF Capability Field	Encoding	Definition
Tx Beamforming capable	0 incapable 1 capable	Indicates whether or not this STA wants to receive steered frame
Receive staggered sounding capable	0 incapable 1 capable	Indicates whether or not this STA can receive staggered sounding frames.
Transmit staggered sounding capable	0 incapable 1 capable	Indicates whether or not this STA can transmit staggered sounding frames per TRQ.
Receive ZLF capable	0 incapable 1 capable	Indicates whether or not this receiver can interpret ZLF frames as sounding frames.
Transmit ZLF capable	0 incapable 1 capable	Indicates whether or not this STA can transmit ZLF frames as sounding frames.
Implicit TxBF capable	0 incapable 1 capable	Indicates whether or not this STA can apply Implicit transmit beamforming.
Calibration	00 incapable 01 limited capability of being involved in calibration, but cannot apply reciprocity correction vector received from initiator, and cannot initiate calibration 10 limited capability of being involved in calibration, cannot apply reciprocity correction vector received from initiator, but can initiate calibration 11 Fully capable	Indicates that the STA can participate in a calibration procedure initiated by another STA, that is capable of generating an immediate response Sounding PPDU, and can provide a MIMO Channel Measurement Report in response to the receipt of a Sounding PPDU. Also indicates the capability of applying reciprocity correction vector received from initiator of calibration sequence When 'Implicit TxBF capable' bit sets to 1, this field shall be 11.
Explicit CSI TxBF capable	0 incapable 1 capable	Indicates whether or not this STA can apply transmit beamforming using CSI explicit feedback in its transmission
Explicit uncompressed Steering Matrix capable	0 incapable 1 capable	Indicates whether or not this STA can apply transmit beamforming using uncompressed steering matrix explicit feedback in its transmission

Copyright © 2006 IEEE. All rights reserved.
This is an unapproved IEEE Standards Draft, subject to change.

TxBF Capability Field	**Encoding**	**Definition**
Explicit BF CSI feedback	000 incapable 001 unsolicited feedback capable 010 immediate feedback capable 100 aggregated feedback capable	Indicates whether or not this receiver can return CSI explicit feedback. Any combination of those 3 bits is allowed
Explicit uncompressed Steering Matrix feedback	000 incapable 001 unsolicited feedback capable 010 immediate feedback capable 100 aggregated feedback capable	Indicates whether or not this receiver can return uncompressed Steering Matrix explicit feedback. Any combination of those 3 bits is allowed
Explicit compressed Steering Matrix feedback	000 incapable 001 unsolicited feedback capable 010 immediate feedback capable 100 aggregated feedback capable	Indicates whether or not this STA can apply transmit beamforming using explicit compressed Steering Matrix feedback. The STA shall be able both to compress and to use a compressed steering matrix on its transmission for TXBF. Any combination of those 3 bits is allowed
CSI number of beamformer antennae support	00 support single TX antenna sounding 01 support 2 TX antenna sounding 10 support 3 TX antenna sounding 11 support 4 TX antenna sounding	The maximum number of beamformer antennae the beamformee can support when CSI feedback is required

Copyright © 2006 IEEE. All rights reserved.
This is an unapproved IEEE Standards Draft, subject to change.

TxBF Capability Field	Encoding	Definition
Uncompressed steering matrix number of beamformer antennae support	00 support single TX antenna sounding 01 support 2 TX antenna sounding 10 support 3 TX antenna sounding 11 support 4 TX antenna sounding	The maximum number of beamformer antennae the beamformee can support when uncompressed steering matrix feedback is required
Compressed steering matrix number of beamformer antennae support	00 support single TX antenna sounding 01 support 2 TX antenna sounding 10 support 3 TX antenna sounding 11 support 4 TX antenna sounding	The maximum number of beamformer antennae the beamformee can support when compressed steering matrix feedback is required

7.3.2.47.7 Antenna Selection Capability

The AS Capability field is defined in Figure n20 where setting a bit indicates the corresponding AS capability

B0	B1	B2	B3	B4	B5	B6	B7
Antenna Selection Capable	Explicit CSI feedback based TX AS capable	Antenna indices feedback based TX AS capable	Explicit CSI feedback capable	Antenna indices feedback capable	RX AS capable	Transmit sounding PPDUs capable	Reserved

Copyright © 2006 IEEE. All rights reserved.
This is an unapproved IEEE Standards Draft, subject to change.

Figure n20 – Antenna Selection Capability Field

Antenna Selection Capability Field	Encoding	Definition
Antenna Selection capable	0 incapable 1 capable	Indicates whether or not this STA supports Antenna Selection
Explicit CSI feedback based TX AS capable	0 incapable 1 capable	Indicates whether or not this STA has TX AS capability based on explicit CSI feedback
Antenna indices feedback based TX AS capable	0 incapable 1 capable	Indicates whether or not this STA has TX AS capability based on antenna indices feedback
Explicit CSI feedback capable	0 incapable 1 capable	Indicates whether or not this STA can compute CSI and feedback to support the peer to do AS
Antenna indices feedback based TX AS capable	0 incapable 1 capable	Indicates whether or not this STA can conduct antenna indices selection computation and feedback the results to support the peer to do AS
RX AS capable	0 incapable 1 capable	Indicates whether or not this STA has RX AS capability
Transmit sounding PPDUs capable	0 incapable 1 capable	Indicates whether or not this STA can transmit sounding PPDUs for AS training per request

Insert the following new subclause.

7.3.2.48 Additional HT Information Elements

The AP controls the operation of HT STA in its BSS using the Additional HT Information Elements element. The structure of this element is defined in Figure n20. The length of this element is not fixed to allow extension. The size of this element depends on the number of fields that are included. Additional fields may be described in later revisions of this standard, but the fields will always appear in the order shown, with new fields appearing at the end of the existing fields. STA which find a length which exceeds the sum total of the lengths of the fields of which they are aware shall ignore the fields beyond their knowledge.

Insert the Element ID assigned by the 802.11 ANA

Copyright © 2006 IEEE. All rights reserved.
This is an unapproved IEEE Standards Draft, subject to change.

Octets:	1	1	1	1				
Bit:				B0 B1	B2	B3	B4	B5 B7
	Element ID	Length (>=22)	Control Channel	Extension Channel Offset	Recomm-ended transmis-sion Width Set	RIFS mode	Controlled access only	Service Interval Granularity

2			2							16
B0 B1	B2	B3 B15	B0 B6	B7	B8	B9	B10	B11	B12 B15	
Operating Mode	Non-GF Devices Present	Reserved	Basic STBC MCS	Dual STBC protection	Secondary beacon	L-SIG TXOP Protection Full Support	PCO active	PCO phase	Reserved	Basic MCS set

Figure n21 – Additional HT Information element format

Element ID (TBD).

The fields of the Additional HT Information Elements are defined in Table n18.

Table n19 – Additional HT Information Elements

Field	Description	Use
Control Channel	Channel number of the control 20MHz channel (1 byte)	In a mixed mode, all broadcast and non-aggregated control frames are sent so that they can be received by a non-HT device operating on the control channel.
Extension Channel Offset	Values: 01= extension channel above the control channel 11= extension channel below the control channel 00= indicates no extension channel is present.	To locate the 40MHz channel in combination with the control channel
Recommended transmission channel Width	Values: 0 = use 20 MHz channel (control) 1= use any channel width enabled under Supported channel width set	Defines the channel widths that may be used by STA under related Supported Channel Width Set.

Copyright © 2006 IEEE. All rights reserved.
This is an unapproved IEEE Standards Draft, subject to change.

Field	Description	Use
Operating Mode	00= Pure HT, no protection 01= there may be non-HT devices in both the control and the extension channel, protection is optional in BSS 10 = No non-HT STA is associated in the BSS, however, at least one 20MHz HT STA is associated. Transmissions in 40MHz channel shall be protected in this 20/40 MHz capable BSS. 11 =Mixed: no non-HT STA is associated with this BSS, protection shall be used in the BSS. Transmission in 40MHz channel as well as transmission of HT devices in 20Mhz channel shall be protected in 20/40 MHz capable BSS	Beacon is always sending in non-HT mode
Basic MCS set	An MCS set contains a bitmap of size 128 bits. Bit 0 maps to MCS 0. A bit is set to indicate support for that MCS.	Present in Beacon/Probe Response frames to indicate what MCS values shall be supported by all devices in the BSS. Non-HT basic rates shall be used if this field is zeroed.
STBC Basic MCS	Any single STBC MCS	Present in Beacon/Probe Response frames to indicate what MCS shall be used for STBC control frames and STBC Beacon
RIFS mode	0= Use of RIFS prohibited, 1=Use of RIFS permitted.	The AP shall set this parameter to 1 if there are no APSD non-HT devices associated, otherwise this parameter shall be set to 0.
Controlled Access Only	0 = not only PSMP 1= PSMP only	Indicates whether an AP will accept association requests from PSMP capable STAs only NOTE—The QAP may support a BSS allowing PSMP access only. This approach may allow separation of multimedia and data oriented BSSs. If the QAP supports PSMP access only it may assert the Controlled Access Only bit. The PSMP aware STA may decide to associate or not with such a BSS thereby possibly shortening its scanning time.

Copyright © 2006 IEEE. All rights reserved.
This is an unapproved IEEE Standards Draft, subject to change.

Field	Description	Use
Service Interval Granularity	000 – 5ms 001 – 10ms 010 – 15ms 011 – 20ms 100 – 25ms 101 – 30ms 110 – 35ms 111 – 40 ms	Size in us of the shortest Service Interval. Size of the actual Service interval that STA is requesting shall be multiples of this value; used under scheduled PSMP only
Dual CTS Protection	0 = Regular use of RTS/CTS 1 = Dual CTS protection is used	Dual CTS protection is used by the AP to set a NAV at STAs which do not support STBC and at STAs which can associate solely through the secondary (STBC) beacon.
Secondary Beacon	0 = Primary Beacon 1 = Secondary Beacon	Indicates whether this beacon is a primary or a secondary beacon. The secondary beacon has half a beacon period shift relative to the primary beacon. In probe responses, this field shall not be interpreted and set to 0.
L-SIG TXOP Protection Full Support	0 = Not full support 1 = Full Support	This field should not be set to 1 if the L-SIG TXOP Protection bit is not set to 1 by all HT BSS members and the QAP.
PCO active	0 = PCO is not activated in the BSS 1 = PCO is activated in the BSS	Present in Beacon/Probe Response frames to indicate the information related to PCO BSS operation status. Non PCO STA regards the BSS as 40/20 MHz BSS and may associate with the BSS as in normal.
PCO phase	This bit indicates which PCO phase to use. It is only applicable to Beacon frame. 0 = switch to 20 MHz phase / keep 20 MHz phase 1 = switch to 40 MHz phase / keep 40 MHz phase	This bit is only applicable to Beacon frame

Copyright © 2006 IEEE. All rights reserved.
This is an unapproved IEEE Standards Draft, subject to change.

Field	Description	Use
Non-GF Devices Present	This field is used by the AP to indicate if any HT devices that are not GF capable have associated. 0 = All HT devices that are associated are GF capable 1 = one or more HT devices that are not GF capable have associated	Present in Beacon and Probe response frames to indicate when a non-AP STA should use GF Protection

7.4 Action frame format details

7.4.1 Spectrum management action details

7.4.1.1 Measurement Request frame format

7.4.1.2 Measurement Report frame format

7.4.1.3 TPC Request frame format

7.4.1.4 TPC Report frame format

7.4.1.5 Channel Switch Announcement frame format

Change Figure 117 as follows:

Category	Action Value	Channel Switch Announcement element	New Extension Channel Offset element
Octets: 1	1	5	3

Figure 117— Channel Switch Announcement frame body format

Add the following sentence to the end of 7.4.1.5:

The New Extension Channel Offset element shall be set as described in 7.3.2.20A. This element shall be present when switching to a 40MHz channel. It may be present when switching to a 20MHz channel (in which case the extension channel offset is set to 0).

7.4.2 QoS Action frame details

Copyright © 2006 IEEE. All rights reserved.
This is an unapproved IEEE Standards Draft, subject to change.

7.4.2.1 ADDTS Request frame format

7.4.2.2 ADDTS Response frame format

7.4.2.3 DELTS frame format

7.4.2.4 Schedule frame format

7.4.3 DLS Action frame details

7.4.3.1 DLS Request frame format

Insert the following text at the end of Section 7.4.3.1:

If the dot11HTCapabilityImplemented attribute is true, a STA shall include a HT Capability information element in the transmission of DLS Request frames.

Add the following additional row in Table 51:

Order	Information	Notes
9	HT Capabilities	The HT Capabilities information element shall be present when dot11HTCapabilityImplemented attribute is true

7.4.3.2 DLS Response frame format

Insert the following text at the end of Section 7.4.3.2:

If the dot11HTCapabilityImplemented attribute is true, a STA shall include a HT Capability information element in the transmission of DLS Response frames.

Add the following additional row in Table 52:

Order	Information	Notes
9	HT Capabilities	The HT Capabilities information element shall be present when dot11HTCapabilityImplemented attribute is true

7.4.3.3 DLS Teardown frame format

7.4.4 Block Ack Action frame details

Copyright © 2006 IEEE. All rights reserved.
This is an unapproved IEEE Standards Draft, subject to change.

7.4.4.1 ADDBA Request frame format

7.4.4.2 ADDBA Response frame format

7.4.4.3 DELBA frame format

7.4.5 Radio Measurement action details

7.4.6 Fast BSS transition action details

Insert the following new subclause

7.4.7 HT Management Action Frames details

Several Action frame formats are defined to support HT features. The Action field values associated with each frame format within the HT category are defined in Table n20. The frame formats are defined in 7.4.7.

Table n20 - HT Action field values

Action field value	Meaning
0	Set Recommended transmission Channel Width
1	MIMO Power Save
2	PSMP
3	PCO Phase Request
4	MIMO Channel Measurement Report
5	Reciprocity Correction
6	MIMO CSI Matrices Message
7	MIMO Uncompressed Steering Matrices Message
8	Compressed Steering Matrices Feedback
9	Antenna Selection Indices Feedback
10-255	Reserved

7.4.7.1 Recommended Transmission Channel Width Management Action Frame

Copyright © 2006 IEEE. All rights reserved.
This is an unapproved IEEE Standards Draft, subject to change.

The format of the Recommended Transmission Channel Width management action frames is defined in Table n21.

Insert the Category code for HT obtained from the 802.11 ANA in the table below.

Table n21 – Recommended Transmission Channel Width

Order	Information	Name	Value
1	Category	HT	TBD
2	Action	Set Recommended transmission Channel Width	0
3	Channel Width	Channel Width	0 = use 20 MHz channel (control) 1= use any channel width enabled under Supported channel width set

This frame can be sent by both non-AP STA and AP. If an AP wishes to receive 20 MHz packets, it will broadcast this management action frame to all STAs. In addition, the AP indicates its current recommended transmission channel width in the Additional HT Information Elements in the beacon.

7.4.7.2 MIMO Power Save Management Action Frame

The MIMO Power Save management action frame is of Category High Throughput.

The frame body of the MIMO Power Save Management Action frame is defined in Table n22.

Insert the Category code for HT obtained from the 802.11 ANA in the table below.

Table n22 – MIMO Power Save

Order	Information	Name	Value
1	Category	HT	TBD
2	Action	MIMO Power Save	1
3	Enable/Disable	Enable/Disable MIMO Power Save	1 = Enable 0 = Disable
4	Mode	MIMO Power Save Mode	0= static, don't send MIMO packets 1= dynamic, ok to send MIMO packets if preceded by RTS

Copyright © 2006 IEEE. All rights reserved.
This is an unapproved IEEE Standards Draft, subject to change.

The dynamic power save feature may be also activated at association by setting the MIMO Power Save field in the HT capability element, thus allowing a STA to remain in single Rx chain mode after association.

7.4.7.3 PCO Phase Request Management Action Frame

PCO Phase Request is a management action frame of category High Throughput to announce the phase change between 20 MHz and 40 MHz. The format of its frame body is defined in Table n23.

Insert the Category code for HT obtained from the 802.11 ANA in the table below.

Table n23 – PCO Phase Request

Order	Information	Name	Value
1	Category	HT	TBD
2	Action	PCO Phase Request	3
3	PCO Phase	PCO Phase	0 = switch to 20 MHz phase / keep 20 MHz phase 1= switch to 40 MHz phase / keep 40 MHz phase

This frame may be only sent by PCO AP. When PCO AP requests PCO STAs to change PCO phase, PCO AP shall either broadcast this frame or set PCO phase field of the additional HT information element in beacon. When this signals a switch from 20 MHz phase to 40 MHz phase, the duration of this frame shall be set so that it covers the total of a transition time from 20 MHz channel width to 40 MHz channel width, an intended duration of 40 MHz phase and a transition time from 40 MHz channel width to 20 MHz channel width. When this signals a switch from 40 MHz phase to 20 MHz phase, the duration of this frame shall be set so that it covers the requirement transition time of the BSS. PCO AP may broadcast this frame to advertise the current PCO phase.

7.4.7.4 MIMO Channel Measurement frame

This management action frame is of category High Throughput. The format of its frame body is defined in Table n24.

Copyright © 2006 IEEE. All rights reserved.
This is an unapproved IEEE Standards Draft, subject to change.

Insert the Category code for HT obtained from the 802.11 ANA in the table below.

Table n24 – MIMO Channel Measurement

Order	Information	Name	Size	Value
1	Category	HT	1	TBD
2	Action	MIMO Channel Measurement Report	1	4
3	Transmit Beamforming Control	Transmit Beamforming Control	2	See Figure n22
4	MCMR Segment Sequence	MCMR Segment Sequence	1	See text
5	Explicit Feedback Sequence	Explicit Feedback Sequence	1	Unused
6	MIMO Channel Measurement Report	MIMO Channel Measurement Report	$3 \times Ns \times Ni \times Nr$	See Figure n23 and Figure n24

where

Ns = Number of subcarriers in the Sounding HT-LTF

Nr = Number of antennas at the STA transmitting the MIMO Channel Measurement

Ni = Number of antennas at the STA to which the frame is directed

B0 B1	B2 B3	B4 B5	B6	B7	B8 B11	B12 B15
Nr	Ni	Calibration Sequence	Calibration Complete	Explicit Channel Feedback	Explicit Feedback Format	Reserved

Figure n22 – Transmit beamforming control field

The fields of the transmit beamforming control field are described in Table n25.

Copyright © 2006 IEEE. All rights reserved.
This is an unapproved IEEE Standards Draft, subject to change.

Table n25 – Use of transmit beamforming control fields (MIMO Channel measurement)

Field	Description
Nr	Number of antennas at the STA transmitting the MIMO Channel Measurement Report
Ni	Number of antennas at the STA to which the frame is directed
Calibration Sequence	The value of this field is unchanged for the frame exchanges during one calibration procedure
Calibration Complete	The Calibration Complete bit is set to '1' if the STA transmitting the MIMO Channel Measurement frame(s) declares the calibration procedure complete without requiring the other STA to transmit a Reciprocity Correction Vector frame
Explicit Channel Feedback	Set to 0

The MCMR Segment Sequence (1 octet) contains the segment sequence number when the MIMO Channel Measurement Report has been segmented. The MCMR Segment Sequence of the first segment is 0. The complete MIMO Channel Measurement Report contains $Ns \times Ni \times Nr$ complex coefficients.

Table n26 – Complex Coefficient Representation

B0-B11	B12-B23
Real part represented as twos complement	Imaginary part represented as twos complement

Each complex coefficient (3 octets) is represented by its 12-bit twos complement real and 12-bit twos complement imaginary parts (see Table n26). Hence the total length of the complete MIMO Channel Measurement Report is $3 \times Ns \times Ni \times Nr$ octets. The order of channel coefficients is as shown in Figure n23 and Figure n24.

```
For each subcarrier in the following order: (-58, …-2, 2, …,  +58),
include
{
    For each of Ni antennas at the initiating STA in order: (1, …, Ni)
    {
        Include Nr complex coefficients one for each antenna at the
        receiving STA in order: (1, …, Nr )
    }
}
```

Figure n23 - Encoding of MIMO Channel Measurement Report (40MHz)

Copyright © 2006 IEEE. All rights reserved.
This is an unapproved IEEE Standards Draft, subject to change.

```
For each subcarrier in the following order: (-28, …-1, 1, …,  +28),
include
{
    For each of Ni antennas at the initiating STA in order: (1, …, Ni)
    {
        Include Nr complex coefficients one for each antenna at the
        receiving STA in order: (1, …, Nr )
    }
}
```

Figure n24 - Encoding of MIMO Channel Measurement Report (20MHz)

The complete MIMO Channel Measurement Report may need to be transmitted using more than one MAC frame. In the mandatory configuration with Ns = 114, Ni = 2, Nr = 2, there will be 1368 octets (456 coefficients) in a single MIMO Channel Measurement Report element. The maximum length of the MIMO Channel Measurement Report field is 5472 octets (1824 coefficients) for the case with Ns = 114, Ni = 4, and Nr = 4. If the MIMO Channel Measurement Report is longer than 1368 octets, the first 1368 octets are included in the first frame (MCMR Segment Sequence = 0) and the remaining octets are included in subsequent frames (MCMR Segment Sequence = 1, 2, etc.).

7.4.7.5 Reciprocity Correction frame

This management action frame is of category High Throughput. The format of its frame body is defined in Table n27.

Insert the Category code for HT obtained from the 802.11 ANA in the table below.

Table n27 – Reciprocity Correction

Order	Information	Name	Size	Value
1	Category	HT	1	TBD
2	Action	Reciprocity Correction	1	5
3	Transmit Beamforming Control	Transmit Beamforming Control	2	See text.
4	MCMR Segment Sequence	MCMR Segment Sequence	1	See text
5	Explicit Feedback Sequence	Explicit Feedback Sequence	1	Unused
6	Reciprocity Correction Vector	Reciprocity Correction Vector	$3 \times Ns \times Nr$	See text

where

Ns = Number of subcarriers in the Calibration Training symbols

Nr = Number of antennas at the STA to which this frame is directed

Copyright © 2006 IEEE. All rights reserved.
This is an unapproved IEEE Standards Draft, subject to change.

Table n28 – Use of transmit beamforming control fields (Reciprocity Correction)

Field	Description
Nr	Number of antennas at the STA transmitting the MIMO Channel Measurement Report
Ni	Number of antennas at the STA to which the frame is directed
Calibration Complete	The Calibration Complete bit is set to '1'

The values of the three fields *Nr*, *Ni*, and Calibration Sequence are set to the same values as in the received MIMO Channel Measurement Report.

The Reciprocity Correction Vector contains *Ns* × *Nr* complex coefficients. Each complex coefficient (3 octets) is represented by its 12-bit twos complement real and 12-bit twos complement imaginary parts (see Table n26). The order of correction vector coefficients is as shown in Figure n25 and Figure n26.

```
For each subcarrier in the following order: (-58, …-2, 2, …,  +58),
include
{
    Include Nr complex coefficients one for each antenna at the
    receiving STA in order: (1, …, Nr )
}
```

Figure n25 – Encoding of the Reciprocity Correction Vector (40MHz)

```
For each subcarrier in the following order: (-28, …-1, 1, …,  +28),
include
{
    Include Nr complex coefficients one for each antenna at the
    receiving STA in order: (1, …, Nr )
}
```

Figure n26 – Encoding of the Reciprocity Correction Vector (20MHz)

The maximum length of the Correction Vector field corresponds to *Ns* = 114, *Nr* = 4 is 1368 octets.

7.4.7.6 MIMO CSI Matrices frame

The MIMO CSI Matrices management action frame is of category High Throughput. The format of its frame body is defined in Table n29..

Copyright © 2006 IEEE. All rights reserved.
This is an unapproved IEEE Standards Draft, subject to change.

Insert the Category code for HT obtained from the 802.11 ANA in the table below.

Table n29 – MIMO CSI Matrices

Order	Information	Name	Size	Value
1	Category	HT	1	TBD
2	Action	MIMO CSI Matrices Message	1	6
3	CSI Matrices Control	CSI Matrices Control	2	See text.
4	MCMR Segment Sequence	MCMR Segment Sequence	1	Unused
5	Explicit Feedback Sequence	Explicit Feedback Sequence	1	See text
6	CSI Matrices Report	CSI Matrices Report	see text	See text

B0 B1	B2 B3	B4 B5	B6	B7	B8 B11	B12 B15
Nc	Nr	reserved	reserved	Explicit Channel Feedback	Explicit Feedback Format	Reserved

Figure n27 – CSI Matrices Control field

Table n30 – Use of CSI Matrices control field (MIMO CSI Matrices frame)

Field	Description
Nc	Number of columns in each CSI matrix (Number of transmit antennas in the STA transmitting into the channel)
Nr	Number of rows in each CSI matrix
Explicit Feedback Format	See Table n31

Copyright © 2006 IEEE. All rights reserved.
This is an unapproved IEEE Standards Draft, subject to change.

Table n31 – Explicit Feedback Format Field for CSI Matrix Feedback

Field	Length	Values	Meaning
Grouping	2 bits	00	*Ng*=1 (No Grouping)
		01	Ng=2
		10	Ng=4
		11	reserved
Coefficients Size (*Nb*)	2 bits	00	4 bits
		01	5 bits
		10	6 bits
		11	8 bits

Each CSI Matrices feedback has a unique sequence number encoded in the explicit feedback sequence field. This is incremented between measurements.

A CSI matrix *H* for a single carrier has the structure defined in Table n32.

Copyright © 2006 IEEE. All rights reserved.
This is an unapproved IEEE Standards Draft, subject to change.

Table n32 – Matrix coding

Field	Size
Carrier Matrix Amplitude	3 bits
Real Part of element $H_{1,1}$	Nb bits
Imaginary Part of element $H_{1,1}$	Nb bits
Real Part of element $H_{1,2}$	Nb bits
Imaginary Part of element $H_{1,2}$	Nb bits
…	
Real Part of element $H_{1,Nc}$	Nb bits
Imaginary Part of element $H_{1,Nc}$	Nb bits
…	
Real Part of element $H_{Nr,1}$	Nb bits
Imaginary Part of element $H_{Nr,1}$	Nb bits
Real Part of element $H_{Nr,2}$	Nb bits
Imaginary Part of element $H_{Nr,2}$	Nb bits
…	
Real Part of element $H_{Nr,Nc}$	Nb bits
Imaginary Part of element $H_{Nr,Nc}$	Nb bits

The CSI matrices report for 20MHz has the structure defined in Table n33.

Copyright © 2006 IEEE. All rights reserved.
This is an unapproved IEEE Standards Draft, subject to change.

Table n33 – CSI matrices report for 20MHz

Field	Size	Meaning
SNR in Rx channel 1	8 bits	Signal to Noise Ratio in the first Rx chain of the STA sending the report.
…		
SNR in Rx channel *Nr*	8bits	Signal to Noise Ratio in the *Nr*'th Rx chain of the STA sending the report.
CSI Matrix for Carrier -26	$3+2\times Nb\times Nc\times Nr$ bits	CSI Matrix
CSI Matrix for Carrier -26+*Ng*	$3+2\times Nb\times Nc\times Nr$ bits	CSI Matrix
…		
CSI Matrix for carrier -1	$3+2\times Nb\times Nc\times Nr$ bits	CSI Matrix
CSI Matrix for carrier 1	$3+2\times Nb\times Nc\times Nr$ bits	CSI Matrix
CSI Matrix for carrier 1+*Ng*	$3+2\times Nb\times Nc\times Nr$ bits	CSI Matrix
…		
CSI Matrix for carrier 26	$3+2\times Nb\times Nc\times Nr$ bits	CSI Matrix

The CSI matrices report for 40MHz has the structure defined in Table n34.

Copyright © 2006 IEEE. All rights reserved.
This is an unapproved IEEE Standards Draft, subject to change.

Table n34 – CSI matrices report for 40MHz

Field	Size	Meaning
SNR in Rx channel 1	8 bits	Signal to Noise Ratio in the first Rx chain of the STA sending the report.
…		
SNR in Rx channel *Nr*	8bits	Signal to Noise Ratio in the *Nr*'th Rx chain of the STA sending the report.
CSI Matrix for Carrier -58	$3+2\times Nb\times Nc\times Nr$ bits	CSI Matrix
CSI Matrix for Carrier -58+*Ng*	$3+2\times Nb\times Nc\times Nr$ bits	CSI Matrix
…		
CSI Matrix for carrier -2	$3+2\times Nb\times Nc\times Nr$ bits	CSI Matrix
CSI Matrix for carrier 2	$3+2\times Nb\times Nc\times Nr$ bits	CSI Matrix
CSI Matrix for carrier 2+*Ng*	$3+2\times Nb\times Nc\times Nr$ bits	CSI Matrix
…		
CSI Matrix for carrier 58	$3+2\times Nb\times Nc\times Nr$ bits	CSI Matrix

The size of the CSI Matrix report is $Nr\times 8+Ns\times(3+2\times Nb\times Nc\times Nr)$ bits. The number of subcarriers sent *Ns* is a function of *Ng* and whether matrices for 40MHz or 20MHz are sent. The values of *Ns* for all the options are shown in Table n35.

Table n35 – Number of matrices

Ng	*Ns* 20MHz	*Ns* 40Mhz
1	56	114
2	30	58
4	16	30

7.4.7.7 MIMO Uncompressed Steering Matrices frame

The MIMO Uncompressed management action frame is of category High Throughput. The format of the its frame body is defined in Table n36.

Copyright © 2006 IEEE. All rights reserved.
This is an unapproved IEEE Standards Draft, subject to change.

Insert the Category code for HT obtained from the 802.11 ANA in the table below.

Table n36 – MIMO Uncompressed Steering Matrices

Order	Information	Name	Size	Value
1	Category	HT	1	TBD
2	Action	MIMO Uncompressed Steering Matrices Message	1	7
3	CSI Matrices Control	CSI Matrices Control	2	See text.
4	MCMR Segment Sequence	MCMR Segment Sequence	1	Unused
5	Explicit Feedback Sequence	Explicit Feedback Sequence	1	See text
6	Steering Matrices Report	Steering Matrices Report	see text	See text

Table n37 – Use of CSI Matrices control field (MIMO uncompressed steering matrices)

Field	Description
Nc	Number of columns in each steering matrix
Nr	Number of rows in each steering matrix
Explicit Feedback Format	See Table n38

Table n38 – Explicit Feedback Format Field for Uncompressed Steering Matrix Feedback

Field	Length	Values	Meaning
Grouping	2 bits	00	*Ng*=1 (No Grouping)
		01	Ng=2
		10	Ng=4
		11	reserved
Coefficients Size (*Nb*)	2 bits	00	4 bits
		01	5 bits
		10	6 bits

Copyright © 2006 IEEE. All rights reserved.
This is an unapproved IEEE Standards Draft, subject to change.

		11	8 bits

Each Steering Matrices feedback has a unique sequence number encoded in the explicit feedback sequence field. This is incremented between measurements.

A steering matrix V for a single carrier has the structure defined in Table n39.

Table n39 – Matrix coding

Field	**Meaning**
Real Part of element $V_{1,1}$	*Nb* bits
Imaginary Part of element $V_{1,1}$	*Nb* bits
Real Part of element $V_{1,2}$	*Nb* bits
Imaginary Part of element $V_{1,2}$	*Nb* bits
…	
Real Part of element $V_{1,Nc}$	*Nb* bits
Imaginary Part of element $V_{1,Nc}$	*Nb* bits
…	
Real Part of element $V_{Nr,1}$	*Nb* bits
Imaginary Part of element $V_{1,Nc}$	*Nb* bits
Real Part of element $V_{Nr,2}$	*Nb* bits
Imaginary Part of element $V_{Nr,2}$	*Nb* bits
…	
Real Part of element $V_{Nr,Nc}$	*Nb* bits
Imaginary Part of element $V_{Nr,Nc}$	*Nb* bits

The uncompressed steering matrices report for 20MHz has the structure defined in Table n40.

Copyright © 2006 IEEE. All rights reserved.
This is an unapproved IEEE Standards Draft, subject to change.

Table n40 – Uncompressed steering matrices report for 20MHz

Field	Size	Meaning
SNR	8 bits	Average Signal to Noise Ratio in the STA sending the report.
Steering Matrix for Carrier -26	2× $Nb \times Nc \times Nr$ bits	Steering Matrix
Steering Matrix for Carrier -26+Ng	2× $Nb \times Nc \times Nr$ bits	Steering Matrix
…		
Steering Matrix for carrier -1	2× $Nb \times Nc \times Nr$ bits	Steering Matrix
Steering Matrix for carrier 1	2× $Nb \times Nc \times Nr$ bits	Steering Matrix
Steering Matrix for carrier 1+Ng	2× $Nb \times Nc \times Nr$ bits	Steering Matrix
…		
Steering Matrix for carrier 26	2× $Nb \times Nc \times Nr$ bits	Steering Matrix

The uncompressed steering matrices report for 40MHz has the structure defined in Table n41.

Table n41 – Uncompressed Steering matrices report for 40MHz

Field	Size	Meaning
SNR	8 bits	Average Signal to Noise Ratio in the STA sending the report.
Steering Matrix for Carrier -58	2× $Nb \times Nc \times Nr$ bits	Steering Matrix
Steering Matrix for Carrier -58+Ng	2× $Nb \times Nc \times Nr$ bits	Steering Matrix
…		
Steering Matrix for carrier -2	2× $Nb \times Nc \times Nr$ bits	Steering Matrix
Steering Matrix for carrier 2	2× $Nb \times Nc \times Nr$ bits	Steering Matrix
Steering Matrix for carrier 2+Ng	2× $Nb \times Nc \times Nr$ bits	Steering Matrix
…		
Steering Matrix for carrier 58	+2× $Nb \times Nc \times Nr$ bits	Steering Matrix

Copyright © 2006 IEEE. All rights reserved.
This is an unapproved IEEE Standards Draft, subject to change.

For example in a 20MHz channel and *Ng=4* steering matrices are sent on carrier -26, -22, -18, -14, -10, -6, -2, -1, 1, 5, 9, 13, 17, 21, 25, 26.

The size of the Steering Matrix report is $8+Ns\times(2\times Nb\times Nc\times Nr)$ bits. The number of subcarriers sent *Ns* is a function of *Ng* and whether matrices for 40MHz or 20MHz are sent. The values of *Ns* for all the options is shown in Table n42.

Table n42 – Number of matrices

Ng	*Ns* 20MHz	*Ns* 40Mhz
1	56	114
2	30	58
4	16	30

7.4.7.8 Compressed Steering Matrices Feedback frame

The Compressed Steering Matrices Feedback management action frame is of category High Throughput. The format of its frame body is defined in Table n43.

Insert the Category code for HT obtained from the 802.11 ANA in the table below.

Table n43 – Compressed Steering Matrices Feedback

Order	Information	Name	Size	Value
1	Category	HT	1	TBD
2	Action	Compressed Steering Matrices Feedback	1	8
3	CSI Matrices Control	CSI Matrices Control	2	See text.
4	MCMR Segment Sequence	MCMR Segment Sequence	1	Unused
5	Receiver SNR	RX SNR	1	Average Signal to Noise Ratio in the STA sending the report.
6	Explicit Feedback Sequence	Explicit Feedback Sequence	1	See text
7	Quantized Steering Matrices Feedback Information	Quantized Steering Matrices Feedback Information	Variable	See text

The size of the Quantized Steering Matrices Feedback Information field depends on the values in the format field in the CSI Matrices control field.

The Transmit Beamforming Control field is defined in Figure n22 and used as defined in Table n44.

Copyright © 2006 IEEE. All rights reserved.
This is an unapproved IEEE Standards Draft, subject to change.

Table n44 – Use of transmit beamforming control fields (Compressed steering matrices feedback)

Field	Description
Nc	Number of columns in the steering matrix V
Nr	Number of rows in the steering matrix V
Explicit Channel Feedback Format	See Table n45

Table n45 – Explicit Feedback Format Field for compresed Steering Matrix feedback

Field	Length	Values	Meaning
Grouping	2 bits	00	*Ng*=1 (No Grouping)
		01	Ng=2
		10	Ng=4
		11	reserved
Codebook information	2 bits	00	1 bit for ψ, 3 bits for ϕ
		01	2 bits for ψ, 4 bits for ϕ
		10	3 bits for ψ, 5 bits for ϕ
		11	4 bits for ψ, 6 bits for ϕ

Each compressed steering matrix feedback has a unique sequence number encoded in the explicit feedback sequence field. This is incremented between measurements.

Quantized CSI Feedback Information field is defined as: Data: Channel matrix elements indexed in order by data subcarrier index and angle. This simplifies the interpolation angles between subcarriers, if grouping other than 1 is employed. The explanation on how these angles are generated from the steering matrix V is given in 20.3.5.2.3.

The angles are sent in order according to Table n46.

Copyright © 2006 IEEE. All rights reserved.
This is an unapproved IEEE Standards Draft, subject to change.

Table n46 – Order of angles in CSI Feedback Information field

V(f)	# of params	The order of angles to be fed back
2x1	2	$\phi 11$, $\psi 21$
2x2	2	$\phi 11$, $\psi 21$
3x1	4	$\phi 11$, $\phi 21$, $\psi 21$, $\psi 31$,
3x2	6	$\phi 11$, $\phi 21$, $\psi 21$, $\psi 31$, $\phi 22$, $\psi 32$
3x3	6	$\phi 11$, $\phi 21$, $\psi 21$, $\psi 31$, $\phi 22$, $\psi 32$
4x1	6	$\phi 11$, $\phi 21$, $\phi 31$, $\psi 21$, $\psi 31$, $\psi 41$
4x2	10	$\phi 11$, $\phi 21$, $\phi 31$, $\psi 21$, $\psi 31$, $\psi 41$, $\phi 22$, $\phi 32$, $\psi 32$, $\psi 42$
4x3	12	$\phi 11$, $\phi 21$, $\phi 31$, $\psi 21$, $\psi 31$, $\psi 41$, $\phi 22$, $\phi 32$, $\psi 32$, $\psi 42$, $\phi 33$, $\psi 43$
4x4	12	$\phi 11$, $\phi 21$, $\phi 31$, $\psi 21$, $\psi 31$, $\psi 41$, $\phi 22$, $\phi 32$, $\psi 32$, $\psi 42$, $\phi 33$, $\psi 43$

The angles are quantized according to the following formulae:

$$\psi = \frac{k\pi}{2^{b_\psi + 1}} + \frac{\pi}{2^{b_\psi + 2}}$$

where

$$k = 0,1,...,2^{b_\psi} - 1$$

and

$$\phi = \frac{k\pi}{2^{b_\phi - 1}} + \frac{\pi}{2^{b_\varphi}}$$

where

$$k = 0,1,...,2^{b_\phi} - 1$$

b_ϕ is the number of bits used to quantize ϕ and b_ψ is the number of bits used to quantize ψ. (See Table n45).

All angles are transmitted LSB to MSB.

Subcarriers are sent in order according to the following sequence. For 20 MHz bandwidth operation:

Copyright © 2006 IEEE. All rights reserved.
This is an unapproved IEEE Standards Draft, subject to change.

$$-28;-28+Ng;-28+2Ng.....-1;1;1+Ng;1+2Ng....28$$

For 40 MHz bandwidth operation:

$$-58;-58+Ng;-58+2Ng.....-2;2;2+Ng;2+2Ng....58$$

For example, 40 MHz operation with Ng=2 would have subcarriers in the following order:

[-58,-56….-4,-2,2,4…….56,58].

Example: 2x2, 20MHz, no grouping, bits for each ψ = 3, bits for each ϕ=5. Each ψ_{ij} over all tone indices has 168 bits. Each ϕ_{ij} over all tone indices has 280 bits.

bits	b1..b5	b6..b10	…	b276..b280	b281..b283	b284..b286	…	b446..b448
data	$\phi_{11}(f_{-28})$	$\phi_{11}(f_{-27})$	…	$\phi_{11}(f_{28})$	$\psi_{21}(f_{-28})$	$\psi_{21}(f_{-27})$	…	$\psi_{21}(f_{28})$

Example: 4x2, 40MHz, 4 tone grouping, ψ=2, ϕ = 4. Each ϕ_{ij} over all tone indices has 120 bits. Each ψ_{ij} over all tone indices has 60 bits.

bits	b1..b4	b5..b8	…	b117..b120	b121..b124	…	b361..b362	…	b661..b664	…	b899..b900
data	$\phi_{11}(f_{-58})$	$\phi_{11}(f_{-54})$	…	$\phi_{11}(f_{58})$	$\phi_{21}(f_{-58})$	…	$\psi_{21}(f_{-58})$	…	$\phi_{32}(f_{-58})$	…	$\psi_{42}(f_{58})$

7.4.7.9 Antenna Selection Indices Feedback Frame

The Antenna Selection Indices management action frame is of category High Throughput. The format of its frame body is defined in Table n42.

Insert the Category code for HT obtained from the 802.11 ANA in the table below.

Table n38 – Antenna Selection Indices Feedback

Order	Information	Name	Size	Value
1	Category	HT	1	TBD
2	Action	Antenna Selection Indices Feedback	1	9

Copyright © 2006 IEEE. All rights reserved.
This is an unapproved IEEE Standards Draft, subject to change.

3	Antenna Selection Indices	Antenna Selection Indices	1	See text.

Bit 0 through bit 7 in the Antenna Selection Indices field are corresponding to antennas with indices 0 through 7 respectively. The value of "1" in a bit represents the corresponding antenna is selected, and the value of "0" indicates the corresponding antenna is not selected.

7.4.7.10 PSMP

Power Save Multiple Poll is a Management Action Frame of category High Throughput.

The DA field of this frame is the broadcast address.

The PSMP parameter set is used to describe the DLT and ULT which immediately follows the PSMP frame.

The frame body of this frame is defined in Figure n28 The PSMP parameter set field is followed by zero or more STA Info fields.

Insert the Category code for HT obtained from the 802.11 ANA in the table below.

Order	Information	Name	Value
1	Category	HT	TBD
2	Action	PSMP	2
3	PSMP Parameter Set		
4 .. end	STA Info Repeated N_STA times		

Figure n28 – Format of the PSMP Management Action Field

N_STA	More PSMP	PSMP Sequence Duration
Bits: 5	1	10

Figure n29 – PSMP Parameter Set format

The N_STA field indicates the number of STA Info fields present.

The More PSMP field when set to 1 indicates whether this PSMP sequence will be followed by another PSMP sequence, called a subsequent PSMP (Sub-PSMP). When set to 0 it indicates that the current PSMP sequence is the last in current the service period.

Copyright © 2006 IEEE. All rights reserved.
This is an unapproved IEEE Standards Draft, subject to change.

The PSMP Sequence Duration field indicates the duration of the current PSMP exchange which is described by the PSMP frame, in units of 8us, relative to the end of the PSMP frame. Therefore, this field can describe a PSMP exchange of up to 8 ms in duration. Any Sub-PSMP starts a SIFS interval after the indicated duration.

	TSIDs set	STA ID	DLT Start Offset	DLT Duration	ULT Start Offset	ULT Duration
Bits:	8	16	11	8	11	10

Figure n30 – STA Info Field Format

The STA ID field indicates the AID value for BSS mode of operation and 16 LSBs of MAC address in IBSS mode of operation.

Broadcast and Multicast data can be transmitted using PSMP by setting STA_ID to a specific value 0.

The DLT Start Offset field indicates the start of the PPDU which has the DL data of the STA. The offset is specified relative to the end of the PSMP frame. It is given as an integer number of 4us. If no DLT is scheduled for a STA, but a ULT is scheduled for that STA, then the DLT Duration is set to null (0).

The DLT Duration field indicates the end of DL data of a STA relative from the start of the PSDU that has the first frame destined to the STA. It contains a duration in units of 16us. If no ULT is scheduled for a STA, but a DLT is scheduled for that STA, then the ULT Duration is set to null (0).

NOTE—The STA does not expect transmissions directed to this STA PPDU which start after the DLT Duration expiration. The STA completes receiving any PPDU directed to this STA which starts before the end of the DLT. If no frames directed toward a STA begin within DLT Duration from the DLT start offset time for that STA, then the STA assumes that no frame directed toward it is forthcoming during this DLT.

The ULT Start Offset field indicates the start of the ULT. The first ULT is scheduled to begin after a SIFS interval from the end of the last DLT described in the PSMP. The offset is specified relative to the end of the PSMP frame. It is specified in units of 4us. If no ULT is scheduled for a STA, but a DLT is scheduled for that STA, then the ULT Start Offset is set to null (0).

The ULT Duration field indicates the maximum length of a ULT for a STA. ULT duration is specified in units of 4 us. If no ULT is scheduled for a STA, but a DLT is scheduled for that STA, then the ULT duration is set to null (0). All transmissions by the STA within the current PSMP lie within the indicated ULT.

The TSIDs set field presents the AP recommendation to the STA containing the TSIDs for which data can be transmitted in the ULT resources. Each bit in this field represents a TSID, where the bit position is equal to TSID - 8. For example bit2 represents TSID=10. If one more bits are set, the AP is recommending that the STA use the ULT for the indicated TSIDs.

All frames sent within a PSMP exchange have the Duration/ID field set to the remaining duration of the TxOP.

NOTE—this includes control frames.

Multicast data is transmitted using PSMP by setting STA_ID in the STA_INFO field to a specific value 0. The ULT startoffset and ULT duration fields of the STA_INFO field shall be set to the Least Significant Bits of the multicast address.

Copyright © 2006 IEEE. All rights reserved.
This is an unapproved IEEE Standards Draft, subject to change.

Insert the following subclause

7.4A Aggregated MPDU frames

The A-MPDU maximum length is 65535 bytes.

7.4A.1 Aggregated MPDU format (A-MPDU)

An A-MPDU consists of a number of A-MPDU sub-frames as shown in Figure n31.

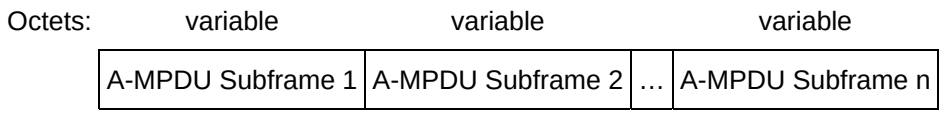

Figure n31 - A-MPDU format

Each A-MPDU sub-frame consists of a MPDU delimiter followed by an MPDU. Except when it is the last sub-frame in an A-MPDU, padding octets are appended to make each sub-frame a multiple of 4 octets in length.

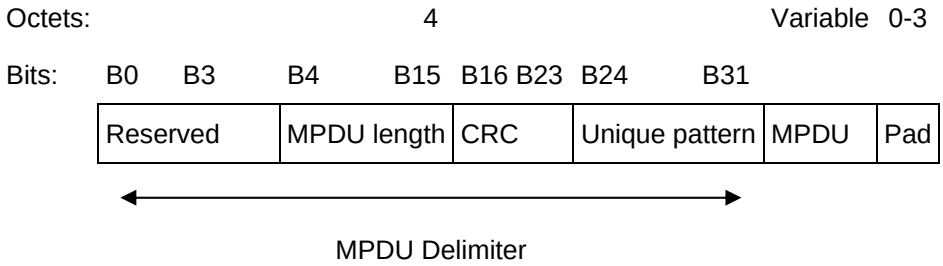

Figure n32 - A-MPDU sub-frame format

The MPDU delimiter is 4 octets in length and contains the fields shown in Figure n32 and defined in Table n47.

Table n47 – MPDU delimiter Fields

MPDU delimiter Field	Size (bits)	Description
Reserved	4	0
MPDU length	12	Length of the MPDU in octets
CRC	8	8-bit CRC of the preceding 16-bits.

Copyright © 2006 IEEE. All rights reserved.
This is an unapproved IEEE Standards Draft, subject to change.

Unique pattern	8	Unique pattern that may be used to detect an MPDU delimiter when scanning for a delimiter. The unique pattern is set to the ASCII value for character 'N'.

The purpose of the MPDU delimiter is to robustly delimit the MPDUs within the aggregate. Robust in this case means that the structure of the aggregate can usually be recovered when one or more MPDU delimiters are received with errors. Individual delimiters have the same BER as the surrounding MPDUs, and so can be lost.

NOTE—A delimiter with MPDU length zero is valid. This can be used to introduce padding between MPDUs to satisfy the MPDU density limit requirement or at the end of the A-MPDU.

7.4A.1.1 CRC

The CRC field is an 8-bit CRC value. It is used as a Frame Check Sequence (FCS) to protect the Reserved and MPDU length fields. The CRC field shall be the one's complement of the remainder generated by the modulo 2 division of the protected bits by the polynomial

$$x^8 + x^2 + x^1 + 1$$

where the shift-register state shall be preset to all-ones. This field shall be sent MSB first.

7.4A.1.2 De-aggregation (Informative)

The receiver checks the MPDU delimiter for validity based on the CRC. It may also check that the length indicated is within the PSDU HT-LENGTH indicated in RXVECTOR.

If the MPDU delimiter is valid, the MPDU is extracted from the aggregate. The next MPDU delimiter is expected at the first multiple of 4 octets immediately after the current MPDU. This process is continued until the end of the PPDU is reached.

If the MPDU delimiter is not valid, the deaggregation process skips forward 4 octets and checks to see if the new location contains a valid MPDU delimiter. It continues searching until either a valid delimiter is found, or the end of the PSDU is reached based on the RXVECTOR PSDU HT length field. [2]

This algorithm is expressed in Figure n33 (note, this is not optimized for efficiency).

[2] This procedure will occasionally wrongly interpret a random bit-pattern as a valid delimiter. When this happens, the MAC will attempt to interpret a random MPDU. The MAC will discard it based on a bad MAC CRC check. The overall effect may be to lose one or more MPDUs from the aggregate very infrequently.

Copyright © 2006 IEEE. All rights reserved.
This is an unapproved IEEE Standards Draft, subject to change.

```
Parse A-MPDU(length)
{
  Int offset = 0;       /* Byte offset from start of PPDU */
  While (offset+4 < length)
  {
    If valid_MPDU_delimiter(offset) &&
       get_MPDU_length(offset) <= negotiated_MPDU_limit &&
       get_MPDU_length(offset) <= (length – (offset+4))
    {
                         /* Valid delimiter */
      Receive_MPDU(offset+4, get_MPDU_length(offset));
                         /* advance multiple of 4 bytes */
      offset += 4 + 4*((get_MPDU_length(offset)+3)/4);
    }
    Else
    {
      /* delimiter invalid, advance 4 bytes and try again */
      offset += 4;
    }
  }
}
```

Figure n33 - A-MPDU parsing

NOTE—the unique pattern can be used to reduce computation required while scanning for a valid delimiter. In this case the receiver tests each possible delimiter for a matching unique pattern. Only when a match is discovered does it then check the CRC.

7.4A.2 A-MPDU Contents

An A-MPDU aggregate is a sequence of MPDUs carried in a single PPDU carrying the aggregate attribute.

All the MPDUs within an A-MPDU are addressed to the same receiver address.

The Duration fields in the MAC Headers of all MPDUs in an A-MPDU carry the same value.

The aggregate shall only contain MPDUs as described below.

Table n48 – Single Receiver Aggregation MPDUs using N-Immediate BlockAck

MPDU	Description	Comments
BlockAck	Block ACK MPDUs	BlockAck may be non-aggregate frame (see BlockAck explanation)
QoS Data	Data MPDUs sent under Block-ACK policy.	One TID per aggregation
QoS null	Can be sent out of any BlockAck agreement	This may be used to carry a Management Action frame under MA embedding. This supports explicit feedback and channel calibration

Table n49 – Single Receiver Aggregation MPDUs using N-Delayed BlockAck

Copyright © 2006 IEEE. All rights reserved.
This is an unapproved IEEE Standards Draft, subject to change.

MPDU	Description	Comments
BlockAck	Block ACK MPDUs with no ACK policy	
QoS Data	Data MPDUs sent under Block-ACK policy.	
QoS null	Can be sent out of any BlockAck agreement	This may be used to carry a Management Action frame under MA embedding. This supports explicit feedback and channel calibration
BlockAckReq	Block ACK Requests with no ACK policy. No implicit BlockAckReq allowed	

Table n50 – Single Receiver Aggregation MPDUs using MTBA/PSMP

MPDU	Description	Comments
MTBA	Contains acknowledgement for data received under MTBA ack policy in the previous ULT/DLT	At most one
QoS Data	Data MPDUs sent under MTBA/PSMP Ack policy.	Multiple TIDs allowed
MTBAR	Contains block ack request for data transmitted during PSMP exchange	At most one with “No-ack” policy
QoS null	Can be sent out of any BlockAck agreement	This may be used to carry a Management Action frame under MA embedding. This supports explicit feedback and channel calibration

7.5 Frame usage

8. Security

8.1 Framework

8.2 Pre-RSNA security methods

Copyright © 2006 IEEE. All rights reserved.
This is an unapproved IEEE Standards Draft, subject to change.

8.3 RSNA data confidentiality protocols

8.4 RSNA security association management

8.5 Keys and key distribution

8.6 Mapping EAPOL keys to IEEE 802.11 keys

8.7 Per-frame pseudo-code

Insert the following subclause

8.8 Security for HT STA

An HT STA shall not use WEP or TKIP based encryption when sending A-MPDU aggregated data to an HT peer.

9. MAC sublayer functional description

9.1 MAC architecture

9.1.5 Fragmentation/defragmentation overview

Change paragraph 2 of 9.1.5 as follows:

Only MPDUs with a unicast receiver address shall be fragmented. Broadcast/multicast frames shall not be fragmented even if their length exceeds dot11FragmentationThreshold. <u>Unicast frames transmitted by a HT STA to a HT peer using Block Ack acknowledgement shall not be fragmented.</u>

9.2 DCF

9.2.3 IFS

Insert a new IFS item "RIFS" as the new bulleted item a) and adjust the bullet lettering for the existing items as appropriate.

Copyright © 2006 IEEE. All rights reserved.
This is an unapproved IEEE Standards Draft, subject to change.

a) RIFS reduced interframe space

9.2.3.1 SIFS

9.2.3.2 PIFS

9.2.3.3 DIFS

9.2.3.4 AIFS

9.2.3.5 Extended IFS (EIFS)

Add the following text at the end of this section.

EIFS shall not be invoked if the NAV is set by the frame that would have caused an EIFS.

Insert a new subclause for RIFS.

9.2.3.6 RIFS

RIFS may be used in place of SIFS to separate multiple transmissions from a single transmitter when no SIFS-separated response transmission is expected as a means of reducing overhead and thereby increasing network efficiency. There are additional restrictions regarding when RIFS may be employed. Those restrictions appear in appropriate subclauses.

9.2.4 DCF access procedure

9.2.5.4 Setting and resetting the NAV

Change the paragraph in 9.2.5.4 cited below as indicated:

When Dual CTS Protection is not required by the AP of a BSS, then a~~A~~ STA that used information from an RTS frame as the most recent basis to update its NAV setting is permitted to reset its NAV if no PHY-RXSTART.indication is detected from the PHY during a period with a duration of (2 x aSIFSTime) + (CTS_Time) + aPHY-RX-START-Delay + (2 x aSlotTime) starting at the PHY-RXEND.indication corresponding to the detection of the RTS frame. The “CTS_Time” shall be calculated using the length of the CTS frame and the data rate at which the RTS frame used for the most recent NAV update was received. When Dual CTS Protection is required by the AP of a BSS, then a STA that used information from an RTS frame as the most recent basis to update its NAV setting is permitted to reset its NAV if no PHY-RXSTART.indication is detected from the PHY during a period with a duration of (3 x aSIFSTime) + (CTS_Time_STBC + CTS_Time_nSTBC) + aPHY-RX-START-Delay + (2 x aSlotTime) starting at the

Copyright © 2006 IEEE. All rights reserved.
This is an unapproved IEEE Standards Draft, subject to change.

PHY-RXEND.indication corresponding to the detection of the RTS frame. The "CTS_Time_STBC" shall be calculated using the length of the CTS frame and the lowest basic STBC MCS data rate. The "CTS_Time_nSTBC" shall be calculated using the length of the CTS frame and the data rate at which the RTS frame used for the most recent NAV update was received, or at the lowest non-STBC basic rate if the RTS frame used for the most recent NAV update was received at an STBC rate.

9.2.5 DCF access procedure

9.2.5.4 Setting and resetting the NAV

Insert the following subclause

9.2.5.4.1 Dual CTS Protection

If the Dual CTS Protection subfield has value 1 in the beacons transmitted by its AP, a non-AP STA shall start a TXOP with an RTS directed at the AP. The AP shall respond with a dual CTS (CTS1 followed by CTS2) separated by PIFS. The following cases exist:

Table n51 - Dual CTS

Type of RTS	CTS Description	Timing
Non-STBC RTS	CTS1: Same rate or MCS as the RTS (non-STBC) CTS2: Lowest Basic STBC MCS (STBC)	PIFS shall be used as the interval between CTS1 and CTS2 – if the medium becomes busy within a PIFS time following CTS1, then CTS2 shall not be transmitted as part of this frame exchange.
STBC RTS	CTS1: Lowest Basic STBC MCS (STBC) CTS2: Lowest Basic Rate (non-STBC)	The STA resumes transmission a PIFS+CTS2+SIFS after receiving CTS1, instead of after SIFS. The time it takes to transmit CTS2 is known in advance according to the above rules.

The dual CTS response only applies to the AP, a non-AP STA shall always respond to an RTS request with a single CTS.

If dual CTS Protection is enabled, the AP should protect STBC TXOPs with a non-STBC CTS-to-self and non-STBC TXOPs with an STBC CTS-to-self. The AP should continue PIFS after the CTS, to allow for a collision detect.

The protection frames shall set a NAV for the whole duration of the STBC sequence.

STBC control frames shall be transmitted in response to received STBC frames if the Dual CTS Protection bit is set. Non-STBC control frames shall be used otherwise.

9.2.6 Directed MPDU transfer procedure

Copyright © 2006 IEEE. All rights reserved.
This is an unapproved IEEE Standards Draft, subject to change.

Change the four paragraphs of 9.2.6 as follows:

A STA shall use an RTS/CTS exchange for directed frames only when the length of the MPDU or A-MPDU is greater than the length threshold indicated by the dot11RTSThreshold attribute.

The dot11RTSThreshold attribute shall be a managed object within the MAC MIB, and its value may be set and retrieved by the MLME. The value 0 shall be used to indicate that all MPDUs shall be delivered with the use of RTS/CTS. Values of dot11RTSThreshold larger than the maximum M~~S~~PDU or A-MPDU length shall indicate that all MPDUs shall be delivered without RTS/CTS exchanges.

When an RTS/CTS exchange is used, the ~~asynchronous~~ data frame or A-MPDU shall be transmitted after the end of the CTS frame and a SIFS period. No regard shall be given to the busy or idle status of the medium when transmitting this data frame.

When an RTS/CTS exchange is not used, the ~~asynchronous~~ data frame or A-MPDU shall be transmitted following the success of the basic access procedure. With or without the use of the RTS/CTS exchange procedure, the STA that is the destination of an asynchronous data frame shall follow the ACK procedure.

9.3 PCF

9.3.3 PCF transfer procedure

9.3.3.3 CFPMaxDuration limit

9.4 Fragmentation

Change paragraphs 2 to 5 of 9.4 as follows:

The length of an MPDU shall be an equal number of octets for all fragments except the last, which may be smaller. The length of an MPDU shall always be an even number of octets, except for the last fragment of an MSDU, A-MSDU or MMPDU, which may be either an even or an odd number of octets. The length of a fragment shall never be larger than dot11FragmentationThreshold unless WEP is invoked for the MPDU. If WEP is active for the MPDU, then the MPDU shall be expanded by IV and ICV (see 8.2.1); this may result in a fragment larger than dot11FragmentationThreshold.

A fragment is an MPDU, the payload of which carries all or a portion of an MSDU, A-MSDU or MMPDU. When data are to be transmitted, the number of octets in the fragment (before processing by the security mechanism) shall be determined by dot11FragmentationThreshold and the number of octets in the MPDU that have yet to be assigned to a fragment at the instant the fragment is constructed for the first time. Once a fragment is transmitted for the first time, its frame body content and length shall be fixed until it is successfully delivered to the immediate receiving STA. A STA shall be capable of receiving fragments of arbitrary length.

If a fragment requires retransmission, its frame body content and length shall remain fixed for the lifetime of the MSDU, A-MSDU or MMPDU at that STA. After a fragment is transmitted once, contents and length

Copyright © 2006 IEEE. All rights reserved.
This is an unapproved IEEE Standards Draft, subject to change.

of that fragment are not allowed to fluctuate to accommodate the dwell time boundaries. Each fragment shall contain a Sequence Control field, which is comprised of a sequence number and fragment number. When a STA is transmitting an MSDU, A-MSDU or MMPDU, the sequence number shall remain the same for all fragments of that MSDU, A-MSDU or MMPDU. The fragments shall be sent in order of lowest fragment number to highest fragment number, where the fragment number value starts at zero, and increases by one for each successive fragment.

The Frame Control field also contains a bit, the More Fragments bit, that is equal to zero to indicate the last (or only) fragment of the MSDU, A-MSDU or MMPDU. The source STA shall maintain a transmit MSDU timer for each MSDU or A-MSDU being transmitted. The attribute dot11MaxTransmitMSDULifetime specifies the maximum amount of time allowed to transmit an MSDU or A-MSDU. The timer starts on the attempt to transmit the first fragment of the MSDU or A-MSDU. If the timer exceeds dot11MaxTransmitMSDULifetime, then all remaining fragments are discarded by the source STA and no attempt is made to complete transmission of the MSDU or A-MSDU.

9.5 Defragmentation

Change 9.5 as follows:

Each fragment contains information to allow the complete MSDU, A-MSDU or MMPDU to be reassembled from its constituent fragments. The header of each fragment contains the following information that is used by the destination STA to reassemble the MSDU, A-MSDU or MMPDU:

— Frame type

— Address of the sender, obtained from the Address2 field

— Destination address

— *Sequence Control field:* This field allows the destination STA to check that all incoming fragments belong to the same MSDU or MMPDU, and the sequence in which the fragments should be reassembled. The sequence number within the Sequence Control field remains the same for all fragments of an MSDU, A-MSDU or MMPDU, while the fragment number within the Sequence Control field increments for each fragment.

— *More Fragments indicator:* Indicates to the destination STA that this is not the last fragment of the MSDU, A-MSDU or MMPDU. Only the last or sole fragment of the MSDU, A-MSDU or MMPDU shall have this bit set to 0. All other fragments of the MSDU, A-MSDU or MMPDU shall have this bit set to 1.

The destination STA shall reconstruct the MSDU, A-MSDU or MMPDU by combining the fragments in order of fragment number subfield of the Sequence Control field. If ~~WEP~~ encryption has been applied to the fragment, it shall be decrypted before the fragment is used for defragmentation of the MSDU, A-MSDU or MMPDU. If the fragment with the More Fragments bit set to 0 has not yet been received, then the destination STA knows that the MSDU, A-MSDU or MMPDU is not yet complete. As soon as the STA receives the fragment with the More Fragments bit set to 0, the STA knows that no more fragments may be received for the MSDU, A-MSDU or MMPDU.

All STAs shall support the concurrent reception of fragments of at least three MSDUs, A-MSDUs or MMPDUs. Note that a STA receiving more than three fragmented MSDUs, A-MSDUs or MMPDUs concurrently may experience a significant increase in the number of frames discarded.

Copyright © 2006 IEEE. All rights reserved.
This is an unapproved IEEE Standards Draft, subject to change.

The destination STA shall maintain a Receive Timer for each MSDU, A-MSDU or MMPDU being received, for a minimum of three MSDUs, A-MSDUs or MMPDUs. The STA may implement additional timers to be able to receive additional concurrent MSDUs, A-MSDUs or MMPDUs. The receiving STA shall discard all fragments that are part of an MSDU, A-MSDU or MMPDU for which a timer is not maintained. There is also an attribute, aMaxReceiveLifetime, that specifies the maximum amount of time allowed to receive an MSDU or A-MSDU. The receive MSDU ~~or MMPDU~~ timer starts on the reception of the first fragment of the MSDU, A-MSDU or MMPDU. If the receive MSDU timer exceeds aMaxReceiveLifetime, then all received fragments of this MSDU, A-MSDU or MMPDU are discarded by the destination STA. If additional fragments of a directed MSDU, A-MSDU or MMPDU are received after its aMaxReceiveLifetime is exceeded, those fragments shall be acknowledged and discarded.

To properly reassemble MPDUs into an MSDU, A-MSDU or MMPDU, a destination STA shall discard any duplicated fragments received. A STA shall discard duplicate fragments as described in 9.2.9. However, an acknowledgment shall be sent in response to a duplicate fragment of a directed MSDU.

9.6 Multirate support

Changes the subclause 9.6 as follows

Some PHYs have multiple data transfer rate capabilities that allow implementations to perform dynamic rate switching with the objective of improving performance. The algorithm for performing rate switching is beyond the scope of this standard, but in order to ensure coexistence and interoperability on multirate-capable PHYs, this standard defines a set of rules to be followed by all STAs.

Control frames that initiate a frame exchange shall be transmitted at one of the rates in the BSSBasicRateSet parameter, unless except in the following cases:

— When the transmitting STA's protection mechanism is enabled, and the control frame is a protection mechanism frame

— When the control frame is a BlockAckReq or BlockAck frame

— When the control frame is a STBC control frame

In the ~~former~~first case, the control frame shall be transmitted at a rate according to the separate rules for determining the rates of transmission of protection frames in 9.13. In the ~~latter~~second case, the control frame shall be transmitted in accordance with this subclause. In the last case, the control frame shall be transmitted using the STBC basic MCS.

All frames with multicast and broadcast in the address 1 field that have a UP of zero shall be transmitted at one of the rates included in the BSS basic rate set, regardless of their type or subtype. However, if the STBC Control Frame support bit is enabled the secondary STBC beacon shall be transmitted by STBC Basic MCS and multicast frames shall be repeated by Basic STBC MCS signaled in the Additional HT Information element.

All data frames of subtype (QoS) (+)CF-Poll sent in the CP shall be transmitted at one of the rates in the BSS basic rate set so that they will be understood by all STAs in the BSS, unless an RTS/CTS exchange has already been performed before the transmission of the data frame of subtype CF-Poll and the Duration field in the RTS frame covers the entire TXOP. All other data, BlockAckReq, and BlockAck frames and/or management MPDUs with unicast in the address 1 field shall be sent using any data rate subject to the following constraints: No STA shall transmit a unicast frame at a rate that is not supported by the receiver

Copyright © 2006 IEEE. All rights reserved.
This is an unapproved IEEE Standards Draft, subject to change.

STA, as reported in any Supported Rates and Extended Supported Rates element in the management frames. For frames of type (QoS) Data+CF-Ack, (QoS) Data+CF-Poll+CF-Ack, and (QoS) CF-Poll+CF-Ack, the rate chosen to transmit the frame should be supported by both the addressed recipient STA and the STA to which the ACK frame is intended. The BlockAck control frame shall be sent at the same rate as the BlockAckReq frame if it is sent in response to a BlockAckReq frame.

Under no circumstances shall a STA initiate transmission of a data or management frame at a data rate higher than the greatest rate in the OperationalRateSet, a parameter of the MLME-JOIN.request primitive.

To allow the transmitting STA to calculate the contents of the Duration/ID field, a STA responding to a received frame shall transmit its Control Response frame (either CTS or ACK), other than the Block-Ack control frame, at the highest rate in the BSSBasicRateSet parameter that is less than or equal to the rate of the immediately previous frame in the frame exchange sequence (as defined in 9.12) and that is of the same modulation class (see 9.6.1) as the received frame. If no rate in the basic rate set meets these conditions, then the control frame sent in response to a received frame shall be transmitted at the highest mandatory rate of the PHY that is less than or equal to the rate of the received frame, and that is of the same modulation class as the received frame. In addition, the Control Response frame shall be sent using the same PHY options as the received frame, unless they conflict with the requirement to use the BSSBasicRateSet parameter.

When non-HT rates are used, a~~A~~n alternative rate for the control response frame may be used, provided that the duration of the control response frame at the alternative rate is the same as the duration of the control response frame at the originally chosen rate and the alternative rate is in either the BSSBasicRateSet parameter or the mandatory rate set of the PHY and the modulation of the control response frame at the alternative rate is the same type as that of the received frame. When HT rates are used, the control frame rates are chosen from the non-HT basic rate set as described in subclase 9.6.2.

For the Clause 17, Clause 18, and Clause 19 PHYs, the time required to transmit a frame for use in the Duration/ID field is determined using the PLME-TXTIME.request primitive (see 10.4.6) and the PLMETXTIME. confirm primitive (see 10.4.7), both defined in 17.4.3, 18.3.4, 19.8.3.1, 19.8.3.2, or 19.8.3.3 depending on the PHY options. In QSTAs, the Duration/ID field may cover multiple frames and may involve using the PLME-TXTIME.request primitive several times.

The MCS set and indicated MCS values defined in Clause 20 PHY are used for HT format PPDUs transmission only.

9.6.1 Modulation classes

Add the following row to the end of Table 64:

Modulation Class	Description of Modulation
8	MIMO-OFDM PHY (Clause 20)

Insert the following subclause:

9.6.2 Non-HT Basic Rate calculation

Copyright © 2006 IEEE. All rights reserved.
This is an unapproved IEEE Standards Draft, subject to change.

This section defines how to convert an HT MCS to a non-HT basic rate.

It is calculated by using the modulation and coding rate of the related HT PPDU.

For example if an HT PPDU transmission uses QAM and coding rate of ¾ it means, the related non-HT rate is 54 Mbps.

The following rules shall be used to calculate the related non-HT Basic Rate:

Non-HT_Reference_Rate = Table n52 (Modulation, Coding rate)

The Non-HT Basic Rate is the highest rate in the BSSBasicRateSet that is less than or equal to the Non-HT_Reference_Rate of the immediately previous frame in the frame exchange sequence

Table n52 – Non-HT Rate reference

Modulation	Coding rate (R)	Non-HT reference rate (Mbits/s)
BPSK	½	6
BPSK	¾	9
QPSK	½	12
QPSK	¾	18
16-QAM	½	24
16-QAM	¾	36
64-QAM	2/3	48
64-QAM	¾	54
64-QAM	5/6	54

9.7 MSDU transmission restrictions

Change the text of the third paragraph as follows:

For all transmissions ~~not using the acknowledgement policy of Block Ack~~ of frames which are not sent within the context of a block ack agreement, a QSTA shall ensure that no more than one MSDU or MMPDU with a particular TID from a particular SA to a particular individual RA is outstanding at any time. Note that a simpler, more restrictive invariant to maintain is that no more than one MSDU with any particular TID with a particular individual RA may be outstanding at any time. This restriction is not applicable for MSDUs that are to be transmitted using the Block Ack mechanism.

9.8 Operation across regulatory domains

9.9 HCF

9.9.1 HCF contention-based channel access (EDCA)

Copyright © 2006 IEEE. All rights reserved.
This is an unapproved IEEE Standards Draft, subject to change.

9.9.1.1 Reference Implementation

9.9.1.2 EDCA TXOPs

Modify the second paragraph of Section 9.9.1.2 as follows:

The TXOP limit duration values are advertised by the QAP in the EDCA Parameter Set information element in Beacon and Probe Response frames transmitted by the QAP. A TXOP limit value of 0 indicates that a single MSDU or MMPDU or A-MSDU or A-MPDU along with any ACK or Block Ack response frame, in addition to a possible RTS/CTS exchange or CTS to itself, may be transmitted at any rate for each TXOP.

9.9.1.3 Obtaining an EDCA TXOP

9.9.1.4 Multiple frame transmission in an EDCA TXOP

Change the first paragraph of Section 9.9.1.4 as follows:

Multiple frames may be transmitted in an acquired EDCA TXOP following the rules in 9.9.1.3 if there are more than one frame pending in the AC for which the channel has been acquired. However, those frames that are pending in other ACs shall not be transmitted in this EDCA TXOP. If a QSTA has in its transmit queue an additional frame of the same AC as the one just transmitted and the duration of transmission of that frame plus any expected acknowledgment for that frame is less than the remaining medium occupancy timer value, then the QSTA may commence transmission of that frame at SIFS after the completion of the immediately preceding frame exchange sequence. An HT-STA may transmit multiple MPDUs from the same AC as an A-MPDU as long as the duration of transmission of the A-MPDU plus any expected acknowledgment (ACK or Block Ack) response is less than the remaining medium occupancy timer value. Following the ACK or Block Ack response, the HT-STA may commence transmission of another MPDU or A-MPDU at SIFS after the completion of the immediately preceding frame exchange sequence. The HT-STA may retransmit unacknowledged MPDUs within the same TXOP or in a subsequent TXOP. The intention of using the multiple frame transmission shall be indicated by the QSTA through the setting of the duration/ID values in one of the following two ways (see 7.1.4):

a) Long enough to cover the response frame, the next frame, and its response frame.

b) Long enough to cover the transmission of a burst of MPDUs subject to the limit set by dot11EDCATableTXOPLimit.

9.9.1.6 Retransmit procedures

Add the following paragraph at the end of 9.9.1.6:

When A-MSDU aggregation is used, the HT STA maintains a single timer for the whole A-MSDU. The timer is restarted each time an MSDU is added to the A-MSDU. This ensures that no MSDU in the aggregate is discarded before a period of dot11EDCATableMSDULifetime has elapsed.

9.9.3 Admission Control at the HC

Copyright © 2006 IEEE. All rights reserved.
This is an unapproved IEEE Standards Draft, subject to change.

9.9.3.2 Controlled-access admission control

Modify the second paragraph of Section 9.9.3.2 as follows:

The normative behavior of the scheduler is as follows:

— The scheduler shall be implemented so that, under controlled operating conditions, all STAs with admitted TS are offered TXOPs that satisfy the service schedule.

— Specifically, if a TS is admitted by the HC, then the scheduler shall service the non-AP QSTA during an SP. An SP is a contiguous time during which a set of one or more downlink unicast frames and/or one or more polled TXOPs are granted to the QSTA. An SP starts at fixed intervals of time specified in Service Interval field. The first SP starts when the lower order 4 bytes of the TSF timer equals the value specified in Service Start Time field. Additionally, the minimum TXOP duration shall be at least the time to transmit one maximum MSDU size successfully at the minimum PHY rate specified in the TSPEC. If maximum MSDU size is not specified in the TSPEC, then the minimum TXOP duration shall be at least the time to transmit one nominal MSDU size successfully at the minimum PHY rate. For an HT-STA, the specification of the minimum TXOP duration is unchanged, *i.e*, not modified to account for A-MSDU or A-MPDU aggregation. The vendors are free to implement any optimized algorithms, such as reducing the polling overheads, increasing the TXOP duration, etc., within the parameters of the transmitted schedule.

Add the following new subclause:

9.9.4 PSMP NAV operation

A PSMP sequence starts with a PSMP frame immediately followed by DLT and ULT periods. The STA (including AP) which transmits a PSMP frame generates a PSMP TXOP with duration of the value of the Duration/ID field of the transmitted PSMP frame.

STAs which have updated their NAVs in response to the reception of a PSMP frame shall interpret the use of DLT and ULT periods as described in 9.18. During DLT and ULT periods the NAV value continues to count down and it cannot be reset or suspended. Additionally NAV updates may occur due to the reception of other frames not directed toward the receiving STA during the DLT and ULT periods.

All frames sent within a PSMP exchange have the duration/ID field set to the remaining duration of the TXOP.

9.10 Block Acknowledgment (Block Ack)

9.10.1 Introduction

9.10.2 Setup and modification of the Block Ack parameters

A QSTA that intends to use the Block Ack mechanism for the transmission of QoS data frames to a peer should first check whether the intended peer QSTA is capable of participating in Block Ack mechanism by discovering and examining its Delayed Block Ack and Immediate Block Ack capability bits. If the intended

Copyright © 2006 IEEE. All rights reserved.
This is an unapproved IEEE Standards Draft, subject to change.

peer QSTA is capable of participating, the originator sends an ADDBA Request frame indicating the TID for which the Block Ack is being set up. The Block Ack Policy and Buffer Size fields in the ADDBA Request frame are advisory and may be changed by the recipient for an ADDBA setup between a non-HT QSTA. The Buffer Size field in the ADDBA Request frame is advisory and may be changed by the recipient for an ADDBA setup between HT STAs. The Block Ack Policy field set to 1 is not advisory for an ADDBA setup between HT STAs and the recipient shall set the Block Ack Policy subfield value to 1 in its ADDBA response. The receiving QSTA shall respond by an ADDBA Response frame. The receiving QSTA, which is the intended peer, has the option of accepting or rejecting the request. When the QSTA accepts, then a Block Ack agreement exists between the originator and recipient. When the QSTA accepts, it indicates the type of Block Ack and the number of buffers that it shall allocate for the support of this block. If the receiving QSTA rejects the request, then the originator shall not use the Block Ack mechanism.

9.10.3 Data and acknowledgement transfer

9.10.4 Receive Buffer Operation

9.10.5 Teardown of the Block Ack mechanism

Add the follow subclause

9.10.6 Use of Compressed bitmap

The bit "Compressed Bitmap BA" shall be asserted in all BlockAck and BlockAckReq and MTBA and MTBAR sent from one HT STA to another HT STA.

Add the following subclause

9.10.7 N-Immediate BlockAck extensions

This subclause defines an HT extension to the BlockAck feature to support operation on immediate BlockAck agreements established between HT peers.

The N-Immediate extensions simplify immediate BlockAck use with A-MPDU aggregates and reduce recipient resource requirements. They are:

Use of "normal ack" policy in QoS Data frame to solicit ACK in response to non-aggregate PPDU and BlockAck in response to aggregate PPDU

Use of BlockAckReq to solicit immediate BlockAck and update SSN when MSDU life time expires

Copyright © 2006 IEEE. All rights reserved.
This is an unapproved IEEE Standards Draft, subject to change.

Compressed Block Ack bitmap format

Allow the recipient to maintain partial bitmap state. The same memory holding BlockAck state may be used to collect state from different Originators. This record may be reset if the recipient receives transmission of a different originator.

9.10.7.1 BlockAck Extension Architecture

The extended BlockAck rules are explained in terms of the extension architecture contained in this section.

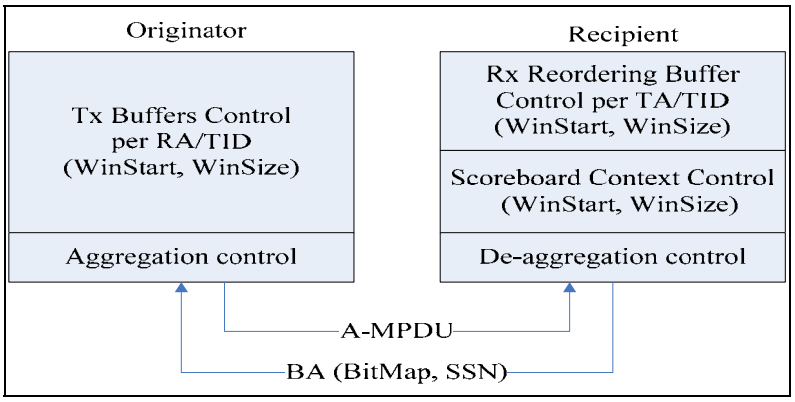

Figure n34 – Extended BlockAck Architecture

The Originator contains a Tx Buffer control that uses WinStart, WinSize to submit MPDUs for transmission and releases the Tx Buffers getting related Block Acknowledgements from Recipient.

WinStart and WinSize are the starting position (sequence number) of the transmit window and the number of buffers negotiated in the BlockAck agreement.

The Aggregation control creates aggregated frames, it may adjust the ack policy field of transmitted QoS Data frames according to the rules defined this section in order to solicit BlockAck responses.

The recipient contains the Rx Reordering Buffer per TA/TID with related control state. This block is responsible for indicating received MSDUs to upper layers in sequence according to received SN. It maintains its own state independent of the Scoreboard Context control to perform this reordering as specified in 802.11e.

For N-Immediate BlockAck agreements, the recipient chooses either full state or partial state operation (this is known only to the recipient). The Scoreboard Context Control stores an acknowledgement bitmap per established N-immediate BlockAck agreement under full state operation or the current context of the partial state under partial state operation. This entity provides the bitmap and SSN to be sent in BlockAck responses to the Originator.

The de-aggregation control entity separates frames aggregated in an A-MPDU.

Each received MPDU is analyzed by the Scoreboard context control, as well by Rx reordering buffer control.

9.10.7.2 Rx reordering buffer control

Copyright © 2006 IEEE. All rights reserved.
This is an unapproved IEEE Standards Draft, subject to change.

WinStart is initialized from the ADDBA SSN value.

On receiving a data MPDU an uninterrupted sequence of complete MSDUs starting from SN = WinStart shall be indicated using the MA-UNITDATA.indication primitive.

WinStart is then updated to the SN of the last released MSDU plus one.

When a BlockAckReq is received, any complete MSDUs with lower sequence numbers than the SSN of the BlockAckReq shall be indicated using the MA-UNITDATA.indication primitive.

The recipient shall indicate MSDUs starting with the SSN sequentially until there is an incomplete MSDU in the buffer or a gap in the sequence number. The recipient shall always indicate MSDUs to its MAC Client in order of increasing sequence number.

9.10.7.3 Scoreboard context control in full state

The scoreboard context control in full state shall maintain a block acknowledgement record as defined in 802.11e. This state includes a bitmap, indexed by sequence number, a starting sequence number WinStart and the maximum window size (WinSize) established during BlockAck setup.

WinEnd is defined as the highest SN in the Transmission Window: WinEnd = WinStart + WinSize -1.

For each received data MPDU received with sequence number SN:

If WinEnd>=SN >= WinStart, the bit in SN position shall be set to one

If SN >WinEnd, bits related to MPDUs with numbers from WinEnd+1 to SN shall be set to zero, WinStart is updated to WinStart=SN-WinSize +1, the bitmap at SN shall be set to one.

Note, comparisons are circular modulo 2^12.

9.10.7.4 Scoreboard context control in partial state

In the partial state the Responder retains the current state while it receives data from the same Originator.

When a different Originator starts transmission the partial state may be discarded and the resources re-used to store the new context.

In partial state operation, WinStart is determined by the SN of received MPDUs, and the next MPDU may validly contain a SN that is lower than the former one. This can happen due to out of order MPDUs or because a previous MPDU transmission with lower SN is not successful. The originator may transmit an MPDU with SN that is lower than any previously sent but must satisfy the constraint (highest_S – lowest_SN) <= WinSize (determined by the negotiated buffer size).

The scoreboard context control of partial state shall maintain WinStart (the lowest SN received), WinEnd (the highest SN in the bitmap), originator address, TID, and a record of the size of Re-ordering Buffer Size indexed by received MPDU sequence control value. WinEnd = WinStart + WinSize -1.

For each received MPDU:

If WinEnd>=MPDU SN >= WinStart, set the bit in SN position

If MPDU SN >WinEnd, reset bits related to MPDUs with numbers from WinEnd+1 till SN, set new WinStart=SN-WinSize +1, set bit in the bitmap at SN

Copyright © 2006 IEEE. All rights reserved.
This is an unapproved IEEE Standards Draft, subject to change.

If MPDU SN < WinStart, set new WinStart = SN, set bit in this position.

Note, comparisons are circular modulo 2^12.

9.10.7.5 Scoreboard context control of BlockAck

The WinStart is used as SSN when it is necessary to transmit a BlockAck as response to A-MPDU containing one or more QoS Data MPDUs with Ack-Policy = Normal ACK.

9.10.7.6 Scoreboard context control of BlockAckReq

Under N-Immediate BlockAck policy, the recipient shall respond to a BlockAckReq, with a BlockAck frame. In the BlockAck frame, the STA acknowledges only the MPDUs starting from the Starting Sequence Control until the MPDU with the highest Sequence Number (modulo 2^12) that has been received, and sets bits in the Block Ack bitmap corresponding to all other MPDUs to 0.

The status of MPDUs that are lower than WinStart shall be reported as successfully received (i.e., the corresponding bit in the bitmap shall be set to 1).

WinStart is set to the SSN from BlockAckReq.

If a BlockAckReq is received and no matching partial state is available, the recipient shall send a “null” BlockAck with an all 0 bitmap.

Note, comparisons are circular modulo 2^12.

9.10.7.7 Originator’s behavior

A block of data may be sent in a single A-MPDU where each data MPDU has “normal ack” policy. The originator expects to receive a BlockAck response if at least one data frame makes it through. If the BlockAck is lost, the originator may use BlockAckReq to solicit immediate BlockAck or it may retransmit the data frames.

Any BlockAckReq shall be sent as an un-aggregated packet.

The originator may send an aggregate with “block ack” policy if it doesn’t require a BlockAck response immediately following the A-MPDU.

All frames within an A-MPDU aggregate shall have the same ack policy setting.

After sending aggregated data under “normal ack” policy, the originator only needs to send a BlockAckReq when it discards a data MPDU due to exhausted MSDULifetime. The purpose of the BlockAckReq is to shift the recipient window past the hole in the SN space created by the discarded data.

9.10.7.8 Maintaining the BlockAck state at the originator

If the originator gets a BlockAck in response to BlockAckReq it shall maintain BlockAck state as required by 802.11e.

If the originator gets a BlockAck in response to N-immediate BlockAckReq, it shall in addition:

Not update the status of MPDUs with sequence numbers between WinStart and SSN of BlockAck

Copyright © 2006 IEEE. All rights reserved.
This is an unapproved IEEE Standards Draft, subject to change.

Not update the status of MPDUs that have been already positively acknowledged

NOTE—The last can happen while getting responses from partial state recipient.

9.10.7.9 Originator's support of Responder's partial state

The originator shall solicit a BlockAck as the last activity directed to that recipient in the current TxOP.

Insert the following subclause

9.10.8 N-Delayed BlockAck extensions

This section defines an extension to the BlockAck feature introduced in 802.11e to support operation on delayed BlockAck agreements established between HT peers.

The N-Delayed extensions simplify its use in A-MPDU aggregate and reduce resource requirements. They are:

Use of "no-ack" in BlockAck/BlockAckReq where an immediate response is not required

Use of compressed Block Ack bitmap format

9.10.8.1 N-Delayed BlockAck negotiation

N-Delayed BlockAck is an optional feature. An HT STA declares support for N-Delayed BlockAck in its HT capabilities.

An HT STA shall not attempt to create a BlockAck agreement under N-Delayed BlockAck policy unless its intended peer declares support for this feature.

9.10.8.2 Operation of N-Delayed BlockAck

The No Ack feature of the BlockAckReq and BlockAck frame may be used under an N-Delayed BlockAck agreement.

No Ack asserted in a BlockAckReq or BlockAck transmission means that no acknowledgement is expected to these control frames. Transmitting a BlockAckReq/BlockAck frame under N-Delayed BlockAck policy with this flag clear indicates that an Ack MPDU response is expected after a SIFS.

Setting of the "no-ack" flag is dynamic, and can change from PPDU to PPDU.

Setting of the "no-ack" flag is independent for the BlockAckReq/BlockAck associated with a N-Delayed BlockAck agreement. All four combinations of "no-ack" used in BlockAckReq and its BlockAck response are valid.

The BlockAck response to an N-Delayed BlockAckReq is transmitted after an unspecified delay, and when the recipient next has the opportunity to transmit. This response may be transmitted in a later TXOP owned by the recipient or in the current or a later TXOP owned by the initiator using the reverse direction feature.

Copyright © 2006 IEEE. All rights reserved.
This is an unapproved IEEE Standards Draft, subject to change.

9.11 No Acknowledgment (No Ack)

9.12 Frame exchange sequences

Replace the contents of subclause 9.12(including all text and associated figures) with the following:

The allowable frame exchange sequences are defined using an extension of the EBNF format as defined in ISO/IEC 14977 : 1996(E). The elements of this syntax that are used here are:

- [a] = a is optional
- {a} = a is repeated zero or more times
- n{a} = a is repeated *n* or more times – *e.g.* 3{a} requires 3 or more "a".
- a|b = a or b
- () = grouping, so "a (b|c)" is equivalent to "a b | a c"
- (* this is a comment *)
- <> = order of frames not relevant – *e.g.* <a b> is either "a b" or "b a"
- A rule is terminated by a semicolon ";"
- Whitespace is not significant, but it used to highlight the nesting of grouped terms.

Two types of terminals are defined:

- **Frames**. A frame is shown in Bold, and identified by its type/subtype – *e.g.* **Beacon, Data.** Frames are shown in an initial capital letter.
- **Attributes**. An attribute is introduced by the "+" character. The attribute specifies a condition that applies to the frame that precedes it. Where there are multiple attributes applied, they are generally ordered in the same order of the fields in the frame they refer to. Attributes are shown in italic.

Non-terminals of this syntax are shown in a normal font, a sequence of words joined by hyphens – *e.g.* cf-frame-exchange-sequence.

The attributes are defined in table 68.

Table 68 – Attributes applicable to frame exchange sequence definition

Copyright © 2006 IEEE. All rights reserved.
This is an unapproved IEEE Standards Draft, subject to change.

Attribute	Description
ampdu	Frame is part of an A-MPDU aggregate
ampdu-end	Frame that precedes is the last frame in an A-MPDU aggregate
block-ack	QoS Data frame has ack policy set to Block Ack
broadcast	Frame RA is the broadcast address
CF	Beacon contains a CFP element
CF-Ack	Data type CF-Ack subtype bit set or CF-End+CF-Ack frame
CF-Poll	Data type CF-Poll subtype bit set
delayed	BlockAck or BlockAckReq under a delayed policy
delayed-no-ack	BlockAck or BlockAckReq frame has No Ack ack policy
DTIM	Beacon is a DTIM
frag	Frame has its More Fragments field set to 1
group	Frame RA has i/g bit set to 1
implicit-bar	QoS Data frame in an aggregate with Normal Ack ack policy
individual	Frame RA has i/g bit set to 0
last	Frame has its More Fragments field set to 0
l-sig	L-SIG duration not equal to PPDU duration
more-psmp	A PSMP frame with the More PSMP field set to 1
mtba	Ack policy of QoS data frame is set to MTBA
no-ack	QoS Data frame has ack policy set to No Ack
no-more-psmp	A PSMP frame with the More PSMP field set to 0
normal-ack	QoS Data frame has ack policy set to Normal Ack
null	Data type Null Data subtype bit set
pifs	Frame is transmitted using a PIFS
QAP	Frame is transmitted by a QAP
QoS	Data type QoS subtype bit set
RD	Frame has an HTC with the RD flag set
self	Frame RA = TA

The allowable frame exchange sequence is defined by the rule frame-sequence. Except where modified by the pifs attribute, frames are separated by a SIFS.

(* This rule defines all the allowable frame exchange sequences *)
frame-sequence =
[**CTS**] (**Management**+*broadcast* | **Data** + *group*) |
[**CTS | RTS CTS | PS-Poll**] {*frag* **Ack**} *last* **Ack** |
PS-Poll Ack |
[**Beacon** + *DTIM*] {cf-sequence} [**CF-End** [+*CF-Ack*]] |
hcf-sequence;

(* A frag is a non-final part of a directed MSDU or MMPDU *)
frag = (**Data**|**Management**)+*individual*+*frag*;

(* This is the last (or only) part of a directed MSDU or MMPDU *)
last = (**Data**|**Management**)+*individual*+*last*;

(* A cf-sequence expresses all the sequences that may be generated within a contention free period. The first frame in this sequence is sent by the AP. *)
cf-sequence =
Beacon | **Management**+*broadcast* | **Data**+group [+*QoS*] | (*Broadcast *)
Data+*individual*+*CF-Poll* [+*CF-Ack*] (* CF poll without data *)
(**Data**+*individual*+*CF-Ack* [**Data**+*null*+*CF-Ack*] |

Copyright © 2006 IEEE. All rights reserved.
This is an unapproved IEEE Standards Draft, subject to change.

```
                Data+null+CF-Ack)                |                (* CF poll with data *)
                Data+individual+null+CF-Poll [+CF-Ack]
                                (Data + null |
                                Data+individual ( Data+null+CF-Ack | Ack )) |
                Management+individual Ack |     (* individual management *)
                hcf-sequence;                   (* All the sequences initiated by an HC *)

(* An hcf-sequence represents all the sequences that may be generated under HCCA. The sequence may be
initiated by an HC within a CFP,  or it may be initiated by a QSTA using EDCA channel access. *)
hcf-sequence =
                [CTS]  1{(Data+group [+QoS] | Management+broadcast)+pifs}  |
                [CTS] 1{txop-sequence} |
                (* HC only – polled TXOP delivery *)
                [RTS CTS] non-cf-ack-piggybacked-qos-poll-sequence |
                (* HC only – polled TXOP delivery *)
                cf-ack-piggybacked-qos-poll-sequence |
                (* HC only – self TXOP delivery or termination *)
                Data+self+null+CF-Poll+QoS;

(* A poll-sequence is the start of a polled TXOP,  in which the HC delivers a polled TXOP to a QSTA.
The poll may or may not piggyback a CF-Ack according to whether the previous frame received by the HC
was a Data frame. *)
poll-sequence =
                non-cf-ack-piggybacked-qos-poll-sequence |
                cf-ack-piggybacked-qos-poll-sequence;

(* A cf-ack-piggybacked-qos-poll-sequence is the start of a polled TXOP that also delivers a CF-Ack.
There are two main variants,  polls that deliver data, and therefore need acknowledgement,  and polls that
do not. *)
cf-ack-piggybacked-qos-poll-sequence=
                qos-poll-requiring-no-ack+CF-Ack (
                                [CTS+self] polled-txop-content |
                                polled-txop-termination) |
                qos-poll-requiring-ack+CF-Ack (
                                Ack (
                                                polled-txop-content |
                                                polled-txop-termination) |
                cf-ack-piggybacked-qos-data-sequence);

(* A non-cf-ack-piggybacked-qos-poll-sequence is the start of a polled TXOP that does not deliver a CF-
Ack.   Except for this, it is identical to the CF-Ack version. *)
non-cf-ack-piggybacked-qos-poll-sequence=
                qos-poll-requiring-no-ack (
                                [CTS+self] polled-txop-content |
                                polled-txop-termination) |
                qos-poll-requiring-ack (
                                Ack (
                                                polled-txop-content |
                                                polled-txop-termination) |
                cf-ack-piggybacked-qos-data-sequence);

(* This sequence is the delivery of a single frame that is the TXOP poll frame, that does not require
acknowledgement – either because the frame carries no data,  or because the frame carries data that does
not require immediate acknowledgement. *)
qos-poll-requiring-no-ack =
```


Copyright © 2006 IEEE. All rights reserved.
This is an unapproved IEEE Standards Draft, subject to change.

```
                    Data+null+CF-Poll+QoS |
                    Data+individual+CF-Poll+QoS+(no-ack|block-ack);

(* A qos-poll-requiring-ack is the delivery of a single frame that is a TXOP poll frame, but also carries data
that requires immediate acknowledgement. *)
qos-poll-requiring-ack =
                    Data+individual+CF-Poll[+CF-Ack]+QoS+normal-ack;

(* Polled-txop-content is what may occur after the delivery of a polled TXOP. A QSTA transmits the first
frame in this sequence *)
polled-txop-content = 1{txop-sequence} [polled-txop-termination];

(* A polled-txop-termination may be used by a QSTA to terminate the polled TXOP.   The data frame is
addressed to the HC,  which regains control of the medium and may re-use any unused polled TXOP
duration. *)
polled-txop-termination = Data+individual+null+QoS+normal-ack Ack;

(* A TXOP (either polled or EDCA) may be filled with txop-sequences, which are initiated by the TXOP
holder.  *)
txop-sequence =
                    (RTS CTS | CTS+self) Data+individual+QoS+(block-ack|no-ack) |
                    [RTS CTS] (
                                        txop-part-requiring-ack txop-part-providing-ack |
                                        (Management|(Data+QAP))+individual Ack |
                                        BlockAckReq BlockAck) |
                    ht-txop-sequence;

(* These frames require acknowledgement *)
txop-part-requring-ack =
                    Data+individual[+null]+QoS+normal-ack |
                    BlockAckReq+delayed |
                    BlockAck+delayed;

(* These frames provide acknowledgement to the txop-part-requiring-ack *)
txop-part-providing-ack=
                    Ack |
                    (* An HC responds with a new polled TXOP on expiry of current TXOP  *)
                    cf-ack-piggybacked-poll-sequence |
                    (* An HC responds with CF-Ack and its own data on expiry of TXOP  *)
                    cf-ack-piggybacked-data-sequence |
                    Data+CF-Ack;

(* An HC has received a frame requiring Ack with a duration value indicating the end of the TXOP.   The
HC continues the CAP by transmitting its own data. *)
cf-ack-piggybacked-qos-data-sequence =
                    Data+individual+CF-Ack+QoS+(no-ack|block-ack) polled-txop-content |
                    Data+individual+CF-Ack+QoS+normal-ack (
                                        Ack polled-txop-content |
                                        Data+CF-Ack |
                                        cf-ack-piggybacked-qos-poll-sequence);


(* The ht-txop-sequence describes the additional sequences that may  be initiated by an HT STA that is the
holder of a TXOP *)
ht-txop-sequence =
```


Copyright © 2006 IEEE. All rights reserved.
This is an unapproved IEEE Standards Draft, subject to change.

```
                l-sig-protected-sequence |
                long-nav-protected-sequence |
                nav-protected-sequence |
                1{ initiator-sequence };

(* an l-sig-protected-sequence is a sequence protected using the L-SIG TXOP protection feature *)
l-sig-protected-sequence = l-sig-protection-set  1{ initiator-sequence };

(* a long-nav-protected sequence is a sequence protected using the LongNAV protection feature,  which
consists of setting the NAV,  performing one or more initiator-sequences and then resetting the NAV if
time permits. *)
long-nav-protected-sequence = nav-protected-sequence  [nav-reset];
nav-protected-sequence = nav-set 1{ initiator-sequence };

(* This is the sequence of frames that establish protection using the L-SIG TXOP protection method *)
l-sig-protection-set =
                RTS+l-sig CTS+l-sig |
                CTS+l-sig+self |
                Data+individual+l-sig [+null][+QoS+normal-ack] Ack+l-sig |
                Data+individual+l-sig [+null][+QoS+(normal-ack|block-ack)]  |
                Data+group+l-sig [+null][+QoS]  |
                BlockAckReq+l-sig (BlockAck|Ack)+l-sig |
                BlockAck+l-sig Ack;

(* These are the series of frames that establish NAV protection for an HT  sequence *)
nav-set =
                RTS+ CTS |
                CTS+self |
                Data+individual[+null][+QoS+normal-ack] Ack |
                Data+individual[+null][+QoS+(normal-ack|block-ack)]  |
                Data+group[+null][+QoS]  |
                BlockAckReq (BlockAck|Ack) |
                BlockAck Ack;

nav-reset = CF-End;

(* This is an initiator sequence. The different forms arise from whether the initiator transmits a frame that
requires a BlockAck,  and whether it delivers a reverse direction grant.   When a reverse direction grant is
delivered,  the response is distinguished according to whether it demands a BA response from the initiator
or not.  *)
initiator-sequence =
                burst |                         (* No BA expected, no RD granted *)
                burst-BAR BA |                  (* BAR delivered, BA expected.  No RD *)
                burst-RD        (               (* No BAR delivered, RD granted *)
                        burst |
                        burst-BAR initiator-sequence-BA  ) |
                burst-RD-BAR Ack |
                burst-RD-BAR  (
                        burst-BA |
                        burst-BA-BAR initiator-sequence-BA ) |
                ht-ack-sequence;

(* This is the same as the initiator-sequence, except the initiator is constrained to generate a BA response
because a previous reverse direction response demanded contained a BAR *)
initiator-sequence-BA =
```


Copyright © 2006 IEEE. All rights reserved.
This is an unapproved IEEE Standards Draft, subject to change.

```
                burst-BA |
                burst-BA-BAR BA |
                burst-BA-RD     (
                                burst |
                                burst-BAR initiator-sequence-BA ) |
                burst-BA-RD-BAR Ack |
                burst-BA-RD-BAR  (
                                burst-BA |
                                burst-BA-BAR initiator-sequence-BA ) ;

(* These are sequences that occur within an ht-txop-sequence that have an ack response *)
ht-ack-response =
                BlockAck+delayed Ack |
                BlockAckReq+delayed Ack |
                Data+individual[+null][+QoS+normal-ack] Ack;

(* A burst is a sequence of 1 or more packets, none of them requiring a response *)
burst = 1{PPDU-not-requiring-response};

(* A burst containing a BAR *)
burst-BAR = [burst] PPDU-BAR;

(* A burst containing a BA *)
burst-BA = PPDU-BA [burst];

(* A burst containing a BA and BAR,  either in the same packet, or in separate packets. *)
burst-BA-BAR =
                PPDU-BA [burst] PPDU-BAR |
                PPDU-BA-BAR;

(* A burst delivering an RD grant *)
burst-RD = [burst] PPDU-RD;

(* A burst containing a BAR and delivering an RD grant *)
burst-RD-BAR = burst PPDU-RD-BAR;

(* A burst containing a BAR and BA and delivering an RD grant *)
burst-BA-RD-BAR =
                PPDU-BA burst PPDU-RD-BAR |
                PPDU-BA-RD-BAR;

(* A PPDU not requiring a response is either a single frame not requiring response,  or an A-MPDU
aggregate of such frames *)
PPDU-not-requiring-response =
                frame-not-requiring-response |
                1{frame-not-requiring-response+ampdu}+ampdu-end;

(* A frame not requiring response is one of the delayed BA policy frames sent under "no ack" ack policy,
or Data that doesn't require an immediate ack. *)
frame-not-requiring-response =
                BlockAck+delayed-no-ack |
                BlockAckReq+delayed-no-ack |
                Data[+null]+QoS+(no-ack|block-ack);
```


Copyright © 2006 IEEE. All rights reserved.
This is an unapproved IEEE Standards Draft, subject to change.

(* A PPDU containing a BAR is either an unaggregated BAR, or an A-MPDU aggregate containing Data requiring implicit BAR *).

PPDU-BAR=

BlockAckReq |

<

1{**Data**+*QoS*+*implicit-bar*+*ampdu*}

{**Data**+*QoS*+*ampdu*}

> + *ampdu-end*;

(* A PPDU containing both BA and BAR is an A-MPDU aggregate that contains a BA, plus either a BlockAckReq frame, or 1 or more Data frames with requiring implicit BAR. *)

PPDU-BA-BAR=

<

BlockAck+*ampdu* (

BlockAckReq+*ampdu* |

1{**Data**+*QoS*+*implicit-bar*+*ampdu*}

{**Data**+*QoS*+*ampdu*})

> + *ampdu-end;*

(*A PPDU containing BA is either a non-aggregate BlockAck, or an A-MPDU aggregate containing a BlockAck, and also containing data that does not require implicit BAR. *)

PPDU-BA=

BlockAck |

<

BlockAck+*ampdu*

1{**Data**+*QoS*+(*no-ack*|*block-ack*)+*ampdu*}

> + *ampdu-end*;

(* A PPDU delivering an RD grant, but not delivering a BAR is either a Data frame, not requiring immediate acknowledgement, or a BlockAck or BlockAckReq, not requiring immediate acknowledgement *).

PPDU-RD=

Data[+*null*]+*QoS*+(*no-ack*|*block-ack*)+*RD* |

(BlockAck|BlockAck)+*delayed-no-ack*+*RD* |

<

Data+*QoS*+*RD*+*ampdu*

{**Data**+*QoS*+*RD*+*ampdu*}

{**Data**+*QoS*+*ampdu*}

> + *ampdu-end;*

(* A PPDU containing a BAR and delivering an RD grant is either an un-aggregated BlockAckReq frame, or an A-MPDU aggregate containing at least one Data frame with RD and at least one with implicit-bar. These do not have to be the same data frame (but can be). *)

PPDU-RD-BAR=

BlockAckReq+*RD* |

<

Data+*QoS*+*implicit-bar*+*ampdu*

Data+*QoS*+*RD*+*ampdu*

{**Data**+*QoS*[+*implicit-bar*][+*RD*]+*ampdu*} |

Data+*QoS*+*RD*+*implicit-bar*+*ampdu*

{**Data**+*QoS*[+*implicit-bar*][+*RD*]+*ampdu*}

> + *ampdu-end;*

Copyright © 2006 IEEE. All rights reserved.
This is an unapproved IEEE Standards Draft, subject to change.

```
(* A PPDU containing a BA, BAR and granting RD is an A-MPDU aggregate that contains a BlockAck
and at least one data frame containing implicit BAR.  The RD grant may be made on any of these frames,
but shall be made on at least one of them. *)
PPDU-BA-RD-BAR=
        (* RD may be present in BlockAckReq, BlockAck or Data, but is present in at least one
        of these frames *)
        <
                BlockAck+RD+ampdu (
                        BlockAckReq[+RD]+ampdu |
                        {Data+QoS[+implicit-bar][+RD]+ampdu}
        > + ampdu-end |
        <
                BlockAck[+RD]+ampdu
                BlockAckReq+RD+ampdu
        > + ampdu-end |
        <
                BlockAck[+RD]+ampdu (
                        Data+QoS[+implicit-bar]+RD+ampdu
                        {Data+QoS[+implicit-bar][+RD]+ampdu}
        > + ampdu-end;

(* A PSMP sequence is a sequence of PSMP periods ending with a last-psmp *)
psmp-sequence = non-last-psmp last-psmp;
non-last-psmp = PSMP+more-psmp downlink-phase uplink-phase;
last-psmp = PSMP+no-more-psmp downlink-phase uplink-phase;

(* The downlink phase is a sequence of allocations to STA as defined in the
PSMP frame during which they may expect to receive. *)
downlink-phase = {psmp-allocated-time};

(* The uplink phase is a sequence of allocations to STA as defined in the PSMP
frame during which they are allowed to transmit *)
uplink-phase = {psmp-allocated-time};

(* During a time allocation,  one or more packets may be transmitted of
contents defined by psmp-ppdu *)
psmp-allocated-time = 1{psmp-ppdu};

(* The packets that may be transmitted during PSMP are:  isolated MTBA or MTBAR frames, or an A-
MPDU aggregate containing an optional MTBA and one or more data frames sent under the MTBA ack
policy. *)
psmp-ppdu =
        MTBA |
        MTBAR |
        <
                [MTBA+ampdu]
                1{Data+individual+QoS+mtba+ampdu};
        > + ampdu-end;
```

9.13 Protection mechanism for non-ERP receivers

Copyright © 2006 IEEE. All rights reserved.
This is an unapproved IEEE Standards Draft, subject to change.

Insert the following subclause

9.14 Protection mechanisms for different HT PHY options

9.14.1 RIFS Protection

All STAs at the BSS shall protect RIFS sequences when there is at least one non-HT STA associated with this BSS.

9.14.2 Green Field Protection

All STAs in the BSS shall protect Green Field PPDUs when there is at least one non-HT or non-GF STA associated with this BSS.

Insert the following subclause

9.15 L-SIG TXOP Protection

A Rate of 6 Mbps shall be used in L-SIG. The L-SIG field of HT frames with a Mixed Mode PHY header shall contain a value that causes non-HT devices to defer transmission for a period of time corresponding to the length of the rest of the packet, with exceptions defined in this section.

An HT STA shall indicate whether it supports L-SIG TXOP Protection in its L-SIG TXOP Protection Support capability field in association requests and probe responses.

The AP determines whether all HT STA in its BSS support L-SIG TXOP Protection and indicates this in the L-SIG TXOP Protection Full Support bit of its HT Information Element. This bit shall not be set to 1 when any HT STA is associated that does not support L-SIG TXOP Protection.

An infrastructure STA may use L-SIG TXOP Protection if its AP sets L-SIG TXOP Protection Full Support to 1.

NOTE 1—An HT STA can always use L-SIG TXOP Protection if its AP sets this bit to 1 because the AP has already checked that all possible peers of the STA support L-SIG TXOP Protection.

A STA should not use L-SIG TXOP Protection if its peer does not support it.

NOTE 2—this means that the STA should check its intended peer (unless the previous rule tells it doesn't have to) to see if it supports L-SIG TXOP protection. A STA might not want to go through the expense of a probe request/response the first time round. But once lack of support for L-SIG TXOP protection has been determined, use of this technique does not achieve adequate protection.

Under L-SIG TXOP Protection operation, the L-SIG field with a Mixed Mode PHY header shall contain a duration value equivalent (except in the case of RTS as described below) to the MAC duration included in

Copyright © 2006 IEEE. All rights reserved.
This is an unapproved IEEE Standards Draft, subject to change.

the MAC header. An L-SIG field that contains a value that does not directly represent the actual duration of the frame is called an L-SIG Duration.

Non-HT devices are not able to receive any subsequent PPDU that starts during the L-SIG duration. Therefore, no frame shall be transmitted to a non-HT receiver during an L-SIG protected TXOP.

L-SIG TXOP Protection should not be used and the Implementers of L-SIG TXOP Protection are advised to include a NAV based fallback mechanism, if it is determined that the mechanism fails to effectively suppress non-HT transmissions. How this is determined is outside the scope of this document.

TXOP truncation is not allowed in combination with L-SIG TXOP Protection, because the non-HT device receiving state cannot be reset through the transmission of a MAC frame. This implies that CF-End frames shall not be transmitted to truncate a NAV that is established through the use of L-SIG TXOP Protection. This avoids potential unfairness or a capture effect involving non-HT devices.

9.15.1 L-SIG TXOP Protection Rules at the Initiator

Under L-SIG TXOP Protection rules, an initiator may use RTS/CTS to establish protection.

Under L-SIG TxOP Protection operation, the L-SIG field of an RTS with a Mixed Mode PHY header shall contain a duration value that protects RTS_frame + (RTS_MM_Preamble_Length - Non-HT_Preamble_Length)

An HT STA using L-SIG TXOP protection shall use an accurate prediction of the TXOP duration inside the Duration field of the MAC header to avoid inefficient use of the channel capability.

If the RTS/CTS handshake succeeds (i.e. upon reception of a L-SIG TXOP Protection CTS addressed to the initiator), all mixed mode PPDUs transmitted inside an L-SIG TXOP Protection protected TXOP shall contain an L-SIG Duration up to the endpoint of the MAC Duration.

The initiator should send a CF_End frame carried in a basic rate non-HT PPDU, SIFS after the L-SIG TXOP protected period. This enables third party devices to terminate EIFS procedure to avoid potential unfairness or a capture effect.

9.15.2 L-SIG TXOP Protection Rules at the Responder

On receiving an RTS frame addressed to itself, a responder that asserted the L-SIG TXOP Protection support bit upon association, may generate an L-SIG TXOP Protection CTS frame with the L-SIG Duration = (MAC Duration of RTS – SIFS – L-Preamble).

After transmission of an L-SIG TXOP Protection CTS the responder's mixed mode PPDU transmissions shall contain an L-SIG Duration up to the endpoint of the MAC Duration.

A STA shall only transmit a response frame containing an L-SIG Duration in response to a frame that also contained an L-SIG duration.

9.15.3 L-SIG TXOP Protection Rules at Third Party HT

An HT receiver that asserted the L-SIG TXOP Protection support bit upon association, and that receives an L-SIG protected PPDU in which it can not decode a MAC duration shall update it's NAV to a value equal to L-SIG duration – HT-SIG duration. This NAV update operation takes place at the termination of the time/length value represented in the HT-SIG field.

Copyright © 2006 IEEE. All rights reserved.
This is an unapproved IEEE Standards Draft, subject to change.

Insert the following subclause

9.16 Protection mechanisms for Aggregation Exchange Sequences

9.16.1 Generally

The following techniques may be used to achieve protection using a MAC layer technique:

— A contention-free-period of a beacon containing a CF parameter set.

— The HC may deliver a polled TXOP to an HT STA. The whole of the TXOP is protected by the duration field in the QoS CF-poll.

— The HC uses its privileged channel access (after a PIFS) and starts a CAP with transmission of a CTS-to-self frame.

— A TXOP may be started with an RTS/CTS exchange, providing NAV protection of the duration specified in these control frames.

— A TXOP may be started with a DATA/ACK exchange providing NAV protection of the specified duration

9.16.2 Long NAV

When a STA holds a TXOP, it may set a long NAV value intended to protect multiple PPDUs using a single protection MAC layer protection exchange, e.g., RTS/CTS.

The STA may be able to accurately predict the duration of these PPDUs, in which case it can set duration values in a protection exchange accurately.

However, it may not be able to predict the duration accurately. Setting a longer NAV allows it to respond to the following events:

Retries of failed transmissions in the current exchange

Adaptation of transmit parameters by training feedback during the current exchange

Transmission of MSDUs arriving at the MAC Data SAP during the current exchange

LongNAV protection is defined as selecting a duration value, limited by the remaining duration in the current TXOP and setting the NAV to this value using one of the MAC layer protection techniques. The duration field in aggregated frames shall contain the remaining duration of TxOP (referenced to the end of the PPDU carrying the frame). All single frames sent in the TxOP by Initiator or Responder shall contain remaining of TxOP in the duration field.

An example in Figure n35 shows use of LongNAV

In this example, an RTS/CTS exchange establishes NAV protection of the TXOP.

There then follows a sequence of transmissions of aggregates and Block ACK responses from the responder.

Copyright © 2006 IEEE. All rights reserved.
This is an unapproved IEEE Standards Draft, subject to change.

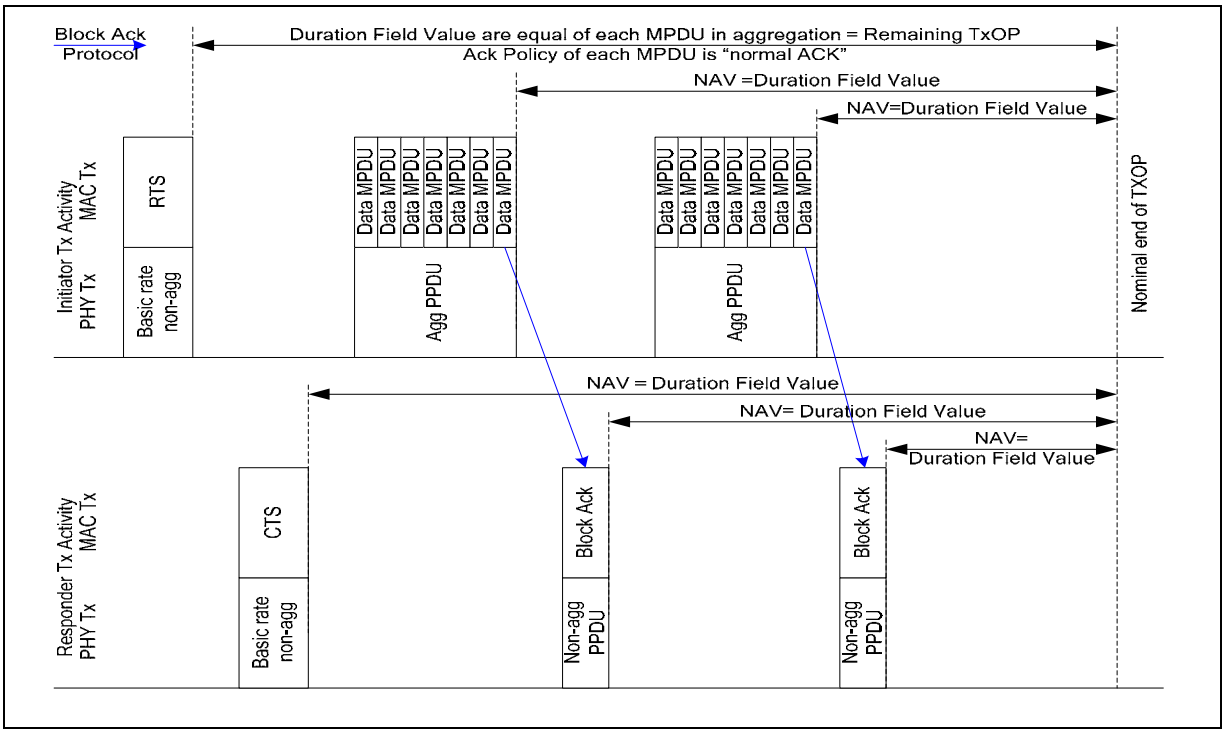

Figure n35 – Example of LongNAV Operation

9.16.3 Truncation of TXOP

In the case when a STA gains access to the channel using EDCA and uses LongNAV to protect a duration value, and then runs out of frames to transmit, the STA may transmit a CF-End provided that the remaining duration is long enough to transmit this frame. By transmitting the CF-End frame, the STA is explicitly indicating the completion of its TXOP.

This shall be interpreted by HT STAs and is interpreted by non-HT STAs as a NAV reset – i.e. they reset their NAV timer to zero at the end of the PPDU containing this frame. [3] After receiving a CF-End with a matching BSSID, an AP may respond with a CF-End after SIFS.

[3] Note, the transmission of a single CF-End MPDU by the initiator resets the NAV of devices hearing the initiator. There may be devices that could hear the responder that had set their NAV that do not hear this NAV reset. Those devices will be prevented from contending for the medium until the original NAV reservation expires

Copyright © 2006 IEEE. All rights reserved.
This is an unapproved IEEE Standards Draft, subject to change.

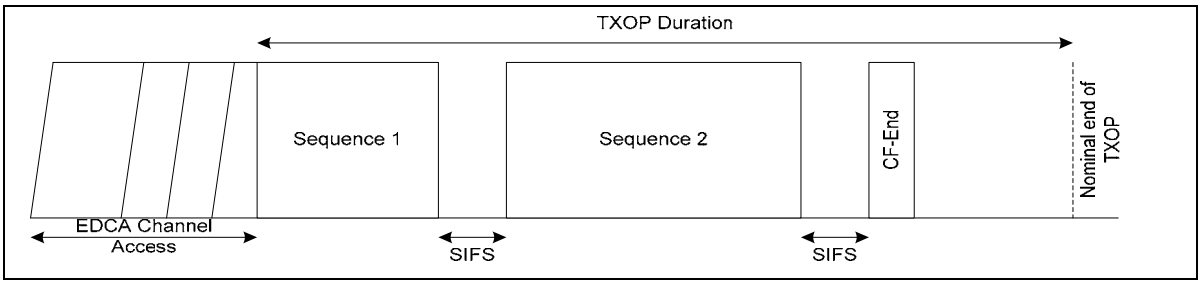

Figure n36 – Example of TXOP Truncation

In the example above the device accesses the medium using EDCA channel access and then engages in two sequences of PPDUs in the initiator role. Each sequence may include multiple PPDUs sent and received.

At the end of the second sequence, the initiator has no more data that it can send that fits within the TXOP, so it truncates the TXOP by transmitting a CF-End frame.

HT STAs and non-HT STAs that receive this frame reset their NAV and can start contending for the medium without further delay.

TXOP truncation shall not be used in combination with L-SIG TXOP Protection, because a CCA cannot be reset through the transmission of a MAC frame.

This avoids potential unfairness or a capture effect for non-HT devices.

Insert the following subclause

9.17 Reverse direction

9.17.1 Reverse direction aggregation exchanges

During a reverse direction transmit sequence, the initiator STA may transmit PPDUs and obtain response PPDUs from a single (responder) STA during the exchange.

The reverse direction mechanism enables the generation of a response burst, which may contain one or more PPDUs. The More PPDU field in the HT Control field is used to indicate non-final PPDUs.

Under the reverse direction rules, the responder shall only generate a response containing more than one PPDU or containing Data if the RDG field is set to 1 in the previous PPDU.

The response starts a SIFS after the end of the PPDU containing RDG=1. Any PPDUs in a response burst are separated by SIFS or RIFS. The RIFS rules in the reverse direction are the same as in the forward direction: the use of RIFS is limited as defined in Table n5. RIFS may not be used if there are APSD non-HT devices associated.

When a PPDU is not the final PPDU of a response burst, an HT Control field carrying the More PPDU field set to 1 shall be present in every frame capable of carrying the HT Control field. The last response PPDU shall have the "More PPDU" field set to 0 in all +HTC frames contained in that PPDU.

Copyright © 2006 IEEE. All rights reserved.
This is an unapproved IEEE Standards Draft, subject to change.

During a response burst, only the responder may transmit – i.e. there are no transmissions by other STA, including the initiator. See Figure n37 for an example of this:

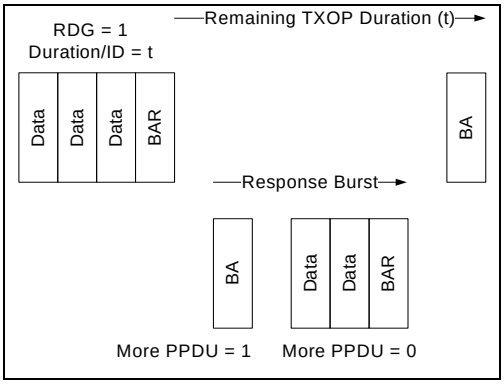

Figure n37 – Example of RD Operation showing response burst

The responder shall ensure that its PPDU transmission(s) and any expected responses fit entirely within the remaining TXOP duration, as indicated in the Duration/ID field of the PPDU carrying the RDG.

9.17.2 Bi-Directional Data Exchange Rules

Transmission of an frame by an initiator with the RDG flag set to 1 (either transmitted by itself, or as part of an aggregation) indicates that the remaining TXOP duration is available for a response burst.

An initiator that sets the RDG flag to 1 shall set the AC Constraint field to 1 if the TXOP was gained through the EDCA channel access mechanism, and shall set it to 0 otherwise.

If the AC Constraint field is set to 1, the responder shall transmit Data frames of only the same AC as the last Data frame received from the initiator. If the AC Constraint field is set to 0, the responder may transmit Data frames of any TID.

The responder shall not transmit any frames that are not addressed to the initiator as the RA.

The RDG/More PPDU field shall be set to the same value in all HT Control fields present in a PPDU.

Subject to TXOP constraints, after transmitting a PPDU containing the RDG field set to 1:

— **Normal Continuation:** The initiator may transmit its next PPDU a minimum of a SIFS after receiving a response PPDU with the "More PPDU" flag set to 0.

— **Error Recovery:** The initiator may transmit its next PPDU when the medium is sensed idle for PIFS (this is a continuation of the current TXOP). If the initiator receives a PPDU that does not carry the "More PPDU" flag, it shall not transmit any earlier than a PIFS.

NOTE 1—after transmitting a PPDU containing a reverse direction grant, if the response is corrupted so that the state of the "More PPDU" flag is unknown, the previous paragraph does **not** allow transmission after SIFS. Transmission may occur a PIFS after deassertion of carrier sense, unless a later response PPDU is correctly received containing "More PPDU" set to 0.

NOTE 2—after transmitting a PPDU not containing a reverse direction grant, the state of the "More PPDU" flag does not affect the behavior of the initiator. If the response is corrupted (i.e. PPDU length known, but MPDU CRC failure), the initiator continues transmissions after a SIFS (subject to TXOP constraints).

Copyright © 2006 IEEE. All rights reserved.
This is an unapproved IEEE Standards Draft, subject to change.

NOTE 3—Error recovery of the RDG mechanism is the responsibility of the initiator.

9.17.3 Constraints regarding responses

The first PPDU of any response burst shall contain any response frames as required to respond to the previous PPDU.

Only the last PPDU of a response burst may contain an frame requiring an immediate response.

The initiator may interpret the presence of any frame in a response PPDU requiring an immediate response as an implicit indication of "More PPDU==0".

After transmitting a PPDU containing More PPDU set to 0, the responder shall not transmit any more PPDUs within the current response burst.

NOTE—if the responder transmits a PPDU that expects a transmission by the initiator after SIFS, and no such transmission is detected, the responder has to wait for either another reverse direction grant or its own TXOP before it can retry the exchange.

Insert the following subclause

9.18 PSMP

9.18.1 Scheduled PSMP

9.18.1.1 PSMP sequence

Once a STA has created a traffic stream using scheduled PSMP, the AP periodically initiates a PSMP sequence by transmitting a PSMP frame according to the service period (Service Start Time) within the TSPEC.

The start time of a PSMP sequence should be aligned with the start time of S-APSD. Within any arbitrary single PSMP sequence duration, multiple numbers of additional subsequent PSMPs (Sub-PSMPs) can be transmitted by AP in order to allow more precise resource allocation and error recovery. An initial PSMP followed by one or more Sub-PSMPs is termed Multi-phase PSMP.

Copyright © 2006 IEEE. All rights reserved.
This is an unapproved IEEE Standards Draft, subject to change.

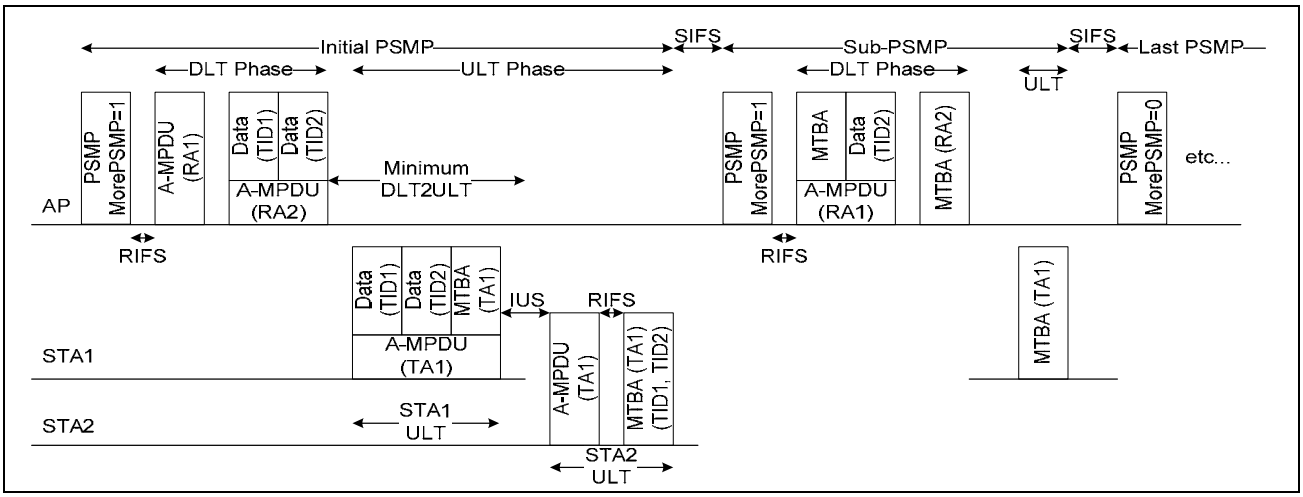

Figure n38 – PSMP sequence

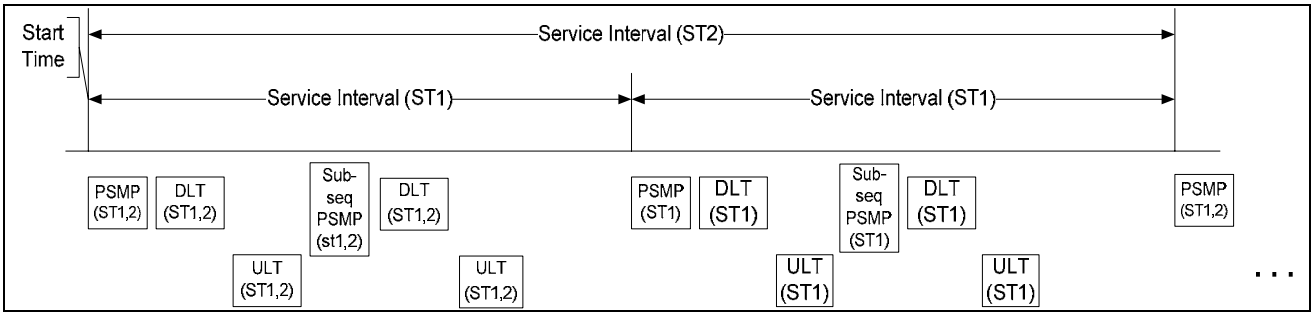

Figure n39 – Different Service intervals of different STAs

An AP may gain access to the channel after a PIFS in order to start transmission of PSMP sequence. CTS-to-self may be sent before each PSMP. The PSMP may follow the CTS-to-self after a PIFS delay to allow sensing of the physical carrier. The PSMP frame shall be sent at a non-HT basic rate.

The Minimal DLT2ULT delay is minimal time between DLT and ULT phases of the same STA and shall be 32us. This value indicates minimum time the STA is provided to react to MTBA and data received during DLT with related data and MTBA in ULT. Within a PSMP sequence, if the number of STAs that are involved cannot ensure this required delay, the AP shall delay the start of the entire ULT phase to meet this constraint. The time between the downlink and the delayed uplink may be protected using one or more CTS-to-self transmissions.

A PSMP sequence (scheduled or unscheduled) may be used to transmit Broadcast/Multicast frames along with unicast frames. Unicast frames shall be scheduled after Broadcast/Multicast frames.

Unicast entries in the PSMP should have their DLT and ULT Start Offsets scheduled to minimize the number of on/off transitions or to maximize the delay between their DLT and ULT periods. Entries that have only DLT should be scheduled closer to the start of DLT's, Entries that have only ULT should be scheduled towards the end of ULTs, Entries that have both DLT and ULT should be scheduled closer to the transition point from Downlink to Uplink transmissions.

Copyright © 2006 IEEE. All rights reserved.
This is an unapproved IEEE Standards Draft, subject to change.

Frames of different TSID may be transmitted an DLT or ULT allocation of a (Scheduled or Unscheduled) PSMP sequence without regard to Access Category.

9.18.1.1.1 Down Link Transmission

During a PSMP sequence, a STA is only required to be able to receive during its scheduled DLT.

The AP shall ensure that any transmissions within a PSMP sequence to a STA participating in the PSMP sequence occur wholly within its DLT.

The DLT transmission may contain one or several A-MPDUs and/or MPDUs containing payload and MTBA directed to STA according to the schedule transmitted in the PSMP.

PPDUs may be separated using RIFS or SIFS. RIFS shall only be used when the AP's Additional Information Elements RIFS mode field contains the value 1.

Multiple RA are supported by separate PPDUs separated by RIFS or SIFS as described above. This is shown in Figure n40 below.

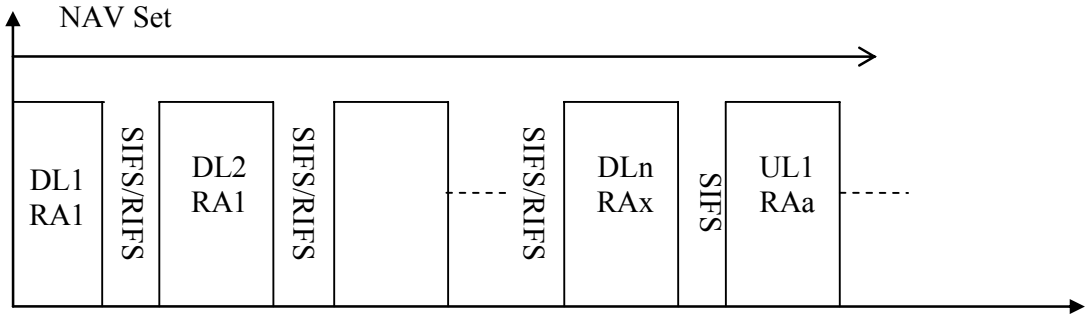

Figure n40 – Multiple RA packet transmission with RIFS or SIFS

9.18.1.1.2 Up Link Transmission

A STA starts transmitting without performing CCA at the start of its ULT Offset.

Even, if a STA has more data queued than the allocated time for its ULT, the STA shall release the medium at the end of the allocated duration.

ULT reserves time for each scheduled PSMP STA to send one or several A-MPDUs and/or MPDUs containing payload and MTBA directed to AP as required.

The STA my use the "TSID set" field in the PSMP to determine which frames to transmit. It may use the TSIDs set field to simplify its frame selection decision if there are frames of several TSIDs ready to be transmitted. The STA decides which TSIDs to use and is not limited to the set indicated in the PSMP frame. The STA is free to ignore the value of this field.

Copyright © 2006 IEEE. All rights reserved.
This is an unapproved IEEE Standards Draft, subject to change.

The AP may set the TSID field to all zeroes, indicating that no information is available about recommended TSIDs.

PPDUs may be separated over RIFS or SIFS. RIFS shall only be used when the STA's AP transmits an Additional Information Element RIFS mode field contains the value 1.

The AP may reuse any unused ULT in scheduled or unscheduled PSMP.

The AP may gain control of the channel whenever the channel remains idle for a PIFS time from the start of an ULT duration. The AP may transmit a PSMP-recovery frame if the currently scheduled ULT duration is longer than the total time of PSMP-recovery frame plus PIFS. The PSMP-recovery frame will modify the schedule of the currently scheduled STA only. The schedule of other STAs will remain unchanged. The PSMP-recovery frame may include: (a) a modified ULT (and/or DLT) for the currently scheduled STA by adjusting the time remaining after PIFS and PSMP-recovery frame and (b) unmodified ULTs for other STAs being originally scheduled after this ULT in the PSMP sequence. The ULT (or DLT) Start Offset is specified relative to the end of the PSMP-recovery frame to compensate for the time already lapsed.

If the currently scheduled ULT duration is shorter than the total time of PSMP-recovery frame plus PIFS, no PSMP-recovery frame will be transmitted."

9.18.1.1.2.1 Scheduling of Up Link Transmissions

The uplink schedule in a PSMP frame shall allow an interval between ULT periods of different STAs of Inter ULT Space (IUS).

IUS shall be either 8us (>RIFS + Propagation time) or SIFS.

The 8us value shall only be used when the AP's Additional Information Elements RIFS mode field contains the value 1.

9.18.2 Multi-phase PSMP

The ULT Duration delivered in a PSMP frame can be determined by the AP, based on the TSPEC associated with each STA. For effective resource allocation, the AP should precisely estimate the ULT duration for each STA using the information indicated in TSPEC, such as Minimum Data Rate, Mean Data Rate, Peak Data Rate, Burst Size, and Delay Bound fields. However, in the case where the traffic characteristic is quite bursty (*e.g.* a real-time video application), precise estimation of ULT Duration is difficult without timely and frequent feedback of the current traffic statistics.

In order to avoid wasting the available bandwidth by overestimating the ULT Duration, the AP may allocate the minimum amount of time to each STA using the ULT Duration field in PSMP, based on Minimum Data Rate in TSPEC, or other local knowledge. When the STA receives the PSMP frame, it decides if the allocated resource indicated by the ULT Duration is sufficient for its queued data. If the allocated resource is sufficient, the STA can transmit all the queued data at the allocated time.

If the allocated ULT Duration is not long enough for its queued data, the STA transmits only the part of the queued data that fits within the allocated ULT Duration and also transmits an additional Resource Request (RR) to the AP. The RR is communicated by setting either the Queue Size field or the TXOP Duration Request field of the QoS Control Field which is carried in a QoS Data frame (Figure n41). By transmitting

Copyright © 2006 IEEE. All rights reserved.
This is an unapproved IEEE Standards Draft, subject to change.

a following Sub-PSMP frame, the AP may allocate an exact ULT Duration based on the RR from the STA sufficient to allow transmission of the remaining queued data.

Multi-phase PSMP supports retransmission as well as additional resource allocation (Figure n42). The frames transmitted in DLT are acknowledged by MTBA in ULT phase within the current PSMP sequence. The frames transmitted in ULT may be acknowledged by MTBA in DLT phase within the following Sub-PSMP. Any failed transmissions during DLT and ULT may be respectively retransmitted in DLT and ULT period of the following Sub-PSMP sequence.

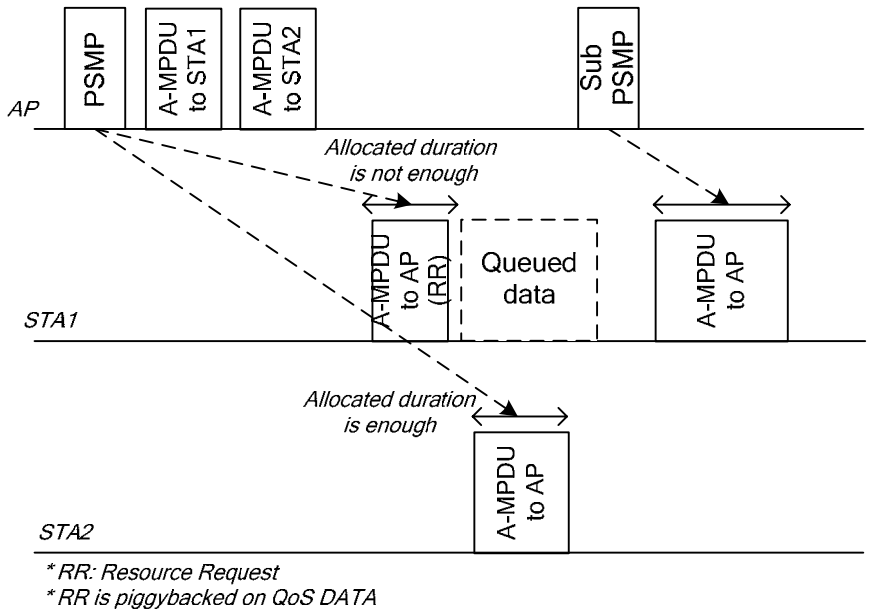

Figure n41 – Multi-phase PSMP showing additional resource allocation

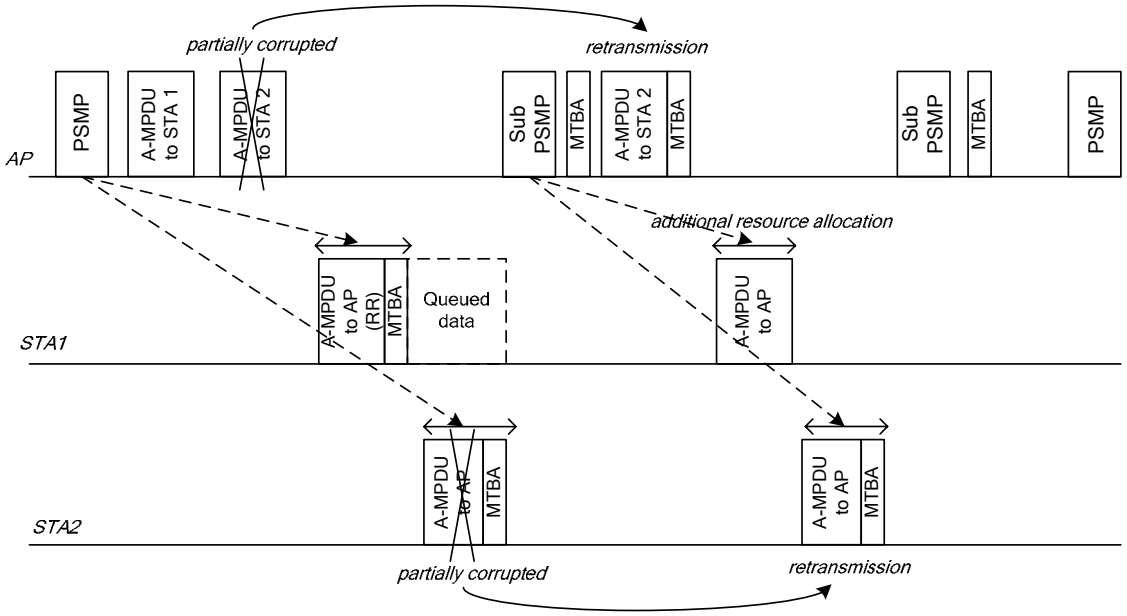

Copyright © 2006 IEEE. All rights reserved.
This is an unapproved IEEE Standards Draft, subject to change.

Figure n42 – Multi-Phase PSMP showing retransmission as well as additional resource allocation

9.18.2.1 PSMP Power management

Power is managed per Service Interval. A STA with an established SP will be awake at beginning of its SP. Once activated at the beginning of SP, the STA will stay active at least until a PSMP is received or the agreed upon maximum SP interval has elapsed, whichever comes first.

The AP shall signal the end of the Service Period for all STA by de-asserting of the More PSMP bit or by sending CF-End instead of the next PSMP.

In order to indicate EOSP on an individual STA basis, the AP signals the end of a service period using the EOSP bit set in the QoS Control field. This bit shall remain set for any retransmissions of the same frame and no more new frames shall be sent to this particular STA in the current Service Interval.

The STA shall wake up at start of the next PSMP if the More PSMP bit is set to 1 in the current PSMP, unless the STA has been permitted to return to sleep or the maximum SP interval has elapsed.

9.18.3 MTBA rules in scheduled PSMP sequence

Data transmitted within a PSMP sequence DLT and ULT shall be acknowledged using MTBA.

Data sent and received by STA may be aggregated in an A-MPDU that contains MPDUs of different TSIDs. Frames of differing TSID may be transmitted in the same DLT or ULT and are not subject of Access Category prioritization.

Acknowledgement may be requested implicitly using the “normal ACK” setting of the ACK policy bits in Data frames or explicitly with MTBAR. In both cases the response is a single MTBA.

A non-AP STA shall use ULT of the current PSMP sequence to transmit an MTBA relating to data received in DLT. The AP shall use the DLT of next PSMP sequence to transmit an MTBA response to data received in the ULT. The next PSMP may be concatenated in the same Service Interval (Sub-PSMP). The number of PSMPs in PSMP sequence is locally limited by the AP.

The AP delivers the data as well the MTBA of related TSPEC in DLT and reserves the ULT only in the Service Intervals scheduled for this RA/TSPEC.

The AP receives any MTBA in ULT of the current PSMP sequence. If the MTBA indicates lost frames the AP may schedule and retransmit those frames in the Sub-PSMP of the same Service Interval or in the next Service Interval. If the AP does not receive an expected MTBA it may schedule and retransmit all unacknowledged frames. Retry (and possibly lifetime) limits are independent per TSID.

9.18.3.1 ULT payload retransmission

A non-AP STA receives any MTBA response to its ULT data transmissions in the DLT of the next PSMP. In the Sub-PSMP of the same Service Interval the AP may reserve ULT to allow STA retransmission of failed frames. The STA may retransmit lost frames in the subsequent PSMP of the same Service Interval if ULT reservation is present or in the first PSMP in the next Service interval.

A STA that cannot complete its retransmissions in the last Sub-PSMP of the current Service Interval because not enough time is allocated in its ULT may transmit the data outside any PSMP sequence. Frames transmitted outside the scheduled SP under EDCA are subject to the Access Category prioritization.

Copyright © 2006 IEEE. All rights reserved.
This is an unapproved IEEE Standards Draft, subject to change.

NOTE 1—in this case the MTBA that acknowledges these frames is delivered in the DLT within the next SP.

NOTE 2—Retry (and possibly lifetime) limits are independent per TSID.

9.18.4 Unscheduled PSMP

An unscheduled SP begins when an AP receives a trigger frame from a non-AP STA. The trigger frame is a QoS Data or QoS Null frame associated with an AC the STA has configured to be trigger-enabled. A PS-Poll may be used as well.

An HT AP may start an unscheduled PSMP that includes STA that are PSMP capable at any time that these STA are awake.

An unscheduled SP ends after the AP has attempted to transmit at least one MSDU or MMPDU associated with a delivery-enabled AC and destined for the non-AP STA, but no more than the number indicated in the Max SP Length field if the field has a non-zero value.

The SP of U-PSMP may contain a PSMP frame, Downlink phase and Uplink phase. The Downlink phase of this SP may contain Data related to different AC of different STAs. Multiple data frames directed to the same STA that are associated with delivery-enabled ACs may be aggregated using A-MPDU aggregation. The AP transmits PPDUs to different STAs separated by a RIFS or SIFS interval. The RIFS interval is subject to the same limitation as in DLT of scheduled PSMP.

If a BlockAck agreement exists for frames transmitted within the DLT then an MTBA shall be used for acknowledgements transmitted in the ULT. In this case the ULT is scheduled by AP to allow a STA to respond with an MTBA transmission.

Acknowledgement of data frames transmitted during an ULT is requested implicitly using the Normal ACK setting of the ACK policy bits in data frames or explicitly with MTBAR and responded with MTBA. The AP shall transmit any response to this request as an MTBA frame in the DLT of a subsequent PSMP sequence.

The subsequent PSMP may be used for retransmission.

Under the U-PSMP a STA may transmit data to its AP outside its Service Period using one of the following methods: regular ACK, immediate BlockAck and delayed BlockAck. Under the regular Ack and immediate BlockAck.

NOTE—In this case the AP responds immediately as defined by the response rules for these methods outside a PSMP sequence.

An AP may transmit a BlockAck of a delayed BlockAck agreement in a DLT within a SP using MTBA format.

Insert the following subclause

9.19 Link Adaptation

9.19.1 Introduction (informative)

Copyright © 2006 IEEE. All rights reserved.
This is an unapproved IEEE Standards Draft, subject to change.

To fully exploit MIMO channel variations and transmit beamforming on a MIMO link, a STA may request that another STA provide full MIMO channel sounding and MCS feedback.

Link Adaptation may be supported using either of the following two approaches:

— An immediate response when the responder's MFB is sent in the TxOP obtained by the Initiator. This approach allows the sender to obtain the benefit of link adaptation within the same TXOP.

— The MRQ is transmitted in a TXOP obtained by the sender and the response (MFB) is transmitted in a subsequent TXOP obtained by the responder.

9.19.2 Link Adaptation using the HT Control Field

The sender may set the MRQ bits in the HT Control field to request the responder to provide MCS feedback. The sender may set the MRS field to any value in the range '000-110' every time it transmits a +HTC frame with the MRQ bit set. How the sender chooses the MRS value is implementation dependent. The sender may use the field as a sequence number of the MRQ or it may implement any other encoding of the field. If the HT Control field is included in more than one frame (i.e., more than one +HTC frame) within the same PPDU, the MRQ bit and the MRS field in each +HTC frame shall be set to the same value.

When sender sets the MRQ bit, a response sounding PPDU should be transmitted and sounding bits in HT-SIG shall indicate this if the user wants to get information from more dimensions than the number of spatial streams actually used for PPDU submission.

On receipt of a +HTC frame with the MRQ bit set the responder initiates MCS estimate computation and associates the result of this computation with the MRS value. Hardware and buffer capability may limit the number of MCS estimate computations that a responder is capable of running simultaneously. When a new MRQ is received either from a different sender or from the same sender with a different MRS value, and the responder's number of simultaneous computations is exceeded, the responder may either discard the new request or may abandon an existing request and initiate an MCS estimate computation for the new MRQ.

If the responder discards or abandons computation for an MRQ, it should indicate this to the sender by setting the MFB to "all-ones" in the next transmission of a frame addressed to the sender that includes the HT Control field. The value of the MFS is set to the MRS value to indicate to the sender the correspondence to the MRQ that was discarded.

After the MCS estimate computation is completed, the responder should include the MCS feedback in the MFB field in the next transmission of a frame addressed to the sender that includes an HT Control field. The value of the MFS is set to the MRS value to indicate to the sender the correspondence between the MRQ and the MFB.

If the responder sends an unsolicited MFB, it sets the MFS to the value '111'.

If the HT Control field is included in more than one frame within the same PPDU, the responder may provide MFB corresponding to different MFS values in different frames.

At the end of the TXOP, the final data frame from the initiator, shall not have the MRQ set to '1'if there not enough time left in the TxOP to get the responses.

NOTE—Bidirectional request/responses are permitted. In this case, a STA acts as the sender for one direction of a duplex link transmitting MRQ, and a responder for the other direction, transmitting MFB and including both within the same HT Data frame.

Copyright © 2006 IEEE. All rights reserved.
This is an unapproved IEEE Standards Draft, subject to change.

9.19.3 Immediate Response Frame Exchange for HT Control

Certain frame exchanges are defined as immediate response exchanges. These include RTS/CTS, Data/ACK, Implicit BlockAckReq(BlockAckReq)/BlockAck with immediate Block Ack. If an HT STA includes the HT Control field in the initial frame of an immediate response exchange and the responder HT STA includes the HT Control field in the immediate response frame, the immediate response exchange effectively permits the exchange of HT Control field elements.

If the sender sets MRQ = 1 in the HT Control Field, and the responder completes the MCS estimate in time, it can provide an MFB in the HT Control field in the immediate response. If the MCS estimate is not available in time and if the HT Control field is included in the immediate response frame[4], the responder may set MFB to the default value "all-ones" following the MFS/MRS rules. Subsequently, when the MCS estimate corresponding to the MRQ becomes available at the responder, the responder should include the MCS feedback in the MFB field in the next transmission of a frame addressed to the sender that includes the HT Control field. The value of the MFS is set to the MRS value to indicate to the sender the correspondence between the MRQ and the MFB.

9.19.4 Fast Link Adaptation using explicit feedback

Two types of explicit feedback support fast link adaptation: MCS feedback and channel state feedback.

MCS feedback is carried in an HT Control field in any supported frame type (see 7.1.3.5 and 7.1.3.8).

Channel state feedback is carried in the CSI matrices feedback management action frame defined in 7.4.7.6. This frame may be embedded in a QoS Null + HTC (MA=1) frame with its ack policy field set to "no ack", allowing it to be aggregated with data or control frames using A-MPDU aggregation within an HT frame exchange.

Insert the following subclause

9.20 Transmit Beamforming

9.20.1 Introduction (Informative)

In order for a transmitting STA to calculate an appropriate steering matrix for transmit spatial processing when transmitting to a specific receiving STA, the transmitting STA needs to have an accurate estimate of the channel that it is transmitting over. There are generally two ways of doing this:

— Implicit feedback

— Explicit feedback

With implicit feedback, the Initiator STA receives training symbols (HT-LTFs) from the Responder STA.

[4] The HT Control field may be included in the immediate response frame for other reasons, since HT Control field supports other features, including MRQ in the opposite direction.

Copyright © 2006 IEEE. All rights reserved.
This is an unapproved IEEE Standards Draft, subject to change.

If the channel is reciprocal, then the initiator can use the training symbols that it receives from the responder to make a channel estimate suitable for computing transmit steering matrix. Generally, reciprocity requires calibrated radios in MIMO systems. This will be discussed below.

With explicit feedback, the responder makes a direct estimate of the channel that the initiator is preparing to transmit over, from training symbols sent to the responder from the initiator. The responder may prepare Channel State Information or Steering Matrices. The responder quantizes the result and sends it back to the initiator, which then uses it as is or computes the steering matrix using the data returned by the responder.

9.20.2 Transmit Beamforming with Implicit Feedback

The following section explains AP behavior as a beamformer sending data frames to a STA. The same rules apply to non-AP STAs as well. The AP should be calibrated for best performance, while the receiving client STA does not need to be calibrated for best performance, as long as it does not do transmit beamforming.

A STA that intends to perform one of the roles related to transmitter beamforming with implicit feedback shall support the associated capabilities shown in Table n53.

Table n53 - TxBF Support Required with implicit feedback

Role	Required Support
Reception of transmit beamformed PPDUs	Transmission of sounding PPDUs.
Transmission of beamformed PPDUs	Receiving sounding PPDUs. Computing steering matrices from channel estimates obtained from HT-LTFs received from the responder STA.
A responder in a calibration exchange	Receive and transmit sounding PPDUs. Respond with MIMO channel measurement obtained from receiving of the sounding PPDU.
An Initiator in a calibration exchange	Receive and transmit sounding PPDUs

At the end of the TXOP, the final data frame from the initiator, shall not have the TRQ set to ‘1’if there not enough time left in the TxOP to get the responses.

The frame exchange used in implicit transmit beamforming is shown in Figure n43

Copyright © 2006 IEEE. All rights reserved.
This is an unapproved IEEE Standards Draft, subject to change.

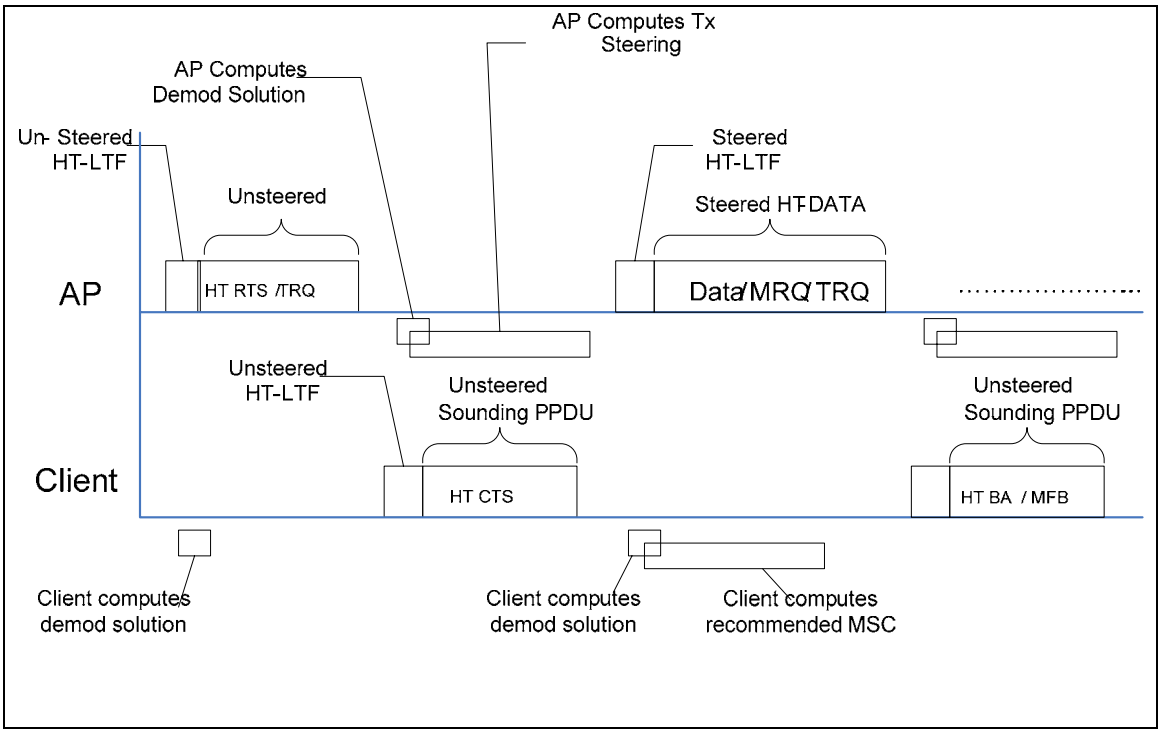

Figure n43 – Frame Exchange Sequence for Transmit Beaforming with Implicit Feedback

The frame exchange can be summarized as follows:

a) The initiating AP sends an un-steered sounding PPDU to the client. The PPDU includes a training request; the sounding PPDU is required.

b) The responding STA returns a sounding PPDU

c) On receiving the sounding PPDU, the initiating AP uses the resulting channel estimate to compute steering matrices, using SVD or other techniques, and uses the resulting steering matrices for sending a beamformed PPDU back to the responder.

d) Repeat b) and c). If the channel estimate resulting from step becomes stale because of delay, then the sequence can be restarted by returning to a).

9.20.2.1 Calibration

9.20.2.1.1 Introduction (Informative)

Transmit beamforming can operate with or without calibration assistance from the receiver. Support for calibration is optional.

Copyright © 2006 IEEE. All rights reserved.
This is an unapproved IEEE Standards Draft, subject to change.

Differences in transmit and receive chains in a STA or AP destroy the inherent reciprocity of the over-the-air Time Division Duplex channel. Calibration is helpful in order to remove differences in transmit and receive chains and enforce reciprocity in the observed baseband-to-baseband channels. A simple over-the-air calibration procedure effectively corrects for these differences. The calibration procedure ensures that the observed channel matrices in the two directions of the link are transposes of each other and thus renders the resultant channel reciprocal. Thus, if it is able to do so, a STA calibrates upon association. Calibration is applicable to any square or non-square dimensionality, i.e., N_{Tx} and N_{Rx} greater than one and less than five.

9.20.2.1.2 Procedure

A STA shall only initiate a calibration training frame exchange sequence with another device that supports calibration.

The calibration procedure begins with a Calibration Sounding frame exchange sequence, illustrated as Step 1 in Figure n44:

STA A transmits a Calibration Start frame (Position field = ‘01’) and TRQ = ‘1’. This frame initiates a calibration procedure. An immediate response with a sounding PPDU is required.

In response, STA B transmits a Calibration Sounding Response (Position field = ’10’) and TRQ=1 after a SIFS interval, which includes sounding (HT-LTFs) that allow STA A to estimate the MIMO channel from STA B to STA A.

In response, STA A transmits a Calibration Sounding Complete (Position field = ’11’) after a SIFS interval, which includes sounding (HT-LTFs) that allow STA B to estimate the MIMO channel from STA A to STA B.

To ensure that the reciprocal channel changes as little as possible during the Calibration Sounding frame exchange sequence, a STA should use short non-aggregate frames in the Sounding Response and Sounding Complete PPDUs.

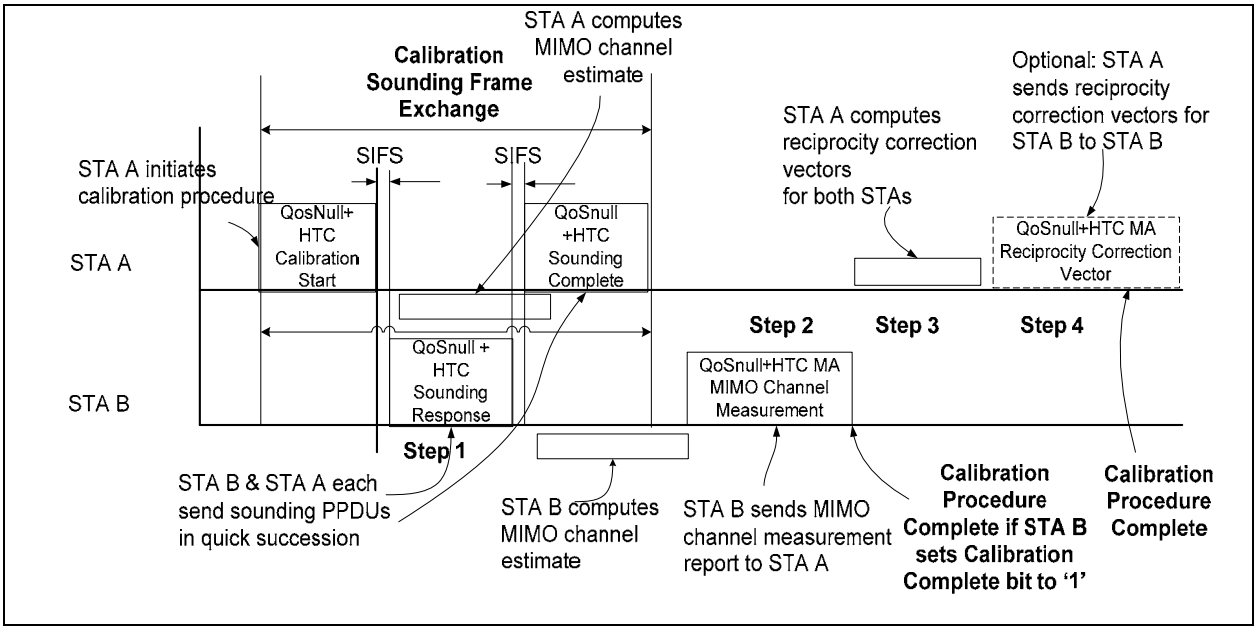

Copyright © 2006 IEEE. All rights reserved.
This is an unapproved IEEE Standards Draft, subject to change.

Figure n44 – Calibration Procedure

The remaining message exchange in the calibration procedure is not time critical.

When the MIMO channel measurements become available at STA B, STA B sends one or more MIMO Channel Measurement frames that contain the MIMO Channel Measurement Report (Step 2 in Figure n44). STA B sets the Calibration Complete bit to '1' in this packet in case the STA B is not capable of transmit beamforming or does not desire to obtain its Reciprocity Correction matrices from STA A. In this case STA A will not send Reciprocity Correction frame and the calibration procedure is complete.

In case that both STAs are capable of transmit beamforming, once STA A has the MIMO Channel Measurement Report from STA B, along with its local channel measurement measured from the Calibration Sounding Response transmitted by STA B, STA A can compute the correction matrices required for both itself and STA B (Step 3 in Figure n44). If STA B did not set the Calibration Complete bit to in the MIMO Channel Measurement frame to '1', STA A transmits the Reciprocity Correction frame to complete the calibration procedure (Step 4 in Figure n44). The message includes the Reciprocity Correction Vector for STA B which provides reciprocity correction on the receive channel estimates at STA B. STA B applies the supplied reciprocity correction to its transmit chain. The Calibration Complete bit in the Reciprocity Correction frame is set to '1'.

9.20.3 Explicit feedback beamforming

9.20.3.1 Introduction (informative)

When using explicit beamforming the initiator is using feedback it receives from the responder to calculate the steering matrices for beamforming. The feedback may have 1 of those 3 formats:

Channel State Information – The responder sends to the initiator the MIMO channel coefficients.

Uncompressed steering matrices – the responder sends to the initiator the calculated steering matrices, the transmitter may use those for transmission as the steering matrices.

Compressed steering matrices – the responder sends to the initiator the compressed steering matrices, the transmitter may use those for transmission as the steering matrices after the de-compression of the data.

9.20.3.2 Feedback request and response rules

There are three feedback types and associated rules:

— **Immediate** – the receiver shall return the feedback a SIFS after end of the PPDU that contains the related request. The feedback may be a single frame or aggregated with another response. The transmitter shall start transmission of the next PPDU no earlier than PIFS after the PPDU containing the request if it did not receive the expected response PPDU.

— **Aggregated** – the receiver may return the feedback aggregated (with A-MPDU aggregation) with a response frame. The transmitter shall not request aggregated feedback if there is not enough time left in TxOP for the response. The transmitter shall not expect getting the feedback of each request.

Copyright © 2006 IEEE. All rights reserved.
This is an unapproved IEEE Standards Draft, subject to change.

— **Unsolicited** – the receiver provides feedback at times of its own choosing (*e.g.* within its own TXOP). An unsolicited request may be transmitted once per association to inform the responder of the expected type of feedback.

The Responder shall use QoS Null +HTC frame with the MA field of the HT Control Field set to 1 for immediate and aggregated feedback of CSI Matrices, Uncompressed Steering Matrices, and Compressed Steering Matrices frames. The Ack policy shall be set to No Ack in the QoS control field.

9.20.3.3 Transmit Beamforming with explicit Feedback

In this example the AP requests and uses the explicit feedbacks of CSI for computing the steering matrices for transmit beamforming (Figure n45). A similar frame exchange can also accommodate computation of the steering matrices at the responder. In this case, instead of sending back CSI, the responding STA will return quantized steering matrices to the initiating AP, and the AP may use it for transmission. The feedback of steering matrices can be compressed or uncompressed. The type of information returned to Initiator is subject of advertised capabilities. The same rules apply to non-AP STAs as well.

The sequence is as follows:

a) The sequence is initiated by an AP which sends an un-steered sounding PPDU containing a CSI Feedback Request.

b) The responding client STA uses the sounding packet to make a channel estimate, and collects the CSI of the channel

c) The CSI are quantized and returned to the AP in a PPDU containing a CFB (CSI Feedback) message.

d) The AP uses the result to transmit a steered PPDU to the client STA. If the AP has subsequent PPDUs to send in steered mode, this PPDU may also be a sounding PPDU.

Steps b), c), and d) may be repeated for an ongoing beamforming exchange. If latencies cause the channel estimates or steering matrices to get stale, then step a) needs to be repeated.

Copyright © 2006 IEEE. All rights reserved.
This is an unapproved IEEE Standards Draft, subject to change.

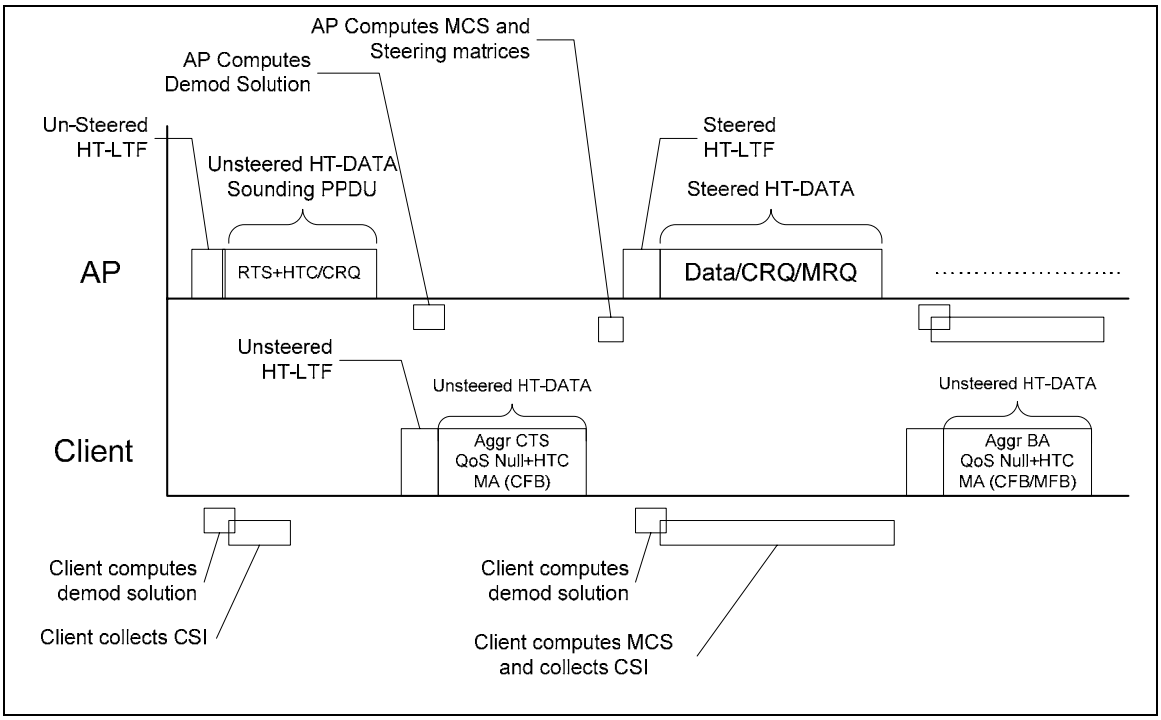

Figure n45 – Frame exchange for transmit beamforming with explicit feedback

Insert the following subclause

9.21 Antenna Selection

9.21.1 Introduction (Informative)

Antenna selection is a possibly time-variant mapping of the signals at the RF chains onto a set of antenna elements, when the number of RF chains is smaller than the number of antenna elements at a STA and/or AP. The mapping can be chosen based on instantaneous or averaged channel state information. Antenna selection requires the training of the full size channel associated with all antenna elements, which is obtained by transmitting or receiving sounding PPDUs over all antennas. These sounding PPDUs should be sent within a single TXOP. To avoid channel distortions, these sounding PPDUs shall be transmitted consecutively. The training information is exchanged by the HT control field, transparent in PHY. When both transmitter and receiver have antenna selection capabilities, training of TX and RX antennas can be done one after another. It is constrained that the number of antenna elements in any STA is no more than 8 and the number of RF chains is no more than 4.

9.21.2 Procedure

Copyright © 2006 IEEE. All rights reserved.
This is an unapproved IEEE Standards Draft, subject to change.

An STA shall only initiate an AS training frame exchange sequence with another device that supports AS.

When transmitter conducts antenna selection, the frame exchange sequence for transmit antenna selection is shown in Figure n46.

a) (Optional) Receiver may initiate the transmit antenna selection training by sending a TX AS sounding request.

b) The transmitter sends out consecutive sounding PPDUs separated by SIFS in a TXOP using burst transmission with no ACK over different antenna sets, with setting TX AS sounding indication, and sounding frame format. A single sounding PPDU is transmitted over one antenna set.

c) (Informative) For example, in case of sounding over all disjointed antenna sets, the number of consecutive sounding PPDUs equals the smallest integer that is greater than or equal to the number of antennas divided by the number of RF chains. These sounding PPDUs should be sent within a single TXOP.

d) The receiver estimates the subchannel corresponding to each sounding PPDU.

e) After receiving all the sounding PPDUs, the receiver may either explicitly feedback the full size channel state information, or conduct antenna selection computation and feedback the selected antenna indices in a subsequent TXOP. The feedback format follows Table n5

1) When feeding back the full size channel information, the QoS Null +HTC with MA field of the HT Control Field set to 1 is used for MIMO CSI Matrices frame feedback defined in subclause 7.4.7.6. Multiple CSI Matrices frames may be required to feedback the full size channel, and all these frames of one feedback should set identical explicit feedback sequence number.

2) When feeding back the antenna indices, QoS Null + HTC frame with MA field of the HT Control Field set to 1 is used for antenna selection indices feedback defined in subclause 7.4.7.9. One octet in antenna selection indices field is used to feedback the selected antenna indices.

In the case that the receiver does not correctly receive the sounding PPDUs, or the current feedback becomes stale, the receiver sends one frame + HTC setting MRQ=’0’, ASI=’111’ and the command part in ASC=’110’ to indicate the failure of antenna selection training process.

Copyright © 2006 IEEE. All rights reserved.
This is an unapproved IEEE Standards Draft, subject to change.

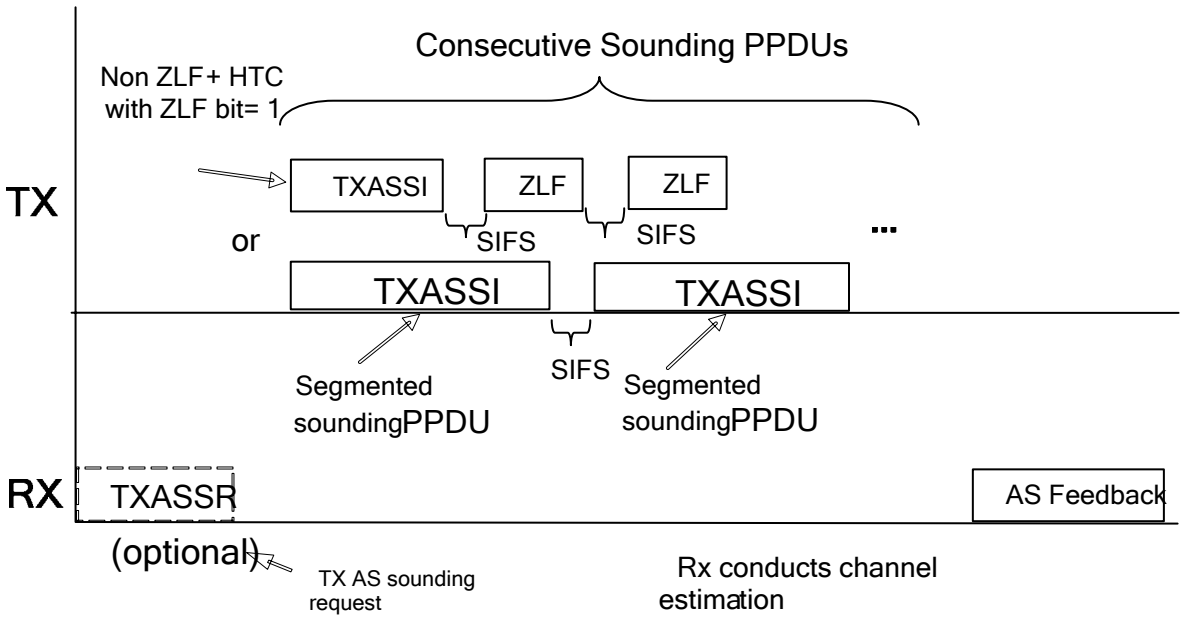

Figure n46 – Frame Exchange Sequence of Transmit Antenna Selection

When receiver conducts antenna selection, the frame exchange sequence is shown Figure n47 – Frame Exchange Sequence of Receive Antenna Selection.

a) The receiver sends out a frame + HTC setting RX AS sounding request in the command part of ASC subfield in HT Control Field field, and the data part in ASC to indicate the number of total sounding PPDUs required.

b) (Informative) For example, in case of sounding over all disjointed antenna sets, the number of total consecutive sounding PPDUs or ZLFs equals the smallest integer that is greater than or equal to the number of antennas divided by the number of RF chains.

c) The transmitter responds with the corresponding number of sounding PPDUs or ZLFs in its subsequent TXOP, using burst transmission with no ACK, with setting RX AS sounding indication, and sounding frame format.

The receiver uses different antenna sets to receive these sounding PPDUs or ZLFs, estimates channel state information after receiving all these sounding PPDUs or ZLFs, and conducts the antenna selection.

Copyright © 2006 IEEE. All rights reserved.
This is an unapproved IEEE Standards Draft, subject to change.

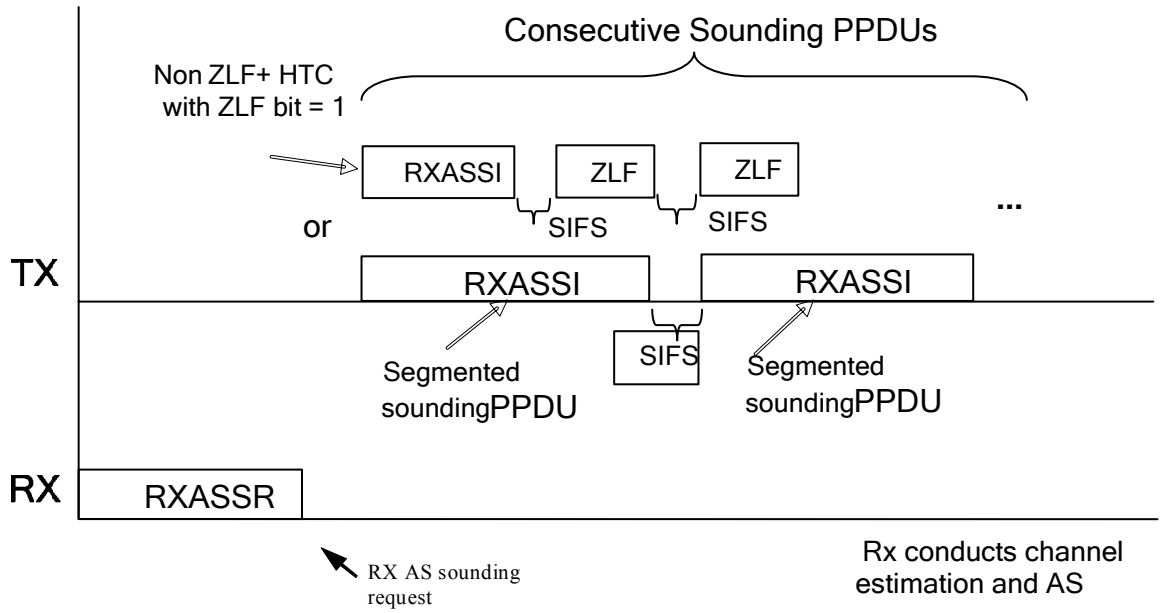

Figure n47 – Frame Exchange Sequence of Receive Antenna Selection

Insert the following subclause

9.22 Zero Length Frame as sounding frame

If an HT-STA has indicated receive capability for zero-length sounding frames in the HT capabilities IE during association, that STA shall process a zero-length MAC frame (ZLF) as a sounding frame if the destination of the sounding frame is determined to match itself as described in this subclause, and if the source of the sounding frame can be ascertained as described in this subclause.

The indicated MAC length of zero within a ZLF shall be an implicit indication that the frame is a sounding frame.

Only the current TXOP owner or RDG grantee shall be permitted to send a ZLF frame.

A transmitter that sends a ZLF shall send the ZLF within SIFS of sending a non-ZLF frame with the ZLF Announcement bit set to 1 which does not require an immediate response or within SIFS of successfully receiving a correctly formed and addressed immediate response to a non-ZLF frame with the ZLF Announcement bit set to 1 which required an immediate response. This rule insures that the ZLF receiver knows that it will receive a ZLF, and that it can ascertain the source and destination of the ZLF.

Feedback from the reception of the ZLF shall be transmitted using unsolicited feedback rules and signaling.

If the reception immediately preceding (within SIFS of the start of the ZLF) the ZLF has an FCS error, then the ZLF shall be dropped by the receiver.

A transmitter may transmit a ZLF within SIFS of a previously transmitted ZLF.

9.22.1 Determination of ZLF destination

Copyright © 2006 IEEE. All rights reserved.
This is an unapproved IEEE Standards Draft, subject to change.

The destination of a ZLF is determined at the ZLF receiver by examining the immediately previous (within SIFS) frame (with respect to the ZLF and with the ZLF Announcement bit set to 1) of a frame exchange as follows:

If the immediately previous frame at the ZLF receiver was a transmission by the TXOP owner or the current RDG grantee, then the destination of the ZLF is equal to the RA of that immediately previous frame.

If the immediately previous frame at the ZLF receiver was a transmission by a STA which is not the TXOP owner or RDG grantee (i.e. a responder to the TXOP owner or RDG grantee), then the destination of the ZLF is equal to the TA of that immediately previous frame.

9.22.2 Determination of ZLF source

The source of a ZLF is determined at the ZLF receiver by examining the immediately previous (within SIFS) frame (with respect to the ZLF and with the ZLF Announcement bit set to 1) of a frame exchange as follows:

If the immediately previous frame at the ZLF receiver was a transmission by the TXOP owner or the current RDG grantee, then the source of the ZLF is equal to the TA of that immediately previous frame.

If the immediately previous frame at the ZLF receiver was a transmission by a STA which is not the TXOP owner or RDG grantee (i.e. a responder to the TXOP owner or RDG grantee), then the source of the ZLF is equal to the RA of that immediately previous frame.

Insert the following subclause

9.23 40/20 Functional description

9.23.1 Rules for operation in 40/20Mhz BSS

A 40/20 Capable STA operating in 20MHz mode follows the rules for a 20MHz capable STA.

A 40/20 Capable STA operating under PCO operates the rules defined in section 11.16.

A 40/20 Capable STA operating under L-SIG TXOP protection operates the rules defined in section 9.15.

Otherwise, it shall operate as defined in this section.

9.23.2 STA CCA sensing 40/20MHz BSS

A STA transmitting a 40MHz PPDU (either a 40MHz HT PPDU or a non-HT duplicate PPDU) shall sense CCA on the 20 MHz control channel and may sense CCA on the 20 MHz extension channel and combine the result with that from the control channel. NOTE 1—This allows far-away overlapping BSSs on the extension channel to be ignored or to inhibit 40 MHz transmissions as a matter of policy.

A STA transmitting a 20MHz PPDU shall sense CCA of the control channel only. Back-off and AIFS are derived from the corresponding CCA used for transmission.

NOTE 2—In addition a STA may obtain a CCA indication from extension channel or be able to receive and compare from both control and extension channels.

Copyright © 2006 IEEE. All rights reserved.
This is an unapproved IEEE Standards Draft, subject to change.

9.23.3 AP CCA sensing in 40/20Mhz BSS

The AP CCA sensing rule in 40/20MHz BSS is the same as STA CCA sensing rule.

9.23.4 NAV assertion in 40/20Mhz BSS

An HT STA shall assert NAV in accordance to duration of any frame received in control or 40MHz channel.

NOTE—A STA need not set its NAV in response to 20MHz frames received on the extension channel, even if it is capable of receiving those frames.

9.23.5 Frame transmission in 40/20Mhz BSS

An HT STA that has to transmit a response control frame it responds using same channel as the related frame has been received as described in this section.

In 40MHz mode, A 40/20 STA that receives a non-HT duplicate control frame shall respond with a non-HT duplicate PPDU.

In 40MHz mode, A 40/20 STA that cannot distinguish between the reception of non-HT PPDU and a non-HT duplicate PPDU that receives a non-HT control frame shall respond a non-HT duplicate PPDU.

A 40/20 capable STA in 20MHz mode shall transmit HT or non-HT control frames in the control channel.

9.23.6 Protection in 40/20MHz BSS

An HT STA transmitting a 40MHz PPDU shall ensure this transmission is protected if its AP indicates there are 20Mhz capable HT STAs and/or non-HT STAs associated in the same BSS. Operating mode = 11 or 10 in the Additional HT information element indicates this case.

If such protection is needed, it shall be implemented in the following way: non-HT control frames RTS/CTS, MPDU/Ack or A-MPDU/BlockAck, or CTS-to-self may be used for protection. MPDU/Ack shall only be used for protection of the transmission in a 20MHz wide channel. CF-End may be used to return the reserved but unused time of the TXOP.

An HT STA actually transmitting in 40MHz mode shall transmit an RTS or CTS-to-self in non-HT duplicate mode, as well using the non-HT duplicate mode when transmitting a CTS response.

A 40 MHz capable HT STA shall be able to receive duplicated frames at least on the control channel.

If the control frame does not contain any feedback request or response the following rule shall work relative to the actual channel width: 20 MHz packet uses 20 MHz non-HT ACK/BlockAck; 40 MHz packet uses duplicate non-HT ACK/BlockAck. See more details of the non-HT duplicated in the section 9.23.8.

The HT PPDU shall be used if the response contains link adaptation and explicit channel state feedback; the request channel width shall be the same as the intended data transmission width and the response channel width shall be the same as the request width.

9.23.7 CF-End in duplicated mode

Copyright © 2006 IEEE. All rights reserved.
This is an unapproved IEEE Standards Draft, subject to change.

An HT STA that uses a non-HT duplicate mode to establish protection of its TXOP shall send any terminal CF-End in non-HT duplicate mode.

9.23.8 ACK and BlockAck in non-HT duplicated mode

An HT STA shall behave in the following way if it uses non-HT duplicated mode for protection.

Non-aggregated 40MHz frames shall be acknowledged by ACK in non-HT duplicate mode.

A non-aggregated BlockAckReq shall be transmitted in non-HT duplicate mode if the STA is operating in a 40MHz mode.

A non-aggregated BlockAck shall be sent in non-HT duplicated mode if it is a response to a PPDU that is a 40MHz type.

9.23.9 STA switching from 40MHz to 20MHz in 40/20MHz BSS

Once associated a non-AP STA shall support the same channel width capabilities it declared in its association request. This capability is asserted in Supported Channel Width Set in the HT capabilities element.

When a STA is associated with an AP that declares a Supported Channel Width of 20/40 MHz, the STA may transmit frames in the 20Mhz wide control channel as well as the 40Mhz wide channel.

The AP may communicate its Recommended transmission Width Set either by transmitting the Additional HT Information Element (in beacons and probe response frames) or by transmitting the Set Recommended transmission Channel Width management action frame.

A 20/40 MHz capable non-AP STA in a 20/40MHz capable BSS may request its peer to send frames of 20 or 40 MHz width. The STA uses the Set Recommended transmission Channel Width management action frame for this purpose.

The reaction of both STA and AP to switch the channel width may be not immediate after receiving these frames. The STA that has transmitted one of these frames shall decide that the related request has been adopted when getting first HT frame of requested Recommended Transmission Width.

NOTE—STA should be aware that recommending a transmission width of 20MHz has no effect on the BSS behavior regarding protection of 40MHz sequence. If it is necessary to obtain this protection, the STA should re-associate with 20MHz-only capability.

10. Layer management

10.1 Overview of management model

10.2 Generic management primitives

10.3 MLME SAP interface

Copyright © 2006 IEEE. All rights reserved.
This is an unapproved IEEE Standards Draft, subject to change.

10.3.2 Scan

10.3.2.2 MLME-SCAN.confirm

10.3.2.2.2 Semantics of the service primitive

Insert the following entries into the table consisting BSSDescription in the subclause as shown:

Name	Type	Valid range	Description
HT Capabilities	As defined in frame format	As defined in frame format	The values from the HT Capabilities information element if such an element was present in the probe response or beacon, else null.
Additional HT	As defined in frame format	As defined in frame format	The values from the Additional HT information element if such an element was present in the probe response or beacon, else null.

10.3.6 Associate

10.3.6.1 MLME-ASSOCIATE.request

10.3.6.1.2 Semantics of the service primitive

Change the primitive parameters as shown:

```
MLME-ASSOCIATE.request(
        PeerSTAAddress,
        AssociateFailureTimeout,
        CapabilityInformation,
        ListenInterval,
        Supported Channels,
        RSN,
        QoSCapability,
        HT Capabilities
        )
```

Insert the following entry to the table in the subclause:

Name	Type	Valid range	Description
HT Capabilities	As defined in frame format	As defined in frame format	Specifies the parameters within the HT Capabilities information element that are

Copyright © 2006 IEEE. All rights reserved.
This is an unapproved IEEE Standards Draft, subject to change.

			supported by the MAC entity. The parameter shall be present only if the MIB attribute dot11HTCapabilityImplemented is true.

10.3.6.2 MLME-ASSOCIATE.confirm

10.3.6.2.2 Semantics of the service primitive

Change the primitive parameters as shown:

```
MLME-ASSOCIATE.confirm(
                        ResultCode,
                        CapabilityInformation,
                        AssociationID,
                        SupportedRates,
                        EDCAParameterSet,
                        HT Capabilities
                        )
```

Insert the following entry to the table in the subclause:

Name	Type	Valid range	Description
HT Capabilities	As defined in frame format	As defined in frame format	Specifies the parameters within the HT Capabilities information element that are to be used by the peer MAC entity (AP). The parameter shall be present only if the MIB attribute dot11HTCapabilityImplemented is true.

10.3.6.3 MLME-ASSOCIATE.indication

10.3.6.3.2 Semantics of the service primitive

Change the primitive parameters as shown:

```
MLME-ASSOCIATE.indication(
                        PeerSTAAddress,
                        CapabilityInformation,
                        ListenInterval,
```


Copyright © 2006 IEEE. All rights reserved.
This is an unapproved IEEE Standards Draft, subject to change.

SSID,
SupportedRates,
RSN,
QoSCapability,
HT Capabilities
)

Insert the following entry to the table in the subclause:

Name	Type	Valid range	Description
HT Capabilities	As defined in frame format	As defined in frame format	Specifies the parameters within the HT Capabilities information element that are supported by the peer MAC entity. The parameter may be present only if the MIB attribute dot11HTCapabilityImplemented is true.

10.3.6.4 MLME-ASSOCIATE.response

10.3.6.4.2 Semantics of the service primitive

10.3.7 Reassociate

10.3.7.1 MLME-REASSOCIATE.request

10.3.7.1.2 Semantics of the service primitive

Change the primitive parameters as shown:

MLME-REASSOCIATE.request(
NewAPAddress,
ReassociateFailureTimeout,
CapabilityInformation,
ListenInterval,
Supported Channels,
RSN,
QoSCapability,
HT Capabilities

Copyright © 2006 IEEE. All rights reserved.
This is an unapproved IEEE Standards Draft, subject to change.

)

Insert the following entry to the table in the subclause:

Name	Type	Valid range	Description
HT Capabilities	As defined in frame format	As defined in frame format	Specifies the parameters within the HT Capabilities information element that are supported by the MAC entity. The parameter shall be present only if the MIB attribute dot11HTCapabilityImplemented is true.

10.3.7.2 MLME-REASSOCIATE.confirm

10.3.7.2.2 Semantics of the service primitive

Change the primitive parameters as shown:

MLME-REASSOCIATE.confirm(
ResultCode,
CapabilityInformation,
AssociationID,
SupportedRates,
EDCAParameterSet,
HT Capabilities
)

Insert the following entry to the table in the subclause:

Name	Type	Valid range	Description
HT Capabilities	As defined in frame format	As defined in frame format	Specifies the parameters within the HT Capabilities information element that are to be used by the peer MAC entity (AP). The parameter shall be present only if the MIB attribute dot11HTCapabilityImplemented is true.

10.3.7.3 MLME-REASSOCIATE.indication

10.3.7.3.2 Semantics of the service primitive

Change the primitive parameters as shown:

MLME-REASSOCIATE.indication(

Copyright © 2006 IEEE. All rights reserved.
This is an unapproved IEEE Standards Draft, subject to change.

PeerSTAAddress,
CurrentAPAddress,
CapabilityInformation,
ListenInterval,
SSID,
SupportedRates,
RSN,
QoSCapability,
HT Capabilities
)

Insert the following entry to the table in the subclause:

Name	Type	Valid range	Description
HT Capabilities	As defined in frame format	As defined in frame format	Specifies the parameters within the HT Capabilities information element that are supported by the peer MAC entity. The parameter may be present only if the MIB attribute dot11HTCapabilityImplemented is true.

10.3.7.4 MLME-REASSOCIATE.response

10.3.7.4.2 Semantics of the service primitive

10.3.10 Start

10.3.10.1 MLME-START.request

10.3.10.1.2 Semantics of the service primitive

Change the primitive parameters as shown:

MLME-START.request(
SSID,
BSSType,
BeaconPeriod,
DTIMPeriod,

Copyright © 2006 IEEE. All rights reserved.
This is an unapproved IEEE Standards Draft, subject to change.

CF parameter set,

PHY parameter set,

IBSS parameter set,

ProbeDelay,

CapabilityInformation,

BSSBasicRateSet,

OperationalRateSet,

Country,

IBSS DFS Recovery Interval,

EDCAParameterSet,

HT Capabilities,

Additional HT

)

Insert the following entry to the table in the subclause:

Name	Type	Valid range	Description
HT Capabilities	As defined in frame format	As defined in frame format	The HT capabilities to be advertised for the BSS. The parameter shall be present only if the MIB attribute dot11HTCapabilityImplemented is true.
Additional HT	As defined in frame format	As defined in frame format	Present only if BSSType = INFRASTRUCTURE and if the MIB attribute dot11HTCapabilityImplemented is true. The additional HT capabilities to be advertised for the BSS.

10.3.15 Channel switch

10.3.15.1 MLME-CHANNELSWITCH.request

10.3.15.1.2 Semantics of the service primitive

Change the parameter list as follows:

The primitive parameters are as follows:

MLME-CHANNELSWITCH.request(

Mode,

Copyright © 2006 IEEE. All rights reserved.
This is an unapproved IEEE Standards Draft, subject to change.

Channel Number,
New Extension Channel Offset,
Channel Switch Count
)

10.3.15.1.3 When generated

Change the subclause as follows:

This primitive is generated by the SME to schedule a channel switch and announce this switch to peer entities in the BSS.

Name	Type	Valid range	Description
Mode	Integer	0, 1	Channel switch mode, as defined for the Channel Switch Announcement element.
Channel Number	Integer	As defined in 17.3.8.3.3	Specifies the new channel number.
New Extension Channel Offset	Integer	0, 1, 3	Specifies the position of extension channel in relation to the control channel. The 40/20 capable BSS/IBSS shall insert this parameter.
Channel Switch Count	Integer	0–255	Specifies the number of TBTTs until the channel switch event, as described for the Channel Switch Announcement element.

The New Extension Channel Offset parameter may be present for the HT Stations.

10.3.15.3 MLME-CHANNELSWITCH.indication

10.3.15.3.1 Function

Change the parameter list in 10.3.15.3.1 and following table as follows:

MLME-CHANNELSWITCH.indication(
Peer MAC Address,
Mode,
Channel Number,
New Extension Channel Offset,
Channel Switch Count
)

Name	**Type**	**Valid range**	**Description**

Copyright © 2006 IEEE. All rights reserved.
This is an unapproved IEEE Standards Draft, subject to change.

Peer MAC Address	MACAddress	Any valid individual MAC Address	The address of the peer MAC entity from which the Measurement Report frame was received.
Mode	Integer	0, 1	Channel switch mode, as defined for the Channel Switch Announcement element.
Channel Number	Integer	As defined in 17.3.8.3.3	Specifies the new channel number.
New Extension Channel Offset	Integer	0, 1, 3	Specifies the position of extension channel in relation to the control channel. The 40/20 capable BSS/IBSS shall insert this parameter.
Channel Switch Count	Integer	0–255	Specifies the number of TBTTs until the channel switch event, as described for the Channel Switch Announcement element.

10.3.15.4 MLME-CHANNELSWITCH.response

10.3.15.4.2 Semantics of the service primitive

Change the parameter list in 10.3.15.4.2 as follows:

```
MLME-CHANNELSWITCH.response(
                                        Mode,
                                        Channel Number,
                                        New Extension Channel Offset,
                                        Channel Switch Count
                                        )
```

Change the table in 10.3.15.4.2 as follows:

Name	Type	Valid range	Description
Mode	Integer	0, 1	Channel switch mode, as defined for the Channel Switch Announcement element.

Copyright © 2006 IEEE. All rights reserved.
This is an unapproved IEEE Standards Draft, subject to change.

Channel Number	Integer	As defined in 17.3.8.3.3	Specifies the new channel number.
New Extension Channel Offset	Integer	0, 1, 3	Specifies the position of extension channel in relation to the control channel. The 40/20 capable BSS/IBSS shall insert this parameter.
Channel Switch Count	Integer	0–255	Specifies the number of TBTTs until the channel switch event, as described for the Channel Switch Announcement element.

10.4 PLME SAP interface

10.4.3 PLME-CHARACTERISTICS.confirm

10.4.3.2 Semantics of the service primitive

Change the primitive parameters as shown:

```
PLME-CHARACTERISTICS.confirm(
                    aSlotTime,
                    aSIFSTime,
                    aCCATime,
                    aRxTxTurnaroundTime,
                    aTxPLCPDelay,
                    aRxPLCPDelay,
                    aRxTxSwitchTime,
                    aTxRampOnTime,
                    aTxRampOffTime,
                    aTxRFDelay,
                    aRxRFDelay,
                    aAirPropagationTime,
                    aMACProcessingDelay,
                    aPreambleLength,
```


Copyright © 2006 IEEE. All rights reserved.
This is an unapproved IEEE Standards Draft, subject to change.

aSTFOneLength,

aSTFTwoLength,

aLTFOneLength,

aLTFTwoLength,

aPLCPHeaderLength,

aPLCPHeaderTwoLength,

aMPDUDurationFactor,

~~aMPDUMaxLength,~~

aPSDUMaxLength,

aCWmin,

aCWmax

)

Change the following entries after aPreambleLength in the table as shown:

Name	Type	Desciption
aSTFOneLength	integer	The Short Training Field One Length (in microseconds)
aSTFTwoLength	integer	The Short Training Field Two Length (in microseconds)
aLTFOneLength	integer	The Long Training Field One Length (in microseconds)
aLTFTwoLength	integer	The Long Training Field Two Length (in microseconds)
aPLCPHeader-Length	integer	The current PHY's PLCP header length (in microseconds). If the actual value of the length of the modulated header is not an integral number of microseconds, the value is rounded up to the next higher value.
aPLCPTHeaderTwo-Length	integer	The PLCP header length (in microseconds) if there is need for more than one PLCP header
aMPDUDuration-Factor	integer	The overhead added by the PHY to the MPDU as it is transmitted through the WM expressed as a scaling factor applied to the number of bits in the MPDU. The value of aMPDUDurationFactor is generated by the following equation: Truncate[((PPDUbits/PSDUbits)–1) × 10^9)]. The total time to transmit a PPDU over the air is generated by the following equation rounded up to the next integer µs: aPreambleLength + aPLCPHeaderLength + (((aMPDUDurationFactor × 8 × PSDUoctets) / 10^9) + (8 × PSDUoctets)) / data rate where data rate is in Mbit/s. The total time (in µs) to the beginning of any octet in a PPDU from the first symbol of the preamble can be calculated using the duration factor in the following equation: Truncate[aPreambleLength + aPLCPHeaderLength + (((aMPDUDurationFactor × 8 × N) / 10^9) + (8 × N)) / data rate] + 1, where data rate is in Mbit/s and where *N* counts the number of octets in the PPDU prior to the desired octet, but does not count the number of octets in the preamble PLCP header.

Copyright © 2006 IEEE. All rights reserved.
This is an unapproved IEEE Standards Draft, subject to change.

~~aMPDUMax-Length~~ aPSDUMax-Length	integer	The maximum number of octets in ~~an MPDU~~a PSDU that can be conveyed by a PLCP protocol data unit (PPDU).
aCWmin	integer	The minimum size of the CW, in units of aSlotTime.
aCWmax	integer	The maximum size of the CW, in units of aSlotTime.

Add at end of the section

The parameters aSTFOneLength, aSTFTwoLength, aLTFOneLength, aLTFTwoLength, aPLCPHeaderTwoLength are not used by all PHYs defined within this standard.

11. MLME

11.1 Synchronization

11.1.1 Basic Approach

11.1.2 Maintaining Synchronization

11.1.2.1 Beacon generation in infrastructure networks

Insert the following subclause

11.1.2.1.1 Secondary Beacon Transmission

The AP may transmit a secondary beacon and MC/BC traffic using a Basic STBC MCS. The secondary beacon bit shall be set in this beacon, so that STAs know that the TBTT for this beacon has an offset of half a beacon period. The TSF timestamp of the secondary beacon shall be the actual timestamp.

Any other fields inside the beacon shall be identical to the primary beacon. MC/BC traffic transmitted after the secondary beacon shall be identical to the MC/BC traffic transmitted after the primary beacon.

11.1.3 Acquiring synchronization, scanning

11.1.3.1 Passive scanning

Copyright © 2006 IEEE. All rights reserved.
This is an unapproved IEEE Standards Draft, subject to change.

11.1.3.2 Active scanning

11.1.3.2.1 Sending a probe response

11.1.3.2.2 Active Scanning Procedure

Insert the following text at the end of 11.1.3.2.2

The Probe request contains the HT Capabilities element. This enables a STA transmitting a probe response to ensure that it selects an MCS supported by the intended receiver.

The AP transmits a probe response using an MCS from the supported MCS set received in the HT capabilities element of the corresponding Probe request.

11.2 Power management

11.2.1 Power management in an infrastructure network

11.2.1.1 Receive operation for non-AP QSTAs using APSD

11.2.1.3 TIM types

Change the first paragraph of 11.2.1.3 as follows:

Two different TIM types are distinguished: TIM and DTIM. After a DTIM, the AP shall send out the buffered broadcast/multicast MSDUs using normal frame transmission rules, before transmitting any unicast frames. When the AP transmits secondary beacons, all buffered broadcast/multicast MSDUs which were sent following the immediately-preceding non-secondary DTIM shall be sent again, by STBC Basic MCS, following the transmission of the secondary DTIM beacon.

11.2.1.5 AP operation during the CP

Change item f) in 11.2.1.5 as follows:

f) Immediately after every DTIM, the AP shall transmit all buffered broadcast/multicast MSDUs. The More Data field of each broadcast/multicast frame shall be set to indicate the presence of further buffered broadcast/multicast MSDUs. If the AP is unable to transmit all of the buffered broadcast/ multicast MSDUs before the primary or secondary TBTT following the DTIM, the AP shall indicate that it will continue to deliver the broadcast/multicast MSDUs by setting the bit for AID 0 (zero) in the bit map control field of the TIM element of every Beacon frame, until all buffered broadcast/multicast frames have been transmitted. When the AP transmits secondary beacons, the AP shall ensure that all buffered broadcast/multicast frames

Copyright © 2006 IEEE. All rights reserved.
This is an unapproved IEEE Standards Draft, subject to change.

that are transmitted following primary DTIM or TIM beacons shall be transmitted again following a secondary DTIM or TIM in a manner similar to that prescribed for the primary transmissions, except that they are transmitted using the STBC Basic MCS. It may be the case that a complete set of buffered broadcast/multicast frames is sent over a period of time during which primary and secondary transmissions are interleaved, but the transition from primary broadcast/multicast transmissions to secondary broadcast/multicast transmissions shall always be preceded by the transmission of a secondary DTIM beacon or secondary TIM beacon and the transition from secondary broadcast/multicast transmissions to primary broadcast/multicast transmissions shall always be preceded by the transmission of a primary DTIM beacon or primary TIM beacon.

11.2.1.6 AP operation during the CFP

Change item e) of 11.2.1.6 as follows:

e) Immediately after every DTIM (Beacon frame with DTIM Count field of the TIM element equal to zero), the AP shall transmit all buffered broadcast and multicast frames. The More Data field shall be set to indicate the presence of further buffered broadcast/multicast MSDUs. If the AP is unable to transmit all of the buffered broadcast/multicast MSDUs before the primary or secondary TBTT following the DTIM, the AP shall indicate that it will continue to deliver the broadcast/multicast MSDUs by setting the bit for AID 0 (zero) in the bit map control field of the TIM element of every Beacon frame, until all buffered broadcast/multicast frames have been transmitted. When the AP transmits secondary beacons, the AP shall ensure that all buffered broadcast/multicast frames that are transmitted following primary DTIM or TIM beacons shall be transmitted again following a secondary DTIM or TIM in a manner similar to that prescribed for the primary transmissions, except that they are transmitted using the STBC Basic MCS. It may be the case that a complete set of buffered broadcast/multicast frames is sent over a period of time during which primary and secondary transmissions are interleaved, but the transition from primary broadcast/multicast transmissions to secondary broadcast/multicast transmissions shall always be preceded by the transmission of a secondary DTIM beacon or secondary TIM beacon and the transition from secondary broadcast/multicast transmissions to primary broadcast/multicast transmissions shall always be preceded by the transmission of a primary DTIM beacon or primary TIM beacon.

11.2.1.7 STA operation during the CP

Change item e) of 11.2.1.7 as follows:

e) When ReceiveDTIMs is true, the STA shall wake up early enough to be able to receive at least every primary (non-STBC) DTIM or at least every secondary DTIM. A STA receiving broadcast/multicast MSDUs shall elect to receive at least all primary (non-STBC) broadcast/multicast transmissions or at least all secondary broadcast/multicast transmissions, and shall remain awake until the More Data field of the appropriate type (primary or secondary) of broadcast/multicast MSDU~~s~~ indicates there are no further buffered broadcast/multicast MSDUs of that type, or until a TIM is received indicating there are no more buffered broadcast/multicast MSDUs of that type. If a non- AP QSTA receives a QoS +CF-Ack frame from its QAP with the More Data bit set to 1, then the QSTA shall operate exactly as if it received a TIM with its AID bit set. If a non-AP QSTA has set the More Data Ack subfield in QoS Capability information element to 1, then if it receives an ACK frame from its QAP with the More Data bit set to 1, the QSTA shall operate

Copyright © 2006 IEEE. All rights reserved.
This is an unapproved IEEE Standards Draft, subject to change.

exactly as if it received a TIM with its AID bit set. For example, a QSTA that is using the PS-Poll delivery method shall issue a PS-Poll frame to retrieve a buffered frame.

11.2.1.8 STA operation during the CFP

Change item b) of 11.2.1.8 as follows:

b) To receive broadcast/multicast MSDUs, the STA shall wake up early enough to be able to receive at least every primary DTIM or at least every secondary DTIM that may be sent during the CFP. A STA receiving broadcast/multicast MSDUs shall elect to receive at least all primary (non-STBC) broadcast/multicast transmissions or at least all secondary broadcast/multicast transmissions, and shall remain awake until the More Data field of the appropriate type (primary or secondary) of broadcast /multicast MSDU~~s~~ indicates there are no further buffered broadcast/multicast MSDUs of that type, or until a TIM is received indicating there are no more broadcast/multicast MSDUs of that type buffered.

11.2.2 Power management in an IBSS

Insert the following subclause

11.2.3 MIMO Power Save Features

11.2.3.1 MIMO Power Save support

A MIMO device consumes power on all active Rx chains, even though they are not necessarily required for the actual frame exchange.

The MIMO Power Save feature allows a STA to spend most of its time with only one active Rx chain. In the case of dynamic MIMO power save mode, it enabled its multiple Rx chains when it receives the start of a sequence directed to it. Such a sequence shall start with a single-spatial stream unicast frame addressed to it. Non-HT RTS/CTS sequence may be used for this purpose. The receiver switches to the multiple Rx chain mode when it gets the RTS directed to it and switches back immediately when the TxOP ends.

The Receiver cannot distinguish between RTS/CTS sequence that precedes true MIMO transmission and any other RTS/CTS and therefore always enables its multiple Rx chains when it sees an RTS directed to it.

An HT STA may use the MIMO Power save management action frame to inform its peers of its MIMO Power Save state. A non-AP STA may also use MIMO Power Save bits in the HT capabilities element of its association request to achieve the same purpose. The latter allows the STA to use only a single Rx chain immediately after association.

There may be a delay at a STA receiving the action frame to respond to any change. An HT STA that transmits this frame should wait to receive the related RTS for transitions into dynamic MIMO power save mode before locally operating its MIMO power save mode.

11.2.3.2 Reduced MIMO capability

Copyright © 2006 IEEE. All rights reserved.
This is an unapproved IEEE Standards Draft, subject to change.

The STA uses the HT capabilities IE to signal whether it is MIMO capable when gets associated.

The STA enables its MIMO capabilities accordingly the Max number of Rx spatial channels of the HT capability element it sends in its Association Request when it associates.

The STA may dynamically disable/enable its MIMO capabilities and inform its peers using the Reduce MIMO Capability management action frame.

An HT STA shall not send any MIMO PPDUs to a peer that is in static MIMO power save mode, as determined by receiving this management action frame.

There may be a delay at a STA receiving the action frame to respond to any change. A STA that transmits this frame should wait a beacon period for transitions into static MIMO power save mode before locally operating its MIMO power save mode.

11.3 Authentication and deauthentication

11.4 TS operation

11.4.1 Introduction

11.4.2 TSPEC construction

11.4.3 TS lifecycle

11.4.4 TS Setup

11.4.4A Management of Scheduled PSMP

11.4.4A.1 Introduction (Informative)

Scheduled PSMP is created by AP in response to first TSPEC request. The main purpose of the TSPEC is to reserve resources within the AP and modify the AP's scheduling behavior. The TSPEC contains two groups of parameters: PSMP scheduling and PSMP reservation. The scheduling parameters are used by AP to schedule a suitable Service Interval. The reservation parameters are used by the AP to reserve time in the ULT and DLT.

PSMP scheduling parameters
Minimum Service Interval
Maximum Service Interval
Inactivity Interval

Copyright © 2006 IEEE. All rights reserved.
This is an unapproved IEEE Standards Draft, subject to change.

Suspension Interval
Service Start time
Schedule subfield

Table n54 – TSPEC contained PSMP scheduling parameters

PSMP reservation parameters
Nominal MSDU size
Maximum MSDU size
Minimum data rate
Mean Data rate
Peak Data rate
Burst Size
Delay Bound
Minimum PHY rate
Surplus Bandwidth Allowance
Medium Time
TS Info subfields:
Traffic Type
TSID
Direction
Access Policy
Aggregation
APSD
User priority
Ack Policy

Table n55 – TSPEC contained PSMP reservation parameters

The Service Start time and Service Interval specifies the PSMP schedule in the response's Scheduling Element. All other parameters result in a reservation for the ULT and DLT within the scheduled PSMP sequence.

It is always the responsibility of the non-AP STA to initiate the creation of PSMP regardless of the TSPEC direction.

The lifecycle rules of PSMP are the rules of last TSPEC associated with this particular PSMP.

Once created, the PSMP can be extended by another TSPEC. The same or other STAs can issue more TSPEC requests to the already existent PSMP. Parameters of TSPEC already associated with PSMP can be changed. However the Service Interval cannot be changed and establishing Start Time of the new STA cannot change the Start Time of existing STAs

11.4.4A.2 Join PSMP

Copyright © 2006 IEEE. All rights reserved.
This is an unapproved IEEE Standards Draft, subject to change.

Under PSMP, the TSPEC Aggregation subfield shall be 0 and the APSD subfield shall be 1.

Unidirectional as well bidirectional TSPECs may be used for PSMP resources reservation. The bidirectional TSPEC may be used if the reservation parameters of the both directions are equal (voice or videoconferencing for example). If a STA reserves a separate TSPEC for each direction the TSID for both should be the same.

An HT STA joins PSMP outside the PSMP mechanism using any appropriate channel access mechanism. The non-AP STA SME decides that a PSMP needs to be joined. How it does this, and how it selects the related TSPEC parameters, is beyond the scope of this specification. The SME generates an MLMEADDTS.request containing a TSPEC. A TSPEC may also be generated autonomously by the MAC without any initiation by the SME. The non-AP STA MAC transmits the TSPEC in an ADDTS request frame to the AP and waits for response.

The AP decides whether to admit the TSPEC as specified, or refuse the TSPEC, or not admit but suggest an alternative TSPEC and transmits an ADDTS response frame containing this TSPEC and status. The encoding of additional ResultCode values for the Status Code field are defined in Table n26.6. If the ResultCode is "SUCCESS", the TS enters into an active state. Otherwise, the whole process may be repeated using the same TSID and Direction and a modified TSPEC until the non-AP STA decides that the granted TXOP is adequate or inadequate and cannot be improved. The AP may attach the requesting STA to the Start Service Interval of an already established service period, or it may create a new service period for this STA. The Service Interval it selects shall be in multiples of the Service Interval Granularity.

Table n56 – Encoding of Result Code to Status Code Field Value

Result Code	Status Code
Success	0
Invalid Parameters	38
Rejected with Suggested Changes	39
Rejected for Delay Period	47

The STA may resubmit a TSPEC request with suggested changes if the ResultCode is “Rejected_with_suggested_changes”. The suggested changes are included in the response’s Schedule element. The suggestion may be related to scheduling as well to reservation parameters. The suggested scheduling parameters may not be negotiated – i.e. the AP is unlikely to accept any request that does not use the specific suggestions for these parameters.

The STA may add another TSPEC under TBD conditions. In this case the AP shall use the Start Service Interval of already established service The requested Service Intervals of different TSPECs shall be multiples of the Service Interval Granularity (Figure n39).

11.4.4B Management of Unscheduled PSMP

Under U-PSMP operation, a STA does not need to use TSPEC for resources reservation. Each of the two U-APSD methods may be used to make a particular AC trigger-enabled and/or delivery-enabled. Data frames for all delivery enabled ACs may be transmitted to the STA in the same SP. The ULT shall only used by the STA for acknowledgement. This ACK/MTBA shall be transmitted at a basic rate/MCS (thus allowing AP precise reservation of the ULT per STA).

Copyright © 2006 IEEE. All rights reserved.
This is an unapproved IEEE Standards Draft, subject to change.

11.5 Block Ack operation

11.5.1

Insert the following subclause

11.5.2 Multi-TID Block Ack

11.5.2.1 Multiple TID Block Ack management under scheduled PSMP

A Block Ack agreement shall be set up after the related TSPEC has been established. The Multiple TID Block Ack scheme and frame formats are used under a TSPEC with PSMP access policy. A AP as an Originator of DLT and STA as an Originator of ULT shall establish a BlockAck agreement for each such TSID. The related ADDBA exchange is performed outside the PSMP mechanism using any applicable channel access mechanism.. No synchronization is required between Originators to order these ADDBA transmissions. The BlockAck setup procedure is the same as defined in the .11e. During the BlockAck setup procedure, the originator uses the TSID already established.

11.5.2.2 Multiple TID Block Ack management under unscheduled PSMP

An HT AP may choose to transmit data under unscheduled APSD operation during the DLT of a PSMP sequence. A BlockAck agreement shall be established before sending any data under MTBA/PSMP ack policy during unscheduled PSMP.

11.6 Higher layer timer synchronization

11.7 DLS operation

11.8 TPC

11.9 DFS

11.9.4 Selecting and advertising a new channel

Insert the following subclause

11.9.5 Channel Selection Methods for 20/40 MHz Operation

11.9.5.1 Introduction

Copyright © 2006 IEEE. All rights reserved.
This is an unapproved IEEE Standards Draft, subject to change.

The best coexistence is achieved when all BSSs occupy separate channels and when non-HT and HT devices do not overlap.

On detecting the arrival of a co-channel non-HT BSS on the extension channel, the AP may need to either adjust its recommended transmission channel widths to avoid the non-HT BSS, or select a new set of channels.

11.9.5.2 Rules

The HT AP should either be configured manually or configure itself automatically as described in this section.

The HT AP should scan its environment before selecting channel parameters. AP should use mixed or non-HT mode PPDU types for any active scanning.

If the selected channel parameters overlap an existing HT BSS, then they should use the same control channel and extension channel offset. The AP should reselect new channel parameters if an HT BSS that does not have the same control channel, extension channel offset starts operating on an overlapped channel.

Given a choice of 40MHz channel selections recommended transmission by the previous rules, the AP should prefer a channel selection that aligns its 40MHz channel with the starting (i.e. lowest frequency) pair of adjacent 20MHz channels within any band or sub-band plus zero or more times 40MHz.

NOTE—The purpose of this recommendation is to avoid introducing 20MHz "holes" between adjacent operating 40MHz BSS, thus making them unavailable for 40MHz operation.

11.9.5.3 Channel Management at the AP

An HT AP shall receive the beacons of other HT BSSs on its channel when it first powers up.

It may receive these beacons later as part of background scanning.

HT BSSs shall only overlap HT BSSs with the same control channel and extension channel location. [5]

AP may switch the BSS capability between 40/20MHz and 20MHz by changing the value of the Supported Channel Width Set field of the HT capability information element in the Beacon. The STA shall de-associate/associate or re-associate to accommodate the new capability. In any transition of channel width, the AP should take in consideration any STAs that asleep.

11.10 Radio Measurement Procedures

11.11 Usage of the Neighbor Report

11.12 Link Measurement

[5] This, together with the requirement for the same basic width set ensures that any pure-mode control frames sent in one BSS can be received in any overlapping HT BSS.

Copyright © 2006 IEEE. All rights reserved.
This is an unapproved IEEE Standards Draft, subject to change.

11.13 Measurement pilot frame generation and usage

Insert the following subclause

11.14 A-MPDU operation

11.14.1 PSDU Length Limit Rules

An HT STA shall declare the maximum PSDU length that it can receive using the Maximum Rx PSDU Factor capability field. The STA may limit the PSDU length during association using the Maximum Rx A-MPDU Factor field of the HT information element. The STA shall receive PSDUs of length less than the indicated limit. When it receives a PSDU of length greater than the limit, it shall receive the first 2^(13 + Maximum Rx A-MPDU Factor **)** bytes and discard any remainder.

An HT STA shall form an aggregate for transmission such that all the MPDUs within the aggregate that are intended to be received by a particular STA shall be within the first 2^(13 + Maximum Rx A-MPDU Factor **)** bytes of the PSDU, using the limit declared by that STA.

11.14.2 MPDU density

An HT STA shall not allow transmission of more than one MPDU start within the time limit described in the MPDU maximum density field. The limitation shall be measured at the PHY_SAP; the number of bytes between the start of two consecutive MPDUs in A-MPDU shall be equal or greater than MPDU-density*PHY-bit-rate/8.

Insert the following subclause

11.15 40/20 MHz Operation

11.15.1 Basic functionality in BSS 40/20Mhz mode

An HT AP declares its capabilities in the HT capability element contained in each beacon. Protection requirements for HT frames are part of the HT additional information element transmitted by the AP..

Long NAV protection may be used to protect TxOP of several frames.

40/20MHz capable STAs, 20MHz capable STAs and non-HT STAs may be associated in the 40/20Mhz capable BSS.

An HT non-AP STA declares its own capabilities by the Supported Channel Width Set in the HT capability element issued with association request.

An HT STA may switch between 40/20MHz capable and 20MHz capable operation by disassociation and (re-)association.

Copyright © 2006 IEEE. All rights reserved.
This is an unapproved IEEE Standards Draft, subject to change.

A 40/20MHz capable HT STA transmits and receives HT frames in either the 40MHz channel or the 20MHz control channel. The Set recommended transmission channel width action frame may be used by a non-AP HT STA to choose an actual channel width. Transmission of this frame by a non-AP STA requests that the AP send frames in indicated width. This frame shall be sent in the control channel using non-HT mode The STA may use BSSBasicRateSet OFDM non-HT frames for protections of 20 MHz HT frames in the control channel unless the Use Protection field of the ERP information element is set. If set, DSSS/CCK frames shall be used for protection.

A 20MHz capable HT STA shall transmit and receive HT frames in the 20MHz control channel and may use BSSBasicRateSet OFDM non-HT frames for protection unless the Use Protection field of the ERP information element is set. If set, DSSS/CCK frames shall be used for protection.

The 40/20MHz capable AP controls the type of protection used in order to avoid collision between 20MHz capable STAs and other 40/20 capable STAs working in 40MHz channel as described in section 9.23.1.

NOTE—These STAs can collide because the 20MHz capable STAs cannot respect virtual carrier of the 40MHz capable STAs.

Table n57 – AP Mode Definitions

AP Mode	Beacon Transmission	non-AP STA operation	Protection Required at non-AP STA
5.2GHz band BSS 40/20Mhz	Non-HT OFDM	40MHz	Duplicated non-HT OFDM
5.2GHz band BSS 40/20Mhz	Non-HT OFDM	20MHz HT	Non-HT OFDM
5.2GHz band BSS 20Mhz	Non-HT OFDM	20MHz HT	Non-HT OFDM
2.4GHz band BSS 40/20Mhz	DSSS/CCK or non-HT OFDM. See note 1.	40MHz	Duplicated non-HT OFDM
2.4MHz band BSS 40/20Mhz	DSSS/CCK or non-HT OFDM. See note 1.	20MHz HT	DSSS/CCK or non-HT OFDM. See note 2.
2.4GHz band BSS 20Mhz	DSSS/CCK or non-HT OFDM. See note 1.	20MHz HT	DSSS/CCK or non-HT OFDM. See note 2.

NOTE 1— As determined by the BSSBasicRateSet

NOTE 2— If the Use_Protection field of the ERP information element is set, DSSS/CCK frames are used for protection, otherwise OFDM frames are used as determined by the BSSBasicRateSet.

11.15.2 Operating Modes (Informative)

The operating modes of an HT BSS are defined in the following table. These modes indicate the kind of protection used for HT transmissions. Both AP and non-AP STA use the same protection mechanism

Copyright © 2006 IEEE. All rights reserved.
This is an unapproved IEEE Standards Draft, subject to change.

(RTS/CTS and CF-End). No AP managed protection mechanisms are defined. Support of the AP centric PCO mechanism is optional.

Table n58 – Operating Modes according to Band and BSS Capability

Band	BSS capability	Definition of Mode
5.2 GHz	40/20MHz	This is the primary operational HT mode. The BSS occupies two adjacent 20MHz channels. 40MHz, 20MHz HT and non-HT devices may be associated in the same BSS. 20MHz devices are only be associated on the control channel. Other (overlapping) BSSs may sit in the extension channel. Beacons are sent in non-HT mode in the control channel. RTS/CTS, MPDU/Ack, OR self CTS may be used to establish Long NAV protection of TxOP.

Copyright © 2006 IEEE. All rights reserved.
This is an unapproved IEEE Standards Draft, subject to change.

Band	BSS capability	Definition of Mode
	20MHz	The BSS occupies a 20MHz channel. A 40/20MHz HT STA operates using 20MHz channel width. 20MHz HT and non-HT devices may be associated in the same BSS. The beacon is sent using a non-HT mode. RTS/CTS, MPDU/Ack or CTS-to-self may be used to establish Long NAV protection of TxOP.
	PCO	Phased Coexistence Operation (PCO) is an optional BSS mode with alternating 20 MHz phase and 40 MHz phases controlled by PCO AP. PCO capable AP advertises its BSS as 40/20 MHz capable and PCO capable. The PCO capable AP also advertises its PCO operation status. A PCO capable STA associate with BSS as PCO STA when PCO active bit in Additional HT information element is set to 1 and when its transition time meets the time indicated by PCO AP. If the previous condition is not met, then PCO capable STA regards the BSS as 40/20 MHz BSS and may associate with the BSS as 40/20 MHz STA. A non PCO capable STA regards the BSS as 40/20 MHz BSS and may associate with the BSS as in normal.
2.4 GHz	40/20MHz	This is the primary operational HT mode. The BSS occupies two adjacent 20MHz channels. 40MHz, 20MHz HT and non-HT devices may be associated in the same BSS. 20MHz devices are only be associated on the control channel. Other (overlapping) BSSs may sit in the extension channel. Beacons are sent in non-HT mode in the control channel. RTS/CTS, MPDU/Ack or CTS-to-self may be used to establish Long NAV protection of TxOP. This protection may be required, depending on the setting of the operating mode bits of the HT additional information element. This protection is established using either duplicate non-HT format or DSSS/CCK format.
	20MHz	Support of CCK, OFDM and HT frames

Copyright © 2006 IEEE. All rights reserved.
This is an unapproved IEEE Standards Draft, subject to change.

Band	BSS capability	Definition of Mode
	PCO	Phased Coexistence Operation (PCO) is an optional BSS mode with alternating 20 MHz phase and 40 MHz phases controlled by PCO AP. PCO capable AP advertises its BSS as 40/20 MHz capable and PCO capable. The PCO capable AP also advertises its PCO operation status. A PCO capable STA associate with BSS as PCO STA when PCO active bit in Additional HT information element is set to 1 and when its transition time meets the time indicated by PCO AP. If the previous condition is not met, then PCO capable STA regards the BSS as 40/20 MHz BSS and may associate with the BSS as 40/20 MHz STA. A non PCO capable STA regards the BSS as 40/20 MHz BSS and may associate with the BSS as in normal.

11.15.3 STA Capabilities (Informative)

This section summarizes the operation of a STA operating according to this specification based on the combination of BSS and STA width capabilities.

Table n59 – STA operation according to BSS Capability and STA width capability

BSS capability	STA Capability	Rx 40MHz	Rx 20Mhz HT control	Rx Non-HT in control	Rx non-HT dupl.	Tx 40 MHz	Tx 20 MHz HT	Tx non-HT in control	Tx non-HT dupl	Comments
40/20 MHz	40/20 MHz	Yes	Yes	Yes	Cntrl chan only	Yes	Yes	Yes	Yes	STA may transmit and receive in 40MHz as well in 20MHz control channel.
40/20 MHz	20 MHz	No	Yes	Yes	Cntrl chan only	No	Yes	Yes	No	STA is 20Mhz capable and is able to transmit and receive 20MHz HT and non-HT frames.
20 MHz	20 MHz	NA	Yes	Yes	NA	NA	Yes	Yes	NA	20Mhz HT Tx Mode, all AP modes supported
PCO	PCO	Yes	Yes	Yes	Cntrl chan only	Yes (40 MHz Phase only)	Yes (20 MHz Phase only)	Yes (20 MHz Phase only)	Yes (40 MHz Phase only. Except CF-End)	Transition by PCO STA respects 40 MHz phase and 20 MHz phase indicated by PCO AP. PCO STA uses 40 MHz HT PPDU to send CF-End.
PCO	40/20 MHz	Yes	Yes	Yes	Cntrl chan only	Yes	Yes	Yes	Yes	STA may transmit and receive in 40 MHz as well as in 20 MHz control channel.
PCO	20 MHz	No	Yes	Yes	Cntrl chan only	No	Yes	Yes	No	STA is 20 MHz capable and is able to transmit and receive 20 MHz HT and non-HT frames.

Copyright © 2006 IEEE. All rights reserved.
This is an unapproved IEEE Standards Draft, subject to change.

Insert the following subclause

11.16 Phased Coexistence Operation

Phased Coexistence Operation (PCO) is an optional coexistence mechanism in which a BSS operates in alternating 20 MHz and 40 MHz phases under the control of a PCO AP. The PCO AP reserves the 20 MHz control channel and the 20 MHz extension channel in turn to start the 40 MHz phase and resets the NAV in the 20 MHz channels in the opposite order to start the 20 MHz phase. The process is illustrated in Figure n48. Due to the protection of the 40 MHz period in both channels, it is tolerant of overlapping BSSs on both 20 MHz halves of a 40 MHz channel.

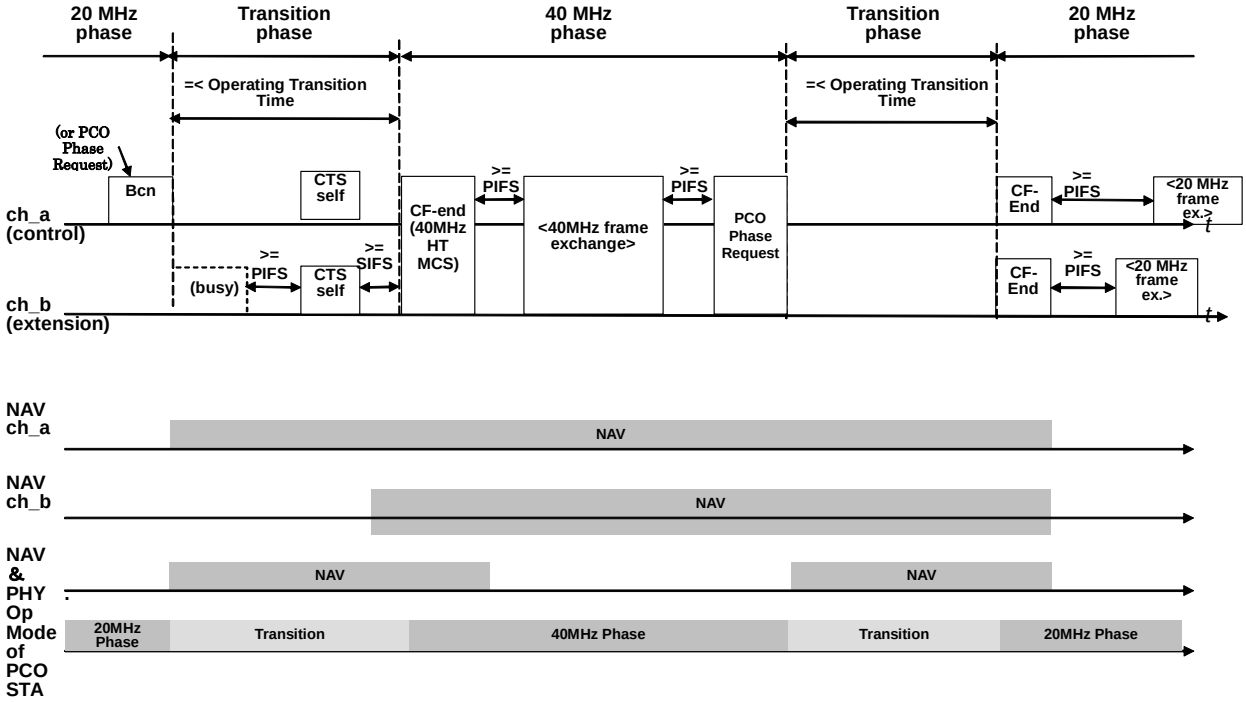

Figure n48 – Phased Coexistence Operations

A PCO capable AP activates PCO if it considers PCO is more appropriate than 40/20 MHz mode and 20 MHz mode in the current circumstances.[6] The PCO capable AP advertises its BSS as both 40/20 MHz capable and PCO capable. It also advertises its PCO operation status. A non PCO capable STA regards the BSS as 40/20 MHz BSS and may associate with the BSS without regard to PCO operation.

During the 40 MHz phase of PCO, the PCO AP and PCO STAs shall send CF-End in a 40 MHz HT mode.

[6] PCO capable AP may consider the capabilities of associated STAs as well as the interferences between the BSS and OBSSs to determine the BSS operation mode.

Copyright © 2006 IEEE. All rights reserved.
This is an unapproved IEEE Standards Draft, subject to change.

11.16.1 Rules for Operation at PCO AP

A PCO capable AP declares its capabilities by HT capability element and the PCO operation status in the Additional HT information element in each beacon. The PCO capable AP shall advertise the BSS as PCO capable and 40/20 MHz capable. A PCO capable AP becomes a PCO AP when the PCO active bit in Additional HT information element is set to 1.

When a PCO AP detects that the PCO is not providing a performance benefit, the PCO AP may deactivate PCO and switch to either 40/20 MHz mode or 20 MHz mode. A PCO capable AP shall set the PCO mode bit in Additional HT information element to 0 when PCO operation is ended. Since the AP advertises the current mode in its beacons, its associated STAs are informed of the mode change.

If an AP chooses to maintain PCO mode and a 40/20 MHz capable non PCO capable STA is associated, the PCO AP shall choose the operation mode using 40 MHz channel width, in which PCO AP can receive and transmit 40 MHz frames during 20 MHz PCO phase.

The PCO AP may increase the transition time if a PCO capable STA associates whose transition time is larger than the one currently used by PCO AP. The method of notification by a PCO capable STA is described in 11.16.2.

A PCO AP that sends a PCO phase request indicating a switch to the 40 MHz phase in a beacon or action frame shall wait for at least the transition time before sending a CF-End in the 40 MHz channel to start the 40 MHz operating phase. A PCO AP that sends a PCO phase request to switch to the 20 MHz phase shall wait for at least a transition time before sending out a CF-End in duplicated non-HT mode to start the 20 MHz operating phase (see Figure n48).

The NAV in a CFP, a CTS-to-Self, a beacon or a PCO phase request that are sent by PCO AP in order to reserve the medium for the 40 MHz phase shall include the transition time between 20 MHz channel width and 40 MHz channel width operation. A PCO AP may continue the CFP after the 40 MHz phase by setting a longer duration for the CFP. The CTS-to-self shall be sent in duplicated non-HT mode. In order to issue this frame, the AP shall sense the extension channel clear at least PIFS period. It need not sense the control channel at since it is already reserved by CFP. The CCA sensing rule in PCO is the same as described in section 9.23.

To avoid an unexpectedly long delay for the extension channel access before 40 MHz phase, the PCO AP starts a timer with a timeout value equal to transition time after transmitting the beacon or a PCO phase request action frame. If the timer expires while attempting to reserve the extension channel, the AP abandons switching to the 40 MHz phase by transmitting a PCO phase request action frame indicating switch-back to 20 MHz phase and a CF-End frame both on the control channel. If the timer expires when the extension channel is already reserved but 40 MHz phase is not started yet, the AP abandons switching to the 40 MHz phase by transmitting a PCO phase request action frame indicating a switch back to 20 MHz phase and it transmits a CF-End frame in duplicated non-HT mode.

Although PCO improves throughput in some circumstances, PCO might also introduce jitter. To minimize the jitter, the maximum duration of 40 MHz phase and 20 MHz phase is dot11PCO40MaxDuration and dot11PCO20MaxDuration, respectively. Also in order for PCO AP to give chances for every STA to send frames, the minimum duration of 40 MHz phase and 20 MHz phase is dot11PCO40MinDuration and dot11PCO20MinDuration, respectively.

During the 40 MHz phase, the PCO AP exchanges frames with PCO STAs using a 40 MHz HT MCS and duplicated non-HT. It shall not send a non-HT or duplicate non-HT CF-End frame but shall send CF-End in 40 MHz HT MCS.

Copyright © 2006 IEEE. All rights reserved.
This is an unapproved IEEE Standards Draft, subject to change.

11.16.2 Rules for Operation at the PCO non-AP STA

A PCO capable non-AP STA declares its own capabilities using the Extended HT Capabilities Info field in the HT capability element of an association request. If in the association request to a PCO AP, the PCO bit is set to 1, the transition time meets the transition time indicated by PCO AP and the association succeeds, the STA shall operate in PCO mode. The PCO STA may also try to associate with a transition time that is larger than one currently advertised by PCO AP. In this case the PCO AP may decide to extend its transition time and to respond with this new transition time value. Also in this case the STA shall operate in PCO mode. If the association succeeds but the related PCO parameters does not meet the PCO STA values, the non-AP STA shall regard the BSS as a 40/20 MHz BSS and shall operate as a 40/20 MHz STA. Non PCO capable STA ignore the PCO signaling and see the BSS as 40/20 MHz capable.

A PCO STA associated with PCO AP may switch its operating phase from 20 MHz channel width to 40 MHz channel width when it receives a beacon frame that contains the PCO phase request bit set to 1 or a PCO phase request action frame with the PCO phase set to 1. The related CFP or duration value shall be interpreted as the duration of the PCO 40 MHz phase.

A PCO STA associated with a PCO AP may switch its operating phase from 40 MHz channel width to 20 MHz channel width when it receives a beacon frame that contains the PCO phase request bit set to 0 or a PCO phase request action frame with the PCO phase set to 0. It also may switch from 40 MHz channel width to 20 MHz channel width when the expected 40 MHz phase duration ends.

During the 40 MHz phase a PCO STA shall transmit data frames using a 40 MHz HT MCS and control frames in duplicated non-HT mode, except any CF-End frame shall be sent in a 40 MHz HT MCS only. The STA shall set its NAV from any frame received in the control or 40 MHz channels.

During the 20 MHz phase the a PCO STA shall only transmit frames using a 20 MHz (HT or non-HT) MCS.

A PCO capable STA shall follow the BSS operation mode by receiving its beacons. In particular, A PCO STA shall halt PCO operation if PCO mode is deactivated by the AP. An HT STA may disassociate and re-associate with the AP to change its PCO capabilities.

12. PHY service specification

12.3.4.4 Vector descriptions

Add the following paragraph to the end of subclause 12.3.4.4:

The clause 20 PHY TXVECTOR and RXVECTOR contain additional parameters related to the operation of the clause 20 PHY modes of operation as described in 20.2. In certain modes of operation, the DATARATE parameter is replaced by a modulation and coding scheme (MCS) value. The mapping from clause 20 MCS to data rate is defined in 20.7.

13. PHY management

14. Frequency-Hopping spread spectrum (FHSS) PHY specification for the 2.4 GHz industrial, scientific, and medical (ISM) band

Copyright © 2006 IEEE. All rights reserved.
This is an unapproved IEEE Standards Draft, subject to change.

15. DSSS PHY specification for the 2.4 GHz band designated for ISM applications

16. Infrared (IR) PHY specification

17. Orthogonal frequency division multiplexing (OFDM) PHY specification for the 5 GHz band

18. High Rate direct sequence spread spectrum (HR/DSSS) PHY specification

19. ERP specification

20. High Throughput PHY specification

20.1 Introduction

This clause specifies the PHY entity for a high throughput orthogonal frequency division multiplexing (HT OFDM) system and the additions that are to be made to the base standard to accommodate the HT OFDM PHY. The HT device shall be compliant with 802.11a/b/g standards. The radio frequency LAN system is aimed for both the 2.4 GHz band and the 5 GHz bands, as specified in subclauses 20.3.8, 20.3.8.1, and 20.3.8.2. The HT OFDM PHY is based on the OFDM PHY defined in Clause 17, with extensions to 2-4 spatial streams, operating in 20 MHz bandwidth. Additionally, 1-4 spatial streams transmission is also defined for operation in 40 MHz bandwidth. Optional modes are capable of supporting data rates up to 600 Mbit/s (4 spatial streams, 40 MHz bandwidth). The HT OFDM PHY data subcarriers are modulated using binary phase shift keying (BPSK), quadrature phase shift keying (QPSK), 16-quadrature amplitude modulation (16-QAM), or 64-QAM. Forward error correction coding (convolutional coding) is used with a coding rate of 1/2, 2/3, 3/4, or 5/6. Low-density parity-check (LDPC) codes are optional. Other optional features at both transmit and receive sides are 400 ns short guard interval (GI), transmit beamforming, Green Field (GF) mode, space-time block codes (STBC), and 40 MHz operation. The HT OFDM PHY defined in Clause 20 is mandatory for all rates specified for the 1 and 2 spatial streams at an AP and for 1 spatial stream at an STA, 20 MHz mode of operation. Support for 1-4 spatial streams in 40 MHz mode shall be optional. The maximum A-MPDU length is 65535 octets.

20.1.1 Scope

This subclause describes the PHY services provided to the IEEE 802.11 wireless LAN MAC by the HT OFDM system. The HT OFDM PHY layer consists of two protocol functions, defined as follows:

Copyright © 2006 IEEE. All rights reserved.
This is an unapproved IEEE Standards Draft, subject to change.

a) A PHY convergence function, which adapts the capabilities of the physical medium dependent (PMD) system to the PHY service. This function is supported by the physical layer convergence procedure (PLCP), which defines a method of mapping the IEEE 802.11 PHY sublayer service data units (PSDU) into a framing format suitable for sending and receiving user data and management information between two or more stations using the associated PMD system.

b) A PMD system whose function defines the characteristics and method of transmitting and receiving data through a wireless medium between two or more stations, each using the HT OFDM PHY.

20.1.2 High Throughput PHY functions

The HT PHY contains three functional entities: the PMD function, the PHY convergence function (PLCP), and the layer management function. Each of these functions is described in detail in 20.3 through 20.5.

The HT PHY service is provided to the MAC through the PHY service primitives defined in Clause 12.

20.1.2.1 High Throughput PLCP sublayer

In order to allow the IEEE 802.11 MAC to operate with minimum dependence on the PMD sublayer, a PHY convergence sublayer is defined (PLCP). The PLCP sublayer simplifies the PHY service interface to the IEEE 802.11 MAC services.

20.1.2.2 High Throughput PMD sublayer

The HT PMD sublayer provides a means to send and receive data between two or more stations. This clause is concerned with the 2.4 GHz and 5 GHz frequency bands using HT OFDM modulation.

20.1.2.3 PHY management entity (PLME)

The PLME performs management of the local PHY functions in conjunction with the MLME.

20.1.2.4 Service specification method

The models represented by figures and state diagrams are intended to be illustrations of the functions provided. It is important to distinguish between a model and a real implementation. The models are optimized for simplicity and clarity of presentation; the actual method of implementation is left to the discretion of the IEEE 802.11 HT PHY compliant developer. The service of a layer or sublayer is the set of capabilities that it offers to a user in the next higher layer (or sublayer). Abstract services are specified here by describing the service primitives and parameters that characterize each service. This definition is independent of any particular implementation.

20.1.3 Operating Mode

The PHY will operate in one of 3 modes –

- **Non-HT Mode** – in this mode packets are transmitted according to clause 17 (OFDM) or 19 (ERP) specification.

Copyright © 2006 IEEE. All rights reserved.
This is an unapproved IEEE Standards Draft, subject to change.

- **Mixed Mode –** in this mode packets are transmitted with a preamble compatible with the non-HT receivers – the non-HT Short Training Field (STF), the non-HT Long Training Field (LTF) and the non-HT signal field are transmitted so they can be decoded by non-HT clause 17 and 19 devices. The rest of the packet has a new format**.** In this mode the receiver shall be able to decode both the Mixed Mode packets and non-HT packets.

- **Green Field –** in this mode high throughput packets are transmitted without a non-HT compatible part. This mode is optional. In this mode the receiver shall be able to decode both Green Field mode packets, Mixed Mode packets and non-HT format packets. An HT device which does not support the reception of a GF packet shall be able to detect that GF transmissions are HT transmissions (as opposed to non-HT transmissions) and treat them as HT packets with a failing HT-SIG cyclic redundancy check (CRC).

The operation of PHY in the frequency domain is divided to the following modes:

- **LM –** Non-HT Mode – equivalent to clause 17 or clause 19 operation

- **HT-Mode –** In HT mode the device operates in either 40MHz bandwidth or 20MHz bandwidth and with one to four spatial streams. This mode includes the HT-duplicate mode.

- **Duplicate Non-HT Mode –** in this mode the device operates in a 40MHz channel composed of two adjacent 20MHz channel. The packets to be sent are in the clause 17 format in each of the 20MHz channels. To reduce the peak-to-average power ratio (PAPR) the upper channel (higher frequency) is rotated by 90º relative to the lower channel.

- **40 MHz Upper Mode –** used to transmit a non-HT or HT packet in the upper 20MHz channel of a 40MHz channel.

- **40 MHz Lower Mode –** used to transmit a non-HT or HT packet in the lower 20MHz channel of a 40MHz channel

LM is mandatory and HT-Mode for 1 and 2 spatial streams at 20MHz are mandatory at the AP. LM is mandatory and HT-Mode for 1 spatial stream at 20MHz is mandatory for non-AP STAs.

20.2 High Throughput PHY specific service parameter list

20.2.1 Introduction

The PHY interfaces to the MAC through the TX vector and the RX vector. The TX vector supplies the PHY with per-packet [7] TX parameters. Using the RX vector, the PHY informs the MAC of the received packet parameters. The specification of this interface is outside the scope of this document.

20.2.2 TXVECTOR parameters

The parameters in Table n60 are defined as part of the TXVECTOR parameter list in the PHY-TXSTART.request service primitive.

Table n60—TXVECTOR parameters

Copyright © 2006 IEEE. All rights reserved.
This is an unapproved IEEE Standards Draft, subject to change.

Parameter	Associate primitive	Value
L-LENGTH	PHY-TXSTART.request (TXVECTOR)	1-4095
L-DATARATE	PHY-TXSTART.request (TXVECTOR)	6, 9, 12, 18, 24, 36, 48, 54
SERVICE	PHY-TXSTART.request (TXVECTOR)	Scrambler Initialization, 7 null bits + 9 reserved null bits.
TXPWR_LEVEL	PHY-TXSTART.request (TXVECTOR)	1-8
FORMAT	PHY-TXSTART.request (TXVECTOR)	0 - NON_HT 1 - HT_MM 2 - HT_GF
MCS	PHY-TXSTART.request (TXVECTOR)	0-76, MCS index defined in Table n88 to Table n102.
BW	PHY-TXSTART.request (TXVECTOR)	0 -HT_BW20 – 20MHz , 1 - HT_BW40 – 40MHz, 2 - HT_BW_20DL – Duplicate Legacy 3 - HT_BW_20DH – Duplicate HT
CH_OFFSET	PHY-TXSTART.request (TXVECTOR)	0 – CH_OFF_40 – The whole 40Mhz 1 – CH_OFF_20U – Upper 20Mhz in 40Mhz 3 – CH_OFF_20L – Lower 20MHz in 40Mhz
LENGTH	PHY-TXSTART.request (TXVECTOR)	0-65535
SMOOTHING	PHY-TXSTART.request (TXVECTOR)	1 – Smoothing is recommended 0 – Smoothing is not recommended
NOT_SOUNDING	PHY-TXSTART.request (TXVECTOR)	1 – Not a sounding packet 0 – a sounding packet
AGGREGATION	PHY-TXSTART.request (TXVECTOR)	1 – a packet with A-MPDU aggregation 0 – a packet without A-MPDU aggregation
STBC	PHY-TXSTART.request (TXVECTOR)	Indicates the difference between either the number of space time streams NSTS and the number of spatial streams NSS indicated by the MCS 00 – No STBC (NSTS=NSS)
ADVANCED_CODING	PHY-TXSTART.request (TXVECTOR)	0 – Binary Convolutional Code 1 – Low Density Parity Check Code
SHORT_GI	PHY-TXSTART.request (TXVECTOR)	0 – Short GI is not used in the packet 1 – Short GI is used in the packet
NUM_EXTEN_SS	PHY-TXSTART.request (TXVECTOR)	Number of extension spatial stream(s) 0-3
ANTENNA_SET	PHY-TXSTART.request (TXVECTOR)	Bit field with 8 bits
EXPANSION_MAT	PHY-TXSTART.request (TXVECTOR)	$(N_{SD} + N_{SP})$ complex matrices of size $N_{TX} \times N_{STS}$

20.2.2.1 TXVECTOR L_LENGTH

The allowed values for the L_LENGTH parameter are in the range of 1 to 4095. In a non-HT frame this parameter is used to indicate the number of octets in the MPDU which the MAC is currently requesting the PHY to transmit. This value is used by the PHY to determine the number of octet transfers that will occur

Copyright © 2006 IEEE. All rights reserved.
This is an unapproved IEEE Standards Draft, subject to change.

between the MAC and the PHY after receiving a request to start the transmission. In a HT frame the value to be used is defined in 20.3.3.2.1.4.

20.2.2.2 TXVECTOR L_DATARATE

The DATARATE parameter describes the bit rate at which the PLCP shall transmit the PSDU. In a non-HT frame its value can be any of the rates defined in Table 136. Data rates of 6, 12, and 24 Mbit/s shall be supported for 20 MHz channel spacing, and data rates of 3, 6, and 12 Mbit/s shall be supported for 10 MHz channel spacing; other rates may also be supported. In a HT-frame the value is 6Mbps.

20.2.2.3 TXVECTOR SERVICE

The SERVICE parameter consists of 7 null bits used for the scrambler initialization and 9 null bits reserved for future use.

20.2.2.4 TXVECTOR TXPWR_LEVEL

The allowed values for the TXPWR_LEVEL parameter are in the range from 1 to 8. This parameter is used to indicate which of the available TxPowerLevel attributes defined in the MIB shall be used for the current transmission.

20.2.2.5 TXVECTOR FORMAT

The FORMAT field defines the format of the PLCP. The allowed values are:

— NON_HT for clause 17 devices or for devices with in duplicate legacy mode,

— HT_MM for high throughput mixed mode PLCP format

— HT_GF for high throughput green field PLCP format

20.2.2.6 TXVECTOR MCS

The MCS field defines the modulation and coding scheme to be used in the transmission of the packet. The value of be used in each modulation and coding scheme is the index defined in the first column of Table n88 to Table n102.

20.2.2.7 TXVECTOR BW

The BW parameter defines whether the packet is transmitted over a 40MHz BW or a 20MHz bandwidth. There are two additional modes for transmission over 40MHz indicated – transmission in a duplicate legacy or HT mode. The selection between these modes is according to this parameter.

20.2.2.8 TXVECTOR CH_OFFSET

The CH_OFFSET parameter whether the upper or lower 20MHz part of a 40MHz channel will be used for transmission. Allowed values are CH_OFF_40 – the whole channel is used, CH_OFF_U20 - the upper 20MHz channel is used, and CH_OFF_L20 – the lower 20MHz channel is used.

Copyright © 2006 IEEE. All rights reserved.
This is an unapproved IEEE Standards Draft, subject to change.

20.2.2.9 TXVECTOR LENGTH

The LENGTH parameter defines the number of octets that the MAC is requesting the PHY to transmit. The allowed values for the LENGTH parameter are in the range of 0 to 65535. A value of zero in the LENGTH parameters indicates a zero length packet that contains no data symbols after the preamble.

20.2.2.10 TXVECTOR SMOOTHING

The SMOOTHING parameter is used to define whether frequency domain smoothing is recommended as part of channel estimation. A value of 1 indicates that smoothing is allowed. A value of 0 indicates that only per subcarrier channel estimation is recommended.

20.2.2.11 TXVECTOR NOT_SOUNDING

The NOT_SOUNDING parameter defines whether this packet is a sounding packet. This parameter is set to 0 for a sounding packet and is set to 1 for a non sounding packet.

20.2.2.12 TXVECTOR AGGREGATION

The AGGREGATION parameter is set to if the PSDU contains an A-MPDU. It is set to 0 otherwise

20.2.2.13 TXVECTOR STBC

The STBC parameter defines the difference between the number of space time streams and the number of spatial stream defined by the MCS. A value of 0 indicates that no space time block coding (STBC) is used

20.2.2.14 TXVECTOR ADVANCED_CODING

The ADVANCED_CODING parameter defines whether Binary Convolutional Code (BCC) or Low Density Parity Check Code (LDPCC) encoding is used.

20.2.2.15 TXVECTOR SHORT_GI

The SHORT_GI parameter defines whether a short Guard Interval (GI) is used in the transmission of the packet. A value of 1 indicates transmission with short GI and a value of 0 indicates transmission with regular GI.

20.2.2.16 TXVECTOR NUM_EXTEN_SS

The NUM_EXTEN_SS parameter defines the number of extension spatial streams that will be sounded during the extension part of the high throughput training. Allowed values are in the range of 0 to 3.

20.2.2.17 TXVECTOR ANTENNA_SET

The ANTENNA_SET parameter is a bit field indicating which antennas of the available antennas is used in the transmission. The length of the field is 8 bit. A 1 in the n'th bit indicates that the n'th antenna is used. At most 4 bits out of 8 may be set to 1.

Copyright © 2006 IEEE. All rights reserved.
This is an unapproved IEEE Standards Draft, subject to change.

20.2.2.18 TXVECTOR EXPANSION_MAT

The EXPANSION_MAT parameter defines the expansion matrices that will be used in the transmission of the packet. The use of expansion matrices is defined in 20.3.4.7.1.

20.2.3 RXVECTOR parameters

The parameters listed in Table n61 are defined as part of the RXVECTOR parameter list in the PHY-RXSTART.indicate service primitive.

Table n61—RXVECTOR parameters

Parameter	Associate primitive	Value
L-LENGTH	PHY-RXSTART.indicate (RXVECTOR)	1-4095
RSSI	PHY-RXSTART.indicate (RXVECTOR)	0-RSSI maximum
L-DATARATE	PHY-RXSTART.indicate (RXVECTOR)	6, 9, 12, 18, 24, 36, 48, 54
SERVICE	PHY-RXSTART.indicate (RXVECTOR)	null
FORMAT	PHY-RXSTART.indicate (RXVECTOR)	0 - NON_HT 1 - HT_MM 2 - HT_GF
MCS	PHY-RXSTART.request (RXVECTOR)	0-76, MCS index defined in Table n88 to Table n102.
BW	PHY-RXSTART.request (RXVECTOR)	0 -HT_BW20 – 20MHz , 1 - HT_BW40 – 40MHz, 2 - HT_BW_20DL – Duplicate Legacy 3 - HT_BW_20DH – Duplicate HT
CH_OFFSET	PHY-RXSTART.request (RXVECTOR)	0 – CH_OFF_40 – The whole 40Mhz 1 – CH_OFF_20U – Upper 20Mhz in 40Mhz 3 – CH_OFF_20L – Lower 20MHz in 40Mhz
LENGTH	PHY-RXSTART.request (RXVECTOR)	0-65535
SMOOTHING	PHY-RXSTART.request (RXVECTOR)	1 – Smoothing is recommended 0 – Smoothing is not recommended
NOT_SOUNDING	PHY-RXSTART.request (RXVECTOR)	1 – Not a sounding packet 0 – a sounding packet
AGGREGATION	PHY-RXSTART.request (RXVECTOR)	1 – a packet with A-MPDU aggregation 0 – a packet without A-MPDU aggregation
STBC	PHY-RXSTART.request (RXVECTOR)	Indicates the difference between either the number of space time streams NSTS and the number of spatial streams NSS indicated by the MCS 00 – No STBC (NSTS=NSS)
ADVANCED_CODING	PHY-RXSTART.request (RXVECTOR)	0 – Binary Convolutional Code 1 – Low Density Parity Check Code
SHORT_GI	PHY-RXSTART.request (RXVECTOR)	0 – Short GI is not used in the packet 1 – Short GI is used in the packet

Copyright © 2006 IEEE. All rights reserved.
This is an unapproved IEEE Standards Draft, subject to change.

NUM_EXTEN_SS	PHY-RXSTART.request (RXVECTOR)	Number of extension spatial stream(s) 0-3
CHAN_MAT	PHY-RXSTART.request (RXVECTOR)	$(N_{SD} + N_{SP})$ complex matrices of size $N_{RX} \times N_{STS}$

20.2.3.1 RXVECTOR L_LENGTH

The allowed values for the L_LENGTH parameter are in the range from 1–4095. If the packet is a non-HT packet this parameter is used to indicate the value contained in the L_LENGTH field which the PLCP has received in the PLCP header. The MAC and PLCP will use this value to determine the number of octet transfers that will occur between the two sublayers during the transfer of the received PSDU. If the packet is a non_HT packet this parameter can be used for L-SIG TXOP protection as described in 9.15.

20.2.3.2 RXVECTOR RSSI

The allowed values for the RSSI parameter are in the range from 0 through RSSI maximum. This parameter is a measure by the PHY of the average energy observed at the antennas used to receive the current PPDU. RSSI shall be measured during the reception of the PLCP preamble. RSSI is intended to be used in a relative manner, and it shall be a monotonically increasing function of the received power.

20.2.3.3 RXVECTOR L-DATARATE

If the packet is a non-HT packet, DATARATE shall represent the data rate at which the current PPDU was received. The allowed values of the DATARATE are 6, 9, 12, 18, 24, 36, 48, or 54 Mbit/s for 20 MHz channel spacing and 3, 4.5, 6, 9, 12, 18, 24, or 27 Mbit/s for 10 MHz channel spacing. If the packet is a HT-packet, this parameter is invalid.

20.2.3.4 RXVECTOR SERVICE

The SERVICE field shall be null.

20.2.3.5 RXVECTOR FORMAT

The FORMAT field indicates the format of the current received PPDU. The allowed values are:

— NON_HT for clause 17 devices or for devices with in duplicate legacy mode,

— HT_MM for high throughput mixed mode PLCP format

— HT_GF for high throughput green field PLCP format

20.2.3.6 RXVECTOR MCS

The MCS parameter shall indicate the MCS in which the current PPDU was received. Allowed values are 0-77. The value is the value of the MCS in the first column in Table n88 to Table n102.

20.2.3.7 RXVECTOR BW

Copyright © 2006 IEEE. All rights reserved.
This is an unapproved IEEE Standards Draft, subject to change.

The BW parameter shall indicate the bandwidth in which the current PPDU was received. Allowed values are HT_BW20 for 20MHz bandwidth and HT_BW40 for 40MHz bandwidth, HT_BW_20DL for duplicate legacy and HT_BW_20UL for duplicate HT.

20.2.3.8 RXVECTOR CH_OFFSET

The CH_OFFSET parameter shall indicate whether the whole 40MHz channel was used or only the upper or lower 20MHz.

20.2.3.9 RXVECTOR LENGTH

The LENGTH parameter indicates the number of data octets that are part of the PPDU. The allowed values for this parameter are 0-65535. This parameter is used to indicate the value received in the LENGTH subfield of the SIG field of the PPDU. The MAC and PLCP will use this value to determine the number of octet transfers that will occur between the two sublayers during the transfer of the received PPDU. A value of zero in the LENGTH parameter indicates that the received PPDU was a zero length frame that contains no data symbols after the preamble.

20.2.3.10 RXVECTOR SMOOTHING

The SMOOTHING parameter indicates whether frequency domain smoothing of the channel estimate is recommended during the reception of the HT-LTF fields in the received PPDU. A value of 1 indicates that smoothing is allowed. A value of zero indicates the smoothing is not recommended.

20.2.3.11 RXVECTOR NOT_SOUNDING

The NOT_SOUNDING parameter indicates whether the received PPDU was a sounding PPDU. A value of 0 indicates a sounding PPDU. A value of 1 indicates a non-sounding PPDU.

20.2.3.12 RXVECTOR AGGREGATION

The AGGREGATION parameter indicates whether the received PSDU contains an A-MPDU. It is set to 1 otherwise.

20.2.3.13 RXVECTOR STBC

The STBC parameter indicates the difference between the number of space time streams and the number of spatial streams in the current received packet. Allowed values are 0, 1, and 2.

20.2.3.14 RXVECTOR SHORT_GI

The SHORT_GI parameter indicates whether short GI was used in the transmission of the current received PPDU.

20.2.3.15 RXVECTOR NUM_EXTEN_SS

Copyright © 2006 IEEE. All rights reserved.
This is an unapproved IEEE Standards Draft, subject to change.

The NUM_EXTEN_SS parameter indicates the number of extension spatial streams used in the transmission of the extension HT-LTF fields of the current received packet.

20.2.3.16 RXVECTOR CHAN_MAT

The CHAN_MAT parameter contains the channel response matrices that were measured during the reception of the current PPDU. Each matrix has N_{RX} rows and N_{STS} columns corresponding to the number of receive chains and the number of space time streams that were measured during the current PPDU. Each element in the matrix is a complex number. The number of matrices is $(N_{SD} + N_{SP})$ - the sum of the number of data subcarriers and the number of pilot subcarriers in the current received PPDU.

20.3 High Throughput PLCP sublayer

20.3.1 Introduction

This subclause provides a convergence procedure for the High Throughput PHY in which PSDUs are converted to and from PPDUs. During transmission, the PSDU shall be appended to the PLCP preamble and header to create the PPDU. At the receiver, the PLCP preamble and header are processed to aid in demodulation and delivery of the PSDU.

Two sets of preambles and headers are defined. For mixed mode operation, the preamble and the header have a Compatibility portion and a High Throughput portion. The Compatibility portion of the Mixed Mode preamble enables detection of the PPDU and acquisition of carrier frequency and timing by both High Throughput devices and devices that are compliant with clause 17 and/or clause 19. The compatibility portion of the Mixed Mode header consists of the SIGNAL field defined in clause 17 and is thus decodable by devices compliant with clause 17 and clause 19, as well as High Throughput devices.

The High Throughput portion of the Mixed Mode preamble enables estimation of the MIMO channel to support demodulation of the High Throughput data by High Throughput devices. The High Throughput portion of the Mixed Mode header consists of the High Throughput SIGNAL field that supports High Throughput operation, and the SERVICE field.

For Green Field operation, compatibility with clause 17 and clause 19 devices is not required. Therefore, the Compatibility portions of the preamble and the header are not included in the Green Field preamble and header.

20.3.2 PLCP frame format

Two new formats are defined for the PLCP (PHY Layer Convergence Protocol): Mixed mode and Green Field. These two formats are called HT formats. Figure n49 shows the non-HT format and the HT formats. In addition to the HT formats, there is a non-HT duplicate format (specified in 20.3.4.8) that duplicates the 20MHz non-HT packet in two 20MHz halves of a 40MHz channel.

Copyright © 2006 IEEE. All rights reserved.
This is an unapproved IEEE Standards Draft, subject to change.

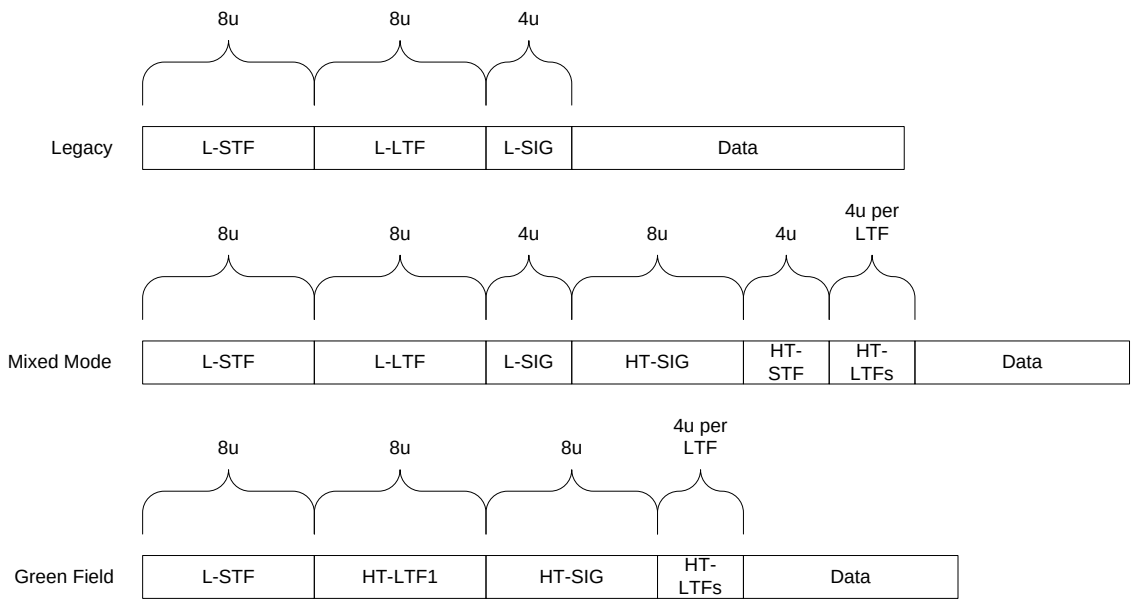

Figure n49- PLCP packet format

The elements of the PCLP packet are:

— L-STF: Non-HT Short Training Field

— L-LTF: Non-HT Long Training Field

— L-SIG: Non-HT Signal Field

— HT-SIG: High Throughput Signal Field

— HT-STF: High Throughput Short Training Field

— HT-LTF1: First High Throughput Long Training Field

— HT-LTF's: Additional High Throughput Long Training Fields

— Data – The data field includes the PSDU (PHY sub-layer Service Data Unit)

The HT-SIG, HT-STF and HT-LTF's exist only in HT packets. In non-HT and non-HT duplicate formats only the L-STF, L-LTF, L-SIG and Data fields exist.

In both the Mixed Mode and Green Field frame formats, there are two types of HT-LTFs: Data HT-LTFs (DLTFs) and Extension HT-LTFs (ELTFs). DLTFs provide the necessary reference for the receiver to form a channel estimate that allows it to demodulate the data portion of the frame. DLTFs are always included in High Throughput frames, and the number is determined by the number of space time streams being transmitted in the frame (see Table n71). ELTFs provide additional reference in sounding PPDUs so that the receiver can form an estimate of additional dimensions of the channel beyond those that are used by the data portion of the frame. PLCP preambles in High Throughput frames that include both DLTFs and ELTFs are referred to as staggered preambles.

Copyright © 2006 IEEE. All rights reserved.
This is an unapproved IEEE Standards Draft, subject to change.

20.3.2.1 Transmitter Block Diagram (informative)

The transmitter is composed of the following blocks:

- **Scrambler** – scrambles the data to prevent long sequences of zeros or ones – see 20.3.4.2.
- **Encoder Parser** – de-multiplexes the scrambled bits among N_{ES} FEC encoders, in a round robin manner.
- **FEC encoders** – encodes the data to enable error correction – an FEC encoder may include a binary convolutional encoder followed by a puncturing device, or an LDPC encoder
- **Stream Parser** – divides the outputs of the encoders into blocks that will be sent to different interleaver and mapping devices. The sequences of the bits sent to the interleavers are called **spatial streams**.
- **Interleaver** – interleaves the bits of each spatial stream (changes order of bits) to prevent long sequences of adjacent noisy bits from entering the FEC decoder.
- **QAM mapping** – maps the sequence of bits in each spatial stream to constellation points (complex numbers).
- **Space Time Block coding** – constellation points from one spatial stream are spread into two **space time streams** using a space time block code.
- **Spatial Mapping** – maps space time streams to different transmit chains. This may include one of the following:
    - **Direct mapping** –constellation points from each space time stream are sent to a different transmit chain.
    - **Spatial expansion –**vectors of constellation points from all the space time streams are multiplied by a matrix to produce the input to the transmit chains.
    - **Beamforming -** similar to spatial expansion: each vector of constellation points from all the space time streams is multiplied by a matrix of steering vectors to produce the input to the transmit chains.
- **Inverse Fast Fourier Transform** – converts a block of constellation points to a time domain block.
- **Cyclic shift insertion –** inserts the cyclic shift into the time domain block. In the case that spatial expansion is applied that increases the number of transmit chains, the cyclic shift may be applied in the frequency domain as part of spatial expansion.
- **Guard interval (GI) insertion –** inserts the guard interval.
- **Optional windowing** – smoothing the edges of each symbol to increase spectral decay

Copyright © 2006 IEEE. All rights reserved.
This is an unapproved IEEE Standards Draft, subject to change.

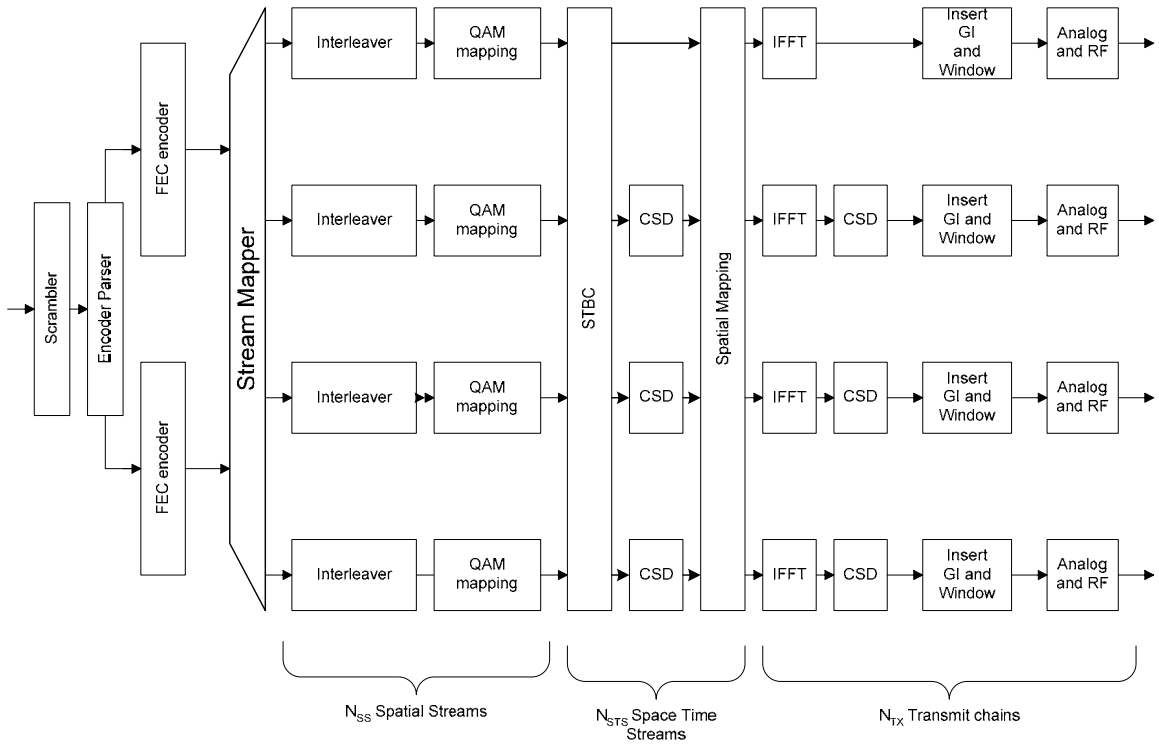

Figure n50 - Transmitter block diagram

Figure n50 shows a block diagram of the transmitter. Different implementations are possible as long as they are mathematically equivalent.

20.3.2.2 Overview of the PPDU encoding process

The encoding process is composed of many detailed steps, which are described fully in later subclauses, as noted below. The following overview is intended to facilitate understanding of the details of the convergence procedure:

a) Determine the number of transmit chains, N_{TX}, from the ANTENNA_SET of the TXVECTOR. Produce the PLCP Preamble fields for each of the N_{TX} transmit chains. The format and relative placement of the PLCP Preamble fields will vary depending on the frame format being used, as indicated by the GF_MODE, NUM_EXTEN_SS, and MCS fields of the TXVECTOR. Determine spatial mapping to be used for HT_STF and HT-LTFs in MM frame and L-STF and HT-STFs in GF frame from EXPANSION_MAT field of the TXVECTOR. Refer to subclause 20.3.3 for details.

b) Produce the PLCP header fields from the appropriate fields of the TXVECTOR by filling the corresponding bit fields, adding tail bits, applying convolutional coding, formatting into one or more OFDM symbols, applying spatial processing, calculating an inverse Fourier transform for each OFDM symbol and transmit chain, and prepending a cyclic prefix, or guard interval (GI) to each OFDM symbol in each transmit chain. The number and placement of the PLCP header fields depends on the frame format being used. Refer to subclauses 20.3.3.2.1.4, 20.3.3.2.2.2 and 20.3.3.3.3.

Copyright © 2006 IEEE. All rights reserved.
This is an unapproved IEEE Standards Draft, subject to change.

c) Append the PLCP Preamble fields and the PLCP header fields for each transmit chain one field after another, in the appropriate order, as described in subclause 20.3.2 and subclause 20.3.2.5.

d) Calculate from MCS field of the TXVECTOR the number of data bits per OFDM symbol (N_{DBPS}), the coding rate (R), the number of coded bits in each OFDM subcarrier (N_{BPSC}), and the number of coded bits per OFDM symbol (N_{CBPS}). Determine the number of encoding streams (N_{ES}) from the MCS and ADVANCED_CODING fields of the TXVECTOR. Refer to subclauses 20.3.4.3 and 20.7 for details.

e) Append the PSDU to the SERVICE field of the TXVECTOR. If BCC encoding is to be used, as indicated by the ADVANCED_CODING field of the TXVECTOR, extend the resulting bit string with zero bits (at least 6 bits) so that the resulting length will be a multiple of NDBPS, as described in subclause 20.3.4. If a single BCC encoder is used (the value is 1), the bit string must be extended by at least 6 bits. If two BCC encoders are used (the value is 2), the bit string must be extended by at least 12 bits. If LDPC encoding is to be used, as indicated by the ADVANCED_CODING field of the TXVECTOR, the resulting bit string is padded, if needed, by repeating coded bits rather than using zero bits, as given in the encoding procedure of 20.3.4.3.3.4, and the number of resulting symbols is given by Equation (20-32) of 20.3.4.3.3.4, and the number of repeated coded bits to do the padding is given by equation (20-33) of 20.3.4.3.3.4. The resulting bit string constitutes the DATA part of the packet.

f) Initiate the scrambler with a pseudo-random nonzero seed, generate a scrambling sequence, and XOR it with the string of data bits, as described in subclause 17.3.5.4.

g) If BCC encoding is to be used, replace the scrambled zero bits that serve as tail bits (six bits if the value of N_{ES} is 1, twelve bits if the value of N_{ES} is 2) following the data with the same number of nonscrambled zero bits, as described in subclause 17.3.5.2. (These bits return the convolutional encoder to the zero state and are denoted as tail bits.)

h) If BCC encoding is to be used, and the value of N_{ES} is 2, then the scrambled data bits are divided between two BCC encoders by sending alternating bits to the two different encoders, as described in subclause 20.3.4.3.1.

i) If BCC encoding is to be used, encode the extended, scrambled data string with a rate ½ convolutional encoder. Omit (puncture) some of the encoder output string (chosen according to puncturing pattern) to reach the desired coding rate, R. Refer to subclause 20.3.4.3.2 for details. If LDPC encoding is to be used, encode the scrambled data stream according to subclause 20.3.4.3.3.4**.**

j) Parse the coded bit stream that results from the BCC encoding or LDPC encoding into N_{SS} spatial streams, where the value of N_{SS} is determined from the MCS field of the TXVECTOR. See subclause 20.3.4.4.2 and 20.7 for details.

k) Divide each of the N_{SS} encoded and parsed spatial streams of bits into groups of N_{CBPS} bits. Within each spatial stream and group, perform an "interleaving" (reordering) of the bits according to a rule corresponding to N_{BPSC}. Refer to 20.3.4.4.3 for details.

l) For each of the N_{SS} encoded, parsed and frequency interleaved spatial streams, divide the resulting coded and interleaved data string into groups of $N_{BPSC}(i)$ bits, where i is the index of the spatial stream. For each of the bit groups, convert the bit group into a complex number according to the modulation encoding tables. Refer to 17.3.5.7 for details.

Copyright © 2006 IEEE. All rights reserved.
This is an unapproved IEEE Standards Draft, subject to change.

m) Divide the complex number string for each of the resulting N_{SS} spatial streams into groups of N_{SD} complex numbers, where the value of N_{SD} is determined from the BW, CH_OFFSET field of the RXVECTOR. Each such group will be associated with one OFDM symbol in one spatial stream. In each group, the complex numbers will be indexed 0 to $N_{SD}-1$ and mapped hereafter into OFDM subcarriers as described in subclause 20.3.4.7.2, 20.3.4.7.3, 20.3.4.7.4 and 20.3.4.8.

n) If space time block coding (STBC) or hybrid space time block coding/spatial multiplexing (SM) is to be applied, as indicated by the STBC field in the TXVECTOR, operate on the complex number in each data subcarrier in sequential pairs of OFDM symbols as described in subclause 20.3.4.5.1 to generate N_{STS} OFDM symbols for every N_{SS} OFDM symbols associated with the N_{SS} spatial streams. If STBC or hybrid STBC/SM is not to be used, the number of space time streams is the same as the number of spatial streams, and the sequences of OFDM symbols in each space time stream are composed of the sequences of OFDM symbols in the corresponding spatial stream.

o) Determine whether 20 MHz or 40 MHz operation is to be used from the BW, CH_OFFSET field in the TXVECTOR. For 20 MHz operation, insert four subcarriers as pilots into positions –21, –7, 7, and 21. The total number of the subcarriers, N_{ST}, is 56. For 40 MHz operation, insert six subcarriers as pilots into positions -53, -25, -11, 11, 25, and 53, resulting in a total of $N_{ST}=114$ subcarriers. Refer to 20.3.4.8 for details.

p) Map each of the complex numbers in each of the N_{ST} subcarriers in each of the OFDM symbols in each of the N_{STS} space time streams to the N_{TX} transmit chain inputs. For direct-mapped operation, $N_{TX}=N_{STS}$ and there is a one-to-one correspondence between space time streams and transmit chains. In this case, the OFDM symbols associated with each space time stream are also associated with the corresponding transmit chain. Otherwise, a spatial mapping matrix associated with each OFDM subcarrier, as indicated by the EXPANSION_MAT field of the TXVECTOR, is used to perform a linear transformation on the vector of N_{STS} complex numbers associated with each subcarrier in each OFDM symbol. This spatial mapping matrix maps the vector of N_{STS} complex numbers in each subcarrier into a vector of N_{TX} complex numbers in each subcarrier. The sequence of N_{ST} complex numbers associated with each transmit chain (where each of the N_{ST} complex numbers is taken from the same position in the N_{TX} vector of complex numbers across the N_{ST} subcarriers associated with an OFDM symbol) constitutes an OFDM symbol associated with the corresponding transmit chain. For details, see subclause 20.3.4.5.

q) If the BW and CH_OFFSET fields indicate that upper or lower 20MHz are to be used in 20MHz, move the complex numbers associated with subcarriers -28 to 28 in each transmit chain to carriers 6 to 60 in the upper channel or -60 to -6 in the lower channel. The complex numbers in the other subcarriers shall be set to zero.

r) For each group of N_{ST} subcarriers and each of the N_{TX} transmit chains, convert the subcarriers to time domain using inverse Fourier transform. Prepend to the Fourier-transformed waveform a circular extension of itself thus forming a GI, and truncate the resulting periodic waveform to a single OFDM symbol length by applying time domain windowing. Determine the length of the guard interval according to the SHORT_GI field in the TXVECTOR. Refer to 20.3.4.7 and 20.3.4.8 for details.

Copyright © 2006 IEEE. All rights reserved.
This is an unapproved IEEE Standards Draft, subject to change.

s) Append the OFDM symbols associated with each transmit chain one after another, starting after the final field of the PLCP Preamble fields and the PLCP header fields. Refer to subclause 20.3.2 and subclause 20.3.2.5 for details.

t) Up-convert the resulting complex baseband waveform associated with each transmit chain to an RF signal according to the center frequency of the desired channel and transmit. Refer to subclause 20.3.2.5 for details.

20.3.2.3 Modulation and Coding Scheme (MCS)

The Modulation and Coding Scheme (MCS) is a value that determines the modulation, coding and number of spatial channels. It is a compact representation that is carried in the high throughput signal field. Rate dependent parameters for the full set of modulation and coding schemes (MCS) are shown in 20.7 in Table n87 through 102. These tables give rate dependent parameters for MCSs with indices 0 through 76. MCS indices 77-127 are reserved.

MCS Table n87 through Table n91 show rate-dependent parameters for equal-modulation MCSs in one, two, three, and four streams for 20 MHz operation. Table n92 through Table n95 show rate-dependent parameters for equal-modulation MCSs in one, two, three, and four streams for 40 MHz operation. The same equal modulation MCSs are used for 20 MHz and 40 MHz operation. Table n96 shows rate-dependent parameters for the 40 MHz, 6 Mbps HT duplicate mode.

The remaining Tables, Table n97 through Table n102 , show rate-dependent parameters for the MCSs with unequal modulation for use with TxBF and unbalanced STBC modes. These are the cases where two spatial streams (N_{SS}=2) are encoded into three space time streams (N_{STS}=3), and three spatial streams (N_{SS}=3) are encoded into four space time streams (N_{STS}=4) These cases are specified in Table n75. Table n97 through Table n99 are for 20 MHz operation. Tables Table n100 through Table n102 are for 40 MHz operation. The same unequal modulation MCSs are used in 20 MHz and 40 MHz operation.

MCS 0 through 15 are mandatory in 20 MHz with 800 nsec guard interval at an access point (AP). MCS 0 through 7 are mandatory in 20MHz with 800ns guard interval at all STAs. All other MCSs and modes are optional, specifically including Tx (transmit) and Rx (receive) support of 400 nsec guard interval, operation in 40 MHz, and support of MCSs with indices 16 through 76.

20.3.2.4 Timing related parameters

Table n62 - Timing related constants

Parameter	Value in non-HT 20MHz channel	Value in 20MHz HT channel	Value in 40MHz channel	
			HT format	Non-HT Duplicate
N_{SD}: Number of data subcarriers	48	52	108	48[8]
N_{SP}: Number of pilot subcarriers	4	4	6	4
N_{ST}: Total Number of subcarriers	52	56	114	

[8] This value used for HT duplicate mode

Copyright © 2006 IEEE. All rights reserved.
This is an unapproved IEEE Standards Draft, subject to change.

N_{SR}: *Number of subcarriers occupying half of the overall BW*	26	28	58
Δ_F : *subcarrier frequency spacing*	312.5kHz (20MHz/64)	312.5kHz	312.5kHz (40MHz/128)
T_{FFT}: *IFFT/FFT period*	3.2µsec	3.2µsec	3.2µsec
T_{GI}: *Guard Interval length*	0.8µsec= $T_{FFT}/4$	0.8µsec	0.8µsec
T_{GI2}: *Double GI*	1.6µsec	1.6µsec	1.6µsec
T_{GIS}: *Short Guard Interval length*	0.4µsec= $T_{FFT}/8$	0.4µsec	0.4µsec
$T_{L\text{-}STF}$: *Non-HT Short training sequence length*	8µsec=10× $T_{FFT}/4$	8µsec	8µsec
$T_{L\text{-}LTF}$: *Non-HT Long training sequence length*	8µsec=2× $T_{FFT}+T_{GI2}$	8µsec	8µsec
T_{SYM}: *Symbol Interval*	4µsec= $T_{FFT}+T_{GI}$	4µsec	4µsec
T_{SYMS}: *Short GI Symbol Interval*	3.6µsec= $T_{FFT}+T_{GIS}$	3.6µsec	3.6µsec
$T_{L\text{-}SIG}$	4µsec= T_{SYM}	4µsec	4µsec
$T_{HT\text{-}SIG}$	NA	8µsec= $2T_{SYM}$	8µsec
$T_{HT\text{-}STF}$: *HT STF time*	NA	4µsec	4µsec
$T_{HT\text{-}LTF1}$: *HT first long training field length*	NA	4µsec in mixed mode, 8usec in green field	4µsec in mixed mode, 8usec in green field
$T_{HT\text{-}LTFs}$: *HT second, and subsequent, long training fields length*	NA	4µsec	4µsec

Table n63 - frequently used parameters

Symbol	Explanation
N_{CBPS}	Number of coded bits per symbol
N_{CBPSS}	Number of coded bits per symbol per spatial stream
N_{DBPS}	Number of data bits per symbol
N_{BPSC}	Number of coded bits per single carrier

Copyright © 2006 IEEE. All rights reserved.
This is an unapproved IEEE Standards Draft, subject to change.

N_{STS}	Number of space time streams
N_{SS}	Number of spatial streams
N_{ESS}	Number of extension spatial streams
N_{TX}	Number of transmit chains.
N_{ES}	Number of FEC encoders
N_{LTF}	Number of HT long training fields
N_{DLTF}	Number of Data HT long training fields
N_{ELTF}	Number of Extension HT long training fields

20.3.2.5 Mathematical description of signals

For the description of the convention on mathematical description of signals see 17.3.2.4

In the case of a non-HT mode and HT mode transmission over a 20MHz channel, the channel is divided into 64 sub-carriers. In the non-HT mode, signal is transmitted on sub-carriers -26 to -1 and 1 to 26, with 0 being the center (DC) carrier. In the HT modes signal is transmitted on sub-carriers -28 to -1 and 1 to 28.

In the case of a 40MHz HT transmission, two adjacent 20MHz channels are used. The channel is divided into 128 sub-carriers. Signal is transmitted on sub-carriers -58 to -2 and 2 to 58.

In the case of the non-HT duplicate mode over 40MHz, the same data are transmitted over two adjacent 20MHz channels. In this case the 40MHz channel is divided into 128 sub-carriers and the data are transmitted on carriers -58 to -6 and 6 to 58.

The transmitted signal is described in a complex base-band signal notation. The actual transmitted signal is related to the complex baseband signal by the following relation:

$$r_{RF}(t) = \mathrm{Re}\left\{ r(t)\exp\left(j2\pi f_c t\right)\right\} \qquad (20\text{-}1)$$

where

$\mathrm{Re}\{\cdot\}$ represents the real part of a complex variable;

f_c is the center frequency of the carrier.

The transmitted baseband signal consists of several fields. The timing boundaries for the various fields are shown in Figure n51.

Copyright © 2006 IEEE. All rights reserved.
This is an unapproved IEEE Standards Draft, subject to change.

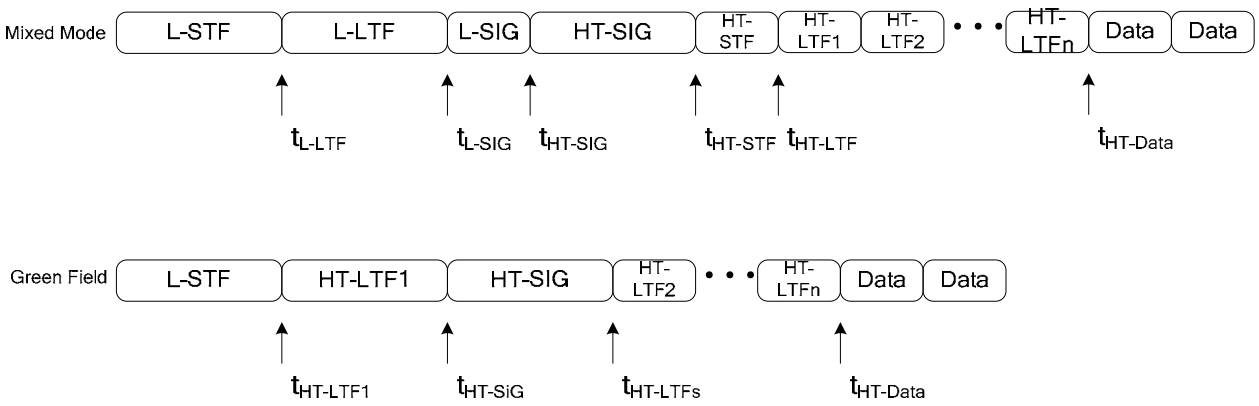

Figure n51: Timing boundaries for PPDU Fields

The time offsets t_{Field} determines the starting time of the corresponding field.

In Mixed mode, the signal transmitted on transmit chain i_{TX} is

$$
\begin{aligned}
r_{PPDU}^{(i_{TX})}(t) \;=\; & r_{L-STF}^{(i_{TX})}(t) + r_{L-LTF}^{(i_{TX})}\left(t - t_{L-LTF}\right) \\
& + r_{L-SIG}^{(i_{TX})}\left(t - t_{L-SIG}\right) \\
& + r_{HT-SIG}^{(i_{TX})}\left(t - t_{HT-SIG}\right) \\
& + r_{HT-STF}^{(i_{TX})}\left(t - t_{HT-STF}\right) \\
& + \sum_{i_{LTF}=1}^{N_{LTF}} r_{HT-LTF}^{(i_{TX},i_{LTF})}\left(t - t_{HT-LTF} - \left(i_{LTF} - 1\right)T_{HT-LTFs}\right) \\
& + r_{HT\ DATA}^{(i_{TX})}(t - t_{HT\ DATA})
\end{aligned}
\qquad (20\text{-}2)
$$

where

$$t_{L-LTF} = T_{L-STF}$$

$$t_{L-SIG} = t_{L-LTF} + T_{L-LTF}$$

$$t_{HT-SIG} = t_{L-SIG} + T_{L-SIG}$$

$$t_{HT-STF} = t_{HT-SIG} + T_{HT-SIG}$$

$$t_{HT-LTF} = t_{HT-STF} + T_{HT-STF}$$

$$t_{HT-Data} = t_{HT-LTF} + N_{LTF} \cdot T_{HT-LTFs}$$

In the case of Green Field mode the transmitted signal on transmit chain i_{TX} is:

Copyright © 2006 IEEE. All rights reserved.
This is an unapproved IEEE Standards Draft, subject to change.

$$
\begin{aligned}
r_{PPDU}^{(i_{TX})}(t) \;=\; & r_{L-STF}^{(i_{TX})}(t) + r_{HT-LTF1}^{(i_{TX})}\left(t - t_{HT-LTF1}\right) \\
& + r_{HT-SIG}^{(i_{TX})}\left(t - t_{HT-SIG}\right) \\
& + \sum_{i_{LTF}=2}^{N_{LTF}} r_{HT-LTF}^{(i_{TX},i_{LTF})}\left(t - t_{HT-LTFs} - \left(i_{LTF} - 2\right)T_{HT-LTFs}\right) \\
& + r_{HT\ DATA}^{(i_{TX})}(t - t_{HT\ DATA})
\end{aligned}
\tag{20-3}
$$

where

$$t_{HT-LTF1} = T_{L-STF}$$

$$t_{HT-SIG} = t_{HT-LTF1} + T_{HT-LTF1}$$

$$t_{HT-LTFs} = t_{HT-SIG} + T_{HT-SIG}$$

$$t_{HT-Data} = t_{HT-LTFs} + (N_{LTF} - 1) \bullet T_{HT-LTFs}$$

Each baseband waveform $r_{Field}^{(i)}(t)$ is defined via the discrete Fourier transform as

$$r_{Field}^{(i)}(t) = \frac{1}{\sqrt{N_{Field}^{Tone}}}\, w_{T_{Field}}(t) \sum_{k} X_k^{(i)} \exp\left(j 2\pi k \Delta_F t \right) \tag{20-4}$$

This general representation holds for all fields. The definition of $w_{T_{Field}}(t)$ is given in 17.3.2.4. The frequency domain symbols $X_k^{(i_{TX})}$ define the field, as shall be specified in the following subclause.

The $1/\sqrt{N_{Field}^{Tone}}$ scale factor in Equation (20-48) ensures that the total power of the time domain signal as summed over all transmit chains is either 1 or lower than 1 when required. Table n64 summarizes the various values of N_{Field}^{Tone}.

Table n64 - number of tones in each field

Field	N_{Field}^{Tone}	
	20 MHz	**40 MHz**
L-STF	12	24
L-LTF	52	104

Copyright © 2006 IEEE. All rights reserved.
This is an unapproved IEEE Standards Draft, subject to change.

L-SIG	52	104
HT-SIG	52/56 – see note 1	104/114 - see note 1
HT-STF	12	24
HT-LTF	56	114
HT-Data	56	114
HT-Data- 40 MHz Dup. Format	-	104
NOTE 1— 56 and 114 are for green field mode, 52 and 104 are for mixed mode. NOTE 2—The numbers in the table refer only to the value of N_{Field}^{Tone} as it appears in Equation (20-48) and in subsequent specification of various fields. It may be different from the actual number of tones being transmitted.		

20.3.2.6 Transmission in the upper/lower 20MHz of a 40MHz channel

When transmitting in the upper/lower 20MHz portion of a 40MHz channel, the mathematical definition of transmission shall follow that of a 20MHz channel with f_c in Equation (20-19) replaced by $f_c \pm 10MHz$.

20.3.3 High Throughput Preamble

20.3.3.1 Introduction

The HT preambles are defined in Mixed mode and in Green Field mode to carry the required information to operate in a system with multi-transmit and multi-receive antennas. To ensure the compatibility with legacy devices, specific HT fields are defined in addition to the legacy fields in the Mixed mode of operation. In the Green Field mode of operation, the specific HT fields replace some of the legacy fields. These specific HT fields are:

— HT Signal Field (HT-SIG) which provide all the information required to interpret the high throughput packet format,

— One HT Short Training Field (HT-STF) for AGC refinement ,

— One or several HT Long Training Fields (HT-LTF) which provide means for the receiver to estimate the channel between each spatial mapper input and receive chain. The first HT LTFs (Data HT LTFs) are necessary for demodulation of the HT-Data portion of the PPDU, and are followed by optional HT-LTFs (Extension HT-LTFs) to probe extra spatial dimensions of the MIMO channel.

In the case of multiple transmit chains, the HT preambles use cyclic shift techniques to prevent unintentional beamforming.

20.3.3.2 Mixed Mode preamble and header fields

Copyright © 2006 IEEE. All rights reserved.
This is an unapproved IEEE Standards Draft, subject to change.

In Mixed Mode frames, the preamble and the header have fields that support compatibility with clause 17 and clause 19 devices, and fields that support High Throughput operation. The compatibility portion of the Mixed Mode preamble enables detection of the PPDU and acquisition of carrier frequency and timing by both High Throughput devices and devices that are compliant with clause 17 or clause 19. The compatibility portion of the Mixed Mode header consists of the SIGNAL field defined in clause 17 and is thus decodable by devices compliant with clause 17 and clause 19, as well as High Throughput devices.

The High Throughput portion of the Mixed Mode preamble enables estimation of the MIMO channel to support demodulation of the data portion of the frame by High Throughput devices. The High Throughput portion of the Mixed Mode header consists of the High Throughput SIGNAL field that supports High Throughput operation, and the SERVICE field.

20.3.3.2.1 Non-HT portion of mixed mode preamble

The following subclauses describes the transmission of the non-HT training field and the non-HT signal field as part of a mixed mode packet.

20.3.3.2.1.1 Cyclic shift definition for the non-HT fields.

In the rest of the document cyclic shift is used to prevent unintentional beamforming when the same signal or similar signals are transmitted through different spatial streams or transmit chains. A cyclic shift of length T_{CS} on a signal $s(t)$ on interval $0 \le t \le T$ is defined as follows:

If $T_{CS} \ge 0$, replace $s(t)$ with $s(t - T_{CS})$ when $T_{CS} < t \le T$ and with $s(t - T_{CS} + T)$ when $0 \le t \le T_{CS}$. In this case the cyclic shifted signal is defined as

$$s_{CS}(t;T_{CS})\big|_{T_{CS} \ge 0} = \begin{cases} s(t - T_{CS}) & T_{CS} < t \le T \\ s(t - T_{CS} + T) & 0 \le t \le T_{CS} \end{cases}$$

If $T_{CS} < 0$, replace $s(t)$ with $s(t - T_{CS})$ when $0 \le t < T + T_{CS}$, and with $s(t - T_{CS} - T)$ when $T + T_{CS} \le t \le T$. In this case the cyclic shifted signal is defined as

$$s_{CS}(t;T_{CS})\big|_{T_{CS} < 0} = \begin{cases} s(t - T_{CS}) & 0 \le t < T + T_{CS} \\ s(t - T_{CS} - T) & T + T_{CS} \le t \le T \end{cases}$$

The cyclic shift is applied to each OFDM symbol in the packet separately. The following table specifies the values for the cyclic shifts that are applied in the non-HT short training field (in a mixed mode (MM) packet), the non-HT long training field, and non-HT signal field. It also applies to the HT signal field in a mixed mode packet.

Table n65 - Cyclic shift for non-HT portion of the packet

$T_{CS}^{i_{TX}}$ **values for the non-HT portion of the packet**

Copyright © 2006 IEEE. All rights reserved.
This is an unapproved IEEE Standards Draft, subject to change.

Number of Tx Chains	cyclic shift for Tx chain 1	cyclic shift for Tx chain 2	cyclic shift for Tx chain 3	cyclic shift for Tx chain 4
1	0ns	-	-	-
2	0ns	-200ns	-	-
3	0ns	-100ns	-200ns	-
4	0ns	-50ns	-100ns	-150ns

20.3.3.2.1.2 Non-HT Short Training Field

The L-STF is identical to the clause 17 short training symbol. The non-HT short training OFDM symbol in the 20MHz mode is

$$S_{-26,26} = \sqrt{1/2}\ \{0,0,1+j,0,0,0,-1-j,0,0,0,1+j,0,0,0,-1-j,0,0,0,-1-j,0,0,0,1+j,0,0,0, \\ 0,0,0,0,-1-j,0,0,0,-1-j,0,0,0,1+j,0,0,0,1+j,0,0,0,1+j,0,0,0,1+j,0,0\} \quad (20\text{-}5)$$

The normalization factor $\sqrt{1/2}$ is the QPSK normalization.

The non-HT short training OFDM symbol in 40MHz mode is based on:

$$S_{-58,58} = \sqrt{1/2}\,\{0,0,1+j,0,0,0,-1-j,0,0,0,1+j,0,0,0,-1-j,0,0,0,-1-j,0,0,0,1+j,0,0,0, \\ 0,0,0,0,-1-j,0,0,0,-1-j,0,0,0,1+j,0,0,0,1+j,0,0,0,1+j,0,0,0,1+j,0,0,0,0,0, \\ 0,0,0,0,0,0,0,0,0,0,1+j,0,0,0,-1-j,0,0,0,1+j,0,0,0,-1-j,0,0,0,-1-j,0,0,0,+1+j, \\ 0,0,0,0,0,0,0,-1-j,0,0,0,-1-j,0,0,0,1+j,0,0,0,1+j,0,0,0,1+j,0,0,0,+1+j,0,0\} \quad (20\text{-}6)$$

The tones in the upper sub-channel (sub-carriers 6-58) are phase rotated by +90º. The 90º rotation helps keep the PAPR of the STF in 40MHz comparable to that in 20MHz.

In mixed mode the L-STF on transmit chain i_{TX} is

$$r_{L-STF}^{(i_{TX})}(t) = \frac{1}{\sqrt{N_{TX} \cdot N_{L-STF}^{Tone}}}\, w_{T_{L-STF}}(t) \cdot \\ \left(\sum_{k=-N_{SR}}^{0} S_k \exp\left(j2\pi k\Delta_F \left(t - T_{CS}^{i_{TX}}\right)\right) + \right. \\ \left. \Upsilon \sum_{k=1}^{N_{SR}} S_k \exp\left(j2\pi k\Delta_F \left(t - T_{CS}^{i_{TX}}\right)\right)\right) \quad (20\text{-}7)$$

Copyright © 2006 IEEE. All rights reserved.
This is an unapproved IEEE Standards Draft, subject to change.

$T_{CS}^{i_{TX}}$ takes values from Table n65. The value of Υ is 1 for 20MHz and j in 40MHz. Q_k is defined in 20.3.4.7.1. The L-STF has a period of 0.8 µs. The entire short training field includes ten such periods, with a total duration of T_{L-STF} = 8 µs.

20.3.3.2.1.3 Non-HT Long Training Field

The non-HT long training OFDM symbol is identical to the clause 17 long training OFDM symbol. In the 20MHz mode, the long training OFDM symbol is given by

$$\begin{aligned} L_{-26,26} = \{&1,1,-1,-1,1,1,-1,1,-1,1,1,1,1,1,1,-1,-1,1,1,-1,1,-1,1,1,1,1,0, \\ &1,-1,-1,1,1,-1,1,-1,1,-1,-1,-1,-1,-1,1,1,-1,-1,1,-1,1,-1,1,1,1,1\} \end{aligned} . \tag{20-8}$$

The non-HT long training OFDM signal in the 40MHz mode is based on:

$$\begin{aligned} L_{-58,58} = \{&1,1,-1,-1,1,1,-1,1,-1,1,1,1,1,1,1,-1,-1,1,1,-1,1,-1,1,1,1,1,0, \\ &1,-1,-1,1,1,-1,1,-1,1,-1,-1,-1,-1,-1,1,1,-1,-1,1,-1,1,-1,1,1,1,1,0,0,0,0,0 \\ &0,0,0,0,0,0,1,1,-1,-1,1,1,-1,1,-1,1,1,1,1,1,1,-1,-1,1,1,-1,1,-1,1,1,1,1,0, \\ &1,-1,-1,1,1,-1,1,-1,1,-1,-1,-1,-1,-1,1,1,-1,-1,1,-1,1,-1,1,1,1,1\} \end{aligned} \tag{20-9}$$

The tones in the upper sub-channel (sub-carriers 6-58) are phase rotated by +90º (see Equation (20-11)).

The sub-carriers at ±32 in 40MHz, which are the DC sub-carriers for the non-HT 20MHz transmission, are both nulled in the L-LTF. Such an arrangement allows proper synchronization of the 20MHz non-HT device.

The L-LTF waveform is:

$$\begin{aligned} r_{L-LTF}^{(i_{TX})}(t) = &\frac{1}{\sqrt{N_{TX} \cdot N_{L-LTF}^{Tone}}} w_{T_{L-LTF}}(t) \cdot \\ &\left(\sum_{k=-N_{SR}}^{0} L_k \exp\left(j2\pi k\Delta_F \left(t - T_{GI2} - T_{CS}^{i_{TX}} \right) \right) + \right. \\ &\left. \Upsilon \sum_{k=1}^{N_{SR}} L_k \exp\left(j2\pi k\Delta_F \left(t - T_{GI2} - T_{CS}^{i_{TX}} \right) \right) \right) \end{aligned} \tag{20-10}$$

where

T_{G12} is 1.6 µ sec

Υ is 1 for 20MHz and j for 40MHz.

Copyright © 2006 IEEE. All rights reserved.
This is an unapproved IEEE Standards Draft, subject to change.

20.3.3.2.1.4 The Non-HT Signal Field

The signal field is used to transfer rate and length information. It has different meaning in a clause 17 transmission and when used in a MM HT transmission. This subsection defines the meaning when used for a MM HT transmission.

Rate (4 bits)				R	Length (12 bits)												P	Tail 6bits					
R1	R2	R3	R4															"0"	"0"	"0"	"0"	"0"	"0"
0	1	2	3	4	5	6	7	8	9	10	11	12	13	14	15	16	17	18	19	20	21	22	23

Figure n52 - The signal field

The bits in the rate field are set to [1,1,0,1] – corresponding to a rate of 6Mbps in non-HT representation. The value in the length field is given through the TX vector. This value is used to spoof non-HT devices to defer transmission for a period of time corresponding to the length of the rest of the packet. When L-SIG TXOP Protection is not used (see 9.15), the value to be transmitted is $l = 3\left(\lceil N_{\text{data}} \rceil + N_{LTF} + 3\right) - 3$ where N_{data} is the number of **4usec** symbols in the data portion of the packet. While using short GI N_{data} is equal to the actual number of symbols in the data part of the packet multiplied by $\frac{9}{10}$ .N_{LTF} is the number of HT training symbols. The symbol $\lceil x \rceil$ denotes the lowest integer greater or equal to *x*.

When L-SIG TXOP Protection is used the value of l is defined in 9.15.

If the Length field of the HT-SIG (see Table n68) is set to zero N_{data} shall be set zero in the formula for calculating *l*.

The length field is transmitted least significant bit (LSB) first.

The reserved bit shall be set to 0.

The parity field has the even parity of bits 0-16.

The signal field shall be encoded, interleaved and mapped, and have pilots inserted following the steps described in 17.3.5.5, 17.3.5.6, 17.3.5.8. The stream of 48, complex numbers generated by these steps is $d_k, \quad k = 0 \ldots 47$. The conversion of these into a time domain signal is described in the Table n66.

Copyright © 2006 IEEE. All rights reserved.
This is an unapproved IEEE Standards Draft, subject to change.

Table n66 - generation of the signal field

Modulation Method	Conversion to Time Domain signal
20MHz transmission on several transmit chains – $\boldsymbol{i_{TX}}$'th tx chain	$r_{L-SIG}^{(i_{TX})}(t) = w_{T_{SYM}}(t)\frac{1}{\sqrt{N_{TX}\cdot N_{L-SIG}^{Tone}}}\cdot \left(\sum_{k=0}^{47} d_k \exp\left(j2\pi M(k)\Delta_F\left(t-T_{GI}-T_{CS}^{i_{TX}}\right)\right)+ p_0\sum_{k=-N_{SR}}^{N_{SR}} P_k \exp(j2\pi k\Delta_F\left(t-T_{GI}-T_{CS}^{i_{TX}}\right)\right)$
40MHz transmission on several transmit chains – $\boldsymbol{i_{TX}}$'th Tx chain.	$r_{L-SIG}^{(i_{TX})}(t) = w_{T_{SYM}}(t)\frac{1}{\sqrt{N_{TX}\cdot N_{L-SIG}^{Tones}}}\cdot \left(\sum_{k=0}^{47} d_k \exp\left(j2\pi\left(M(k)-32\right)\Delta_F\left(t-T_{GI}-T_{CS}^{i_{TX}}\right)\right)+ + j\sum_{k=0}^{47} d_k \exp\left(j2\pi\left(M(k)+32\right)\Delta_F\left(t-T_{GI}-T_{CS}^{i_{TX}}\right)\right)+ p_0\sum_{k=-N_{SR}}^{N_{SR}} P_k\left(\exp\left(j2\pi(k-32)\Delta_F\left(t-T_{GI}-T_{CS}^{i_{TX}}\right)\right)+ j\exp\left(j2\pi(k+32)\Delta_F\left(t-T_{GI}-T_{CS}^{i_{TX}}\right)\right)\right)$
$M(k), P_k$ are defined in 17.3.5.9. p_0 is the first pilot value in the sequence defined in 17.3.5.9.	

20.3.3.2.2 The High Throughput portion of mixed mode preamble

When a mixed mode preamble is transmitted the high throughput preamble consists of the HT signal field, the HT short training field and the HT long training fields.

20.3.3.2.2.1 Cyclic shift for the High Throughput portion of Mixed Mode preamble

Throughout the High Throughput portion of a Mixed Mode preamble, cyclic shift is applied to prevent beamforming when similar signals are transmitted in different space time streams. The same cyclic shift is applied to these streams during the transmission of the data portion of the frame. The values of the cyclic

Copyright © 2006 IEEE. All rights reserved.
This is an unapproved IEEE Standards Draft, subject to change.

shift to be used during the High Throughput portion of the Mixed Mode preamble and the data portion of the frame (except the HT-SIG), are specified in Table n67.

Table n67 – Cyclic shift values of HT portion of the packet

$T_{CS}^{i_{STS}}$ values for HT portion of the packet				
Number of spatial streams	**Cyclic shift for space time stream 1**	**Cyclic shift for space time stream 2**	**Cyclic shift for space time stream 3**	**Cyclic shift for space time stream 4**
1	0ns	-	-	-
2	0ns	-400ns	-	-
3	0ns	-400ns	-200ns	-
4	0ns	-400ns	-200ns	-600ns

20.3.3.2.2.2 The High Throughput Signal Field

The high throughput signal field is used to carry information required to interpret the HT packet formats. The high throughput signal field (HT_SIG) includes the following fields:

Table n68 - Fields of High Throughput Signal Field

Field Name	**Number of Bits**	**Explanation and coding**
Modulation and Coding Scheme	7	Index into The MCS table, LSB first
BW 20/40	1	0 if 20MHz or 40 MHz upper/lower; 1 if 40MHz
Length	16	The number of bytes of data in the PSDU – 0-65535. See note 2.
Smoothing	1	1 – channel estimate smoothing is allowed 0 – Only per-carrier independent (unsmoothed) channel estimate is recommended.
Not Sounding	1	Indicates that the packet is a sounding packet. 0 –Sounding Packet 1 – Not a sounding packet
reserved one	1	set to 1
Aggregation	1	Set to 1 to indicate that the PPDU in the data portion of the packet contains an A-MPDU. Set to 0 otherwise

Copyright © 2006 IEEE. All rights reserved.
This is an unapproved IEEE Standards Draft, subject to change.

STBC	2	Indicates the difference between the number of space time streams, N_{STS} and the number of spatial streams N_{SS} indicated by the MCS 00 – No STBC ($N_{STS} = N_{SS}$)
Advanced Coding	1	1 - LDPCC 0 - BCC.
Short GI	1	Set to 1 to Indicate that the short GI is used after the HT training. Set to 0 otherwise
Number of extension HT-LTF	2	Number of extension spatial stream(s) N_{ESS} . –b'00 – no extension spatial stream, b'01 – 1 additional spatial stream, b'10 2 additional spatial streams, b'11 3 additional spatial streams.
CRC	8	CRC of bits 0-23 in HT-SIG1 and bits 0-9 in HT-SIG2 – see subclause 20.3.3.2.2.2.1. The first bit to be transmitted is bit C7 as explained in aforementioned subclause.
Tail Bits	6	Used to terminate the trellis of the convolution coder. Set to 0.
NOTE 1—Integer fields are transmitted least significant bit first. NOTE 2—A value of 0 in the Length Field indicates a PPDU which does not include a data field. The packets ends after the last HT-LTF or the HT-SIG.		

Copyright © 2006 IEEE. All rights reserved.
This is an unapproved IEEE Standards Draft, subject to change.

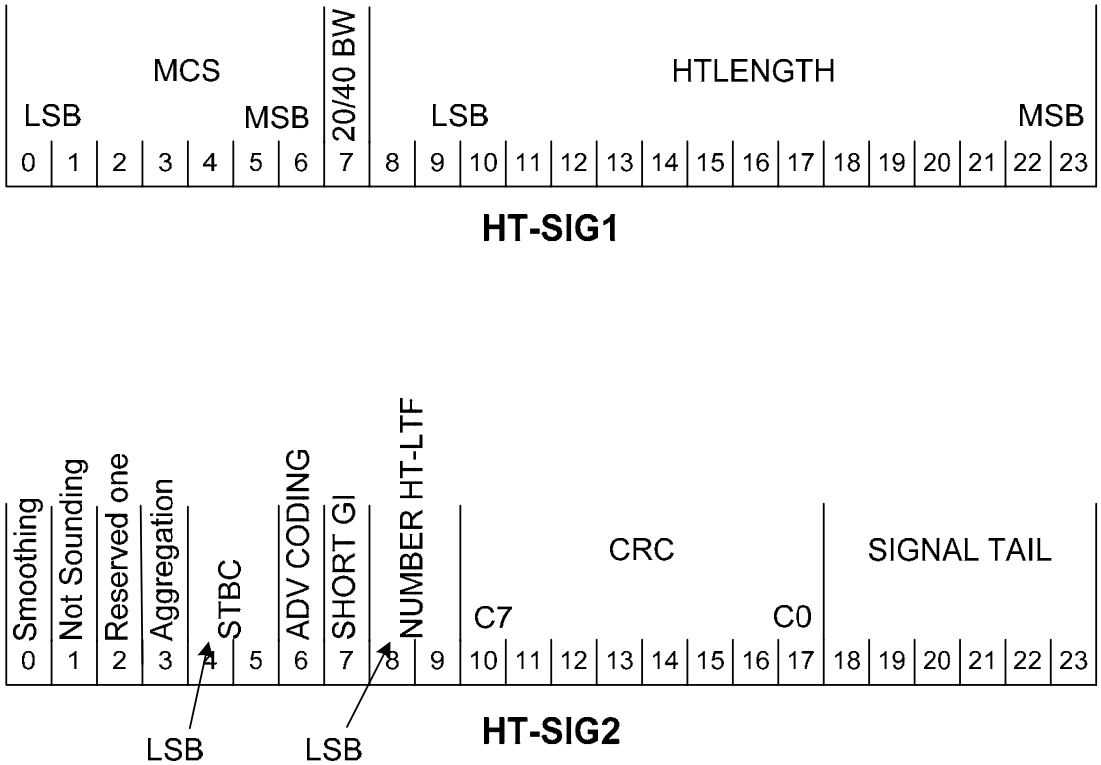

Figure n53 - HT SIG breakdown to HT-SIG1 and HT-SIG2

The HT-SIG is composed of two parts $HTSIG_1$ and $HTSIG_2$ each containing 24 bits. All the fields in the HT-SIG are transmitted LSB first.

The HT-SIG parts are encoded, interleaved, mapped, and have pilots inserted following the steps described in17.3.5.5, 17.3.5.6, 17.3.5.8. The stream of 96, complex numbers generated by these steps are divided into two groups of 48 complex numbers: $d_{k,n}, \quad k = 0 \ldots 47, n = 0,1$ see Figure n53. The conversion of these into the time domain signal is according to the next table:

Copyright © 2006 IEEE. All rights reserved.
This is an unapproved IEEE Standards Draft, subject to change.

Table n69 - Modulation for the High Throughput Signal Field in a Mixed Mode Packet

Modulation Method	Conversion to Time Domain signal
20MHz transmission - i_{TX} 'th stream	$r_{HT-SIG}^{i_{TX}}(t) = \frac{1}{\sqrt{N_{TX} \cdot N^{Tones}}} \sum_{n=0}^{1} w_{T_{SYM}}(t - nT_{SYM}) \cdot \left(j\sum_{k=0}^{47} d_{k,n} \exp\left(j2\pi M(k) \Delta_F \left(t - nT_{SYM} - T_{GI} - T_{CS}^{i_{TX}} \right) \right) + p_{n+z} \sum_{k=-N_{SR}}^{N_{SR}} P_k \exp\left(j2\pi k \Delta_F \left(t - nT_{SYM} - T_{GI} - T_{CS}^{i_{TX}} \right) \right) \right)$
40MHz Tx on several streams – i_{TX} 'th stream	$r_{HT\_SIG}^{i_{TX}}(t) = \frac{1}{\sqrt{N_{TX} \cdot N^{Tones}}} \sum_{n=0}^{1} w_{T_{SYM}}(t - nT_{SYM}) \cdot \left(j\sum_{k=0}^{47} d_{k,n} \exp\left(j2\pi \left(M(k) - 32 \right) \Delta_F \left(t - nT_{SYM} - T_{GI} - T_{CS}^{i_{TX}} \right) \right) - \sum_{k=0}^{47} d_{k,n} \exp\left(j2\pi \left(M(k) + 32 \right) \Delta_F \left(t - nT_{SYM} - T_{GI} - T_{CS}^{i_{TX}} \right) \right) + p_{n+z} \sum_{k=-N_{SR}}^{N_{SR}} P_k \exp\left(j2\pi (k - 32) \Delta_F \left(t - nT_{SYM} - T_{GI} - T_{CS}^{i_{TX}} \right) \right) + jp_{n+z} \sum_{k=-N_{SR}}^{N_{SR}} P_k \exp\left(j2\pi (k + 32) \Delta_F \left(t - nT_{SYM} - T_{GI} - T_{CS}^{i_{TX}} \right) \right) \right)$

where

$M(k), p_n, P_k$ are defined in 17.3.5.9.

N^{Tones} is equal to the number of tones in the HT-SIG.

z is zero in a green field (GF) packet and 1 in a mixed mode packets.

$T_{CS}^{i_{TX}}$ is defined by Table n65 in the case of MM and is defined by Table n67 in the case of GF

Q_k is defined in 20.3.4.7.1.

N_{SR} is 26 tones for both 20MHz and 40MHz

NOTE—this definition results in a BPSK modulation in which the constellation of the data tones is rotated by 90º relative to the non-HT signal field in mixed mode frames, and relative to the first HT-LTF in green field frames.

Copyright © 2006 IEEE. All rights reserved.
This is an unapproved IEEE Standards Draft, subject to change.

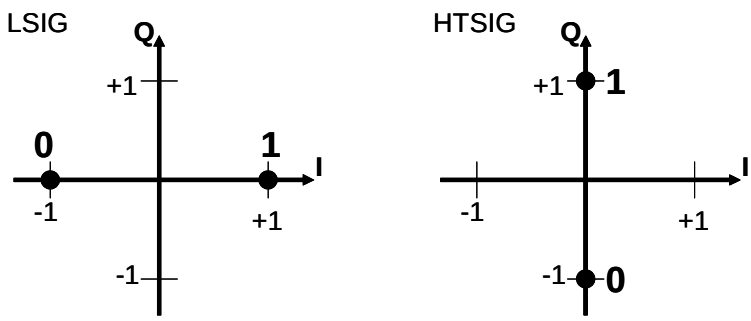

Figure n54 - constellation for the non-HT signal field and the HT signal field

20.3.3.2.2.2.1 CRC calculation

The CRC protects bits 0-33 of the HT-SIG. The value of the CRC field is the ones complement of

$$crc(D)=M(D)D^8 \text{ modulo } G(D) \qquad (20\text{-}11)$$

where

the shift register is initialized to all ones and

$M(D)=m_0D^{k-1}+m_1D^{k-2}+\ldots+m_{k-2}D+m_{k-1}$ is the HT-SIG represented as polynomial where m_0 is bit 0 of HT-SIG1 and m_{33} is bit 9 of HT-SIG2,

$G(D)=D^8+D^2+D+1$ is the CRC generating polynomial, and

$crc(D)=c_0D^7+c_1D^6+\ldots+c_6D+c_7$

The CRC field is transmitted with c_7 first

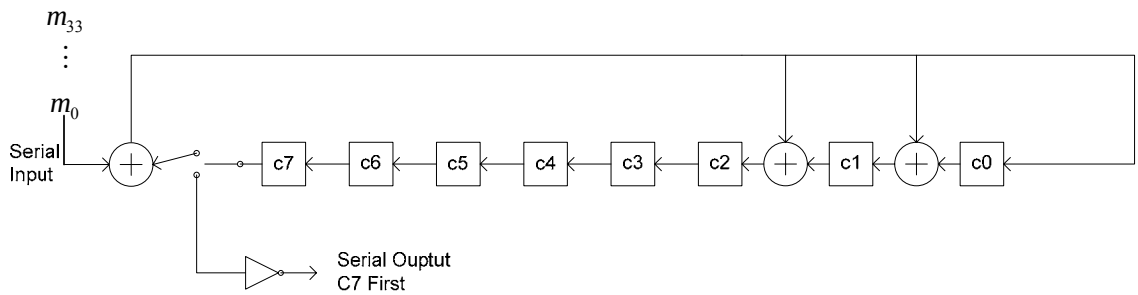

Figure n55 - HT-SIG CRC calculation

Copyright © 2006 IEEE. All rights reserved.
This is an unapproved IEEE Standards Draft, subject to change.

Figure n55 shows the operation of the CRC. First the shift register is reset to all ones. The bits are then passed through the exclusive-or operation (XOR) at the input. When the last bit has entered, the output is generated by shifting the bits out of the shift register, C7 first, through an inverter.

20.3.3.2.2.3 The HT STF training symbol

The purpose of the HT-STF training field is to improve AGC training in a MIMO system. The duration of the HT-STF is 4μsec; the frequency sequence used to construct the HT-STF in 20MHz transmission is identical to non-HT STF; in 40MHz transmission the HT-STF is constructed from the 20MHz version by frequency shifting and duplicating, and rotating the upper sub-carriers by 90°. The frequency sequences are:

For 20MHz:

$$HTS_{-28,28} = \sqrt{1/2}\ \{0,0,0,0,1+j,0,0,0,-1-j,0,0,0,1+j,0,0,0,-1-j,0,0,0,-1-j,0,0,0,1+j,0,0,0,$$
$$0,0,0,0,-1-j,0,0,0,-1-j,0,0,0,1+j,0,0,0,1+j,0,0,0,1+j,0,0,0,1+j,0,0,0,0\} \tag{20-12}$$

The HT-STF in 40MHz is based on:

$$HTS_{-58,58} = \sqrt{1/2}\,\{0,0,1+j,0,0,0,-1-j,0,0,0,1+j,0,0,0,-1-j,0,0,0,-1-j,0,0,0,1+j,0,0,0,$$
$$0,0,0,0,-1-j,0,0,0,-1-j,0,0,0,1+j,0,0,0,1+j,0,0,0,1+j,0,0,0,1+j,0,0,0,0,0,$$
$$0,0,0,0,0,0,0,0,0,0,1+j,0,0,0,-1-j,0,0,0,1+j,0,0,0,-1-j,0,0,0,-1-j,0,0,0,+1+j,$$
$$0,0,0,0,0,0,0,-1-j,0,0,0,-1-j,0,0,0,1+j,0,0,0,1+j,0,0,0,1+j,0,0,0,+1+j,0,0\} \tag{20-13}$$

The time domain representation of the transmission in the i_{TX} $'th$ transmit chain is:

$$r_{HT-STF}^{i_{TX}}(t) = w_{T_{HT-STF}}(t)\frac{1}{\sqrt{N_{STS}N_{HT-STF}^{Tones}}}\bullet$$
$$\left(\sum_{k=-N_{SR}}^{0}\sum_{i_{STS}=1}^{N_{STS}}\left[Q_k\right]_{i_{TX},i_{STS}} HTS(k)\exp\left(j2\pi k\Delta_F\left(t-T_{CS}^{i_{STS}}\right)\right)\right. \tag{20-14}$$
$$\left.+\Upsilon\sum_{k=1}^{N_{SR}}\sum_{i_{STS}=1}^{N_{STS}}\left[Q_k\right]_{i_{TX},i_{STS}} HTS(k)\exp\left(j2\pi k\Delta_F\left(t-T_{CS}^{i_{STS}}\right)\right)\right)$$

The value of Υ is 1 for 20MHz and j in 40MHz. The values for $T_{CS}^{i_{STS}}$ are given in Table n67. Q_k is defined in 20.3.4.7.1.

Copyright © 2006 IEEE. All rights reserved.
This is an unapproved IEEE Standards Draft, subject to change.

20.3.3.2.2.4 The HT-LTF long training Field

The HT long training field provides means for the receiver to estimate the MIMO channel between the set of QAM mapper outputs (or, if STBC is applied, the STBC encoder outputs) and the receive chains. The number of training symbols, N_{LTF}, is equal to the number of space time streams , except that for three space time streams, four training symbols are required. Otherwise, the number of training symbols is greater than the number of space time streams if the transmitter is providing training for more space time streams (spatial mapper inputs) than the number used for the transmission of the PSDU. This happens in a sounding PPDU.

The HT long training field portion has one or two parts. The first part consists of from one to four HT long training fields (HT-LTFs) that are necessary for demodulation of the HT-Data portion of the PPDU. These HT-LTFs are referred to as Data HT-LTFs. The optional second part consists of from zero to four HT-LTFs that may be used to probe extra spatial dimensions of the multiple-input multiple-output (MIMO) channel that are not utilized by the HT-Data portion of the PPDU. These HT-LTFs are referred to as Extension HT-LTFs. If a receiver has not advertised its ability to receive Extension HT-LTFs, it may discard a frame including Extension HT-LTFs as an unknown frame type. The number of Data HT-LTFs is denoted N_{DLTF}. The number of extension HT-LTFs is denoted N_{ELTF}. The total number of HT-LTFs is $N_{LTF} = N_{DLTF} + N_{ELTF}$.

N_{LTF} shall not exceed 5. Table n70 shows the determination of the number of space time streams from the MCS and STBC HT-SIG fields. Table n71 shows the number of data HT-LTFs as a function of the number of space time streams N_{STS} and the number of extension HT-LTFs as a function of the number of extension spatial streams N_{ESS}.

Table n70 - Determining the number of space time streams

Number of Spatial Streams (from MCS) N_{SS}	STBC field	Number of space time streams N_{STS}
1	0	1
1	1	2
2	0	2
2	1	3
2	2	4
3	0	3
3	1	4
4	0	4

Copyright © 2006 IEEE. All rights reserved.
This is an unapproved IEEE Standards Draft, subject to change.

Table n71 - Number of LTFs required to probe channels

N_{STS} **or** N_{ESS}	N_{DLTF} **or** N_{ELTFs}
1	1
2	2
3	4
4	4

When Extension HT-LTFs are used, the result is referred to as a staggered preamble. When a HT packet includes one or more extension HT-LTFs, it is optional for a receiver to decode the data portion of the PPDU.

The following HT-LTF sequence is transmitted in the case of 20MHz operation:

$$HTLTF_{-28:28} = \begin{bmatrix} 1,1,1,1,-1,-1,1,1,-1,1,-1,1,1,1,1,1,1,-1,-1,1,1,-1,1,-1,1,1,1,1,0, \\ 1,-1,-1,1,1,-1,1,-1,1,-1,-1,-1,-1,-1,1,1,-1,-1,1,-1,1,-1,1,1,1,1,-1,-1 \end{bmatrix} \quad (20\text{-}15)$$

Note that this sequence is an extension of the non-HT LTF where the 4 extra sub-carriers are filled with +1 for negative frequencies and -1 for positive frequencies

In a 40MHz transmission the sequence to be transmitted is based on:

$$\begin{aligned} HTLTF_{-58,58} = \{ & 1,1,-1,-1,1,1,-1,1,-1,1,1,1,1,1,1,-1,-1,1,1,-1,1,-1,1,1,1,1,1, \\ & 1,-1,-1,1,1,-1,1,-1,1,-1,-1,-1,-1,-1,1,1,-1,-1,1,-1,1,-1,1,1,1,1,-1,-1,-1,1,0 \\ & 0,0,-1,1,1,-1,1,1,-1,-1,1,1,-1,1,-1,1,1,1,1,1,1,1,-1,-1,1,1,-1,1,-1,1,1,1,1,1, \\ & 1,-1,-1,1,1,-1,1,-1,1,-1,-1,-1,-1,-1,1,1,-1,-1,1,-1,1,-1,1,1,1,1,1\} \end{aligned} \quad (20\text{-}16)$$

Note that this sequence is also constructed by extending the non-HT LTF in the following way: first of all, the non-HT LTF is shifted and duplicated as explained in 20.3.3.2.1.3 for the duplicate non-HT mode; then the missing sub-carriers are filled: sub-carriers [-32 -5 -4 -3 -2 2 3 4 5 32] are filled with the values [1 -1 -1 -1 1 -1 1 1 -1 1] respectively.

This sequence is used even if the HT-duplicate mode (MCS 32) is used in the data.

Copyright © 2006 IEEE. All rights reserved.
This is an unapproved IEEE Standards Draft, subject to change.

In a mixed mode preamble the duration of each long training field HT-LTF is 4 μsec and it consists of a single occurrence of the sequence plus a GI insertion. In case of multiple space time streams cyclic shift is invoked as specified in Table n67

The generation of Data HT-LTFs is shown in Figure n56. The generation of Extension HT-LTFs is shown in Figure n57. In these figures, and in the following text, the following notational conventions are used:

— $[Q]_{m,n}$ indicates the element of in row m and column n of matrix Q

— $[Q]_N$ indicates a matrix consisting of the first N columns of matrix Q

— $[Q]_{M:N}$ indicates a matrix consisting of columns M through N of matrix Q

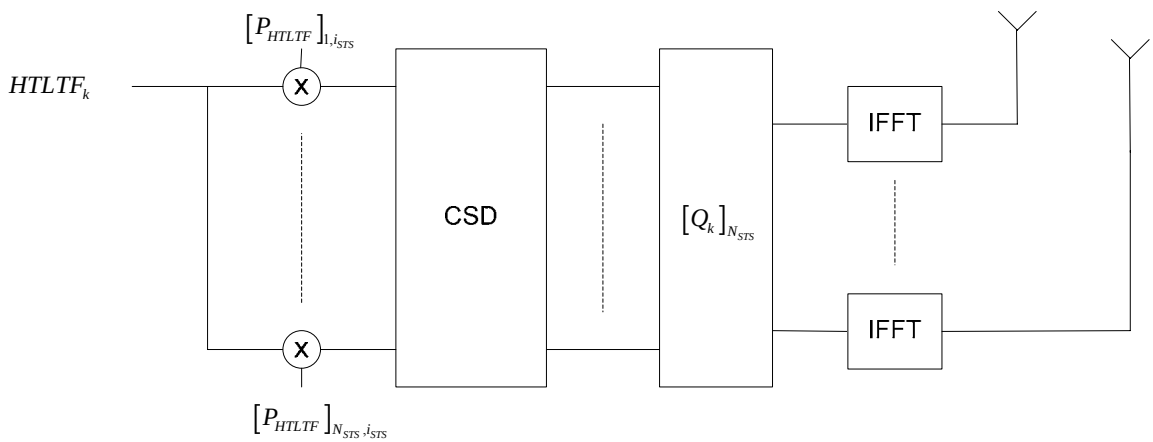

Figure n56 - Generation of datan HT-LTFs

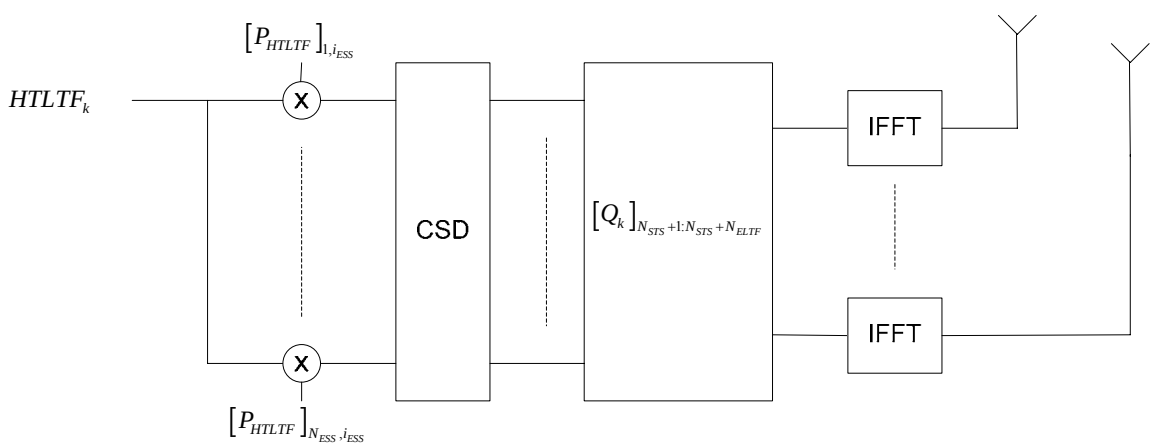

Figure n57 - Generation of the extension HT-LTFs

The mapping between space time streams and transmit chains is defined by the columns of an antenna map matrix Q_k for subcarrier k. The first N_{STS} columns define the space time streams used for data transmission, and the next N_{ESS} columns (up to $N_{TX} - N_{STS}$ columns) define the extension spatial streams. Thus, for the purpose of defining HT-LTFs, Q_k is an $N_{TX} \times N_{TX}$ dimension matrix. Columns

Copyright © 2006 IEEE. All rights reserved.
This is an unapproved IEEE Standards Draft, subject to change.

$1 \cdots N_{STS}$ of Q_k are excited by the Datan HT-LTFs and columns $N_{STS}+1 \cdots N_{STS}+N_{ESS}$ are excited by the Extension HT-LTFs, where $N_{STS}+N_{ESS} \le N_{TX}$ is the total number of spatial streams being probed by the HT-LTFs. Q_k may be an identity matrix, in the case of direct-mapped MIMO. Q_k shall not be an identity matrix when extension HT-LTFs are present ($N_{ESS} > 0$). Other limitations on Q_k are specified in 20.3.4.7.1.

The time domain representation of the waveform transmitted in the ith transmit chain during the nth datan HT-LTF ($1 \le n \le N_{DLTF}$) is:

$$r_{HT-LTF}^{n,i_{TX}}(t) = w_{T_{HT-LTFs}}(t)\sqrt{\frac{1}{N_{STS} \cdot N_{HT-LTF}^{Tone}}} \cdot \left(\sum_{k=-N_{SR}}^{0} \sum_{i_{STS}=1}^{N_{STS}} [Q_k]_{i_{TX},i_{STS}} P_{HTLTF}(i_{STS},n) HTLTF(k) \exp\left(j2\pi k \Delta_F \left(t - T_{GI} - T_{CS}^{i_{STS}} \right) \right) + \Upsilon \sum_{k=1}^{N_{SR}} \sum_{i_{STS}=1}^{N_{STS}} [Q_k]_{i_{TX},i_{STS}} P_{HTLTF}(i_{STS},n) HTLTF(k) \exp\left(j2\pi k \Delta_F \left(t - T_{GI} - T_{CS}^{i_{STS}} \right) \right) \right) \quad (20\text{-}17)$$

and for the extension HT-LTFs $\left(N_{DLTF} < n \le N_{LTF} \right)$ it is:

$$r_{HT-LTF}^{n,i_{TX}}(t) = w_{T_{HT-LTFs}}(t)\sqrt{\frac{1}{N_{HT-LTF}^{Tone} N_{ESS}}} \cdot \left(\sum_{k=-N_{SR}}^{0} \sum_{i_{ESS}=1}^{N_{ESS}} [Q_k]_{i_{TX},N_{STS}+i_{ESS}} P_{HTLTF}(i_{ESS},n-N_{DLTF}) HTLTF(k) \exp\left(j2\pi k \Delta_F \left(t - T_{GI} - T_{CS}^{i_{ESS}} \right) \right) + \Upsilon \sum_{k=1}^{N_{SR}} \sum_{i_{ESS}=1}^{N_{ESS}} [Q_k]_{i_{TX},N_{STS}+i_{ESS}} P_{HTLTF}(i_{ESS},n-N_{DLTF}) HTLTF(k) \exp\left(j2\pi k \Delta_F \left(t - T_{GI} - T_{CS}^{i_{ESS}} \right) \right) \right) \quad (20\text{-}18)$$

The HT-LTF mapping matrix P_{HTLTF} is:

$$P_{HTLTF} = \begin{pmatrix} 1 & -1 & 1 & 1 \\ 1 & 1 & -1 & 1 \\ 1 & 1 & 1 & -1 \\ -1 & 1 & 1 & 1 \end{pmatrix} \quad (20\text{-}19)$$

Where Υ is 1 for 20MHz and j in 40MHz. The values for $T_{CS}^{i_{STS}}$ are given in Table n67. Q_k is defined in 20.3.4.7.1.

Copyright © 2006 IEEE. All rights reserved.
This is an unapproved IEEE Standards Draft, subject to change.

20.3.3.3 Greenfield preamble and header fields

For Green Field operation, compatibility with clause 17 and clause 19 devices is not required. Therefore, the portions of the preamble and the header that are compatible with clause 17 and clause 19 devices are not included. The result is a shorter and more efficient PLCP frame format that includes a short training field, long training fields, and a High Throughput Signal field.

20.3.3.3.1 Cyclic shift for the Green Field preamble and header fields

Throughout the Green Field preamble and header, cyclic shift is applied to prevent beamforming when similar signals are transmitted on different spatial streams. The same cyclic shift is applied to these streams during the transmission of the data portion of the frame. The values of the cyclic shift to be used during the Green Field preamble and header, as well as the data portion of the Green Field frame, are specified in Table n67.

20.3.3.3.2 Short training field

The short training field is placed at the beginning of a Green Field frame. The time domain waveform for the short training field (STF) on transmit chain i_{TX} is

$$r_{L-STF}^{(i_{TX})}(t) = \frac{1}{\sqrt{N_{STS} \cdot N_{L-STF}^{Tone}}} w_{T_{L-STF}}(t) \cdot \left(\sum_{k=-N_{SR}}^{0} \sum_{i_{STS}=1}^{N_{STS}} [Q_k]_{i_{TX} i_{STS}} [P_{HTLTF}]_{i_{STS},1} S_k \exp\left(j 2\pi k \Delta_F \left(t - T_{CS}^{i_{STS}} \right) \right) + \Upsilon \sum_{k=1}^{N_{SR}} \sum_{i_{STS}=1}^{N_{STS}} [Q_k]_{i_{TX} i_{STS}} [P_{HTLTF}]_{i_{STS},1} S_k \exp\left(j 2\pi k \Delta_F \left(t - T_{CS}^{i_{STS}} \right) \right) \right) \quad (20\text{-}20)$$

$T_{CS}^{i_{STS}}$ takes values from Table n67. The value of Υ is 1 for 20MHz and j in 40MHz. Q_k is defined in *20.3.4.7.1* The STF has a period of 0.8 µs. The entire short training field includes ten such periods, with a total duration of T_{L-STF} = 8 µs. The sequence S_k is defined in subclause 20.3.3.2.1.2, Equation (20-5) for 20 MHz operation, and (20-6) for 40 MHz operation.

20.3.3.3.3 Signal field

The content and format of the Signal field in the header portion of a Green Field frame is identical to the High Throughput Signal field in a Mixed Mode frame, as described in 20.3.3.2.2.2. The placement of the

Copyright © 2006 IEEE. All rights reserved.
This is an unapproved IEEE Standards Draft, subject to change.

Signal field in a Green Field frame is shown in Figure n48. The time-domain waveform is generated according to the equations in the following subclauses.

20.3.3.3.3.1 Signal Field for 20 MHz operation

The following equation gives the time domain waveform for the signal field on transmit chain i_{TX} with 20 MHz operation.

$$r_{HT-SIG}^{i_{TX}}(t) = \frac{1}{\sqrt{N_{STS} \cdot N^{Tones}}} \sum_{n=0}^{1} w_{T_{SYM}}(t - nT_{SYM}) \cdot$$
$$\left(j\sum_{k=0}^{47} \sum_{i_{STS}=1}^{N_{STS}} \left[Q_{M(k)}\right]_{i_{TX},i_{STS}} \left[P_{HTLTF}\right]_{i_{STS},1} d_{k,n} \exp\left(j2\pi M(k)\Delta_F \left(t - nT_{SYM} - T_{GI} - T_{CS}^{i_{STS}}\right)\right) \right.$$
$$\left. + p_{n+z} \sum_{k=-N_{SR}}^{N_{SR}} \sum_{i_{STS}=1}^{N_{STS}} \left[Q_k\right]_{i_{TX},i_{STS}} \left[P_{HTLTF}\right]_{i_{STS},1} P_k \exp\left(j2\pi k\Delta_F \left(t - nT_{SYM} - T_{GI} - T_{CS}^{i_{STS}}\right)\right)\right)$$
(20-21)

20.3.3.3.3.2 Signal Field for 40 MHz operation

The following equation gives the time domain waveform for the signal field on transmit chain i_{TX} with 40 MHz operation.

$$r_{HT-SIG}^{i_{TX}}(t) = \frac{1}{\sqrt{N_{STS} \cdot N^{Tones}}} \sum_{n=0}^{1} w_{T_{SYM}}(t - nT_{SYM}) \cdot$$
$$\left(j\sum_{k=0}^{47} \sum_{i_{STS}=1}^{N_{STS}} \left[Q_{M(k)-32}\right]_{i_{TX},i_{STS}} \left[P_{HTLTF}\right]_{i_{STS},1} d_{k,n} \exp\left(j2\pi\left(M(k)-32\right)\Delta_F \left(t - nT_{SYM} - T_{GI} - T_{CS}^{i_{STS}}\right)\right) \right.$$
$$-\sum_{k=0}^{47} \sum_{i_{STS}=1}^{N_{STS}} \left[Q_{M(k)+32}\right]_{i_{TX},i_{STS}} \left[P_{HTLTF}\right]_{i_{STS},1} d_{k,n} \exp\left(j2\pi\left(M(k)+32\right)\Delta_F \left(t - nT_{SYM} - T_{GI} - T_{CS}^{i_{STS}}\right)\right)$$
$$+ p_{n+z} \sum_{k=-N_{SR}}^{N_{SR}} \sum_{i_{STS}=1}^{N_{STS}} \left[Q_{k-32}\right]_{i_{TX},i_{STS}} \left[P_{HTLTF}\right]_{i_{STS},1} P_k \exp\left(j2\pi(k-32)\Delta_F \left(t - nT_{SYM} - T_{GI} - T_{CS}^{i_{STS}}\right)\right)$$
$$\left. + jp_{n+z} \sum_{k=-N_{SR}}^{N_{SR}} \sum_{i_{STS}=1}^{N_{STS}} \left[Q_{k+32}\right]_{i_{TX},i_{STS}} \left[P_{HTLTF}\right]_{i_{STS},1} P_k \exp\left(j2\pi(k+32)\Delta_F \left(t - nT_{SYM} - T_{GI} - T_{CS}^{i_{STS}}\right)\right)\right)$$
(20-22)

Copyright © 2006 IEEE. All rights reserved.
This is an unapproved IEEE Standards Draft, subject to change.

20.3.3.3.4 Long training field

The format of the long training field portion of the preamble in a Green Field frame is identical to that of the High Throughput long training field in a Mixed Mode frame, as described in 20.3.3.2.2.4, with the exception of the first HT-LTF, which is twice as long (8 μs) as the other HT-LTFs. The time domain waveform on transmit chain for the first HT-LTF in a Green Field frame is

$$r_{HT-LTF}^{1,i_{TX}}(t) = w_{T_{HT-LTF1}}(t)\sqrt{\frac{1}{N_{STS}\cdot N_{HT-LTF}^{Tone}}}\cdot$$
$$\left(\sum_{k=-N_{SR}}^{0}\sum_{i_{STS}=1}^{N_{STS}}\left[Q_k\right]_{i_{TX},i_{STS}} P_{HTLTF}\left(i_{STS},1\right) HTLTF\left(k\right)\exp\left(j2\pi k\Delta_F\left(t-T_{GI2}-T_{CS}^{i_{STS}}\right)\right)+\right.$$
$$\left.\Upsilon\sum_{k=1}^{N_{SR}}\sum_{i_{STS}=1}^{N_{STS}}\left[Q_k\right]_{i_{TX},i_{STS}} P_{HTLTF}\left(i_{STS},1\right) HTLTF\left(k\right)\exp\left(j2\pi k\Delta_F\left(t-T_{GI2}-T_{CS}^{i_{STS}}\right)\right)\right) \quad (20\text{-}23)$$

The placement of the first and subsequent HT-LTFs in a Green Field frame is shown in Figure n48.

20.3.4 The Data Field

The data field includes the service field, the PSDU, the pad bits, and the tail bits.

The number of symbols in the data field when BCC encoding is used is computed using the formula:

$$N_{SYM} = m_{STBC}\left\lceil\frac{8\cdot length+16+6\cdot N_{ES}}{m_{STBC}\cdot N_{DBPS}}\right\rceil \quad (20\text{-}24)$$

where

m_{STBC} is 2 if STBC is used and 1 otherwise (making sure that the number of symbols is even when STBC is used.)

length is the value of the Length field in the HT-SIG field defined in Table n68.

The number of "zero" pad bits is thus $N_{SYM} \cdot N_{DBPS} - 8 \cdot \text{length} - 16 - 6 \cdot N_{ES}$. The number of symbols in the data field when LDPCC encoding is used is described in 20.3.4.3.3.

20.3.4.1 The service field

The service field is used for scrambler initialization. The service field will be composed of 16 bits, all set to zero before scrambling. In non-HT and non-HT duplicate transmission the service field will be the same as in 17.3.5.1. In HT modes, the service field is composed of 16 zeros bits, scrambled by the scrambler, as defined in the next subclause.

20.3.4.2 Scrambler

Copyright © 2006 IEEE. All rights reserved.
This is an unapproved IEEE Standards Draft, subject to change.

The data field is scrambled by the scrambler defined in 17.3.5.4.

20.3.4.3 Coding

The data are encoded using the convolutional encoder defined in 17.3.5.5. A single FEC encoder is used when the PHY rate is less than or equal 300Mbps or when LDPCC ECC is used; When BCC FEC encoder is used, two encoders will be used when the PHY rate is greater than 300Mbps. The operation of the BCC FEC is described in 20.3.4.3.1 and 20.3.4.3.2. The operation of the LDPCC ECC is described in 20.3.4.3.3.

20.3.4.3.1 Encoder Parsing operation

If two encoders are used, the scrambled data bits are divided between the encoders by sending alternating bits to different encoders. The ith bit to the jth encoder, denoted $x_i^{(j)}$, is:

$$x_i^{(j)} = b_{N_{ES} \cdot i + j} \quad ; \quad 0 \le j \le N_{ES} - 1 \tag{20-25}$$

Following the parsing operation, 6 scrambled "zero" bits following the end of the message bits in each FEC input sequence are replaced by unscrambled "zero" bits, as described in 17.3.5.2.

The replaced bits are:

$$x_i^{(j)} \quad : \qquad 0 \le j \le N_{ES} - 1 \quad ; \quad \frac{length \cdot 8 + 16}{N_{ES}} \le i \le \frac{length \cdot 8 + 16}{N_{ES}} + 5 \tag{20-26}$$

20.3.4.3.2 Coding and puncturing

The encoder parser output sequences $\{x_i^0\}$ and $\{x_i^1\}$ where applicable will each be encoded by a rate ½ convolutional encoder defined in 17.3.5.5. After encoding, the encoded data will be punctured by the method defined in 17.3.5.6 to achieve the rate selected by the modulation and coding scheme.

In the case that rate 5/6 coding is selected, the puncturing scheme is as follows:

Copyright © 2006 IEEE. All rights reserved.
This is an unapproved IEEE Standards Draft, subject to change.

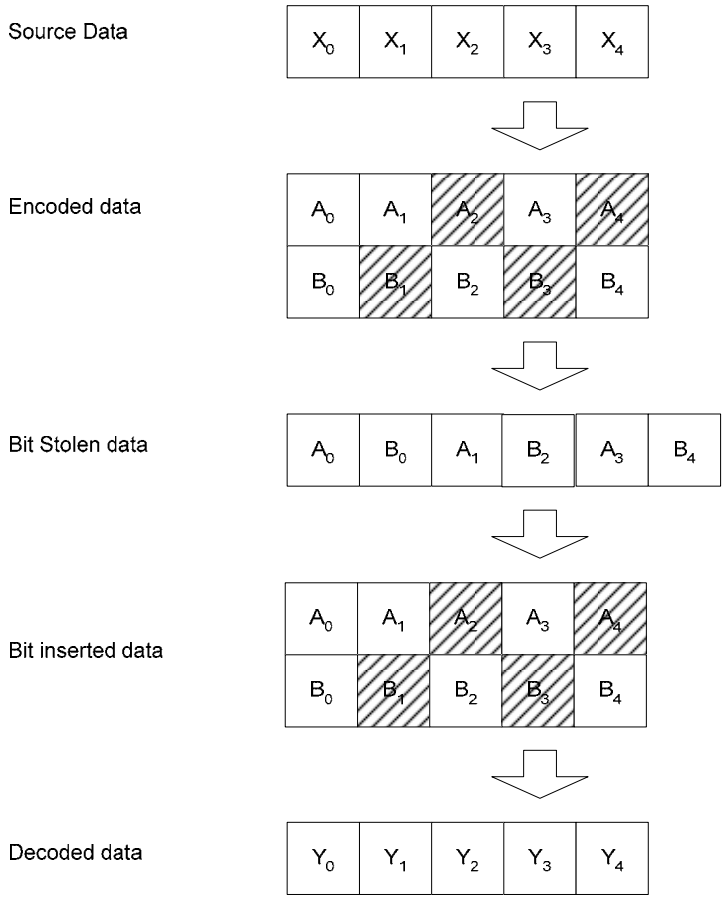

Figure n58 - Puncturing at rate 5/6

20.3.4.3.3 Low density parity check codes (optional ECC)

This subclause describes the LDPCCs to be optionally used in the HT system as a high-performance ECC technique, instead of the convolutional code (20.3.4.3.2). The rate-dependent parameters in Table n87 through Table n102 in shall still apply.

20.3.4.3.3.1 LDPCC Code Rates and Codeword Block Lengths

The supported code rates, information block lengths, and codeword block lengths are described in Table n72.

Copyright © 2006 IEEE. All rights reserved.
This is an unapproved IEEE Standards Draft, subject to change.

Table n72 - LDPCC Parameters

Code rate (R)	LDPC information block length (bits)	LDPC codeword block length (bits)
1/2	972	1944
1/2	648	1296
1/2	324	648
2/3	1296	1944
2/3	864	1296
2/3	432	648
3/4	1458	1944
3/4	972	1296
3/4	486	648
5/6	1620	1944
5/6	1080	1296
5/6	540	648

20.3.4.3.3.2 LDPCC Encoder

For each of the three available codeword block lengths, the proposed LDPCC supports rate-1/2, rate-2/3, rate-3/4 and rate-5/6 encoding. The LDPCC encoder is systematic, i.e. it encodes an information block of size k, I=(i_0,i_1,..., $i_{(k-1)}$) into a codeword **c** of size n, **c**=(i_0,i_1,... $i_{(k-1)}$, p_0, p_1,…, $p_{(n-k-1)}$), by adding n-k parity bits obtained so that $\mathbf{H}\cdot\mathbf{c}^T = \mathbf{0}$, where **H** is an ($n$-$k$)×$n$ parity-check matrix. The selection of the codeword blocklength (n) is achieved via the LDPC PPDU encoding process described in subclause 20.3.4.3.3.4.

20.3.4.3.3.3 Parity check matrices

Each of the proposed parity-check matrices can be partitioned into square subblocks (submatrices) of size Z × Z. These submatrices are either cyclic-permutations of the identity matrix or null submatrices.

The cyclic-permutation matrix P_i is obtained from the Z × Z identity matrix by cyclically shifting the columns to the right by i elements. The matrix P_0 is the Z × Z identity matrix. Figure n59 illustrates examples (for a subblock size of 8 × 8) of cyclic-permutation matrices P_i.

Copyright © 2006 IEEE. All rights reserved.
This is an unapproved IEEE Standards Draft, subject to change.

$$P_0 = \begin{bmatrix} 1&0&0&0&0&0&0&0 \\ 0&1&0&0&0&0&0&0 \\ 0&0&1&0&0&0&0&0 \\ 0&0&0&1&0&0&0&0 \\ 0&0&0&0&1&0&0&0 \\ 0&0&0&0&0&1&0&0 \\ 0&0&0&0&0&0&1&0 \\ 0&0&0&0&0&0&0&1 \end{bmatrix}, P_1 = \begin{bmatrix} 0&1&0&0&0&0&0&0 \\ 0&0&1&0&0&0&0&0 \\ 0&0&0&1&0&0&0&0 \\ 0&0&0&0&1&0&0&0 \\ 0&0&0&0&0&1&0&0 \\ 0&0&0&0&0&0&1&0 \\ 0&0&0&0&0&0&0&1 \\ 1&0&0&0&0&0&0&0 \end{bmatrix}, P_5 = \begin{bmatrix} 0&0&0&0&0&1&0&0 \\ 0&0&0&0&0&0&1&0 \\ 0&0&0&0&0&0&0&1 \\ 1&0&0&0&0&0&0&0 \\ 0&1&0&0&0&0&0&0 \\ 0&0&1&0&0&0&0&0 \\ 0&0&0&1&0&0&0&0 \\ 0&0&0&0&1&0&0&0 \end{bmatrix} \quad (20\text{-}27)$$

Figure n59 - Examples of cyclic-permutation matrices with Z=8. The matrix P_i is produced by cyclically shifting the columns of the identity matrix to the right by *i* places.

Table n103 of Annex P displays the "matrix prototypes" of parity-check matrices for all four code rates at block length n=648 bits. The integer i denotes the cyclic-permutation matrix Pi, as illustrated in Figure n59. Vacant entries of the table denote null (zero) submatrices.

Table n104 of Annex P displays the matrix prototypes of parity-check matrices for blocklength n=1296 bits, in the same fashion.

Table n105 of Annex P displays the matrix prototypes of parity-check matrices for blocklength n=1944 bits, in the same fashion.

20.3.4.3.3.4 LDPCC PPDU encoding process

To encode an LDPCC PPDU, steps a) to g) defined below are performed in sequence.

a) Compute the number of available bits in the minimum number of OFDM symbols in which the Data field of the packet may fit.

$$N_{\text{pld}} = \mathit{length} \times 8 + 16 \quad (20\text{-}28)$$

$$N_{\text{avbits}} = N_{\text{CBPS}} \times \left(1 + U_{\text{STBC}}\right) \times \text{ceil}\left(\frac{N_{\text{pld}}}{N_{\text{CBPS}} \times \text{R} \times \left(1 + U_{\text{STBC}}\right)}\right), \quad (20\text{-}29)$$

where

U_{STBC} is 1 when STBC is used and 0 otherwise

length is the value of the Length field in the HT-SIG field defined in Table n68.

b) Compute the integer number of LDPCC codewords to be transmitted, N_{CW}, and the length of the codewords to be used, L_{LDPC} from Table n73.

Copyright © 2006 IEEE. All rights reserved.
This is an unapproved IEEE Standards Draft, subject to change.

Table n73 - PPDU Encoding Parameters

N_{avbits} Range (bits)	Number of LDPCC codewords N_{CW}	LDPC codeword length L_{LDPC} (bits)
$N_{avbits} \leq 648$	1	1296, if $N_{avbits} \geq N_{pld} + 912 \times (1-R)$ 648, otherwise
$648 < N_{avbits} \leq 1296$	1	1944, if $N_{avbits} \geq N_{pld} + 1464 \times (1-R)$ 1296, otherwise
$1296 < N_{avbits} \leq 1944$	1	1944
$1944 < N_{avbits} \leq 2592$	2	1944, if $N_{avbits} \geq N_{pld} + 2916 \times (1-R)$ 1296, otherwise
$2592 < N_{avbits}$	ceil(N_{pld} / (1944 × R))	1944

c) Compute the number of shortening bits to be padded to the N_{pld} data bits before encoding

$$N_{shrt} = (N_{CW} \times L_{LDPC} \times R) - N_{pld} \tag{20-30}$$

The shortening bits shall be equally distributed over all N_{CW} codewords with the first $\mathrm{rem}(N_{shrt}, N_{CW})$ codewords being shortened one bit more than the remaining codewords. All shortened bits shall be set to 0 on the right of the data bits in the systematic portion of the codeword corresponding to their locations in the parity check matrix. These shortened bits shall be discarded after encoding.

d) Compute the number of bits to be punctured from the codewords after encoding

$$N_{punc} = \max(0, (N_{CW} \times L_{LDPC}) - N_{avbits} - N_{shrt}) \tag{20-31}$$

If $\left(\left(N_{punc} > 0.1 \times N_{CW} \times L_{LDPC} \times (1-R)\right) \text{ AND } \left(N_{shrt} < 1.2 \times N_{punc} \times R/(1-R)\right)\right)$ is true OR if $\left(N_{punc} > 0.3 \times N_{CW} \times L_{LDPC} \times (1-R)\right)$ is true, then increment N_{avbits} and recompute N_{punc} by the following:

$$N_{avbits} = N_{avbits} + N_{CBPS} \times (1+U_{STBC}) \tag{20-32}$$

$$N_{punc} = \max(0, (N_{CW} \times L_{LDPC}) - N_{avbits} - N_{shrt}) \tag{20-33}$$

The punctured bits shall be equally distributed over all N_{CW} codewords with the first $\mathrm{rem}(N_{punc}, N_{CW})$ codewords being punctured one bit more than the remaining codewords. These punctured bits shall be the right most parity portion of the codeword corresponding to their locations in the parity check matrix and shall be discarded after encoding. The number of OFDM symbols to be transmitted in the PPDU can be computed per:

Copyright © 2006 IEEE. All rights reserved.
This is an unapproved IEEE Standards Draft, subject to change.

$$N_{\mathrm{SYM}} = N_{\mathrm{avbits}} / N_{\mathrm{CBPS}} \tag{20-34}$$

e) Compute the number of coded bits to be repeated

$$N_{\mathrm{rep}} = \max(0, N_{\mathrm{avbits}} - N_{\mathrm{CW}} \times L_{\mathrm{LDPC}} \times (1 - R) - N_{\mathrm{pld}}) \tag{20-35}$$

The number of coded bits to be repeated shall be equally distributed over all N_{CW} codewords with one more bit repeated for the first $\mathrm{rem}(N_{\mathrm{rep}}, N_{\mathrm{CW}})$ codewords than for the remaining codewords. Note when puncturing occurs that coded bits are not repeated and vice versa. The coded bits to be repeated per codeword shall be copied (cyclically repeated when necessary) starting from the left most systematic data bits, continuing through the parity bits if necessary, all corresponding to their locations in the parity check matrix. These repeated bits are then concatenated to the codeword after the parity bits in their same order.

Figure n60 - LDPCC PPDU encoding padding and puncturing of a single codeword

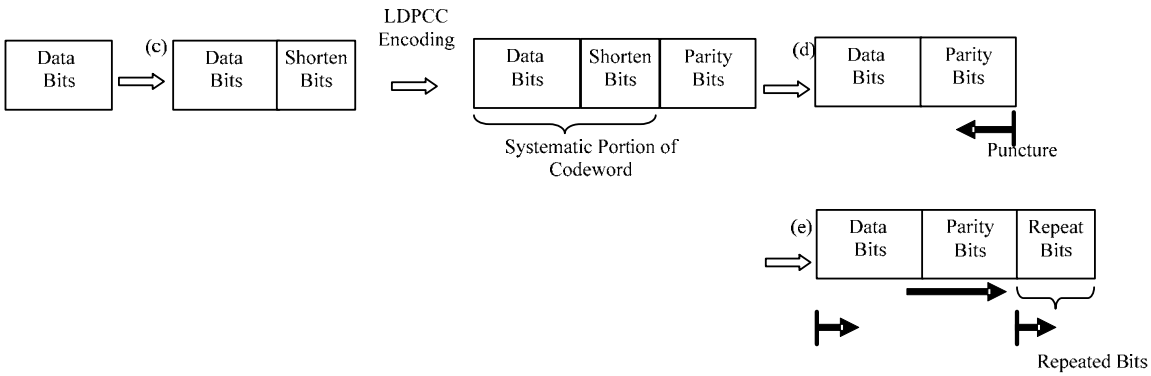

f) Encode the data per 20.3.4.3.3.2 and 20.3.4.3.3.3, using the number of shortening bits per codeword as computed in step c), and puncture or repeat bits per codeword as computed per step d) and e).

g) Aggregate all codewords and parse per 20.3.4.3.3.5.

20.3.4.3.3.5 LDPC Parser

The LDPC shortened and punctured codewords that result from the encoding process shall be outputted in sequential fashion starting from the i_0th bit of the systematic portion of each encoded codeword outputted first. The parsing of this encoded data stream into spatial streams shall follow exactly the parsing rules defined for the BCC encoder, as defined in clause 20.3.4.3.1 .

20.3.4.4 Data Interleaver

20.3.4.4.1 Overview

After coding and puncturing, the data bit stream at the output of the FEC encoders are re-arranged into blocks of N_{CBPSS} bits. This operation is referred to as "stream parsing" and is described in 20.3.4.4.2

Copyright © 2006 IEEE. All rights reserved.
This is an unapproved IEEE Standards Draft, subject to change.

below. Each of these blocks is then interleaved by an interleaver that is a modification of the clause 17 interleaver.

20.3.4.4.2 Stream Parser

The number of bits assigned to a single axis (real or imaginary) in a constellation point in spatial stream i_{SS} is denoted by

$$s\left(i_{SS}\right) = \max\left\{1, \frac{N_{BPSC}\left(i_{SS}\right)}{2}\right\} \tag{20-36}$$

The sum of these over all streams is: $S = \sum_{i_{SS}=0}^{N_{SS}-1} s\left(i_{SS}\right)$.

NOTE—if equal MCS is used for all spatial streams this becomes $N_{SS} \cdot s$, where s is number of bits for an axis common to all streams.

Consecutive blocks of $s\left(i_{SS}\right)$ bits are assigned to different spatial streams in a round robin fashion.

If two encoders are present, the output of each encoder is used alternately for each round robin cycle, i.e. at the beginning S bits from the output of first encoder are fed into all spatial streams, and then S bits from the output of second encoder are used and so on.

The kth input to the $i_{SS}{}^{th}$ spatial stream is $y_i^{(j)}$, which is the ith output bit of the jth encoder, where:

$$j = \left\lfloor \frac{k}{s\left(i_{SS}\right)} \right\rfloor \oplus N_{ES} \tag{20-37}$$

and

$$i = \sum_{i'=0}^{i_{SS}-1} s\left(i'\right) + S \cdot \left\lfloor \frac{k}{N_{ES} \cdot s\left(i_{SS}\right)} \right\rfloor + k \oplus s\left(i_{SS}\right) \tag{20-38}$$

20.3.4.4.3 Frequency interleaver

The bits at the output of the stream parser are divided into block of N_{CBPSS}, each block is interleaved by an interleaver based on the clause 17 interleaver. This interleaver, which is based on entering the data in rows, and reading it out in columns, has a different number of columns and rows when a 20MHz channel is used and when a 40MHz channel is used. The numbers are described in the table below:

Copyright © 2006 IEEE. All rights reserved.
This is an unapproved IEEE Standards Draft, subject to change.

Table n74 - Number of rows and columns in the interleaver

Parameter	20MHz	40MHz
N_{COL}	13	18
N_{ROW}	$4N_{BPSC}$	$6N_{BPSC}$
N_{ROT}	11	29

After the .11a like operations have been applied, if more than one spatial stream exists, a third operation called frequency rotation is applied to the additional spatial streams. The parameter for the frequency rotation is N_{ROT}.

An additional parameter is the spatial stream index i_{ss}=0,..,N_{SS}-1. The output of the third permutation is a function of the spatial stream index.

The interleaving is defined using three permutations. The first permutation is defined by the rule:

$$i = N_{ROW}\left(k \bmod N_{\mathrm{COL}}\right) + \mathrm{floor}\left(k / N_{\mathrm{COL}}\right) \qquad k = 0,1,\ldots,N_{\mathrm{CBPSS}} - 1 \tag{20-39}$$

The second permutation is defined by the rule

$$j = s \times \mathrm{floor}\left(i / s\right) + \left(i + N_{\mathrm{CBPSS}} - \mathrm{floor}\left(N_{\mathrm{COL}} \times i / N_{\mathrm{CBPSS}}\right)\right) \bmod s \qquad i = 0,1,\ldots,N_{\mathrm{CBPSS}} - 1 \tag{20-40}$$

The value of s is determined by the number of coded bits per sub carrier:

$$s = \max\left(N_{\mathrm{BPSC}} / 2, 1\right) \tag{20-41}$$

If more that one spatial stream exists, a frequency rotation is applied to the output of the second permutation

$$r = \left(j - \left(\left(i_{ss} \times 2\right) \bmod 3 + 3 \times \mathrm{floor}\left({}^{i_{ss}}\!/_{3} \right) \right) \times N_{ROT} \times N_{BPSC} \right) \bmod N_{CBPSS} \qquad j = 0,1,\ldots,N_{\mathrm{CBPSS}} - 1 \tag{20-42}$$

where

$i_{ss} = 0,1,\ldots,N_{ss} - 1$ is the index of the spatial stream on which this interleaver is operating.

Copyright © 2006 IEEE. All rights reserved.
This is an unapproved IEEE Standards Draft, subject to change.

The deinterleaver uses the following operations to perform the inverse rotation. We denote by *r* the index of the bit in the received block (per spatial stream). The first permutation reverses the third (frequency rotation) permutation of the interleaver

$$j = \left(r + \left(\left(i_{ss} \times 2 \right) \bmod 3 + 3 \times \mathrm{floor}\left({}^{i_{ss}}\!/_{3} \right) \right) \times N_{ROT} \times N_{BPSC} \right) \bmod N_{CBPSS} \qquad r = 0,1,\ldots,N_{\mathrm{CBPSS}} - 1 \tag{20-43}$$

The second permutation reverses the second permutation in the interleaver.

$$i = s \times \mathrm{floor}\left(j / s \right) + \left(j + \mathrm{floor}\left(N_{COL} \times j / N_{\mathrm{CBPSS}} \right) \right) \bmod s \qquad j = 0,1,\ldots,N_{\mathrm{CBPSS}} - 1 \tag{20-44}$$

where

s is defined in Equation (20-41).

The third permutation reversed the first permutation of the interleaver:

$$k = N_{COL} \times i - \left(N_{CBPSS} - 1 \right) \times \mathrm{floor}\left(i / N_{ROW} \right) \qquad i = 0,1,\ldots,N_{CBPSS} - 1 \tag{20-45}$$

20.3.4.5 QAM Mapping

The mapping between bits at the output of the interleaver and complex constellation points for BPSK, QPSK, 16-QAM and 64-QAM follows exactly the rules defined in 17.3.5.7

The streams of complex numbers are denoted:

$$d_{k,l,n},\ k = 0,1,\ldots,N_{\mathrm{SD}} - 1,\ l = 1,\ldots,N_{\mathrm{SS}},\ n = 0,1,\ldots,N_{\mathrm{SYM}} - 1 \tag{20-46}$$

20.3.4.5.1 Space-Time-Block-Coding (STBC)

This subclause defines a set of optional robust transmission rates that are applicable only when N_{STS} is greater than N_{SS}. N_{SS} spatial streams are mapped to N_{STS} space time streams, which are mapped to N_{TX} transmit chains. These rates are based either on Space-Time Block Coding (STBC) or hybrid STBC / Spatial- Multiplexing (SM) schemes. When the use of STBC is indicated in HT-SIG STBC field, a symbol operation shall occur between the QAM mapper and the spatial mapper (see Figure n50) as defined in this clause.

Denote the complex modulator symbol transmitted on data subcarrier k of OFDM symbols $2n$ and $2n+1$ in spatial stream ℓ as $d_{k,\ell,2n}$ and $d_{k,\ell,2n}$, respectively where $n \in \{0,1,\ldots\}$.

Copyright © 2006 IEEE. All rights reserved.
This is an unapproved IEEE Standards Draft, subject to change.

Table n75 indicates, for each combination of N_{STS} and N_{SS}, which modulator symbol shall be transmitted during OFDM symbol period (2*n*) and (2*n*+1) from space time stream $i_{\mathrm{STS}} \in \{1,..,N_{\mathrm{STS}}\}$.

Table n75 - QAM mapper output to spatial Mapper input for STBC

N_{STS}	**Bits 0-6 in HT SIG1 (MCS index)**	N_{SS}	**Bits 4–5 in HT SIG2 (STBC index)**	i_{STS}	**space time stream in OFDM symbol (2*n*)**	**space time stream in OFDM symbol (2*n*+1)**
2	0-7, 32	1	1	1	$d_{k,1,2n}$	$d_{k,1,2n+1}$
				2	$-d^*_{k,1,2n+1}$	$d^*_{k,1,2n}$
3	8-15, 33-38	2	1	1	$d_{k,1,2n}$	$d_{k,1,2n+1}$
				2	$-d^*_{k,1,2n+1}$	$d^*_{k,1,2n}$
				3	$d_{k,2,2n}$	$d_{k,2,2n+1}$
4	8-15	2	2	1	$d_{k,1,2n}$	$d_{k,1,2n+1}$
				2	$-d^*_{k,1,2n+1}$	$d^*_{k,1,2n}$
				3	$d_{k,2,2n}$	$d_{k,2,2n+1}$
				4	$-d^*_{k,2,2n+1}$	$d^*_{k,2,2n}$
4	16-23, 39, 41, 43, 46, 48, 50	3	1	1	$d_{k,1,2n}$	$d_{k,1,2n+1}$
				2	$-d^*_{k,1,2n+1}$	$d^*_{k,1,2n}$
				3	$d_{k,2,2n}$	$d_{k,2,2n+1}$
				4	$d_{k,3,2n}$	$d_{k,3,2n+1}$

In the following description, the complex-valued modulation symbol at the output of the STBC encoder, as given in Table n75, in data subcarrier k of OFDM symbol n of space time stream ℓ is denoted $\tilde{d}_{k,\ell,n}$. If space time block coding is not applied, then $\tilde{d}_{k,\ell,n} = d_{k,\ell,n}$, and $N_{SS} = N_{STS}$.

Note that the specific STBC schemes for single spatial streams $N_{SS} = 1$ with $N_{TX} = 3$ or $N_{TX} = 4$ are not detailed in this subclause since they are covered through the use of spatial expansion as detailed in 20.3.4.7.1.

20.3.4.6 Pilot Subcarriers

In the case of 20MHz 4 pilot tones are inserted, pilot signals are inserted in the same sub-carriers used in clause 17, i.e. in sub-carriers -21, -7, 7 and 21; the pilot sequence for the nth symbols and $i_{STS}{}^{th}$ space time stream is defined as follows:

Copyright © 2006 IEEE. All rights reserved.
This is an unapproved IEEE Standards Draft, subject to change.

$$P_{(i_{STS},n)}^{-28,28} = \{0,0,0,0,0,0,0,\Psi_{i_{STS},n\oplus 4}^{(N_{STS})},0,0,0,0,0,0,0,0,0,0,0,0,0,0,\Psi_{i_{STS},(n+1)\oplus 4}^{(N_{STSI})},0,0,0,0,0,0,0,$$
$$0,0,0,0,0,0,\Psi_{i_{STS},(n+2)\oplus 4}^{(N_{STS})},0,0,0,0,0,0,0,0,0,0,0,0,0,0,\Psi_{i_{STS},(n+3)\oplus 4}^{(N_{STS})},0,0,0,0,0,0,0\} \quad (20\text{-}47)$$

In the case of 40MHz transmission pilot signals are inserted in sub-carriers -53, -25, -11, 11, 25, 53; the pilot sequence for the nth symbols and i_{STS}^{th} space time stream is defined as follows:

$$P_{i_{STS}}^{(-58..58,n)} = \{0,0,0,0,0,\Psi_{i_{STS},n\oplus 6}^{(N_{STS})},0,0,0,0,0,0,0,0,0,0,0,0,0,0,0,0,0,0,0,0,0,0,0,0,0,0,0,0,0,0,0,0,0,0,0,$$
$$\Psi_{i_{STS},(n+1)\oplus 6}^{(N_{STS})},0,0,0,0,0,0,0,0,0,0,0,0,0,0,\Psi_{i_{STS},(n+2)\oplus 6}^{(N_{STS})},0,0,0,0,0,0,0,0,0,0,0,0,0,0,0,0,0,0,0,0,0,0,0,0,$$
$$0,\Psi_{i_{STS},(n+3)\oplus 6}^{(N_{STS})},0,0,0,0,0,0,0,0,0,0,0,0,0,0,\Psi_{i_{STS},(n+4)\oplus 6}^{(N_{STS})},0,0,0,0,0,0,0,0,0,0,0,0,0,0,0,0,0,0,0,0,0,$$
$$0,0,0,0,0,0,0,0,0,0,\Psi_{i_{STS},(n+5)\oplus 6}^{(N_{STS})},0,0,0,0,0\} \quad (20\text{-}48)$$

where

$n \oplus 4$ indicates symbol number modulo 4;

Note that for each space time stream there is a different pilot pattern and the pilot patterns are cyclically rotated over symbols.

The basic patterns are also different according to the total number of space time streams for the packet.

The patterns $\Psi_{i_{STS},n}^{(N_{STS})}$ are defined in the following tables The first table (Table n76) defines the values for 20MHz transmission and the second table (Table n77) defines the values for 40MHz transmission.

Table n76 - pilot values for 20MHz transmission

N_{STS}	i_{STS}	$\Psi_{i_{STS},0}^{(N_{STS})}$	$\Psi_{i_{STS},1}^{(N_{STS})}$	$\Psi_{i_{STS},2}^{(N_{STS})}$	$\Psi_{i_{STS},3}^{(N_{STS})}$
1	0	1	1	1	-1
2	0	1	1	-1	-1
2	1	1	-1	-1	1
3	0	1	1	-1	-1
3	1	1	-1	1	-1
3	2	-1	1	1	-1
4	0	1	1	1	-1
4	1	1	1	-1	1
4	2	1	-1	1	1

Copyright © 2006 IEEE. All rights reserved.
This is an unapproved IEEE Standards Draft, subject to change.

4	3	-1	1	1	1

Table n77 - Pilots values for 40MHz transmission

N_{STS}	i_{STS}	$\Psi^{(N_{STS})}_{i_{STS},0}$	$\Psi^{(N_{STS})}_{i_{STS},1}$	$\Psi^{(N_{STS})}_{i_{STS},2}$	$\Psi^{(N_{STS})}_{i_{STS},3}$	$\Psi^{(N_{STS})}_{i_{STS},4}$	$\Psi^{(N_{STS})}_{i_{STS},5}$
1	0	1	1	1	-1	-1	1
2	0	1	1	-1	-1	-1	-1
2	1	1	1	1	-1	1	1
3	0	1	1	-1	-1	-1	-1
3	1	1	1	1	-1	1	1
3	2	1	-1	1	-1	-1	1
4	0	1	1	-1	-1	-1	-1
4	1	1	1	1	-1	1	1
4	2	1	-1	1	-1	-1	1
4	3	-1	1	1	1	-1	1

In the duplicate mode there are 8 pilots in the bins -53, -39, -25, -11, 11, 25, 39, 53.

The pilot values are the same as the values on bins -21, -7, 7, 21 in the 20MHz mode, repeated on the negative and positive bins and rotated in the upper bins.

20.3.4.7 OFDM Modulation

The time domain signal is composed from the stream of complex numbers

$$\tilde{d}_{k,l,n},\ k = 0,1,\ldots,N_{\mathrm{SD}}-1,\ l = 1,\ldots,N_{\mathrm{STS}},\ n = 0,1,\ldots,N_{\mathrm{SYM}}-1 \qquad (20\text{-}49)$$

and from the pilot signals. In the case of 40MHz transmission the upper sub-carriers are rotated 90° relative to the lower subcarriers

20.3.4.7.1 Spatial Mapping

The transmitter may choose to rotate and/or scale the space time block coder output vector (or the QAM mapper output vector if no space time block coding was applied). This is useful in the following cases:

— There are more transmit chains than space time streams. $N_{STS} < N_{TX}$

— As part of (an optional) sounding packet.

Copyright © 2006 IEEE. All rights reserved.
This is an unapproved IEEE Standards Draft, subject to change.

— As part of (an optional) calibration procedure

— When the packet is in (an optional) beamforming mode.

If the data to be transmitted on subcarrier k on space time stream i_{STS} is $X_k^{i_{STS}}$ then the transmitted data on the i_{TX} 'th transmit chain shall be.

$$r_{Field}^{(i_{TX})}(t) = \frac{1}{\sqrt{N_{STS} \cdot N_{Field}^{Tone}}} w_{T_{Field}}(t) \sum_k \sum_{i_{STS}=1}^{N_{STS}} [Q_k]_{i_{TX} i_{STS}} X_k^{(i_{STS})} \exp\left(j 2\pi k \Delta_F \left(t - T_{CS}^{i_{STS}} \right) \right) \tag{20-50}$$

where

$[Q_k]_{i_{TX}, i_{STS}}$ is the element in the i_{TX} 'th row and i_{STS} 'th column in a matrix Q_k with N_{TX} rows and N_{STS} columns. Q_k may be frequency dependent.

There are several typical matrices that can be used:

a) Direct mapping – in this case Q_k is a diagonal matrix of unit magnitude complex values that can take two forms:

1) $Q_k = \mathbf{I}$, the identity matrix

2) A CSD matrix in which the diagonal elements represent cyclic shift in the time domain: $[Q_k]_{i,i} = \exp(-j2\pi k \Delta_F \tau_{CS}^i)$

b) Spatial Expansion – In this case Q_k is the product of a CSD matrix and a square matrix formed of orthogonal columns. As an illustration:

1) Q_k may be the product of a CSD matrix and a square unitary matrix such as the Hadamard matrix or the Fourier matrix. Sounding PPDUs using spatial expansion shall use unitary Q_k.

2) the spatial expansion may be performed by duplicating some of the N_{STS} streams to form the N_{TX} streams, each stream being scaled by the normalization factor $\sqrt{\frac{N_{STS}}{N_{TX}}}$ by using for instance one of the following matrices, denoted D, multiplied by a CSD matrix, denoted $M_{CSD}(k)$, and possibly by any square unitary matrix. The resulting spatial mapping matrix is then $Q_k = M_{CSD}(k) \bullet D$:

i) N_{TX}=2, N_{STS}=1 $D = \frac{1}{\sqrt{2}} \begin{bmatrix} 1 & 1 \end{bmatrix}^T$

ii) N_{TX}=3, N_{STS}=1 $D = \frac{1}{\sqrt{3}} \begin{bmatrix} 1 & 1 & 1 \end{bmatrix}^T$

Copyright © 2006 IEEE. All rights reserved.
This is an unapproved IEEE Standards Draft, subject to change.

iii) N_{TX}=4, N_{STS}=1 $D = \frac{1}{2}\begin{bmatrix}1 & 1 & 1 & 1\end{bmatrix}^T$

iv) N_{TX}=3, N_{STS}=2 $D = \sqrt{\frac{2}{3}}\begin{bmatrix}1 & 0\\ 0 & 1\\ 1 & 0\end{bmatrix}$

v) N_{TX}=4, N_{STS}=2 $D = \frac{1}{\sqrt{2}}\begin{bmatrix}1 & 0\\ 0 & 1\\ 1 & 0\\ 0 & 1\end{bmatrix}$

vi) N_{TX}=4, N_{STS}=3 $D = \frac{\sqrt{3}}{2}\begin{bmatrix}1 & 0 & 0\\ 0 & 1 & 0\\ 0 & 0 & 1\\ 1 & 0 & 0\end{bmatrix}$

3) Different Spatial Expansions over sub-carriers – in which case the smoothing bit should be set to 0 and used in MM only:

i) N_{TX}=2, N_{STS}=1 $\left[Q_k\right]_{N_{STS}} = \begin{bmatrix}1 & 0\end{bmatrix}^T \; or \; \left[Q_k\right]_{N_{STS}} = \begin{bmatrix}0 & 1\end{bmatrix}^T$

ii) N_{TX}=3, N_{STS}=2 $\left[Q_k\right]_{N_{STS}} = \begin{bmatrix}1 & 0\\ 0 & 0\\ 0 & 1\end{bmatrix}, \begin{bmatrix}1 & 0\\ 0 & 1\\ 0 & 0\end{bmatrix} or \begin{bmatrix}0 & 0\\ 1 & 0\\ 0 & 1\end{bmatrix}$

iii) N_{TX}=4, N_{STS}=2 $\left[Q_k\right]_{N_{STS}} = \begin{bmatrix}1 & 0\\ 0 & 0\\ 0 & 0\\ 0 & 1\end{bmatrix}, \begin{bmatrix}1 & 0\\ 0 & 0\\ 0 & 1\\ 0 & 0\end{bmatrix}, \begin{bmatrix}0 & 0\\ 1 & 0\\ 0 & 0\\ 0 & 1\end{bmatrix} or \begin{bmatrix}0 & 0\\ 1 & 0\\ 0 & 1\\ 0 & 0\end{bmatrix}$

iv) N_{TX}=4, N_{STS}=3 $\left[Q_k\right]_{N_{STS}} = \begin{bmatrix}1 & 0 & 0\\ 0 & 1 & 0\\ 0 & 0 & 0\\ 0 & 0 & 1\end{bmatrix} or \begin{bmatrix}1 & 0 & 0\\ 0 & 0 & 0\\ 0 & 1 & 0\\ 0 & 0 & 1\end{bmatrix}$

c) Beamforming Steering Matrix – In this case Q_k is any matrix that improves the reception in the receiver based on some knowledge of the channel between the transmitter and the receiver. In explicit feedback BF the matrix Q_k is supplied by feedback from the STA to which the beamformed packet is directed.

Copyright © 2006 IEEE. All rights reserved.
This is an unapproved IEEE Standards Draft, subject to change.

In the case where there are fewer space time streams than transmit chains, the first N_{STS} columns of the square matrices above can be used.

The same matrix Q_k shall be applied to subcarrier k during any part of the packet in GF mode and any part of the packet following and including the HT-STF field in a mixed mode packet. This operation is transparent to the receiver.

If the smoothing bit in the HT-SIG is not set to 0, the time domain channel between any space time stream and any transmit chain input, induced by the frequency dependence in the matrix Q_k, and the CSD added according to Table n67, shall not exceed 600ns.

When spatial expansion is applied to the transmission, allowing more transmit chains to be used than spatial streams, the additional CSD value for each TX chain shall not exceed 200 nsec.

If no spatial mapping is applied, the matrix Q_k is equal to the identity matrix and $N_{STS} = N_{TX}$.

20.3.4.7.2 20MHz HT transmission

The signal from the i_{TX} 'th transmit chain $i_{TX} = 1, \ldots, N_{TX}$ is:

$$r_{HT-DATA}^{i_{TX}}(t) = \frac{1}{\sqrt{N_{STS} \cdot N_{HT-DATA}^{Tones}}} \sum_{n=0}^{N_{SYM}-1} w_{T_{SYM}}(t - nT_{SYM}) \left(\sum_{k=0}^{N_{SD}-1} \sum_{i_{STS}=1}^{N_{STS}} \left[Q_{M(k)} \right]_{i_{TX}, i_{STS}} \tilde{d}_{k, i_{STS}, n} \exp\left(j2\pi M(k) \Delta_F \left(t - T_{GI} - nT_{SYM} - T_{CS}^{i_{STS}} \right) \right) + p_{n+z} \sum_{k=-N_{SR}}^{N_{SR}} \sum_{i_{STS}=1}^{N_{STS}} \left[Q_k \right]_{i_{TX}, i_{STS}} P_{i_{STS}}^{(k,n)} \exp(j2\pi k \Delta_F \left(t - T_{GI} - nT_{SYM} - T_{CS}^{i_{STS}} \right) \right) \quad (20\text{-}51)$$

where

z is 3 in a mixed mode packet and 2 in a Green Field Packet.

p_n is defined in 17.3.5.9.

M(k) in the 20MHz case is

$$M(k) = \begin{cases} k-28 & 0 \le k \le 6 \\ k-27 & 7 \le k \le 19 \\ k-26 & 20 \le k \le 25 \\ k-25 & 26 \le k \le 31 \\ k-24 & 32 \le k \le 44 \\ k-23 & 45 \le k \le 51 \end{cases} \quad (20\text{-}52)$$

Copyright © 2006 IEEE. All rights reserved.
This is an unapproved IEEE Standards Draft, subject to change.

$P_{i_{Tx}}^{(k,n)}$ is defined in Equation (20-47) above.

20.3.4.7.3 Transmission in 40MHz HT mode

In the case of 40MHz, the signal from the i_{TX} th transmit chain is:

$$
\begin{aligned}
r_{HT-DATA}^{i_{TX}}(t) = \frac{1}{\sqrt{N_{STS} N_{HT-DATA}^{Tones}}} \sum_{n=0}^{N_{SYM}-1} w_{T_{SYM}}(t - nT_{SYM}) \cdot \\
\Bigg(\sum_{k=0}^{N_{SD}/2-1} \sum_{i_{STS}=1}^{N_{STS}} \left[Q_{M(k)} \right]_{i_{TX}, i_{STS}} \tilde{d}_{k, i_{STS}, n} \exp\left(j2\pi M(k) \Delta_F \left(t - T_{GI} - nT_{SYM} - T_{CS}^{i_{STS}} \right) \right) + \\
p_{n+z} \sum_{k=-N_{SR}}^{0} \sum_{i_{STS}=1}^{N_{STS}} \left[Q_k \right]_{i_{TX}, i_{STS}} P_{i_{STS}}^{(k,n)} \exp\left(j2\pi k \Delta_F \left(t - T_{GI} - nT_{SYM} - T_{CS}^{i_{STS}} \right) \right) + \\
j \sum_{k=N_{SD}/2}^{N_{SD}-1} \sum_{i_{STS}=1}^{N_{STS}} \left[Q_{M(k)} \right]_{i_{TX}, i_{STS}} \tilde{d}_{k, i_{STS}, n} \exp\left(j2\pi M(k) \Delta_F \left(t - T_{GI} - nT_{SYM} - T_{CS}^{i_{STS}} \right) \right) + \\
jp_{n+z} \sum_{k=1}^{N_{SR}} \sum_{i_{STS}=1}^{N_{STS}} \left[Q_k \right]_{i_{TX}, i_{STS}} P_{i_{STS}}^{(k,n)} \exp\left(j2\pi k \Delta_F \left(t - T_{GI} - nT_{SYM} - T_{CS}^{i_{STS}} \right) \right) \Bigg)
\end{aligned}
\tag{20-53}
$$

where

M(k) is given by Equation (20-48)

$$
M(k) = \begin{Bmatrix} k-58 & 0 \le k \le 4 \\ k-57 & 5 \le k \le 31 \\ k-56 & 32 \le k \le 44 \\ k-55 & 45 \le k \le 53 \\ k-52 & 54 \le k \le 62 \\ k-51 & 63 \le k \le 75 \\ k-50 & 76 \le k \le 102 \\ k-49 & 103 \le k \le 107 \end{Bmatrix} \tag{20-54}
$$

The pilot sequence $P_{i_{SMI}}^{(k,n)}$ is defined in Equation (20-48) for 40MHz.

NOTE—the 90º rotation that is applied to the upper part of the 40MHz channel is applied in the same way to the HT-STF, HT-LTF and HT-SIG. The rotation applies to both pilots and the data in upper part of the 40MHz channel.

Copyright © 2006 IEEE. All rights reserved.
This is an unapproved IEEE Standards Draft, subject to change.

20.3.4.7.4 Transmission in HT duplicate mode.

HT duplicate mode provides the lowest transmission rate in 40MHz. It shall only be used for one spatial stream and only with BPSK coding and rate ½ coding.

Under HT duplicate mode, the following equation defines the signal:

$$
\begin{aligned}
r_{HT-DATA}^{i_{TX}}(t) = \frac{1}{\sqrt{N_{Duplicate}^{Tones}}} \sum_{n=0}^{N_{SYM}-1} w_{T_{SYM}}(t - nT_{SYM}) \\
\Bigg(\sum_{k=0}^{47} \left[Q_{M(k)-32} \right]_{i_{TX},1} d_{k,n} \exp\left(j2\pi \left(M(k) - 32 \right) \Delta_F \left(t - nT_{SYM} - T_{GI} \right) \right) + \\
j \sum_{k=0}^{47} \left[Q_{M(k)+32} \right]_{i_{TX},1} d_{k,n} \exp\left(j2\pi \left(M(k) + 32 \right) \Delta_F \left(t - nT_{SYM} - T_{GI} \right) \right) + \\
p_{n+z} \sum_{k=-N_{SR}}^{N_{SR}} \left[Q_{k-32} \right]_{i_{TX},1} P_k \exp\left(j2\pi (k-32) \Delta_F \left(t - nT_{SYM} - T_{GI} \right) \right) + \\
j p_{n+z} \sum_{k=-N_{SR}}^{N_{SR}} \left[Q_{k+32} \right]_{i_{TX},1} P_k \exp\left(j2\pi (k+32) \Delta_F \left(t - nT_{SYM} - T_{GI} \right) \right) \Bigg)
\end{aligned}
\qquad (20\text{-}55)
$$

where

z is defined in 20.3.4.7.2.

$M(k)$, P_k is defined in 17.3.5.9.

N_{SR} has the value defined for non-HT 20MHz transmission.

$\left[Q_k \right]_{i_{TX}}$ is an element from a vector of length N_{TX}, which may be frequency dependent.

The rules of spatial expansion CSD limitation, as specified in 20.3.4.7.1, shall apply to $\left[Q_k \right]_{i_{TX}}$

20.3.4.7.5 Transmission with a short guard interval

Short guard interval is used in the data field of the packet, when the Short GI field in the HT-SIG is set to 1. When it is used, the same formula for the formation of the signal is used as in 20.3.4.7.2 and 20.3.4.7.3 with the exception of T_{GI} replaced by T_{GIS} and T_{SYM} is replaces with T_{SYMS}. Short GI shall not be used in GF mode when the MCS indicates a single spatial stream.

20.3.4.8 Non-HT duplicate transmission

Non-HT duplicate transmission is used to transmit to clause 17 devices that may be present in either the upper and lower channels of the 40MHz channel. The L-STF, L-LTF and L-SIG are transmitted in the same way as in the HT 40MHz transmission. There is no HT-SIG, HT-STF or HT-LTF. Data transmission is defined in Equation (20-56).

Copyright © 2006 IEEE. All rights reserved.
This is an unapproved IEEE Standards Draft, subject to change.

$$
\begin{aligned}
r_{LEG-DUP}^{i_{TX}}\left(t-nT_{SYM}\right) = & \frac{1}{\sqrt{N_{Duplicate}^{Tones}}} w_{TSYM}\left(t-nT_{SYM}\right) \\
& \left(\sum_{k=0}^{47}\left[Q_{M(k)-32}\right]_{i_{TX},1} d_{k,n} \exp\left(j2\pi\left(M\left(k\right)-32\right)(\Delta_F\left(t-nT_{SYM}-T_{GI}-T_{CS}^{i_{TX}}\right)\right)+\right. \\
& j\sum_{k=0}^{47}\left[Q_{M(k)+32}\right]_{i_{TX},1} d_k \exp\left(j2\pi\left(M\left(k\right)+32\right)(\Delta_F\left(t-nT_{SYM}-T_{GI}-T_{CS}^{i_{TX}}\right)\right)+ \\
& p_n \sum_{k=-N_{SR}}^{N_{SR}}\left[Q_{k-32}\right]_{i_{TX},1} P_k \exp\left(j2\pi(k-32)\Delta_F\left(t-nT_{SYM}-T_{GI}-T_{CS}^{i_{TX}}\right)\right)+ \\
& \left. jp_n \sum_{k=-N_{SR}}^{N_{SR}}\left[Q_{k+32}\right]_{i_{TX},1} P_k \exp\left(j2\pi(k+32)\Delta_F\left(t-nT_{SYM}-T_{GI}-T_{CS}^{i_{TX}}\right)\right)\right)
\end{aligned}
\tag{20-56}
$$

where

$P_k, M(k)$ are the ones defined in 17.3.5.9.

$T_{CS}^{i_{TX}}$ is defined in Table n65.

$\left[Q_k\right]_{i_{TX}}$ is an element from a vector of length N_{TX}, which may be frequency dependent.

The rules of spatial expansion CSD limitation, as specified in 20.3.4.7.1, shall apply to $\left[Q_k\right]_{i_{TX}}$

20.3.5 Beamforming

Beamforming is a technique in which the transmitter utilizes the knowledge of the MIMO channel to generate a spatial mapping matrix Q_k that will improve reception in the receiver.

The MIMO channel model is one in which when a vector $\mathbf{x}_k = \left[x_1, x_2, \ldots, x_{N_{TX}}\right]^T$ is transmitted in subcarrier k the received vector $\mathbf{y}_k = \left[y_1, y_2, \ldots, y_{N_{RX}}\right]^T$ is modeled as:

$$\mathbf{y}_k = H_k \mathbf{x}_k + \mathbf{n}$$

Where H_k is the channel matrix $\left(N_{RX}, N_{TX}\right)$ and $\mathbf{n}$ is white (spatial and temporally) Gaussian noise.

Copyright © 2006 IEEE. All rights reserved.
This is an unapproved IEEE Standards Draft, subject to change.

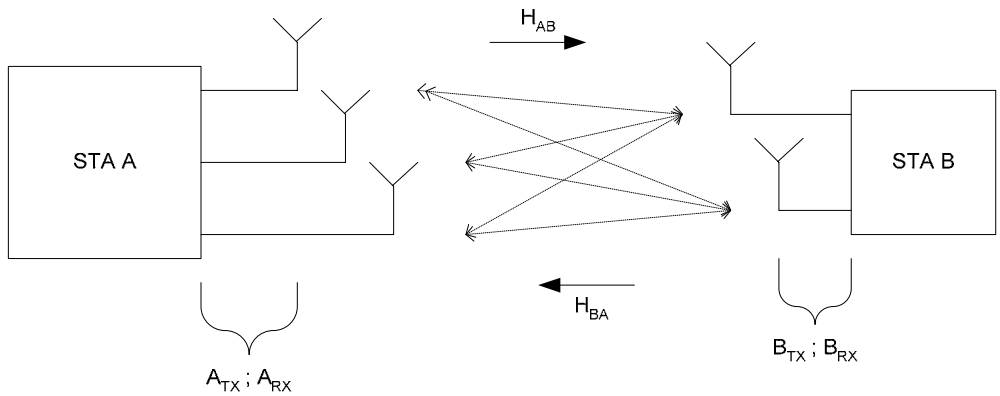

Figure n61 - The beamforming MIMO channel model

When beamforming is used, the transmitter replaces $\mathbf{x}_k$ with $Q_k\mathbf{x}_k$ so that the received vector is

$$\mathbf{y}_k = H_k Q_k \mathbf{x}_k + \mathbf{n} \qquad (20\text{-}57)$$

There are several methods of beamforming, differing in the way the transmitter acquires the knowledge of the channel matrices H_k and on whether the transmitter or the receiver generates Q_k .

20.3.5.1 Implicit Beamforming

In implicit beamforming the transmitter uses the fact that the channel between antenna i at STA A and antenna l at STA B, is the same as the channel measured at antenna i of STA A when antenna l at STA B is transmitting. Using a matrix representation of the channel, it means that the channel between STA A and STA B is the transpose of the channel between STA B and STA A. This is true for the channels between the antennas. Since the actual channel includes the transmit chain in STA A and receive chain in STA B, there is the need for a calibration procedure to correct for the difference in the measured channel, due to the difference between the combinations of STA A transmitter and STA B receiver ($B_{RX} H_{AB} A_{TX}$) vs. STA B transmitter and STA A receiver ($A_{RX} H_{BA} B_{TX}$). (A_{TX} is the diagonal matrix modeling the attenuation and delay in each of STA A transmit chains, similarly B_{TX} and A_{RX}, B_{RX} with receiver chains).

20.3.5.2 Explicit Beamforming

In explicit beamforming, in order for STA A to transmit a beamformed packet to STA B, STA B measures the channel matrices and sends STA A either the mapping matrices Q_k to uses, or the channel matrices H_k .

20.3.5.2.1 CSI Matrices Feedback

Copyright © 2006 IEEE. All rights reserved.
This is an unapproved IEEE Standards Draft, subject to change.

In the CSI matrices feedback the transmitting STA receives an action frame containing the quantized MIMO channel matrix, H, from the receiving STA. The transmitting STA then may use this matrix to compute a set of transmit spatial mapping matrices, Q_k.

The matrix H (of a specific subcarrier) shall be encoded as follows:

a) The maximum of the real part of and the maximum of the imaginary part of each element of the matrix is found and the maximum of these is taken:

$$m_H = \max\left\{\max\left\{\left|\Re H_{k,l}\right|\right\}_{k,l=1}^{k=N_{TX},l=N_{RX}}, \max\left\{\left|\Im H_{k,l}\right|\right\}_{k,l=1}^{k=N_{TX},l=N_{RX}}\right\} \quad (20\text{-}58)$$

b) Each element in the matrix $H_{k,l}$ is quantized to Nb bits in two's complement notation according to the formula:

$$H_{k,l}^{Q} = round\left(\frac{H_{k,l}}{m_H}\left(2^{N_b}-1\right)\right). \quad (20\text{-}59)$$

c) The ratio between $\max\left\{m_H\left(k\right)\right\}_{k=-N_{SR}}^{N_{SR}}$ and $m_H\left(k\right)$ of subcarrier k in decibel units is encoded in 3 bits using one's complement notation.

Therefore each matrix is encoded using $3+2\times Nb\times N_{TX}\times N_{RX}$ bits.

Nb may have the value of 4, 5, 6, 8 bits.

20.3.5.2.2 Non Compressed Steering Matrix Feedback

In non compressed steering matrix feedback, the receiving STA computes a set of matrices for feedback to the transmitter. These matrices are assembled into an action frame as described in 7.4.7.7. The transmitter can then apply these matrices directly as the spatial mapping matrices Q_k.

The encoding of these matrices is identical to the encoding of the CSI matrices. The dimensions of the steering matrices is $N_{TX}\times N_{SS}$.

20.3.5.2.3 Compressed Steering Matrix Feedback

In compressed steering matrix feedback, the receiving STA computes a set of compressed unitary matrices for feedback to the transmitter. These compressed matrices are assembled into an action frame as described in 7.4.7.8.

The transmitter can then apply these matrices, or a function of them, as the spatial mapping matrices Q_k. The matrix compression is defined as follows. The unitary matrix V shall be represented as:

Copyright © 2006 IEEE. All rights reserved.
This is an unapproved IEEE Standards Draft, subject to change.

$$V = \prod_{i=1}^{\min(N-1,M)} \left[D_i \left(1_{i-1} \quad e^{j\phi_{1,i}} \quad \ldots \quad e^{j\phi_{N-1,i}} \quad 1 \right) \prod_{l=i+1}^{N} G_{li}^{T}\left(\psi_{li}\right) \right] \times \tilde{I}_{N\times M} \tag{20-60}$$

The matrix $D_i\left(x_1 \quad \cdots \quad x_n\right)$ is an n by n diagonal matrix with elements x_1 to x_n on the diagonal. Note that there will be the first i elements, x_1 to x_i of D_i will be 1. The matrix $G_{li}(\psi)$ is an n by n Givens rotation matrix:

$$G_{li}(\psi) = \begin{bmatrix} I_{i-1} & 0 & 0 & 0 & 0 \\ 0 & \cos(\psi) & 0 & \sin(\psi) & 0 \\ 0 & 0 & I_{l-i-1} & 0 & 0 \\ 0 & -\sin(\psi) & 0 & \cos(\psi) & 0 \\ 0 & 0 & 0 & 0 & I_{N-l} \end{bmatrix} \tag{20-61}$$

where each I_m is an m by m identity matrix, and $\cos(\Psi)$ and $\sin(\Psi)$ are located at lth and ith row and column. $\tilde{I}_{NxM}$ is an identity matrix padded with zeros to fill the additional rows or columns when $N \neq M$.

For example, a 4x2 V matrix has the following representation:

$$V = \begin{bmatrix} 1 & 0 & 0 & 0 \\ 0 & e^{j\phi_{21}} & 0 & 0 \\ 0 & 0 & e^{j\phi_{31}} & 0 \\ 0 & 0 & 0 & e^{j\phi_{41}} \end{bmatrix} \times G_{21}^{T}\left(\psi_{21}\right) G_{31}^{T}\left(\psi_{31}\right) G_{41}^{T}\left(\psi_{41}\right) \times \begin{bmatrix} 1 & 0 & 0 & 0 \\ 0 & 1 & 0 & 0 \\ 0 & 0 & e^{j\phi_{32}} & 0 \\ 0 & 0 & 0 & e^{j\phi_{42}} \end{bmatrix} \times$$
$$\times G_{32}^{T}\left(\psi_{32}\right) G_{42}^{T}\left(\psi_{42}\right) \times \begin{bmatrix} 1 & 0 \\ 0 & 1 \\ 0 & 0 \\ 0 & 0 \end{bmatrix} \tag{20-62}$$

$$V = \begin{bmatrix} 1 & 0 & 0 & 0 \\ 0 & e^{j\phi_{21}} & 0 & 0 \\ 0 & 0 & e^{j\phi_{31}} & 0 \\ 0 & 0 & 0 & e^{j\phi_{41}} \end{bmatrix} \times \begin{bmatrix} \cos\psi_{21} & \sin\psi_{21} & 0 & 0 \\ -\sin\psi_{21} & \cos\psi_{21} & 0 & 0 \\ 0 & 0 & 1 & 0 \\ 0 & 0 & 0 & 1 \end{bmatrix}^T \begin{bmatrix} \cos\psi_{31} & 0 & \sin\psi_{31} & 0 \\ 0 & 1 & 0 & 0 \\ -\sin\psi_{31} & 0 & \cos\psi_{31} & 0 \\ 0 & 0 & 0 & 1 \end{bmatrix}^T \begin{bmatrix} \cos\psi_{41} & 0 & 0 & \sin\psi_{41} \\ 0 & 1 & 0 & 0 \\ 0 & 0 & 1 & 0 \\ -\sin\psi_{41} & 0 & 0 & \cos\psi_{41} \end{bmatrix}^T$$
$$\times \begin{bmatrix} 1 & 0 & 0 & 0 \\ 0 & 1 & 0 & 0 \\ 0 & 0 & e^{j\phi_{32}} & 0 \\ 0 & 0 & 0 & e^{j\phi_{42}} \end{bmatrix} \times \begin{bmatrix} 1 & 0 & 0 & 0 \\ 0 & \cos\psi_{32} & \sin\psi_{32} & 0 \\ 0 & -\sin\psi_{32} & \cos\psi_{32} & 0 \\ 0 & 0 & 0 & 1 \end{bmatrix}^T \begin{bmatrix} 1 & 0 & 0 & 0 \\ 0 & \cos\psi_{42} & 0 & \sin\psi_{42} \\ 0 & 0 & 1 & 0 \\ 0 & -\sin\psi_{42} & 0 & \cos\psi_{42} \end{bmatrix}^T \times \begin{bmatrix} 1 & 0 \\ 0 & 1 \\ 0 & 0 \\ 0 & 0 \end{bmatrix} \tag{20-63}$$

Copyright © 2006 IEEE. All rights reserved.
This is an unapproved IEEE Standards Draft, subject to change.

This is a description of a method for finding a compressed V matrix using Givens Rotation.

$$V = \left[\prod_{i=1}^{\min(M,N-1)} \left[D_i \left(1_{i-1} \quad e^{j\phi_{i,i}} \quad \ldots \quad e^{j\phi_{N-1,i}} \quad 1 \right) \prod_{l=i+1}^{N} G_{li}^{T}(\psi_{li}) \right] \right] \tilde{I}_{N\times M} \tag{20-64}$$

A unitary NxM beamforming matrix V is column-wise phase invariant because the steering matrix needs a reference in phase per each column. This means V may be equivalent to $\tilde{V}\tilde{D}$, where $\tilde{D}$ is a column-wise phase shift matrix such as $\tilde{D} = diag(e^{j\theta_1}, .e^{j\theta_2}, .., e^{j\theta_M})$. When the beamformee estimates the channel, it may find $\tilde{V}$ for the beamforming matrix for the beamformer, but it may send $\tilde{V}\tilde{D}$ back to the beamformer, where $V = \tilde{V}\tilde{D}$. θ_i in $\tilde{D}$ is found to make the last row of $\tilde{V}\tilde{D}$ to be real numbers.

When the beamformee finds V matrix, all of elements in V may be complex numbers. The angles $\phi_{1,1}$, …, $\phi_{N-1,1}$ in the diagonal matrix $D_1\left(e^{j\phi_{11}} \quad \ldots \quad e^{j\phi_{N-1,1}} \quad 1\right)^*$ may be found to make the first column of $V\tilde{D}$ to all be real numbers. Now, the first column of $\left(G_{41}G_{31}G_{21}D_1^{\ *}\right)\times V$ can be $[1\ 0\ \ldots\ 0]^T$ by Givens rotation G_{l1}'s such as

$$\begin{bmatrix} \cos\psi_{N1} & 0 & 0 & \sin\psi_{N1} \\ 0 & 1 & 0 & 0 \\ 0 & 0 & 1 & 0 \\ -\sin\psi_{N1} & 0 & 0 & \cos\psi_{N1} \end{bmatrix} \begin{bmatrix} \cos\psi_{31} & 0 & \sin\psi_{31} & 0 \\ 0 & 1 & 0 & 0 \\ -\sin\psi_{31} & 0 & \cos\psi_{31} & 0 \\ 0 & 0 & 0 & 1 \end{bmatrix} \begin{bmatrix} \cos\psi_{21} & \sin\psi_{21} & 0 & 0 \\ -\sin\psi_{21} & \cos\psi_{21} & 0 & 0 \\ 0 & 0 & 1 & 0 \\ 0 & 0 & 0 & 1 \end{bmatrix} \begin{bmatrix} e^{j\phi_{11}} & 0 & 0 & 0 \\ 0 & \ddots & 0 & 0 \\ 0 & 0 & e^{j\phi_{N-1,1}} & 0 \\ 0 & 0 & 0 & 1 \end{bmatrix}^* \times V = \begin{bmatrix} 1 & 0 & 0 & 0 \\ 0 & & & \\ 0 & & V_2 & \\ 0 & & & \end{bmatrix} \tag{20-65}$$

For new (N-1) x (M-1) submatrix V_2, this process may be applied in the same way. Then, the angles $\phi_{2,2}$, …, $\phi_{N-1.2}$ in the diagonal matrix $D_2\left(1 \quad e^{j\phi_{22}} \quad e^{j\phi_{32}} \quad 1\right)^*$ may be found to make the first column of V_2 to be all real numbers. Now, the first two columns of $\left(G_{42}G_{32}D_2^*\right)\left(G_{41}G_{31}G_{21}D_1^{\ *}\right)\times V$ can be $\tilde{I}_{Nx2}$ by Givens rotation G_{l2}'s such as

$$\begin{bmatrix} 1 & 0 & 0 & 0 \\ 0 & \cos\psi_{N2} & 0 & \sin\psi_{21} \\ 0 & 0 & 1 & 0 \\ 0 & -\sin\psi_{N2} & 0 & \cos\psi_{N2} \end{bmatrix} \begin{bmatrix} 1 & 0 & 0 & 0 \\ 0 & \cos\psi_{32} & \sin\psi_{32} & 0 \\ 0 & -\sin\psi_{32} & \cos\psi_{32} & 0 \\ 0 & 0 & 0 & 1 \end{bmatrix} \begin{bmatrix} 1 & 0 & 0 & 0 \\ 0 & e^{j\phi_{22}} & 0 & 0 \\ 0 & 0 & e^{j\phi_{N-1,2}} & 0 \\ 0 & 0 & 0 & 1 \end{bmatrix}^* \times G_{41}G_{31}G_{21}D_1^{**}V = \begin{bmatrix} 1 & 0 & 0 & 0 \\ 0 & 1 & 0 & 0 \\ 0 & 0 & & \\ 0 & 0 & V_3 & \end{bmatrix} \tag{20-66}$$

Copyright © 2006 IEEE. All rights reserved.
This is an unapproved IEEE Standards Draft, subject to change.

This process may keep going until the first M columns of right side matrix becomes $\widetilde{I}_{NxM}$. When M < N, this process does not have to go on because V_{M+1} will be nulled out by $\widetilde{I}_{NxM}$. Then, by multiplying the conjugate transpose of product of series of D_i's and G_{li}'s on the left, V can be expressed as

$$V = \left[\prod_{i=1}^{\min(M,N-1)} \left[D_i \left(1_{i-1} \quad e^{j\phi_{1,i}} \quad \ldots \quad e^{j\phi_{N-1,i}} \quad 1 \right) \prod_{l=i+1}^{N} G_{li}^{T}\left(\psi_{li}\right) \right] \right] \widetilde{I}_{N\times M} \qquad (20\text{-}67)$$

20.3.6 High Throughput Preamble Format for Sounding PPDUs

MIMO channel measurement takes place in every PPDU as a result of transmitting the HT-LTFs as part of the PLCP preamble. At a minimum, the number of HT-LTFs transmitted must be equal to the number of space time streams transmitted, and these are transmitted using the same spatial transformation that is used for the HT-Data. This enables the computation of the spatial equalization at the receiver.

When the number of space time streams, N_{STS} , is less than the number of transmit antennas, or less than $\min\left(N_{TX}, N_{RX}\right)$, sending only N_{STS} HT-LTFs does not allow the receiver to recover a full characterization of the MIMO channel, even though the resulting MIMO channel measurement is sufficient for receiving the HT-Data.

However, there are several cases where it is desirable to obtain as full a characterization of the channel as is possible, thus requiring the transmission of a sufficient number of HT-LTFs to sound the full dimensionality of the channel, which is in some cases N_{TX} , and in other cases $\min\left(N_{TX}, N_{RX}\right)$. We refer to these cases of MIMO channel measurement as MIMO channel sounding. A sounding packet may be used to probe available channel dimensions. A sounding PPDU is identified by setting the sounding bit in HT-SIG to zero. A sounding PPDU may have any allowed number of HT-LTFs satisfying $N_{LTF} \geq N_{STS}$ (A sounding packet may have $N_{STS} = N_{LTF}$). In general, if the sounding bit in the HT-SIG is set to zero, when $N_{LTF} > N_{STS}$, staggered HT-LTFs are used, except for the case where $N_{SS} = 3$ and $N_{LTF} = 4$ or in a zero length packet.

Even if N_{ESS} =0 in a sounding packet, the sounding bit shall be set to zero.

20.3.6.1 Sounding with a zero length packet

An STA may sound the channel using a zero length packet (indicated by zero in the Length field in the HT-SIG) with the sounding bit set. The number of LTF's is the number implied by the MCS. No data field will follow the last HT-LTF or the HT-SIG (see Figure n62).

It is optional for an STA to process a zero length packet.

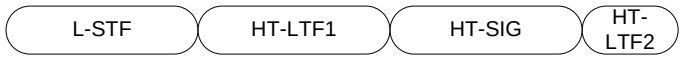

Figure n62 -An example of a zero length packet used for sounding

Copyright © 2006 IEEE. All rights reserved.
This is an unapproved IEEE Standards Draft, subject to change.

20.3.6.2 Sounding PPDU for calibration

In the case of a bidirectional calibration exchange, two STAs exchange sounding PPDUs enabling the receiving STA to compute an estimate of the MIMO channel matrix, H_k, for each subcarrier. In general, in an exchange of calibration messages, the number of spatial streams is less than the number of transmit antennas, necessitating the use of staggered HT-LTFs. In the case of sounding PPDUs for calibration, the antenna mapping matrix shall be

$$Q_k = \mathbf{C}_{CSD}(k) P_{HTLTF} \tag{20-68}$$

where

$\mathbf{C}_{CSD}(k)$ is a diagonal cyclic shift matrix in which the diagonal elements carry frequency-domain representation of the cyclic shifts given in Table n65

$\mathbf{P}_{HTLTF}$ is the unitary matrix given in 20.3.3.2.2.4

20.3.6.3 Sounding PPDU for channel quality assessment

A MIMO channel with N_{TX} transmit antennas and N_{RX} receive antennas can support a maximum of $N_{STS,\max} = \min\left(N_{TX}, N_{RX}\right)$ space time streams. In order for a receiving STA to obtain a channel quality assessment for all $N_{STS,\max}$ available spatial streams, so that it can respond to an MRQ, when using a transmit steering matrix Q_k, it needs an estimate of the effective channel $H_k Q_k$, where Q_k is in this case a $N_{TX} \times N_{STS,\max}$ orthonormal steering matrix. This requires the transmitting STA to send HT-LTFs to sound the $N_{STS,\max}$ available space time streams. The number of HT-LTFs can be determined from HT-SIG fields of MCS and STBC as shown in Table n70. STAs supporting the transmission of staggered HT-LTFs can send a sounding PPDU using extension HT-LTFs as necessary. STAs that don't support transmission of segemented PPDUs shall only send a sounding PPDU when $N_{SS} = N_{STS,\max}$.

20.3.7 Regulatory Requirements

Wireless LANs implemented in accordance with this standard are subject to equipment certification andoperating requirements established by regional and national regulatory administrations. The PMD specification establishes minimum technical requirements for interoperability, based upon established regulations at the time this standard was issued. These regulations are subject to revision, or may be superseded. Requirements that are subject to local geographic regulations are annotated within the PMD specification. Regulatory requirements that do not affect interoperability are not addressed in this standard. Implementers are referred to the regulatory sources in Annex I for further information. Operation in countries within defined regulatory domains may be subject to additional or alternative national regulations.

20.3.8 Channel Numbering and Channelization

The STA operates both in the 5GHz band and 2.4GHz band. When using 20MHz channels it uses the same channels as in the 11a/11g. When using the 40MHz channel, it can operate in the channels defined in 20.3.8.1 and 20.3.8.2.

Copyright © 2006 IEEE. All rights reserved.
This is an unapproved IEEE Standards Draft, subject to change.

20.3.8.1 Channel Allocation in the 5 GHz Band

Channel center frequencies are defined at every integral multiple of 5 MHz above 5 GHz (for 20 MHz channels). The relationship between center frequency and channel number is given as follows:

$$\textit{Channel center frequency} = 5000 + 5 \cdot n_{ch} \text{ (MHz)} \qquad (20\text{-}69)$$

where

n_{ch} = 0,1,…200

The 40MHz channels in 5GHz are specified by two fields: ($N_{control\_ch}$, extension). The first field represents the channel number of the control channel, and the second one indicates whether the extension channel is above or below the control channel (1 -> above, -1 -> below). For example, a 40MHz channel consisting of channel 36 and 40 where channel 36 is the control channel shall be specified as (36,1).

The following table lists the valid settings of these two fields in the 5 GHz band.

Table n78 - 40MHz channel allocation in the 5GHz band

Regulatory domain	Band (GHZ)	$N_{control\_ch}$		Center Frequency (MHz)
		Extension = 1	Extension = -1	
United States	U-NII lower band	36	40	5190
	(5.15-5.25)	44	48	5230
United States	U-NII middle band	52	56	5270
	(5.25-5.35)	60	64	5310
Europe	ETSI (5.5-5.7)	100	104	5510
		108	112	5550
		116	120	5590
		124	128	5630
		132	136	5670
United States	U-NII upper band	149	153	5755
	(5.725-5.825)	157	161	5795

20.3.8.2 Channel Allocation in the 2.4 GHz Band

Channel center frequencies are defined at every integral multiple of 5 MHz in the 2.4 GHz band. The relationship between center frequency and channel number is given by the following equation:

$$\textit{Channel center frequency} = 2407 + 5 \cdot n_{ch} \text{ (MHz)} \qquad (20\text{-}70)$$

Copyright © 2006 IEEE. All rights reserved.
This is an unapproved IEEE Standards Draft, subject to change.

where

n_{ch} = 1,2,…11

The 40MHz channels in 2.4GHz are specified in the same way as in 5GHz: (Ncontrol_ch, extension). The first field represents the channel number of the control channel, and the second one indicates whether the extension channel is above or below the control channel (1 -> above, -1 -> below). For example, a 40MHz channel consisting of channel 2 and channel 6 where channel 6 is the control channel shall be specified as (6, -1).

The following table lists the valid settings of these two fields in the 2.4 GHz band.

Table n79 - 40Mhz channel alocation in the 2.4GHz band

Regulatory domain	$N_{control\_ch}$		Center Frequency (MHz)
	Extension = 1	Extension = -1	
United States	1	5	2422
Canada	2	6	2427
Europe	3	7	2432
	4	8	2437
	5	9	2442
	6	10	2447
	7	11	2452

20.3.9 Transmit and receive in-band and out-of-band spurious transmissions

The OFDM PHY shall conform to in-band and out-of-band spurious emissions as set by regulatory bodies.

20.3.10 Transmitter RF delay

The transmitter RF delay shall follow subclause 17.3.8.5.

20.3.11 Slot time

The slot time shall follow subclause 17.3.8.6 for 5 GHz bands and subclause 19.4.4 for 2.4 GHz bands.

20.3.12 Transmit and receive port impedance

The transmit and receive antenna port impedance for each transmit and receive antenna shall follow subclause 17.3.8.7.

20.3.13 Transmit and receive operating temperature range

Copyright © 2006 IEEE. All rights reserved.
This is an unapproved IEEE Standards Draft, subject to change.

The transmit and receive temperature range shall follow subclause 17.3.8.8.

20.3.14 PMD Tx specification

20.3.14.1 Transmit Spectrum Mask

When transmitting in a 20MHz channel, the transmitted spectrum shall have a 0 dBr (dB relative to the maximum spectral density of the signal) bandwidth not exceeding 18 MHz, –20 dBr at 11 MHz frequency offset, –28 dBr at 20 MHz frequency offset and –45 dBr at 30 MHz frequency offset and above. The transmitted spectral density of the transmitted signal shall fall within the spectral mask, as shown in Figure n63. The measurements shall be made using a 100 kHz resolution bandwidth and a 30 kHz video bandwidth.

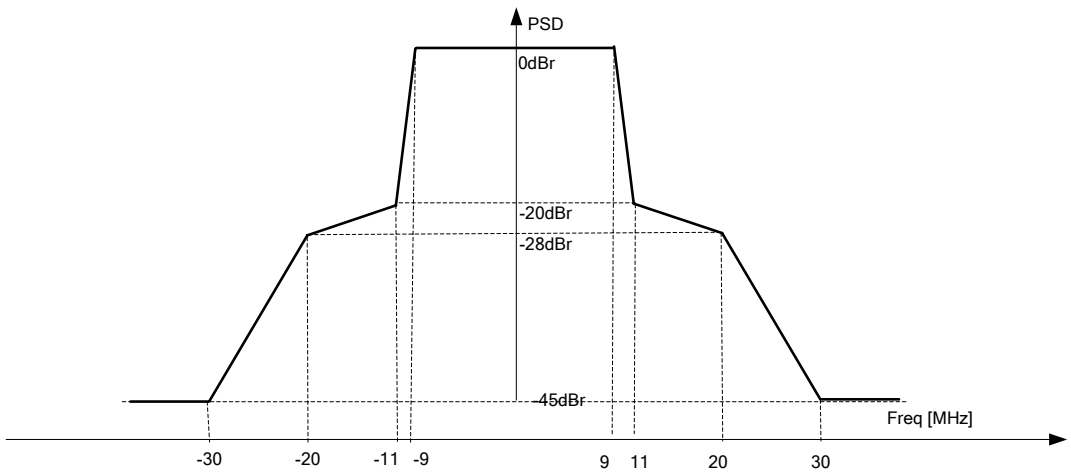

Figure n63 - Transmit spectral mask for 20MHz Transmission

When transmitting in a 40MHz channel, the transmitted spectrum shall have a 0 dBr bandwidth not exceeding 38 MHz, –20 dBr at 21 MHz frequency offset, -28 dBr at 40 MHz offset and –45 dBr at 60 MHz frequency offset and above. The transmitted spectral density of the transmitted signal shall fall within the spectral mask, as shown in Figure n64.

The transmit spectral mask for 20MHz transmission in upper or lower 20Mhz channels of a 40MHz is the same mask as that used for the 40MHz channel.

Copyright © 2006 IEEE. All rights reserved.
This is an unapproved IEEE Standards Draft, subject to change.

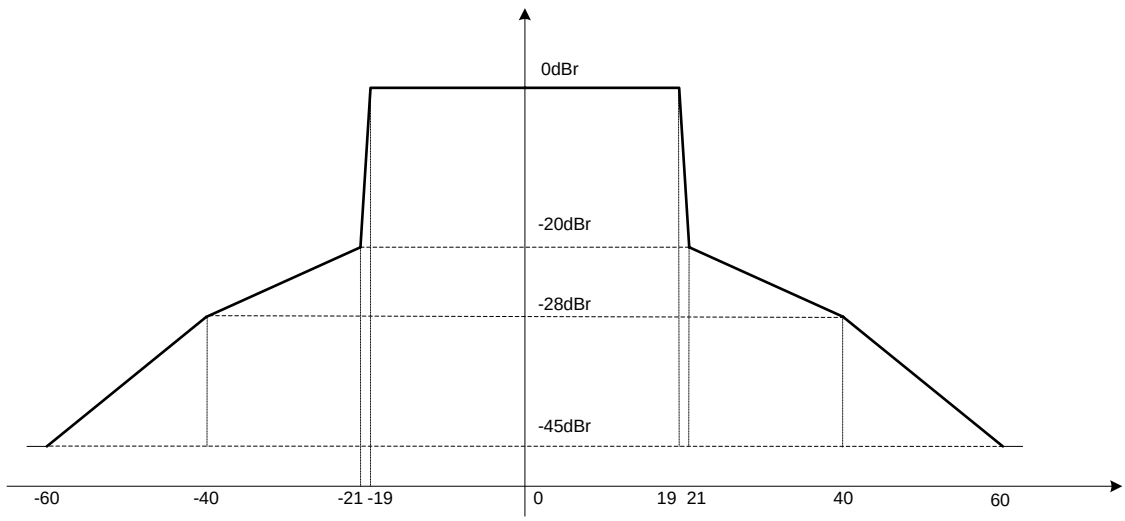

Figure n64 - Transmit spectral mask for a 40MHz channel

20.3.14.2 Spectral Flatness

In a 20MHz channel and in corresponding 20MHz transmission in a 40MHz channel, the average energy of the constellations in each of the spectral lines –16 to –1 and +1 to +16 shall deviate no more than ± 2 dB from their average energy. The average energy of the constellations in each of the spectral lines –28 to –17 and +17 to +28 will deviate no more than +2/–4 dB from the average energy of spectral lines –16 to –1 and +1 to +16.

In a 40 MHz transmission the average energy of the constellations in each of the spectral lines –42 to –2 and +2 to +42 shall deviate no more than ± 2 dB from their average energy. The average energy of the constellations in each of the spectral lines –43 to –58 and +43 to +58 shall deviate no more than +2/–4 dB from the average energy of spectral lines –42 to –2 and +2 to +42.

The data for this test will be based on the channel estimate step.

20.3.14.3 Transmit Power

The maximum allowable output power of the device is the same as in a clause 17 or clause 19 transmitter. If more than one transmit chain is used, the total power in all transmit chains shall be equal to the total power possible for a clause 17 or clause 19 transmitter. If a 40MHz channel is used, the total transmitted power in the 40MHz bandwidth shall be equal to the total transmitted power allowed for a clause 17 transmitter in a 20MHz channel.

20.3.14.4 Transmit center frequency tolerance

The transmitter center frequency tolerance shall be ±20 ppm maximum. The different transmit chain center frequencies (LO) and each transmit chain symbol clock frequency shall all be derived from the same reference oscillator.

20.3.14.5 Packet alignment

Copyright © 2006 IEEE. All rights reserved.
This is an unapproved IEEE Standards Draft, subject to change.

The receiver will assert PHY-CCA.indicate(idle).(12.3.5.10) at the 4µsec boundary following the reception of the last symbol of the packet.

The transmitter will assert PHY-TXEND.confirm (12.3.5.7) at the trailing boundary of the last symbol of the packet on the air.

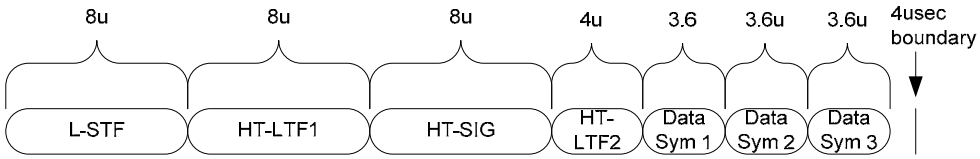

Figure n65 - Packet alignment example - GF packet with short GI

20.3.14.6 Reduced Interframe Space (RIFS)

The transmitter shall be able to transmit a packet 2usec after PHY-TXEND.confirm is asserted. The receiver shall be able to decode a packet if it starts 2µsec after PHY-RXEND.indication is asserted for the previous packet. RIFS timing accuracy is ±10%.

20.3.14.7 Symbol clock frequency tolerance

The symbol clock frequency tolerance shall be ±20 ppm maximum for 5 GHz bands and ±25 ppm for 2.4 GHz bands. The transmit center frequency and the symbol clock frequency for all transmit antennas shall be derived from the same reference oscillator.

20.3.14.8 Modulation accuracy

Transmit modulation accuraty specifications are described in the subclause. The test method is described in 20.3.14.8.3.

20.3.14.8.1 Transmit center frequency leakage

The transmitter center frequency leakage shall follow subclause 17.3.9.6.1 for all 20 MHz modes of transmission. For 40 MHz modes, the center frequency leakage shall not exceed -18 dB relative to overall transmitted power, or, equivalently, +2 dB relative to the average energy of the rest of the subcarriers. The transmit center frequency leakage is specified per antenna.

20.3.14.8.2 Transmitter constellation error

The relative constellation RMS error, averaged over subcarriers, OFDM frames, and spatial streams shall not exceed a data-rate dependent value according to Table n80. In Table n80 the number of spatial streams is equal to the number of transmit antennas. The same requirement applies both to 20MHz channels and 40MHz channels.

Table n80 —Allowed relative constellation error versus constellation size and code rate

Modulation	Code Rate	Relative constellation error (dB)
BPSK	1/2	-5
QPSK	1/2	-10

Copyright © 2006 IEEE. All rights reserved.
This is an unapproved IEEE Standards Draft, subject to change.

QPSK	3/4	-13
16-QAM	1/2	-16
16-QAM	3/4	-19
64-QAM	2/3	-22
64-QAM	3/4	-25
64-QAM	5/6	-28

20.3.14.8.3 Transmitter modulation accuracy (EVM) test

The transmit modulation accuracy test shall be performed by instrumentation capable of converting the transmitted signals into a streams of complex samples at 40 Msample/s or more, with sufficient accuracy in terms of I/Q arm amplitude and phase balance, dc offsets, phase noise, analog to digital quantization noise, etc. Each transmit chain will be connected directly through a cable to the setup input port. A possible embodiment of such a setup is converting the signals to a low IF frequency with a microwave synthesizer, sampling the signal with a digital oscilloscope and decomposing it digitally into quadrature components. The sampled signal shall be processed in a manner similar to an actual receiver, according to the following steps, or an equivalent procedure:

a) Start of frame shall be detected.

b) Transition from short sequences to channel estimation sequences shall be detected, and fine timing (with one sample resolution) shall be established.

c) Coarse and fine frequency offsets shall be estimated.

d) The packet shall be derotated according to estimated frequency offset.

e) The complex channel response coefficients shall be estimated for each of the subcarriers and each of the transmit chains.

f) For each of the data OFDM symbols: transform the symbol into subcarrier received values, estimate the phase from the pilot subcarriers in all spatial streams, derotate the subcarrier values according to estimated phase, group the results from all the receiver chains in each subcarrier to a vector, multiply the vector by a zero-forcing equalization matrix generated from the channel estimated during the channel estimation phase.

g) For each data-carrying subcarrier in each spatial stream, find the closest constellation point and compute the Euclidean distance from it.

h) Compute the average of the RMS of all errors in a packet. It is given by:

$$Error_{RMS} = \frac{\sum_{i_f=1}^{N_f} \sqrt{\frac{\sum_{i_s=1}^{N_{SYM}} \left[\sum_{i_{ss}=1}^{N_{SS}} \left(\sum_{i_{sc}=1}^{N_{ST}} \left(\left(I\left(i_f, i_s, i_{ss}, i_{sc}\right) - I_0\left(i_f, i_s, i_{ss}, i_{sc}\right) \right)^2 + \left(Q\left(i_f, i_s, i_{ss}, i_{sc}\right) - Q_0\left(i_f, i_s, i_{ss}, i_{sc}\right) \right)^2 \right) \right) \right]}{N_{SYM} \times N_{SS} \times N_{ST} \times P_o}}}{N_f} \qquad (20\text{-}71)$$

where

N_f is the number of frames for the measurement;

Copyright © 2006 IEEE. All rights reserved.
This is an unapproved IEEE Standards Draft, subject to change.

$I_0\left(i_f, i_s, i_{ss}, i_{sc}\right), Q_0\left(i_f, i_s, i_{ss}, i_{sc}\right)$ denotes the ideal symbol point of the i_f'th frame, i_s'th OFDM symbol of the frame, i_{ss}'th spatial stream, i_{sc}'th subcarrier of the OFDM symbol in the complex plane;

$I\left(i_f, i_s, i_{ss}, i_{sc}\right), Q\left(i_f, i_s, i_{ss}, i_{sc}\right)$ denotes the observed point of the i_f'th frame, i_s'th OFDM symbol of the frame, i_{ss}'th spatial stream, i_{sc}'th subcarrier of the OFDM symbol in the complex plane (see Figure 199);

P_0 is the average power of the constellation;

the vector error on a phase plane is shown in Figure 199;

the test shall be performed over at least 20 frames (*f*), and the average of the RMS shall be taken. The packets under test shall be at least 16 OFDM symbols long. Random data shall be used for the symbols.

20.3.15 High Throughput PMD receiver specification

20.3.15.1 Receiver minimum input sensitivity

The packet error rate (PER) shall be less than 1% at a PSDU length of 4096 bytes for rate-dependent input levels shall be the numbers listed in Table nXX02 or less. The minimum input levels are measured at the antenna connectors and are referenced as the average power per receive antenna. The transitting device antenna ports shall be connected through a cable to the Device Under test input ports.

Table n81 —Receiver minimum input level sensitivity

Modulation Coding	Rate (R)	Adjacentchannel rejection (dB)	Alternate adjacent channel rejection (dB)	Minimum sensitivity (dBm) (20 MHz channel spacing)	Minimum sensitivity (dBm) (40 MHz channel spacing)
BPSK	1/2	16	32	-80	-77
QPSK	1/2	13	29	-77	-74
QPSK	3/4	11	27	-75	-72
16-QAM	1/2	8	24	-72	-69
16-QAM	3/4	4	20	-68	-65
64-QAM	2/3	0	16	-64	-61
64-QAM	3/4	–1	15	-63	-60
64-QAM	5/6	–2	14	-62	-59

20.3.15.2 Adjacent channel rejection

Copyright © 2006 IEEE. All rights reserved.
This is an unapproved IEEE Standards Draft, subject to change.

The adjacent channel rejection shall follow 17.3.10.2 for all 20 MHz modes of transmission with the exception the 1% PER is required for 4096 byte packets rather than 10% for 1000 byte packet. For all 40 MHz modes of transmission, the adjacent channel rejection shall be measured by setting the desired signal's strength 3 dB above the rate dependent sensitivity specified in Table nXX02 and raising the power of the interfering signal until 1% PER is caused for a PSDU length of 4096 bytes. The power difference between the interfering and the desired channel is the corresponding adjacent channel rejection. The adjacent channel center frequencies shall be separated by 40 MHz. The interfering signal in the adjacent channel shall be a conformant OFDM signal, unsynchronized with the signal in the channel under test. For a conformed OFDM PHY, the corresponding rejection shall be no less than specified in Table n81.

20.3.15.3 Non-adjacent channel rejection

The non-adjacent channel rejection shall follow 17.3.10.3 for all 20 MHz modes of transmission with the exception the 1% PER is required for 4096 byte packets rather than 10% for 1000 byte packet. For all 40 MHz modes of transmission, the non-adjacent channel rejection shall be measured by setting the desired signal's strength 3 dB above the rate-dependent sensitivity specified in Table n81, and raising the power of the interfering signal until a 1% PER occurs for a PSDU length of 4096 bytes. The power difference between the interfering and the desired channel is the corresponding non-adjacent channel rejection. The interfering signal in the non-adjacent channel shall be a conformant OFDM signal, unsynchronized with the signal in the channel under test. For a conformed OFDM PHY, the corresponding rejection shall be no less than specified in Table n81. The non-adjacent channel rejection for 40 MHz modes of transmission is applicable only to 5 GHz band.

20.3.15.4 Receiver maximum input level

The receiver shall provide a maximum PER of 10% at a PSDU length of 1000 bytes, for a maximum input level of –30 dBm measured at each antenna for any baseband modulation.

20.3.15.5 Clear channel assessment (CCA) sensitivity

The start of a valid High Througput transmission at a receive level equal to or greater than the minimum modulation and coding rate sensitivity (–80 dBm for a 20 MHz channel, -77dBm for a 40MHz channel) shall cause CCA to indicate busy with a probability > 90% within 4µs for both greenfield, mixed mode and non-HT modes. In a 40MHz channel CCA shall be idicated for a signal at that level at the control channel. If the preamble portion was missed, the receiver shall hold the CS signal busy for any signal 20 dB above the minimum modulation and coding rate sensitivity (–60 dBm for a 20 MHz channel, -57 dBm for a 40MHz channel).

20.3.15.6 Received Channel Power Indicator (RCPI) Measurement

The RCPI indicator is a measure of the received RF power in the selected channel. This parameter shall be a measure by the PHY sublayer of the received RF power in the channel measured over the entire received frame. The received power shall be the average over all receive chains. RCPI shall be a monotonically increasing, logarithmic function of the received power level defined in dBm. The allowed values for the Received Channel Power Indicator (RCPI) parameter shall be an 8 bit value in the range from 0 through 220, with indicated values rounded to the nearest 0.5 dB as follows:

Copyright © 2006 IEEE. All rights reserved.
This is an unapproved IEEE Standards Draft, subject to change.

— 0: Power < -110 dBm

— 1: Power = -109.5 dBm

— 2: Power = -109.0 dBm

— and so on up to

— 220: Power > -0 dBm

— 221-254: reserved

— 255: Measurement not available

where

RCPI = int{(Power in dBm +110)*2} for 0dbm > Power > -110dBm

Accuracy for each measurement shall be +/- 5dB (95% confidence interval) within the specified dynamic range of the receiver. The measurement shall assume a receiver noise equivalent bandwidth equal to the channel bandwidth multipled by 1.1.

20.3.16 PLCP transmit procedure

Three options for transmit PLCP procedure are shown in Figure n66, Figure n67 and figure 200. The first two options are selected if the FORMAT field of PHYTXSTART.request(TXVECTOR) is set to HT_MIXED_MODE and HT_GREENFIELD respectively. The third option is to follow the transmit procedure as in clause 17 if the FORMAT field is set to NOT_HT. In all this options, in order to transmit data, PHY-TXSTART.request shall be enabled so that the PHY entity shall be in the transmit state. Further, the PHY shall be set to operate at the appropriate frequency through station management via the PLME. Other transmit parameters, such as MCS Coding types and TX power , are set via the PHY-SAP with the PHY-TXSTART.request(TXVECTOR), as described in 20.2.2.

A clear channel shall be indicated by PHY-CCA.indicate(IDLE). The MAC considers this indication before

issuing the PHY-TXSTART.request. Transmission of the PPDU shall be initiated after receiving the PHYTXSTART.request(TXVECTOR) primitive. The TXVECTOR elements for the PHY-TXSTART.request are specified in table n136.

The PLCP shall issue the parameters in the following PMD primitives to configure the PHY:

- PMD_PWRLEVEL
- PMD_DATARATE
- PMD_TX_PARAMETERS
- PMD_EXPANSION_MAT

The PLCP shall then issue a PMD_TXSTART.request, and transmission of the PLCP preamble and PLCP header, based on the parameters passed in the PHY-TXSTART.request primitive. Once PLCP preamble transmission is started, the PHY entity shall immediately initiate data scrambling and data encoding. The encoding method shall be based on the ADVANCED_CODING and MCS parameter of the TXVECTOR. The scrambled and encoded data shall then be exchanged between the MAC and the PHY through a series

Copyright © 2006 IEEE. All rights reserved.
This is an unapproved IEEE Standards Draft, subject to change.

of PHY-DATA.request(DATA) primitives issued by the MAC, and PHY-DATA.confirm primitives issued by the PHY. A modulation rate change, if any, shall be initiated from the SERVICE field data of the PLCP header, as described in 20.3.2.

The PHY proceeds with PSDU transmission through a series of data octet transfers from the MAC. The PLCP header parameter, SERVICE, and PSDU are encoded by the encoder selected by the ADVANCED_CODING and MCS parameter of the TXVECTOR as described in 20.3.4.3. At the PMD layer, the data octets are sent in bit 0–7 order and presented to the PHY through PMD_DATA.request primitives. Transmission can be prematurely terminated by the MAC through the primitive PHY-TXEND.request. PHY-TXSTART shall be disabled by the issuance of the PHY-TXEND.request. Normal termination occurs after the transmission of the final bit of the last PSDU octet, according to the number supplied in the LENGTH or HT_LENGTH field depending on whether the packet is in legacy format or HT_format.

The packet transmission shall be completed and the PHY entity shall enter the receive state (i.e., PHYTXSTART shall be disabled). Each PHY-TXEND.request is acknowledged with a PHY-TXEND.confirm primitive from the PHY. If the coded PSDU (C-PSDU) is not multiples of the OFDM symbol, bits shall be stuffed to make the C-PSDU length multiples of the OFDM symbol.

In the PMD, the GI or short GI shall be inserted in every OFDM symbol as a countermeasure against severe delay spread.

A typical state machine implementation of the transmit PLCP is provided in Figure n68. Requests (.req) and confirmations(.confirm) are issued once with designated states.

Figure n66 - PLCP Transmit Procedure – Mixed Mode Packet Format

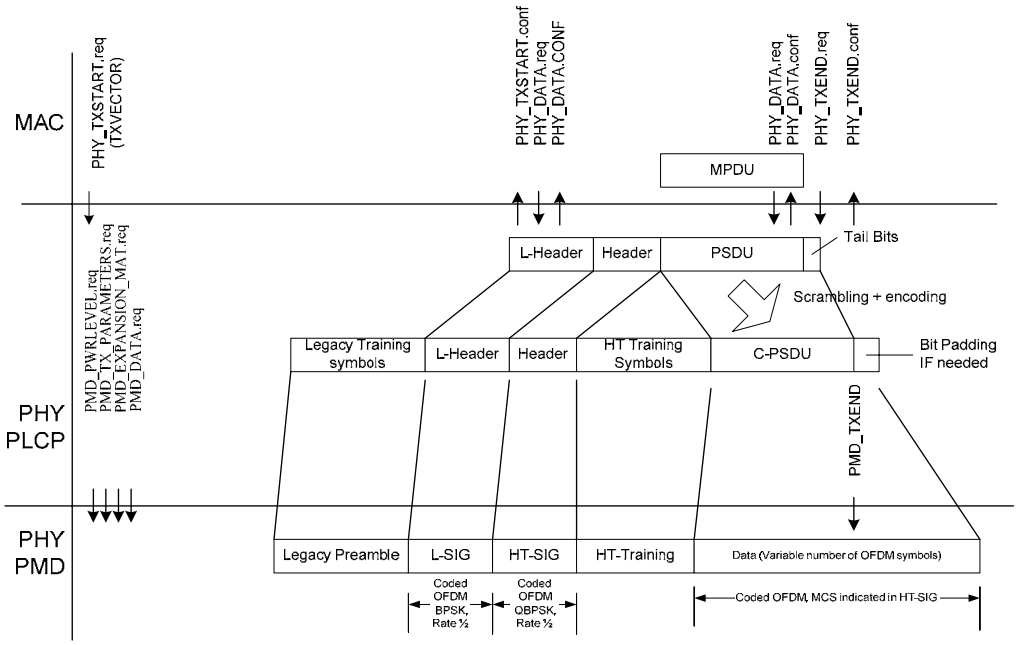

Figure n67 - PLCP Transmit Procedure – Greenfield Packet Format

Copyright © 2006 IEEE. All rights reserved.
This is an unapproved IEEE Standards Draft, subject to change.

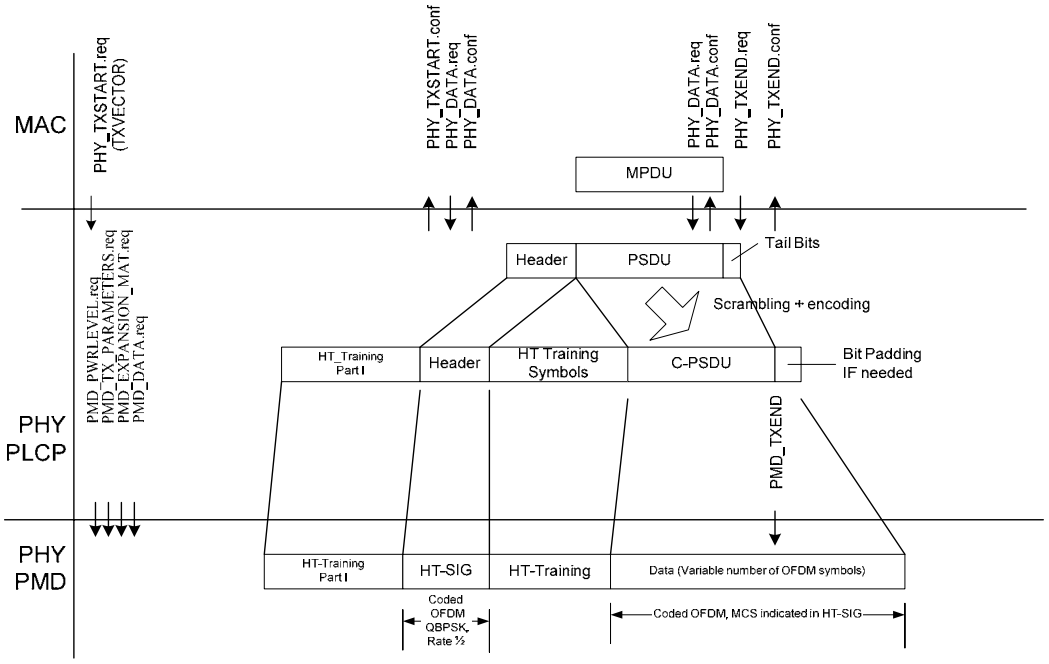

Figure n68 - PLCP Transmit State Machine

Copyright © 2006 IEEE. All rights reserved.
This is an unapproved IEEE Standards Draft, subject to change.

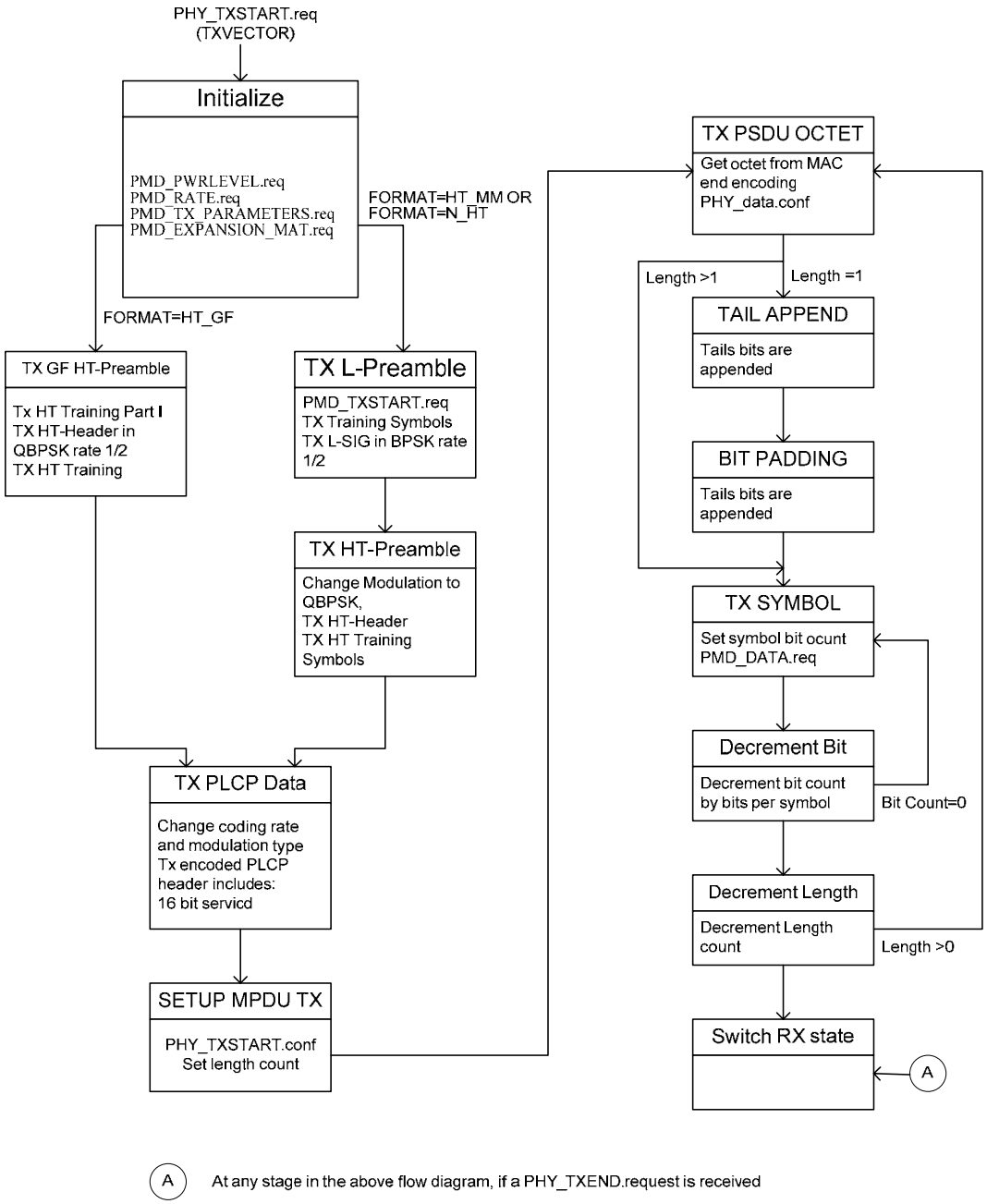

20.3.17 PLCP receive procedure

The receive PLCP procedures are shown in Figure 202, Figure n69 and Figure n70. The receive procedures correspond to Non_HT PLCP format, HT mixed mode format and HT greenfield format In order to receive data, PHY-TXSTART.request shall be disabled so that the PHY entity is in the receive state. Further, through station management (via the PLME) the PHY is set to the appropriate frequency. Other receive parameters, such as RSSI and indicated DATARATE, may be accessed via the PHY-SAP.

Copyright © 2006 IEEE. All rights reserved.
This is an unapproved IEEE Standards Draft, subject to change.

Upon receiving the transmitted PLCP preamble, PMD_RSSI.indicate shall report a significant received signal strength level to the PLCP. This indicates activity to the MAC via PHY_CCA.indicate. PHY_CCA.indicate(BUSY) shall be issued for reception of a signal prior to correct reception of the PLCP initiated and the PLCP IEEE 802.11 SERVICE fields and data shall be received, decoded (a Viterbi decoder is recommended), and checked by ITU-T CRC-32. If the FCS by the ITU-T CRC-32 check fails, the PHY receiver shall return to the RX IDLE state, as depicted in Figure 202. Should the status of CCA return to the IDLE state during reception prior to completion of the full PLCP processing, the PHY receiver shall return to the RX IDLE state. If the PLCP header reception is successful (and the PLCP format, SIGNAL field or HT-SIG field are completely recognizable and supported), a PHY-RXSTART.indicate(RXVECTOR) shall be issued. The RXVECTOR associated with this primitive include the parameters specified in table n137. Also, in this case, the HT PHY will ensure that the CCA shall indicate a busy medium for the intended duration of the transmitted frame, as indicated by the LENGTH field.

The received PSDU bits are assembled into octets, decoded, and presented to the MAC using a series of PHY-DATA.indicate(DATA) primitive exchanges. The rate change indicated in the IEEE 802.11 SIGNAL or the MCS indicated in HT-SIG field shall be initiated from the SERVICE field data of the PLCP header, as described in 20.3.2. The number of PSDU octets is indicted in the LENGTH field of the L-SIG in a non-HT PLCP and in the LENGTH field of the HT-SIG in a HT mixed or HT Greenfield PLCP. The PHY shall proceed with PSDU reception. After the reception of the final bit of the last PSDU octet the receiver shall be returned to the RX IDLE state, as shown in Figure 202. A PHY-RXEND.indicate(NoError) primitive shall be issued.

In the event that a change in the RSSI causes the status of the CCA to return to the IDLE state before the complete reception of the PSDU, as indicated by the PDSU length, the error condition PHYRXEND.indicate(CarrierLost) shall be reported to the MAC. The HT PHY will ensure that the CCA indicates a busy medium for the intended duration of the transmitted packet.

If the indicated rate in the SIGNAL field or the MCS or the ADVANCED_CODING or the STBC in the HT-SIG field is not receivable, a PHY-RXSTART.indicate will not be issued. The PHY shall issue the error condition PHY-RXEND.indicate(UnsupportedRate). If the PLCP header is receivable, but the parity check of the L-header or the CRC check of the header is not valid, a PHY-RXSTART.indicate will not be issued. The PHY shall issue the error condition PHY-RXEND.indicate(FormatViolation).

Any data received after the indicated data length are considered pad bits (to fill out an OFDM symbol) and should be discarded.

A typical state machine implementation of the receive PLCP is given in Figure n71.

Figure n69 - PLCP Receive procedure for mixed mode PLCP format

Copyright © 2006 IEEE. All rights reserved.
This is an unapproved IEEE Standards Draft, subject to change.

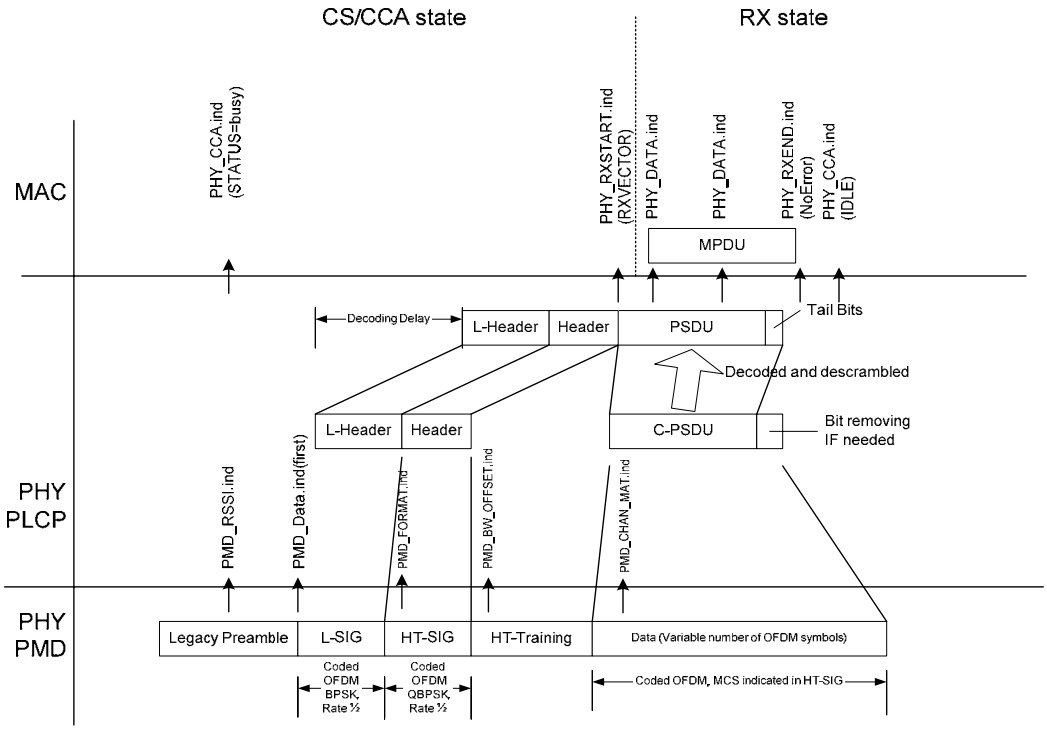

Figure n70 - PLCP Receive procedure for Greenfield format PLCP

Copyright © 2006 IEEE. All rights reserved.
This is an unapproved IEEE Standards Draft, subject to change.

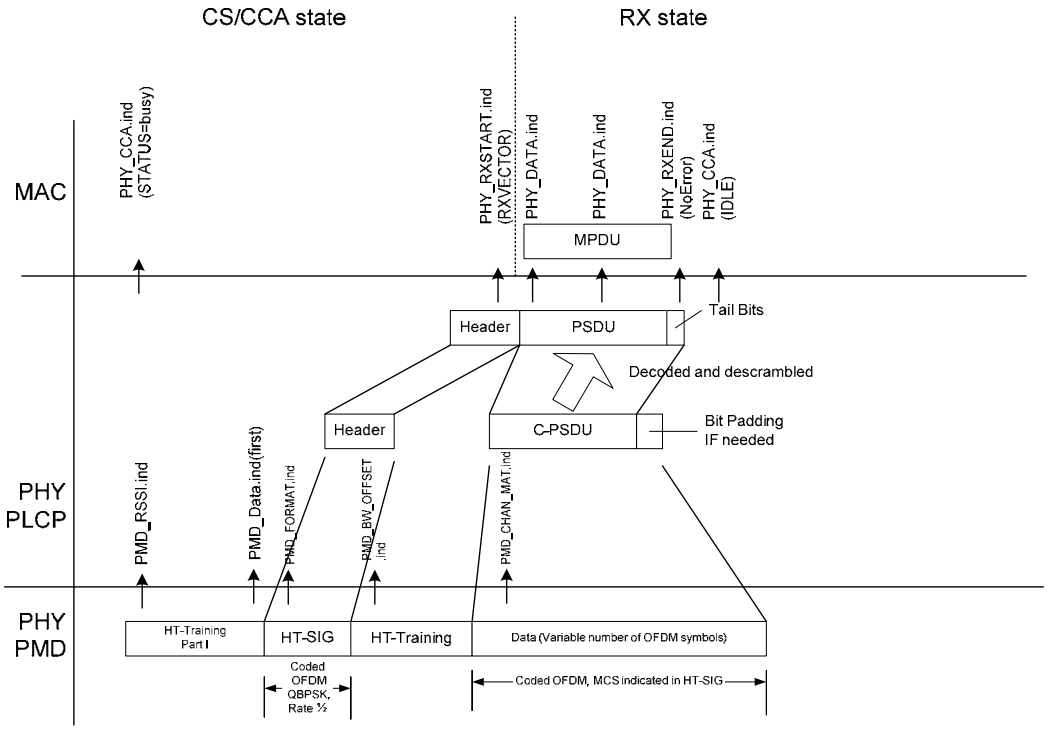

Figure n71 -PLCP Receive State Machine

Copyright © 2006 IEEE. All rights reserved.
This is an unapproved IEEE Standards Draft, subject to change.

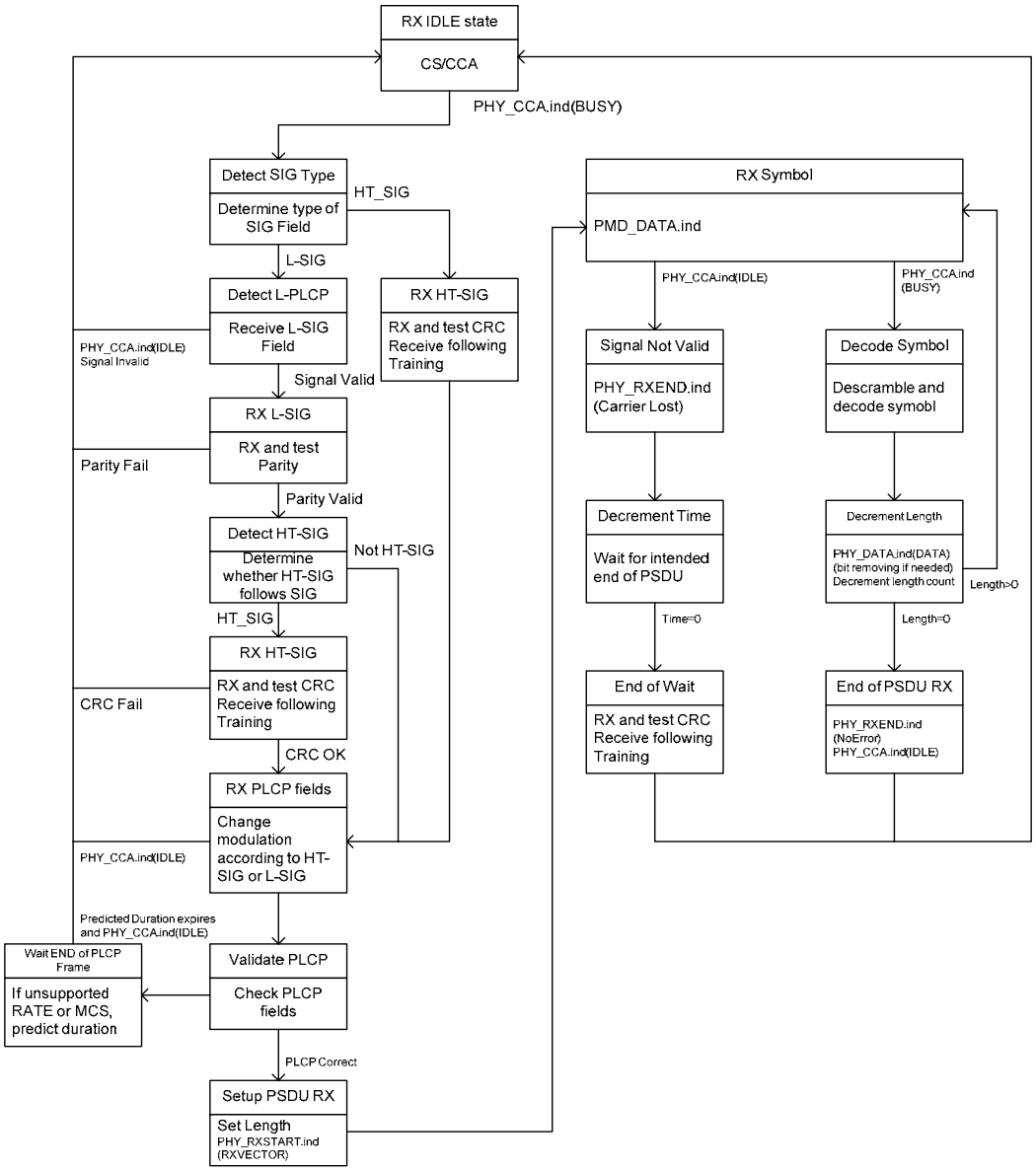

20.4 High Throughput PLME

20.4.1 PLME_SAP sublayer management primitives

Table TBD lists the MIB attributes that may be accessed by the PHY entities and the intralayer of higher level LMEs. These attributes are accessed via the PLME-GET, PLME-SET, PLME-RESET, and PLMECHARACTERISTICS primitives defined in 10.4.

Copyright © 2006 IEEE. All rights reserved.
This is an unapproved IEEE Standards Draft, subject to change.

20.4.2 PHY management information base

High Throughput PHY MIB attributes are defined in Annex D with specific values defined in Table n82.

Table n82 – HT PHY MIB attributes

Managed Object	Default value/range	Operational Semantics
dot11 PHY Operation Table		
dot11PHYType	HT (X'07')	Static
dot11CurrentRegDomain	Implementation dependent	Static
dot11TempType	Implementation dependent	Static
dot11 PHY Antenna Table		
dot11CurrentTxAntenna	Implementation dependent	Static
dot11DiversitySupport	Implementation dependent	Static
dot11CurrentRxAntenna	Implementation dependent	Dynamic
dot11AntennaSelectionOptionImplemented	False/Boolean	Static
dot11TransmitExplicitCSIFeedbackASOptionImplemented	False/Boolean	Static
dot11TransmitIndicesFeedbackASOptionImplemented	False/Boolean	Static
dot11ExplicitCSIFeedbackASOptionImplemented	False/Boolean	Static
dot11TransmitIndicesComputationFeedbackASOptionImplemented	False/Boolean	Static
dot11ReceiveAntennaSelectionASSOptionImplemented	False/Boolean	Static
dot11TransmitSoundingPPDUOptionImplemented	False/Boolean	Static
dot11 PHY Tx Power Table		
dot11NumberSupportedPowerLevels	Implementation dependent	Static
dot11TxPowerLevel1	Implementation dependent	Static
dot11TxPowerLevel2	Implementation dependent	Static
dot11TxPowerLevel3	Implementation dependent	Static
dot11TxPowerLevel4	Implementation dependent	Static
dot11TxPowerLevel5	Implementation dependent	Static
dot11TxPowerLevel6	Implementation dependent	Static
dot11TxPowerLevel7	Implementation dependent	Static
dot11TxPowerLevel8	Implementation dependent	Static
dot11CurrentTxPowerLevel	Implementation dependent	Dynamic
Dot11 Phy DSSS Table		
dot11CurrentChannel	Implementation dependent	Dynamic
dot11 Reg Domains Supported Table		
dot11RegDomainsSupported	Implementation dependent	Static
dot11FrequencyBandsSupported	Implementation dependent	Static
dot11 PHY Antennas List Table		
dot11SupportedTxAntenna	Implementation dependent	Dynamic
dot11SupportedRxAntenna	Implementation dependent	Static
dot11DiversitySelectionRx	Implementation dependent	Dynamic
dot11 Supported Data Rates Tx Table		
dot11SupportedDataratesTxValue	X'02' = 1 Mbit/s (2.4) X'04' = 2 Mbit/s (2.4) X'0B' = 5.5 Mbit/s (2.4) X'16' = 11 Mbit/s (2.4) X'0C' = 6 Mbit/s X'12' = 9 Mbit/s X'18' = 12 Mbit/s X'24' = 18 Mbit/s X'2C = 22 Mbit/s X'30' = 24 Mbit/s X'42 = 33 Mbit/s X'48' = 36 Mbit/s X'60' = 48 Mbit/s X'6C' = 54 Mbit/s	Static
dot11 Supported Data Rates Rx Table		
dot11SupportedDataratesRxValue	X'02' = 1 Mbit/s (2.4)	Static

Copyright © 2006 IEEE. All rights reserved.
This is an unapproved IEEE Standards Draft, subject to change.

Managed Object	Default value/range	Operational Semantics
	X'04' = 2 Mbit/s (2.4) X'0B' = 5.5 Mbit/s (2.4) X'16' = 11 Mbit/s (2.4) X'0C' = 6 Mbit/s X'12' = 9 Mbit/s X'18' = 12 Mbit/s X'24' = 18 Mbit/s X'2C = 22 Mbit/s X'30' = 24 Mbit/s X'42 = 33 Mbit/s X'48' = 36 Mbit/s X'60' = 48 Mbit/s X'6C' = 54 Mbit/s	
dot11 HRDSSS PHY Table		
dot11ShortPreambleOptionImplemented	True	Static
dot11PBCCOptionImplemented	Implementation dependent	Static
dot11ChannelAgilityPresent	Implementation dependent	Static
dot11ChannelAgilityEnabled	Implementation dependent	Dynamic
dot11 PHY OFDM Table		
dot11CurrentFrequency	Implementation dependent	Dynamic
dot11TIThreshold	Implementation dependent	Dynamic
dot11 Channel starting factor	Implementation dependent	Dynamic
dot11 PHY ERP Table		
dot11ERP-PBCCOptionImplemented	Implementation dependent	Static
dot11DSSS-OFDMOptionImplemented	Implementation dependent	Static
dot11DSSS-OFDMOptionEnabled	Implementation dependent	Dynamic
dot11ShortSlotTimeOptionImplemented	Implementation dependent	Static
dot11ShortSlotTimeOptionEnabled	Implementation dependent	Dynamic
dot11 PHY HT Table		
dot11FortyMHzOperationImplemented	False/Boolean	Static
dot11FortyMHzOperationEnabled	False/Boolean	Dynamic
dot11CurentControlChannel	Implementation dependent	Dynamic
dot11CurentControlChannel	Implementation dependent	Dynamic
dot11ExtensionChannelCCAOptionImplemented	False/Boolean	Static
dot11NumberOfSpatialStreamsImplemented	Implementation dependent	Static
dot11NumberOfSpatialStreamsEnabled	Implementation dependent	Static
dot11GreenfieldOptionImplemented	False/Boolean	Static
dot11GreenfieldOptionEnabled	False/Boolean	Dynamic
dot11ShortGIOptionInTwentyImplemented	False/Boolean	Static
dot11ShortGIOptionInTwentyEnabled	False/Boolean	Dynamic
dot11ShortGIOptionInFortyImplemented	False/Boolean	Static
dot11ShortGIOptionInFortyEnabled	False/Boolean	Dynamic
dot11AdvancedCodingOptionImplemented	False/Boolean	Static
dot11AdvancedCodingOptionEnabled	False/Boolean	Dynamic
dot11TxSTBCOptionImplemented	False/Boolean	Static
dot11TxSTBCOptionEnabled	False/Boolean	Dynamic
dot11RxSTBCOptionImplemented	False/Boolean	Static
dot11RxSTBCOptionEnabled	False/Boolean	Dynamic
dot11BeamFormingOptionImplemented	False/Boolean	Static
dot11BeamFormingOptionEnabled	False/Boolean	Dynamic
dot11 Supported MCS Tx Table		
dot11SupportedMCSTxValue	MCS 0-76 for 20 MHz; MCS 0-76 for 40 MHz (MCS 0-15 for 20 MHz mandatory)	Static
dot11 Supported MCS Rx Table		
dot11SupportedMCSRxValue	MCS 0-76 for 20 MHz; MCS 0-76 for 40 MHz (MCS 0-15 for 20 MHz mandatory)	Static
dot11 Tx BF Config Table		
dot11ReceiveStaggerSoundingOptionImplemented	False/Boolean	Static
dot11TransmitStaggerSoundingOptionImplemented	False/Boolean	Static
dot11ReceiveZLFOptionImplemented	False/Boolean	Static

Copyright © 2006 IEEE. All rights reserved.
This is an unapproved IEEE Standards Draft, subject to change.

Managed Object	Default value/range	Operational Semantics
dot11TransmitZLFOptionImplemented	False/Boolean	Static
dot11ImplicitTxBFOptionImplemented	False/Boolean	Static
dot11CalibrationOptionImplemented	Implementation dependent	Static
dot11ExplicitCSITxBFOptionImplemented	False/Boolean	Static
dot11ExplicitUncompressedSteeringMatrixOptionImplemented	False/Boolean	Static
dot11ExplicitBFCSIFeedbackOptionImplemented	Implementation dependent	Static
dot11ExplicitUncompressedSteeringMatrixFeedbackOptionImplemented	Implementation dependent	Static
dot11ExplicitCompressedSteeringMatrixFeedbackOptionImplemented	Implementation dependent	Static
dot11NumberBeamFormingCSISupportAntenna	Implementation dependent	Static
dot11NumberUncompressedSteeringMatrixSupportAntenna	Implementation dependent	Static
dot11NumberCompressedSteeringMatrixSupportAntenna	Implementation dependent	Static

20.4.3 TXTIME calculation

The value of the TXTIME parameter returned by the PLME-TXTIME.confirm primitive shall be calculated for mixed mode format according to the Equation (20-72) and Equation (20-73) for short and regular GI, and for greenfield format according to Equation (20-74) and Equation (20-75) for short and regular GI respectively:

$$\mathrm{TXTIME} = \mathrm{T_{LEG\_PREAMBLE}} + \mathrm{T_{L\_SIG}} + \mathrm{T_{HT\_PREAMBLE}} + \mathrm{T_{HT\_SIG}} + \mathrm{T_{SYM}} \times \mathrm{Ceiling}\left(\frac{\mathrm{T_{SYMS}} \times \mathrm{N_{SYM}}}{\mathrm{T_{SYM}}}\right) \tag{20-72}$$

$$\mathrm{TXTIME} = \mathrm{T_{LEG\_PREAMBLE}} + \mathrm{T_{L\_SIG}} + \mathrm{T_{HT\_PREAMBLE}} + \mathrm{T_{HT\_SIG}} + \mathrm{T_{SYM}} \times \mathrm{N_{SYM}} \tag{20-73}$$

$$\mathrm{TXTIME} = \mathrm{T_{GF\_HT\_PREAMBLE}} + \mathrm{T_{HT\_SIG}} + \mathrm{T_{SYMS}} \times \mathrm{N_{SYM}} \tag{20-74}$$

$$\mathrm{TXTIME} = \mathrm{T_{GF\_HT\_PREAMBLE}} + \mathrm{T_{HT\_SIG}} + \mathrm{T_{SYM}} \times \mathrm{N_{SYM}} \tag{20-75}$$

where

$\mathrm{T_{LEG\_PREAMBLE}} = T_{L-STF} + T_{L-LTF}$ is the duration of the legacy preamble,

$\mathrm{T_{HT\_PREAMBLE}}$ is the duration of the HT preamble in mixed mode. This duration is $T_{HT-LTF1} + (N_{LTF} - 1)T_{HT-LTFs}$,

Copyright © 2006 IEEE. All rights reserved.
This is an unapproved IEEE Standards Draft, subject to change.

$T_{GF\_HT\_PREAMBLE} = T_{HT\_PREAMBLE} + T_{HT-STF} + T_{HT-LTF1}$ is the duration of the preamble in GF mode,

T_{SYM}, T_{SYMS}, T_{HT-SIG}, T_{L-STF}, T_{HT-STF}, T_{L-LTF}, $T_{HT-LTF1}$ and $T_{HT-LTFs}$ are defined Table n62**,**

N_{SYM} is the total number of data symbols in the data portion, which may be calculated according to the Equation (20-76):

$$N_{SYM} = \begin{cases} m_{STBC} \times \text{ceiling}\left(\dfrac{8 \cdot length + 16 + 6 \cdot N_{ES}}{m_{STBC} \cdot N_{DBPS}}\right) & \text{When BCC is used} \\ N_{avbits} / N_{CBPS} & \text{When LDPC is used} \end{cases} \quad (20\text{-}76)$$

where

length is the number of octets in the data portion of the PPDU;

m_{STBC} is equal to 2 when space time block code (STBC) is used, and otherwise 1;

N_{ES} ,$N_{DBPS,}$ and N_{CBPS} are defined in Table n63;

N_{avbits} is defined in Equation (20-29)

20.4.4 PHY characteristics

The static HT PHY characteristics, provided through the PLME-CHARACTERISTICS service primitive, are shown in Table n83. The definitions for these characteristics are given in 10.4.

Table n83—MIMO PHY characteristics

Characteristics	Value
aSlotTime	9 µs
aSIFSTime	16 µs
aCCATime	< 4 µs
aPHY-RX-START-Delay	56 µs
aRxTxTurnaroundTime	< 2 µs
aTxPLCPDelay	Implementation dependent
aRxPLCPDelay	Implementation dependent

Copyright © 2006 IEEE. All rights reserved.
This is an unapproved IEEE Standards Draft, subject to change.

aRxTxSwitchTime	<< 1 µs
aTxRampOnTime	Implementation dependent
aTxRampOffTime	Implementation dependent
aTxRFDelay	Implementation dependent
aRxRFDelay	Implementation dependent
aAirPropagationTime	<< 1 µs
aMACProcessingDelay	< 2 µs
aPreambleLength	16 µs
aSTFOneLength	8 µs
aSTFTwoLength	4 µs
aLTFOneLength	8 µs
aLTFTwoLength	4 µs
aPLCPHeaderLength	4 µs
aPLCPHeaderTwoLength	8 µs
aPSDUMaxLength	65535
aCWmin	15
aCWmax	1023

The HT PHY introduces these new characteristics:

— aSTFOneLength is the length of the Legacy Short Training Field

— aSTFTwoLength is the length of the High Throughput Short Training Field

— aLTFOneLength is the length of the First High Throughput Long Training Field

— aLTFTwoLength is the length of the Additional High Throughput Long Training Fields.

— The aPLCPHeaderTwoLength is the length of the High Throughput Signal Field.

20.5 High Throughput PMD sublayer

20.5.1 Scope and field of application

Copyright © 2006 IEEE. All rights reserved.
This is an unapproved IEEE Standards Draft, subject to change.

This subclause describes the PMD services provided to the PLCP for the High Throughput (HT) PHY. Also defined in this subclause are the functional, electrical, and RF characteristics required for interoperability of implementations conforming to this specification. The relationship of this specification to the entire High Throughput PHY is shown in Figure n72.

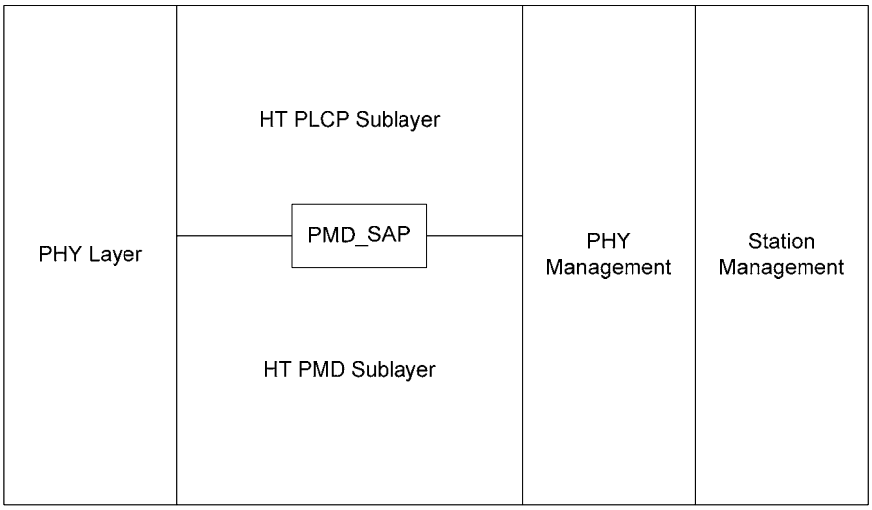

Figure n72 - PMD layer reference model

20.5.2 Overview of service

The High Throughput PMD sublayer accepts PLCP sublayer service primitives and provides the actual means by which data are transmitted or received from the medium. The combined function of the High Throughput PMD sublayer primitives and parameters for the receive function results in a data stream, timing information, and associated receive signal parameters being delivered to the PLCP sublayer. A similar functionality is provided for data transmission.

20.5.3 Overview of interactions

The primitives associated with the IEEE 802.11 PLCP sublayer to the High Throughput PMD fall into two basic categories:

a) Service primitives that support PLCP peer-to-peer interactions;

b) Service primitives that have local significance and support sublayer-to-sublayer interactions.

20.5.4 Basic service and options

All of the service primitives described in this subclause are considered mandatory, unless otherwise specified.

Copyright © 2006 IEEE. All rights reserved.
This is an unapproved IEEE Standards Draft, subject to change.

20.5.4.1 PMD_SAP peer-to-peer service primitives

Table n84 indicates the primitives for peer-to-peer interactions.

Table n84—PMD_SAP peer-to-peer service primitives

Primitive	Request	Indicate	Confirm	Response
PMD_DATA	X	X	—	—

20.5.4.2 PMD_SAP sublayer-to-sublayer service primitives

Table n85 indicates the primitives for sublayer-to-sublayer interactions.

Table n85—PMD_SAP sublayer-to-sublayer service primitives

Primitive	Request	Indicate	Confirm	Response
PMD_TXSTART	X	—	—	—
PMD_TXEND	X	—	—	—
PMD_TXPWRLVL	X	—	—	—
PMD_RATE	X	—	—	—
PMD_TX_PARAMETERS	X	—	—	—
PMD_EXPANSIONS_MAT	X	—	—	—
PMD_RSSI	—	X	—	—
PMD_RCPI	—	X	—	—
PMD_CHAN_MAT	—	X	—	—
PMD_FORMAT	—	X	—	—
PMD_BW_OFFSET	—	X	—	—

20.5.4.3 PMD_SAP service primitive parameters

Table n86 shows the parameters used by one or more of the PMD_SAP service primitives.

Table n86—List of parameters for the PMD primitives

Parameter	Associate primitive	Value
TXD_UNIT	PMD_DATA.request	One(1), Zero(0): one OFDM symbol value

Copyright © 2006 IEEE. All rights reserved.
This is an unapproved IEEE Standards Draft, subject to change.

RXD_UNIT	PMD_DATA.indicate	One(1), Zero(0): one OFDM symbol value
TXPWR_LEVEL	PMD_TXPWRLVL.request	1–8 (max of 8 levels)
RATE	PMD_RATE.request	12 Mbit/s (for BPSK) 24 Mbit/s (for QPSK) 48 Mbit/s (for 16-QAM) 72 Mbit/s (for 64-QAM)
MCS	PMD_TX_PARAMETERS.request	0-77, MCS index defined in tables n76-n90.
BW	PMD_TX_PARAMETERS.request PMD_BW_OFFSET.indicate	0 -HT_BW20 – 20MHz , 1 - HT_BW40 – 40MHz, 2 - HT_BW_20DL – Duplicate Legacy 3 - HT_BW_20DH – Duplicate HT
CH_OFFSET	PMD_TX_PARAMETERS.request PMD_BW_OFFSET.indicate	0 – CH_OFF_40 – The whole 40Mhz 1 – CH_OFF_20U – Upper 20Mhz in 40Mhz 3 – CH_OFF_20L – Lower 20MHz in 40Mhz
STBC	PMD_TX_PARAMETERS.request	Indicates the difference between either the number of space time streams NSTS and the number of spatial streams NSS indicated by the MCS 00 – No STBC (NSTS=NSS)
SHORT_GI	PMD_TX_PARAMETERS.request	0 – Short GI is not used in the packet 1 – Short GI is used in the packet
ANTENNA_SET	PMD_TX_PARAMETERS.request	Bit field with 8 bits
EXPANSION_MAT	PMD_EXPANSIONS_MAT.request	$(N_{SD} + N_{SP})$ complex matrices of size $N_{TX} \times N_{STS}$

Copyright © 2006 IEEE. All rights reserved.
This is an unapproved IEEE Standards Draft, subject to change.

RSSI	PMD_RSSI.indicate	0–8 bits of RSSI
RCPI	PMD_RCPI.indicate	0–8 bits of RCPI
CHAN_MAT	PMD_CHAN_MAT.indicate	$(N_{SD} + N_{SP})$ complex matrices of size $N_{RX} \times N_{STS}$
FORMAT	PMD_FORMAT.indicate	0 - NON_HT 1 - HT_MM 2 - HT_GF

20.5.5 PMD_SAP detailed service specification

This subclause describes the services provided by each PMD primitive.

20.5.5.1 PMD_DATA.request

20.5.5.1.1 Function

This primitive defines the transfer of data from the PLCP sublayer to the PMD entity.

20.5.5.1.2 Semantic of the service primitive

This primitive shall provide the following parameters: PMD_DATA.request (TXD_UNIT)

The TXD_UNIT parameter shall be the n-bit combination of 0 and 1 for one symbol of OFDM modulation. If the length of a coded PSDU (C-PSDU) is shorter than n bits, 0 bits are added to form an OFDM symbol. This parameter represents a single block of data which, in turn, shall be used by the PHY to be encoded into an OFDM transmitted symbol.

20.5.5.1.3 When generated

This primitive shall be generated by the PLCP sublayer to request transmission of one OFDM symbol. The data clock for this primitive shall be supplied by the PMD layer based on the OFDM symbol clock.

20.5.5.1.4 Effect of receipt

The PMD performs transmission of the data.

Copyright © 2006 IEEE. All rights reserved.
This is an unapproved IEEE Standards Draft, subject to change.

20.5.5.2 PMD_DATA.indicate

20.5.5.2.1 Function

This primitive defines the transfer of data from the PMD entity to the PLCP sublayer.

20.5.5.2.2 Semantic of the service primitive

This primitive shall provide the following parameters: PMD_DATA.indicate(RXD_UNIT)

The RXD_UNIT parameter shall be 0 or 1, and shall represent either a signal field bit or a data field bit after the decoding of the convolutional code by the PMD entity.

20.5.5.2.3 When generated

This primitive, generated by the PMD entity, forwards received data to the PLCP sublayer. The data clock for this primitive shall be supplied by the PMD layer based on the OFDM symbol clock.

20.5.5.2.4 Effect of receipt

The PLCP sublayer interprets the bits that are recovered as part of the PLCP or passes the data to the MAC sublayer as part of the PSDU.

20.5.5.3 PMD_TXSTART.request

20.5.5.3.1 Function

This primitive, generated by the PHY PLCP sublayer, initiates PPDU transmission by the PMD layer.

20.5.5.3.2 Semantic of the service primitive

This primitive shall provide the following parameters: PMD_TXSTART.request

20.5.5.3.3 When generated

This primitive shall be generated by the PLCP sublayer to initiate the PMD layer transmission of the PPDU. The PHY-TXSTART.request primitive shall be provided to the PLCP sublayer prior to issuing the PMD_TXSTART command.

20.5.5.3.4 Effect of receipt

PMD_TXSTART initiates transmission of a PPDU by the PMD sublayer.

20.5.5.4 PMD_TXEND.request

Copyright © 2006 IEEE. All rights reserved.
This is an unapproved IEEE Standards Draft, subject to change.

20.5.5.4.1 Function

This primitive, generated by the PHY PLCP sublayer, ends PPDU transmission by the PMD layer.

20.5.5.4.2 Semantic of the service primitive

This primitive shall provide the following parameters: PMD_TXEND.request

20.5.5.4.3 When generated

This primitive shall be generated by the PLCP sublayer to terminate the PMD layer transmission of the PPDU.

20.5.5.4.4 Effect of receipt

PMD_TXEND terminates transmission of a PPDU by the PMD sublayer.

20.5.5.5 PMD_TXPWRLVL.request

20.5.5.5.1 Function

This primitive, generated by the PHY PLCP sublayer, selects the power level used by the PHY for transmission.

20.5.5.5.2 Semantic of the service primitive

This primitive shall provide the following parameters: PMD_TXPWRLVL.request (TXPWR_LEVEL)

TXPWR_LEVEL selects which of the transmit power levels should be used for the current packet transmission. The number of available power levels shall be determined by the MIB parameter aNumberSupportedPowerLevels. See 20.3.9.1 for further information on the OFDM PHY power level control capabilities.

20.5.5.5.3 When generated

This primitive shall be generated by the PLCP sublayer to select a specific transmit power. This primitive shall be applied prior to setting PMD_TXSTART into the transmit state.

20.5.5.5.4 Effect of receipt

PMD_TXPWRLVL immediately sets the transmit power level to that given by TXPWR_LEVEL.

20.5.5.6 PMD_RATE.request

20.5.5.6.1 Function

Copyright © 2006 IEEE. All rights reserved.
This is an unapproved IEEE Standards Draft, subject to change.

This primitive, generated by the PHY PLCP sublayer, selects the modulation rate that shall be used by the OFDM PHY for transmission.

20.5.5.6.2 Semantic of the service primitive

This primitive shall provide the following parameters: PMD_RATE.request(RATE)

RATE selects which of the OFDM PHY data rates shall be used for PPDU transmission. See 20.3.8.6 for further information on the OFDM PHY modulation rates. The OFDM PHY rate change capability is described in detail in 20.3.7.

20.5.5.6.3 When generated

This primitive shall be generated by the PLCP sublayer to change or set the current OFDM PHY modulation rate used for the PSDU portion of a PPDU.

20.5.5.6.4 Effect of receipt

The receipt of PMD_RATE selects the rate that shall be used for all subsequent PSDU transmissions. This rate shall be used for transmission only. The OFDM PHY shall still be capable of receiving all the required OFDM PHY modulation rates.

20.5.5.7 PMD_RSSI.indicate

20.5.5.7.1 Function

This primitive, generated by the PMD sublayer, provides the receive signal strength to the PLCP and MAC entity.

20.5.5.7.2 Semantic of the service primitive

This primitive shall provide the following parameters: PMD_RSSI.indicate (RSSI)

The RSSI shall be a measure of the RF energy received by the OFDM PHY. RSSIs of up to 8 bits (256 levels) are supported.

20.5.5.7.3 When generated

This primitive shall be generated by the PMD when the OFDM PHY is in the receive state. It shall be available continuously to the PLCP which, in turn, shall provide the parameter to the MAC entity.

20.5.5.7.4 Effect of receipt

This parameter shall be provided to the PLCP layer for information only. The RSSI may be used as part of a CCA scheme.

20.5.5.8 PMD_RCPI.indicate

Copyright © 2006 IEEE. All rights reserved.
This is an unapproved IEEE Standards Draft, subject to change.

20.5.5.8.1 Function

This primitive, generated by the PMD sublayer, provides the received channel power indicator to the PLCPand MAC entity.

20.5.5.8.2 Semantics of the service primitive

The primitive shall provide the following parameter: PMD_RCPI.indicate(RCPI).

The RCPI shall be a measure of the channel power received by the OFDM PHY. RCPI indications of 8 bits are supported.

20.5.5.8.3 When generated

This primitive shall be generated by the PMD when the OFDM PHY is in the receive state. It shall be continuously available to the PLCP, which, in turn, provides the parameter to the MAC entity.

20.5.5.8.4 Effect of receipt

This parameter shall be provided to the PLCP layer for information only. The RCPI may be used in conjunction with RSSI to measure input signal quality.

20.5.5.9 PMD_TX_PARAMETERS.request

20.5.5.9.1 Function

This primitive, generated by the PHY PLCP sublayer, selects the related parameters used by the PHY for transmission.

20.5.5.9.2 Semantic of the service primitive

This primitive shall provide the following parameters:

PMD_TX_PARAMETERS.request (MCS, BW, CH_OFFSET, STBC, SHORT_GI, ANTENNA_SET)

20.5.5.9.3 When generated

This primitive shall be generated by the PLCP sublayer to select a specific transmit parameters. This primitive shall be applied prior to setting PMD_TXSTART into the transmit state.

20.5.5.9.4 Effect of receipt

PMD_TX_PARAMETERS immediately sets the transmit parameters. The receipt of these parameters selects the values that shall be used for all subsequent PPDU transmissions

20.5.5.10 PMD_EXPANSIONS_MAT.request

Copyright © 2006 IEEE. All rights reserved.
This is an unapproved IEEE Standards Draft, subject to change.

20.5.5.10.1 Function

This primitive, generated by the PHY PLCP sublayer, defines the steering matrices used by the PHY for transmission.

20.5.5.10.2 Semantic of the service primitive

This primitive shall provide the following parameters:

PMD_EXPANSIONS_MAT.request (EXPANSION_MAT)

EXPANSION_MAT selects which steering matrices should be used for the current packet transmission.

20.5.5.10.3 When generated

This primitive shall be generated by the PLCP sublayer to define specific steering matrices. This primitive shall be applied prior to setting PMD_TXSTART into the transmit state.

20.5.5.10.4 Effect of receipt

PMD_EXPANSIONS_MAT immediately sets the transmission steering matrices to that given by EXPANSION_MAT. The receipt of PMD_EXPANSIONS_MAT selects the steering matrices that shall be used for all subsequent PPDU transmissions.

20.5.5.11 PMD_BW_OFFSET.indicate

20.5.5.11.1 Function

This primitive, generated by the PMD sublayer, provides the bandwith and channel offset of the received frame to the PLCP and MAC entity.

20.5.5.11.2 Semantic of the service primitive

This primitive shall provide the following parameters: PMD_BW_OFFSET.indicate (BW, CH_OFFSET)

The bandwith represents channel with (20MHz or 40MHz) and the transmission's modes (duplicate legacy or duplicate HT). The channel offset represents in which 20MHz subchannel the frame is received (upper or lower).

20.5.5.11.3 When generated

This primitive shall be generated by the PMD when the OFDM PHY is in the receive state. It shall be available continuously to the PLCP which, in turn, shall provide the parameter to the MAC entity.

20.5.5.11.4 Effect of receipt

The PLCP sublayer passes the data to the MAC sublayer as part of the RXVECTOR.

Copyright © 2006 IEEE. All rights reserved.
This is an unapproved IEEE Standards Draft, subject to change.

20.5.5.12 PMD_CHAN_MAT.indicate

20.5.5.12.1 Function

This primitive, generated by the PMD sublayer, provides the channel response matrices to the PLCP and MAC entity.

20.5.5.12.2 Semantic of the service primitive

This primitive shall provide the following parameters: PMD_CHAN_MAT.indicate (CHAN_MAT)

The CHAN_MAT parameter contains the channel response matrices that were measured during the reception of the current frame.

20.5.5.12.3 When generated

This primitive shall be generated by the PMD when the OFDM PHY is in the receive state. It shall be available continuously to the PLCP which, in turn, shall provide the parameter to the MAC entity.

20.5.5.12.4 Effect of receipt

The PLCP sublayer passes the data to the MAC sublayer as part of the RXVECTOR.

20.5.5.13 PMD_FORMAT.indicate

20.5.5.13.1 Function

This primitive, generated by the PMD sublayer, provides the format of the received frame to the PLCP and MAC entity.

20.5.5.13.2 Semantic of the service primitive

This primitive shall provide the following parameters: PMD_FORMAT.indicate (FORMAT).

The format indicates one of the PPDU formats: non HT, mixed mode format or greenfield.

20.5.5.13.3 When generated

This primitive shall be generated by the PMD when the OFDM PHY is in the receive state. It shall be available continuously to the PLCP which, in turn, shall provide the parameter to the MAC entity.

20.5.5.13.4 Effect of receipt

The PLCP sublayer passes the data to the MAC sublayer as part of the RXVECTOR.

Copyright © 2006 IEEE. All rights reserved.
This is an unapproved IEEE Standards Draft, subject to change.

20.6 Optional Features

This subclause assembles the main features that are optional

- Green Field mode is optional at both receive and transmit
- Short GI is optional at both receive and transmit
- STBC is optional at both receive and transmit
- Beamforming is optional at both receive and transmit
- 40MHz Channel processing is optional at both transmit and receive.

20.7 Rate Dependent Parameters for High Throughput Modulation and Coding Schemes (MCS)

Table n87 Symbols used in rate dependent parameter tables

Symbol	Explanation
N_{SS}	Number of spatial streams
R	Code rate
N_{BPSC}	Number of coded bits per single carrier
N_{SD}	Number of data subcarriers
N_{SP}	Number of pilot subcarriers
N_{CBPS}	Number of coded bits per symbol
N_{DBPS}	Number of data bits per symbol
N_{ES}	Number of FEC encoders

Table n88 – Rate dependent parameters for mandatory 20 MHz, N_{SS} =1 modes. N_{ES} = 1.

MCS Index	Modulation	R	N_{BPSC}	N_{SD}	N_{SP}	N_{CBPS}	N_{DBPS}	Data rate (Mbps)	
								800ns GI	400ns GI[1]
0	BPSK	½	1	52	4	52	26	6.5	7.2
1	QPSK	½	2	52	4	104	52	13.0	14.4
2	QPSK	¾	2	52	4	104	78	19.5	21.7

Copyright © 2006 IEEE. All rights reserved.
This is an unapproved IEEE Standards Draft, subject to change.

3	16-QAM	½	4	52	4	208	104	26.0	28.9
4	16-QAM	¾	4	52	4	208	156	39.0	43.3
5	64-QAM	2/3	6	52	4	312	208	52.0	57.8
6	64-QAM	¾	6	52	4	312	234	58.5	65.0
7	64-QAM	5/6	6	52	4	312	260	65.0	72.2

[1]Support of 400 ns guard interval is optional on transmit and receive.

Copyright © 2006 IEEE. All rights reserved.
This is an unapproved IEEE Standards Draft, subject to change.

Table n89—Rate-dependent parameters for optional 20 MHz, N_{SS} = 2 modes. N_{ES} = 1.

MCS Index	Modulation	R	N_{BPSC}	N_{SD}	N_{SP}	N_{CBPS}	N_{DBPS}	Data rate (Mbps)	
								800ns GI	400ns GI
8	BPSK	½	1	52	4	104	52	13.0	14.444
9	QPSK	½	2	52	4	208	104	26.0	28.889
10	QPSK	¾	2	52	4	208	156	39.0	43.333
11	16-QAM	½	4	52	4	416	208	52.0	57.778
12	16-QAM	3/4	4	52	4	416	312	78.0	86.667
13	64-QAM	2/3	6	52	4	624	416	104.0	115.556
14	64-QAM	¾	6	52	4	624	468	117.0	130.000
15	64-QAM	5/6	6	52	4	624	520	130.0	144.444

[1]Support of 400 ns guard interval is optional on transmit and receive.

Table n90—Rate-dependent parameters for optional 20 MHz, N_{SS} = 3 modes. N_{ES} = 1.

MCS Index	Modulation	R	N_{BPSC}	N_{SD}	N_{SP}	N_{CBPS}	N_{DBPS}	Data rate (Mbps)	
								800 ns GI	400ns GI
16	BPSK	½	1	52	4	156	78	19.5	21.7
17	QPSK	½	2	52	4	312	156	39.0	43.3
18	QPSK	¾	2	52	4	312	234	58.5	65.0
19	16-QAM	½	4	52	4	624	312	78.0	86.7
20	16-QAM	3/4	4	52	4	624	468	117.0	130.0
21	64-QAM	2/3	6	52	4	936	624	156.0	173.3
22	64-QAM	¾	6	52	4	936	702	175.5	195.0
23	64-QAM	5/6	6	52	4	936	780	195.0	216.7

Copyright © 2006 IEEE. All rights reserved.
This is an unapproved IEEE Standards Draft, subject to change.

Table n91—Rate-dependent parameters for optional 20 MHz, N_{SS} = 4 modes. N_{ES} = 1.

MCS Index	Modulation	R	N_{BPSC}	N_{SD}	N_{SP}	N_{CBPS}	N_{DBPS}	Data rate (Mbps)	
								800 ns GI	400ns GI[1]
24	BPSK	½	1	52	4	208	104	26.0	28.9
25	QPSK	½	2	52	4	416	208	52.0	57.8
26	QPSK	¾	2	52	4	416	312	78.0	86.7
27	16-QAM	½	4	52	4	832	416	104.0	115.6
28	16-QAM	3/4	4	52	4	832	624	156.0	173.3
29	64-QAM	2/3	6	52	4	1248	832	208.0	231.1
30	64-QAM	¾	6	52	4	1248	936	234.0	260.0
31	64-QAM	5/6	6	52	4	1248	1040	260.0	288.9

Table n92—Rate-dependent parameters for optional 40 MHz, N_{SS} = 1 modes. N_{ES} = 1.

MCS Index	Modulation	R	N_{BPSC}	N_{SD}	N_{SP}	N_{CBPS}	N_{DBPS}	Data rate (Mbps)	
								800 ns GI	400ns GI
0	BPSK	½	1	108	6	108	54	13.5	15.0
1	QPSK	½	2	108	6	216	108	27.0	30.0
2	QPSK	¾	2	108	6	216	162	40.5	45.0
3	16-QAM	½	4	108	6	432	216	54.0	60.0
4	16-QAM	3/4	4	108	6	432	324	81.0	90.0
5	64-QAM	2/3	6	108	6	648	432	108.0	120.0
6	64-QAM	¾	6	108	6	648	486	121.5	135.0
7	64-QAM	5/6	6	108	6	648	540	135.0	150.0

Copyright © 2006 IEEE. All rights reserved.
This is an unapproved IEEE Standards Draft, subject to change.

Table n93—Rate-dependent parameters for optional 40 MHz, N_{SS} = 2 modes. N_{ES} = 1.

MCS Index	Modulation	R	N_{BPSC}	N_{SD}	N_{SP}	N_{CBPS}	N_{DBPS}	Data rate (Mbps)	
								800 ns GI	400ns GI
8	BPSK	½	1	108	6	216	108	27.0	30.0
9	QPSK	½	2	108	6	432	216	54.0	60.0
10	QPSK	¾	2	108	6	432	324	81.0	90.0
11	16-QAM	½	4	108	6	864	432	108.0	120.0
12	16-QAM	3/4	4	108	6	864	648	162.0	180.0
13	64-QAM	2/3	6	108	6	1296	864	216.0	240.0
14	64-QAM	¾	6	108	6	1296	972	243.0	270.0
15	64-QAM	5/6	6	108	6	1296	1080	270.0	300.0

Table n94—Rate-dependent parameters for optional 40 MHz, N_{SS} = 3 modes

MCS Index	Modulation	R	N_{BPSC}	N_{SD}	N_{SP}	N_{CBPS}	N_{DBPS}	N_{ES}	Data rate (Mbps)	
									800 ns GI	400ns GI
16	BPSK	½	1	108	6	324	162	1	40.5	45.0
17	QPSK	½	2	108	6	648	324	1	81.0	90.0
18	QPSK	¾	2	108	6	648	486	1	121.5	135.0
19	16-QAM	½	4	108	6	1296	648	1	162.0	180.0
20	16-QAM	3/4	4	108	6	1296	972	1	243.0	270.0
21	64-QAM	2/3	6	108	6	1944	1296	2	324.0	360.0
22	64-QAM	¾	6	108	6	1944	1458	2	364.5	405.0
23	64-QAM	5/6	6	108	6	1944	1620	2	405.0	450.0

Copyright © 2006 IEEE. All rights reserved.
This is an unapproved IEEE Standards Draft, subject to change.

Table n95—Rate-dependent parameters for optional 40 MHz, N_{SS} = 4 modes

MCS Index	Modulation	R	N_{BPSC}	N_{SD}	N_{SP}	N_{CBPS}	N_{DBPS}	N_{ES}	Data rate (Mbps)	
									800 ns GI	400ns GI
24	BPSK	½	1	108	6	432	216	1	54.0	60.0
25	QPSK	½	2	108	6	864	432	1	108.0	120.0
26	QPSK	¾	2	108	6	864	648	1	162.0	180.0
27	16-QAM	½	4	108	6	1728	864	1	216.0	240.0
28	16-QAM	3/4	4	108	6	1728	1296	2	324.0	360.0
29	64-QAM	2/3	6	108	6	2592	1728	2	432.0	480.0
30	64-QAM	¾	6	108	6	2592	1944	2	486.0	540.0
31	64-QAM	5/6	6	108	6	2592	2160	2	540.0	600.0

Table n96—Rate-dependent parameters for optional 40 MHz HT duplicate mode, N_{SS} = 1.
N_{ES} = 1

MCS Index	Modulation	R	N_{BPSC}	N_{SD}	N_{SP}	N_{CBPS}	N_{DBPS}	Data rate (Mbps)	
								800 ns GI	400ns GI
32	BPSK	½	1	96	8	48	24	6.0	6.7

Table n97—Rate-dependent parameters for optional 20 MHz, N_{SS} = 2 modes. N_{ES} = 1

MCS Index	Modulation		R	N_{TBPS}	N_{SD}	N_{SP}	N_{CBPS}	N_{DBPS}	Data rate (Mbps)	
	Stream 1	Stream 2							800 ns GI	400ns GI
33	16-QAM	QPSK	½	6	52	4	312	156	39	43.3
34	64-QAM	QPSK	½	8	52	4	416	208	52	57.8
35	64-QAM	16-QAM	½	10	52	4	520	260	65	72.2
36	16-QAM	QPSK	3/4	6	52	4	312	234	58.5	65.0
37	64-QAM	QPSK	¾	8	52	4	416	312	78	86.7
38	64-QAM	16-QAM	3/4	10	52	4	520	390	97.5	108.3

Copyright © 2006 IEEE. All rights reserved.
This is an unapproved IEEE Standards Draft, subject to change.

Table n98 – Rate dependent parameters for optional 20MHz, N_{SS} = 3 modes. N_{ES} = 1

MCS Index	Modulation			R	N_{TBPS}	N_{SD}	N_{SP}	N_{CBPS}	N_{DBPS}	Data rate (Mbps)	
	Stream 1	Stream 2	Stream 3							800 ns GI	400ns GI
39	16-QAM	QPSK	QPSK	½	8	52	4	416	208	52	57.8
40	16-QAM	16-QAM	QPSK	½	10	52	4	520	260	65	72.2
41	64-QAM	QPSK	QPSK	½	10	52	4	520	260	65	72.2
42	64-QAM	16-QAM	QPSK	½	12	52	4	624	312	78	86.7
43	64-QAM	16-QAM	16-QAM	½	14	52	4	728	364	91	101.1
44	64-QAM	64-QAM	QPSK	½	14	52	4	728	364	91	101.1
45	64-QAM	64-QAM	16-QAM	½	16	52	4	832	416	104	115.6
46	16-QAM	QPSK	QPSK	¾	8	52	4	416	312	78	86.7
47	16-QAM	16-QAM	QPSK	¾	10	52	4	520	390	97.5	108.3
48	64-QAM	QPSK	QPSK	¾	10	52	4	520	390	97.5	108.3
49	64-QAM	16-QAM	QPSK	¾	12	52	4	624	468	117	130.0
50	64-QAM	16-QAM	16-QAM	¾	14	52	4	728	546	136.5	151.7
51	64-QAM	64-QAM	QPSK	¾	14	52	4	728	546	136.5	151.7
52	64-QAM	64-QAM	16-QAM	¾	16	52	4	832	624	156	173.3

Copyright © 2006 IEEE. All rights reserved.
This is an unapproved IEEE Standards Draft, subject to change.

Table n99—Rate-dependent parameters for optional 20 MHz, N_{SS} = 4 modes. N_{ES} = 1

MCS Index	Modulation				R	N_{TBPS}	N_{SD}	N_{SP}	N_{CBPS}	N_{DBPS}	Data rate (Mbps)	
	Stream 1	Stream 2	Stream 3	Stream 4							800 ns GI	400ns GI
53	16-QAM	QPSK	QPSK	QPSK	½	10	52	4	520	260	65	72.2
54	16-QAM	16-QAM	QPSK	QPSK	½	12	52	4	624	312	78	86.7
55	16-QAM	16-QAM	16-QAM	QPSK	½	14	52	4	728	364	91	101.1
56	64-QAM	QPSK	QPSK	QPSK	½	12	52	4	624	312	78	86.7
57	64-QAM	16-QAM	QPSK	QPSK	½	14	52	4	728	364	91	101.1
58	64-QAM	16-QAM	16-QAM	QPSK	½	16	52	4	832	416	104	115.6
59	64-QAM	16-QAM	16-QAM	16-QAM	½	18	52	4	936	468	117	130.0
60	64-QAM	64-QAM	QPSK	QPSK	½	16	52	4	832	416	104	115.6
61	64-QAM	64-QAM	16-QAM	QPSK	½	18	52	4	936	468	117	130.0
62	64-QAM	64-QAM	16-QAM	16-QAM	½	20	52	4	1040	520	130	144.4
63	64-QAM	64-QAM	64-QAM	QPSK	½	20	52	4	1040	520	130	144.4
64	64-QAM	64-QAM	64-QAM	16-QAM	½	22	52	4	1144	572	143	158.9
65	16-QAM	QPSK	QPSK	QPSK	¾	10	52	4	520	390	97.5	108.3
66	16-QAM	16-QAM	QPSK	QPSK	¾	12	52	4	624	468	117	130.0
67	16-QAM	16-QAM	16-QAM	QPSK	¾	14	52	4	728	546	136.5	151.7
68	64-QAM	QPSK	QPSK	QPSK	¾	12	52	4	624	468	117	130.0

Copyright © 2006 IEEE. All rights reserved.
This is an unapproved IEEE Standards Draft, subject to change.

MCS Index	Modulation				R	N_{TBPS}	N_{SD}	N_{SP}	N_{CBPS}	N_{DBPS}	Data rate (Mbps)	
	Stream 1	Stream 2	Stream 3	Stream 4							800 ns GI	400ns GI
69	64-QAM	16-QAM	QPSK	QPSK	¾	14	52	4	728	546	136.5	151.7
70	64-QAM	16-QAM	16-QAM	QPSK	¾	16	52	4	832	624	156	173.3
71	64-QAM	16-QAM	16-QAM	16-QAM	¾	18	52	4	936	702	175.5	195.0
72	64-QAM	64-QAM	QPSK	QPSK	¾	16	52	4	832	624	156	173.3
73	64-QAM	64-QAM	16-QAM	QPSK	¾	18	52	4	936	702	175.5	195.0
74	64-QAM	64-QAM	16-QAM	16-QAM	¾	20	52	4	1040	780	195	216.7
75	64-QAM	64-QAM	64-QAM	QPSK	¾	20	52	4	1040	780	195	216.7
76	64-QAM	64-QAM	64-QAM	16-QAM	¾	22	52	4	1144	858	214.5	238.3

Table n100—Rate-dependent parameters for optional 40 MHz, N_{SS} = 2 modes. N_{ES} = 1

MCS Index	Modulation		R	N_{TBPS}	N_{SD}	N_{SP}	N_{CBPS}	N_{DBPS}	Data rate (Mbps)	
	Stream 1	Stream 2							800 ns GI	400ns GI
33	16-QAM	QPSK	½	6	108	6	648	324	81	90
34	64-QAM	QPSK	½	8	108	6	864	432	108	120
35	64-QAM	16-QAM	½	10	108	6	1080	540	135	150
36	16-QAM	QPSK	3/4	6	108	6	648	486	121.5	135
37	64-QAM	QPSK	¾	8	108	6	864	648	162	180
38	64-QAM	16-QAM	3/4	10	108	6	1080	810	202.5	225

Copyright © 2006 IEEE. All rights reserved.
This is an unapproved IEEE Standards Draft, subject to change.

Table n101 - Rate-dependent parameters for optional 40 MHz, N_{SS} = 3 modes

MCS Index	Modulation			R	N_{TBPS}	N_{SD}	N_{SP}	N_{CBPS}	N_{DBPS}	N_{ES}	Data rate (Mbps)	
	Stream 1	Stream 2	Stream 3								800ns GI	400ns GI
39	16-QAM	QPSK	QPSK	½	8	108	6	864	432	1	108	120
40	16-QAM	16-QAM	QPSK	½	10	108	6	1080	540	1	135	150
41	64-QAM	QPSK	QPSK	½	10	108	6	1080	540	1	135	150
42	64-QAM	16-QAM	QPSK	½	12	108	6	1296	648	1	162	180
43	64-QAM	16-QAM	16-QAM	½	14	108	6	1512	756	1	189	210
44	64-QAM	64-QAM	QPSK	½	14	108	6	1512	756	1	189	210
45	64-QAM	64-QAM	16-QAM	½	16	108	6	1728	864	1	216	240
46	16-QAM	QPSK	QPSK	¾	8	108	6	864	648	1	162	180
47	16-QAM	16-QAM	QPSK	¾	10	108	6	1080	810	1	202.5	225
48	64-QAM	QPSK	QPSK	¾	10	108	6	1080	810	1	202.5	225
49	64-QAM	16-QAM	QPSK	¾	12	108	6	1296	972	1	243	270
50	64-QAM	16-QAM	16-QAM	¾	14	108	6	1512	1134	1/2*	283.5	315
51	64-QAM	64-QAM	QPSK	¾	14	108	6	1512	1134	1/2*	283.5	315
52	64-QAM	64-QAM	16-QAM	¾	16	108	6	1728	1296	2	324	360

*These MCSs have one FEC encoder with 800ns GI and two FEC encoders with 400 ns GI

Copyright © 2006 IEEE. All rights reserved.
This is an unapproved IEEE Standards Draft, subject to change.

Table n102—Rate-dependent parameters for optional 40 MHz, N_{SS} = 4 modes

MCS Index	Modulation				R	N_{TBPS}	N_{SD}	N_{SP}	N_{CBPS}	N_{DBPS}	N_{ES}	Data rate (Mbps)	
	Stream 1	Stream 2	Stream 3	Stream 4								800ns GI	400ns GI
53	16-QAM	QPSK	QPSK	QPSK	½	10	108	6	1080	540	1	135	150
54	16-QAM	16-QAM	QPSK	QPSK	½	12	108	6	1296	648	1	162	180
55	16-QAM	16-QAM	16-QAM	QPSK	½	14	108	6	1512	756	1	189	210
56	64-QAM	QPSK	QPSK	QPSK	½	12	108	6	1296	648	1	162	180
57	64-QAM	16-QAM	QPSK	QPSK	½	14	108	6	1512	756	1	189	210
58	64-QAM	16-QAM	16-QAM	QPSK	½	16	108	6	1728	864	1	216	240
59	64-QAM	16-QAM	16-QAM	16-QAM	½	18	108	6	1944	972	1	243	270
60	64-QAM	64-QAM	QPSK	QPSK	½	16	108	6	1728	864	1	216	240
61	64-QAM	64-QAM	16-QAM	QPSK	½	18	108	6	1944	972	1	243	270
62	64-QAM	64-QAM	16-QAM	16-QAM	½	20	108	6	2160	1080	1	270	300
63	64-QAM	64-QAM	64-QAM	QPSK	½	20	108	6	2160	1080	1	270	300
64	64-QAM	64-QAM	64-QAM	16-QAM	½	22	108	6	2376	1188	1/2*	297	330
65	16-QAM	QPSK	QPSK	QPSK	¾	10	108	6	1080	810	1	202.5	225
66	16-QAM	16-QAM	QPSK	QPSK	¾	12	108	6	1296	972	1	243	270
67	16-QAM	16-QAM	16-QAM	QPSK	¾	14	108	6	1512	1134	1/2*	283.5	315
68	64-QAM	QPSK	QPSK	QPSK	¾	12	108	6	1296	972	1	243	270

Copyright © 2006 IEEE. All rights reserved.
This is an unapproved IEEE Standards Draft, subject to change.

MCS Index	Modulation				R	N_{TBPS}	N_{SD}	N_{SP}	N_{CBPS}	N_{DBPS}	N_{ES}	Data rate (Mbps)	
	Stream 1	Stream 2	Stream 3	Stream 4								800ns GI	400ns GI
69	64-QAM	16-QAM	QPSK	QPSK	¾	14	108	6	1512	1134	1/2*	283.5	315
70	64-QAM	16-QAM	16-QAM	QPSK	¾	16	108	6	1728	1296	2	324	360
71	64-QAM	16-QAM	16-QAM	16-QAM	¾	18	108	6	1944	1458	2	364.5	405
72	64-QAM	64-QAM	QPSK	QPSK	¾	16	108	6	1728	1296	2	324	360
73	64-QAM	64-QAM	16-QAM	QPSK	¾	18	108	6	1944	1458	2	364.5	405
74	64-QAM	64-QAM	16-QAM	16-QAM	¾	20	108	6	2160	1620	2	405	450
75	64-QAM	64-QAM	64-QAM	QPSK	¾	20	108	6	2160	1620	2	405	450
76	64-QAM	64-QAM	64-QAM	16-QAM	¾	22	108	6	2376	1782	2	445.5	495

*These MCSs have one FEC encoder with 800ns GI and two FEC encoders with 400 ns GI

Copyright © 2006 IEEE. All rights reserved.
This is an unapproved IEEE Standards Draft, subject to change.

Annex A PICS

A.4 PICS proforma–IEEE Std 802.11, 2006 Edition[9]

A.4.3 IUT configuration

Change PICS items CF10 as follows and insert CF15 at the end of the table:

Item	IUT configuration	References	Status	Support
*CF10	Is spectrum management operation supported?	7.3.1.4, 11.6	(CF6 OR CF15):O	
*CF15	Enhancements for Higher Throughput		O	Yes, No

Insert the following new clause after clause A.4.14:

A.4.15 Enhancements for Higher Throughput

A4.15.1 MAC Enhancements for Higher Throughput

Item	Protocol Capability	References	Status	Support
	Are the following MAC protocol enhancements supported?			
HTM1	HT capabilities signaling			
HTM1.1	HT capabilities element	7.3.2.41.1	CF15:M	Yes, No, N/A
HTM1.2	Signaling of STA capabilities in Probe Request, Association Request and Reassociation Request frames	7.3.2.41, 7.2.3.8, 7.2.3.4, 7.2.3.6, 11.1.3.2.2	(CF15 AND CF2):M	Yes, No, N/A
HTM1.3	Signaling of STA and BSS capabilities in Beacon, Probe Response, Association Response and Reassociation Response frames	7.3.2.41, 7.2.3.1, 7.2.3.9, 7.2.3.5, 7.2.3.7, 11.1.3.2.2	(CF15 AND CF1):M	Yes, No, N/A
HTM2	Signaling of additional HT information	7.3.2.42	(CF15 AND CF1):M	Yes, No, N/A

Copyright © 2006 IEEE. All rights reserved.
This is an unapproved IEEE Standards Draft, subject to change.

Item	Protocol Capability	References	Status	Support
HTM3	MPDU aggregation			
HTM3.1	Reception of A-MPDU	7.3.2.41.3, 8.8, 11.15, A.1.17.2	CF15:M	Yes, No, N/A
HTM3.2	A-MPDU format	7.1.2.2, 7.4A.1	CF15:M	Yes, No, N/A
HTM3.3	A-MPDU contents	7.4A.2	CF15:M	Yes, No, N/A
HTM3.4	A-MPDU frame exchange sequences	9.9.1.4, 9.12	CF15:M	Yes, No, N/A
HTM3.5	Transmission of A-MPDU	7.3.2.41.3, 8.8, 9.10.7.7, 11.15	CF15:O	Yes, No, N/A
HTM4	MSDU aggregation			
HTM4.1	Reception of A-MSDUs	7.1.2.1, 7.1.3.5, 7.2.2.1, A1.17.2	CF15:M	Yes, No, N/A
HTM4.2	A-MSDU format	7.1.2.1	CF15:M	Yes, No, N/A
HTM4.3	A-MSDU content	7.1.2.1, 7.2.2.1	CF15:M	Yes, No, N/A
HTM4.4	Transmission of A-MSDUs	7.1.2.1, 7.1.3.5, 7.2.2.1	CF15:O	Yes, No, N/A
HTM5	Block Acknowledgement			
HTM5.1	Block-ACK mechanism	7.2.1.7, 7.2.1.8, 7.3.1.14, 7.3.1.15, 7.3.2.29, 7.4.4, 9.10, 11.5	CF15:M	Yes, No, N/A
HTM5.2	Use of Compressed Bitmap between HT STAs	7.3.1.14, 9.10.6	CF15:M	Yes, No, N/A
HTM5.3	N-Immediate Block-ACK extensions	9.10.7	CF15:M	Yes, No, N/A
HTM5.4	N-Delayed Block-ACK extensions	9.10.8	CF15:O	Yes, No, N/A
HTM5.5	Multiple TID Block ACK	7.2.1.7.1, 7.2.1.7.2, 7.2.1.8.2, 9.18.3, 11.5. 2	HTM10:M	Yes, No, N/A

Copyright © 2006 IEEE. All rights reserved.
This is an unapproved IEEE Standards Draft, subject to change.

Item	Protocol Capability	References	Status	Support
HTM6	Protection mechanisms for different HT PHY options			
HTM6.1	Protection of RIFS PPDUs in the presence of non-HT STAs	9.14.1	CF15:M	Yes, No, N/A
HTM6.2	Protection of Green Field PPDUs in the presence of non-HT STAs	9.14.2	HTP1.3:M	Yes, No, N/A
*HTM7	L-SIG TXOP protection mechanism	9.15	CF15:O	Yes, No, N/A
HTM7.1	Update NAV according to L-SIG	9.15.3	HTM7:M	Yes, No, N/A
HTM8	Long NAV protection mechanism	9.16.2	CF15:O	Yes, No, N/A
HTM8.1	Truncation of TXOP	9.16.3	CF15:O	Yes, No, N/A
*HTM9	Reverse direction aggregation exchanges	9.17	CF15:O	Yes, No, N/A
HTM9.1	Constraints regarding responses	9.17.3	HTM9:M	Yes, No. N/A

Copyright © 2006 IEEE. All rights reserved.
This is an unapproved IEEE Standards Draft, subject to change.

Item	Protocol Capability	References	Status	Support
HTM10	Power Save Multi-Poll (PSMP)	7.4.7.10, 9.18.1.1	CF15:O	Yes, No, N/A
*HTM10.1	Scheduled PSMP	9.18.1, 11.4.4A	HTM10:M	Yes, No, N/A
HTM10.1.1	PSMP additions to TSPEC	7.3.2.29, 11.4.4A.2	HTM10.1:M	Yes, No, N/A
HTM10.1.2	AP role in scheduled PSMP sequence	9.18.1.1.1, 9.18.1.1.2	(HTM10.1 AND CF1):M	Yes, No, N/A
HTM10.1.3	STA role in scheduled PSMP sequence	9.18.1.1.1, 9.18.1.1.2, 9.18.1.1.3 9.18.3.1	(HTM10.1 AND CF2):M	Yes, No, N/A
*HTM10.2	Unscheduled PSMP	9.18.4, 11.4.4B	CF15:M	Yes, No, N/A
HTM10.2.1	PSMP additions to TSPEC	7.3.2.29, 11.4.4A.2	HTM10.2:O	Yes, No, N/A
HTM10.3	Creation, scheduling and transmission of PSMP Action frame	7.4.7.10, 9.18.1.1	(HTM10 AND CF1):M	Yes, No, N/A
HTM10.4	Reception and interpretation of PSMP Action frame	7.4.7.10	(HTM10 AND CF2):M	Yes, No, N/A
HTM10.5	Multiple TID Block ACK (MTBA) rules in PSMP sequence	7.2.1.7.2, 7.2.1.8.2, 9.18.3, 11.5.4	HTM10: M	Yes, No. N/A
HTM10.6	Multi-phase PSMP			
HTM10.6.1	AP support for multi-phase PSMP	7.1.3.5.6, 9.18.2	(HTM10 AND CF1):O	Yes, No. N/A
HTM10.6.2	STA support for multi-phase PSMP	7.1.3.5.6, 9.18.2	(HTM10 AND CF2):O	Yes, No. N/A
HTM11	Link Adaptation			
HTM11.1	Use of HT Control field for Link Adaptation in immediate response exchange.	7.1.3.8, 9.19.2, 9.19.3	CF15:O	Yes, No, N/A
HTM11.2	Link adaptation using explicit feedback mechanism	7.2.2.2, 9.19.4	CF15:O	Yes, No, N/A

Copyright © 2006 IEEE. All rights reserved.
This is an unapproved IEEE Standards Draft, subject to change.

Item	Protocol Capability	References	Status	Support
HTM12	Transmit Beam forming			
*HTM12.1	Transmission of beam formed PPDUs	9.20	CF15:O	Yes, No, N/A
*HTM12.2	Reception of beam formed PPDUs	9.20	CF15:O	Yes, No, N/A
HTM12.3	Initiate transmit beam forming frame exchange with implicit feedback	9.20.2	HTM12.1:O	Yes, No, N/A
HTM12.3.1	Reception of sounding PPDUs	9.20.2	(HTM12.3 OR HTM13):M	Yes, No, N/A
HTM12.4	Response to transmit beam forming frame exchange with implicit feedback	9.20.2	HTM12.2:O	Yes, No, N/A
HTM12.5	Initiate transmit beam forming frame exchange with explicit feedback	7.4.7.6, 7.4.7.7, 9.20.3	HTM12.1:O	Yes, No, N/A
HTM12.5.1	Transmission of sounding PPDUs	9.20.3	(HTM12.5 OR HTM13):M	Yes, No, N/A
HTM12.6	Respond to transmit beam forming frame exchange with explicit feedback	7.4.7.6, 7.4.7.7, 9.20.3	HTM12.2:O	Yes, No, N/A
HTM12.6.1	Transmission of QoS Null+_HTC frame including management action paylod of type CSI	9.20.3	HTM12.6:O.1	Yes, No, N/A
HTM12.6.2	Transmission of QoS Null+_HTC frame including management action paylod of type “uncompressed steering matrices”	9.20.3	HTM12.6:O.1	Yes, No, N/A
HTM12.6.3	Transmission of QoS Null+_HTC frame including management action paylod of type “compressed steering matrices”	9.20.3	HTM12.6:O.1	Yes, No, N/A
*HTM12.7	Calibration procedure	7.2.2.2, 7.4.7.4, 7.4.7.5, 9.20.2.1	HTM12:O	Yes, No, N/A
HTM13	Antenna Selection	7.1.3.8, 7.3.2.41.7, 7.4.7.9, 9.21	CF15:O	Yes, No, N/A
*HTM14	Zero Length Sounding Frame	9.22	CF15:O	Yes, No, N/A

Copyright © 2006 IEEE. All rights reserved.
This is an unapproved IEEE Standards Draft, subject to change.

Item	Protocol Capability	References	Status	Support
HTM15	Space-Time Block Coding (STBC) support			
HTM15.1	Secondary Beacon transmission	11.1.2.1.1	HTP2.11:O	Yes, No, N/A
HTM15.2	Dual CTS protection	7.3.2.42, 7.2.5.4.1	HTP2.11:O	Yes, No, N/A
HTM16	MIMO power save support			
*HTM16.1	AP Support for dynamic and static MIMO power save mode	11.2.3.1	CF15 AND CF1:M	Yes, No, N/A
HTM16.2	STA Support for dynamic and static MIMO power save mode	11.2.3.1	CF15 AND CF2:O	Yes, No, N/A
HTM16.3	Transmit MIMO Power Save state information using HT capabilities, or MIMO Power Save Action frame	7.4.7.2, 11.2.3.1	(HTM16.1 OR HTM16.2):M	Yes, No, N/A
HTM16.4	Receive MIMO Power Save state information and support frame exchanges with MIMO Power Save STAs	11.2.3.1	CF15:M	Yes, No, N/A
HTM17	Mechanisms for coexistence of 20MHz and 40MHz channels	9.23	CF15:M	Yes, No, N/A
HTM18	Channel selection methods for 20/40MHz operation	11.10.8	(HTP2.3.4 AND CF1):M	Yes, No, N/A
HTM19	40/20MHz Operation	11.15.1	HTP2.3.4:M	Yes, No, N/A
HTM20	Phased Coexistence Operation (PCO)			
*HTM20.1	PCO capability at AP	11.16	(CF15 AND CF1):O	Yes, No, N/A
HTM20.1.1	Rules for operation at a PCO AP	7.4.7.3, 11.16.1	HTM20.1:M	Yes, No, N/A
HTM20.2	STA support for PCO mode	11.16	(CF15 AND CF2):O	Yes, No, N/A
HTM20.2.1	Rules for operation at PCO STA	7.4.7.3, 11.16.2	HTM20.2:M	Yes, No, N/A
HTM21	Management Information Base (MIB)			
HTM21.1	dot11PhyHTComplianceGroup	Annex D	CF15:M	Yes, No, N/A
HTM21.2	dot11PhyMCSGroup	Annex D	CF15:M	Yes, No, N/A

Copyright © 2006 IEEE. All rights reserved.
This is an unapproved IEEE Standards Draft, subject to change.

A4.15.2 PHY Enhancements for Higher Throughput

Item	Protocol Capability	References	Status	Support
	Are the following PHY protocol enhancements supported?			
HTP1	PHY Operating Modes			
HTP1.1	Operation according to Clause 17 and Clause 19	20.1.3	CF15:M	Yes, No, N/A
HTP1.2	Mixed mode	20.1.3	CF15:M	Yes, No, N/A
*HTP1.3	Green Field (GF) mode	20.1.3	CF15:O	Yes, No, N/A
HTP2	PLCP frame format			
HTP2.1	Mixed mode PLCP format	20.3.2	CF15:M	Yes, No, N/A
HTP2.2	Green Field PLCP format	20.3.2	HTP1.3:M	Yes, No, N/A
HTP2.3	Modulation and Coding Schemes (MCS)			
HTP2.3.1	MCS 0 though MCS 7 in 20MHz with 800ns guard interval	20.3.2.3, 20.7	CF15:M	Yes, No, N/A
HTP2.3.2	MCS 8 through MCS 15 in 20MHz with 800ns guard interval	20.3.2.3, 20.7	(CF15 AND CF1):M	Yes, No, N/A
HTP2.3.3	Transmit and receive support for 400ns guard interval	20.3.2.3, 20.7	CF15:O	Yes, No, N/A
*HTP2.3.4	Operation at 40MHz	20.3.2.3, 2.7	CF15:O	Yes, No, N/A
HTP2.3.5	Support for MCS with indices 16 though 76	20.3.2.3, 20.7	CF15:O	Yes, No. N/A
HTP2.4	PHY timing parameters			
HTP2.4.1	Values in legacy 20MHz channel	20.3.2.4	CF15:M	Yes, No. N/A
HTP2.4.2	Values in 20MHz HT channel	20.3.2.4	CF15:M	Yes, No. N/A
HTP2.4.3	Values in 40MHz channel	20.3.2.4	HTP2.3.4:M	Yes, No. N/A
HTP2.5	HT Preamble field definition and coding			
HTP2.5.1	Mixed mode preamble	20.3.3.2	CF15:M	Yes, No, N/A
HTP2.5.2	Green Field preamble	20.3.3.3	HTP1.3:M	Yes, No. N/A
HTP2.6	HT Data field definition and coding	20.3.4	CF15:M	Yes, No, N/A

Copyright © 2006 IEEE. All rights reserved.
This is an unapproved IEEE Standards Draft, subject to change.

Item	Protocol Capability	References	Status	Support
HTP2.6.1	Use of LDPC codes	20.3.4.3.3	CF15:O	Yes, No, N/A
HTP2.7	Beam forming	20.3.5	CF15:O	Yes, No, N/A
HTP2.8	Sounding PPDUs			
HTP2.8.1	HT preamble format for sounding PPDUs	20.3.6	CF15:O	Yes, No, N/A
HTP2.8.2	Sounding with a zero length packet	20.3.6.1	HTM14:M	Yes, No, N/A
HTP2.8.3	Sounding PPDU for calibration	20.3.6.2	HTM12.7:M	Yes, No, N/A
HTP2.9	Channel numbering and channelization			
HTP2.9.1	Channel allocation for 20MHz channels at 5GHz	17.3.8.3	CF15:M	Yes, No, N/A
HTP2.9.2	Channel allocation for 20MHz channels at 2.4GHz	19.4.2	CF15:M	Yes, No, N/A
HTP2.9.3	Channel allocation for 40MHz channels at 5GHz	20.3.8.1	HTP2.3.4:M	Yes, No, N/A
HTP2.9.4	Channel allocation for 40MHz channels at 2.4GHz	20.3.8.2	HTP2.3.4:M	Yes, No, N/A
HTP2.10	PMD transmit specification			
HTP2.10.1	PMD transmit specification for 20MHz channel	20.3.14	CF15:M	Yes, No, N/A
HTP2.10.2	PMD transmit specification for 40MHz channel	20.3.14	HTP2.3.4:M	Yes, No, N/A
HTP2.11	Space-Time Block Coding (STBC)	20.3.4.5.1	CF15:O	Yes, No, N/A

Copyright © 2006 IEEE. All rights reserved.
This is an unapproved IEEE Standards Draft, subject to change.

Copyright © 2006 IEEE. All rights reserved.
This is an unapproved IEEE Standards Draft, subject to change.

Copyright © 2006 IEEE. All rights reserved.
This is an unapproved IEEE Standards Draft, subject to change.

Annex C

(normative)

Formal description of MAC operation

C.3 State machines for MAC stations

Add the following paragraph after the paragraph "This clause does not describe the behavior of a STA with QoS facility.":

This clause does not describe the behavior of an HT STA.

Copyright © 2006 IEEE. All rights reserved.
This is an unapproved IEEE Standards Draft, subject to change.

Annex D

(normative)

ASN.1 encoding of the MAC and PHY MIB

Insert in the list of IMPORTS from SNMPv2-SMI the following:

```
Counter64
```

In the Major Section of Annex D, insert the following comment to the end of SMT attributes behind dot11RegulatoryClassesTable:

```
-- dot11HTStationConfigTable ::= { dot11smt 14 }
```

In the Major Section of Annex D, insert the following comment to the end of dot11phy section behind dot11PhyERPTable:

```
-- dot11PhyHTTable ::= {dot11phy 15 }
-- dot11HTSupportedMCSTxTable ::= { dot11phy 16 }
-- dot11HTSupportedMCSRxTable ::= { dot11phy 17 }
-- dot11TxBFConfigTable ::= { dot11phy 18 }
```

In the dot11StationConfig table of Annex D, change the dot11StationConfigEntry sequence list as follows:

```
Dot11StationConfigEntry ::=
    SEQUENCE {
     dot11StationID MacAddress,
     dot11MediumOccupancyLimit INTEGER,
     dot11CFPollable TruthValue,
     dot11CFPPeriod INTEGER,
     dot11CFPMaxDuration INTEGER,
     dot11AuthenticationResponseTimeOut Unsigned32,
     dot11PrivacyOptionImplemented TruthValue,
     dot11PowerManagementMode INTEGER,
     dot11DesiredSSID OCTET STRING,
     dot11DesiredBSSType INTEGER,
     dot11OperationalRateSet OCTET STRING,
     dot11BeaconPeriod INTEGER,
     dot11DTIMPeriod INTEGER,
     dot11AssociationResponseTimeOut Unsigned32,
     dot11DisassociateReason INTEGER,
     dot11DisassociateStation MacAddress,
     dot11DeauthenticateReason INTEGER,
     dot11DeauthenticateStation MacAddress,
     dot11AuthenticateFailStatus INTEGER,
     dot11AuthenticateFailStation MacAddress,
     dot11SpectrumManagementImplemented TruthValue,
     dot11SpectrumManagementRequired TruthValue,
     dot11MultiDomainCapabilityImplemented TruthValue,
     dot11MultiDomainCapabilityEnabled TruthValue,
     dot11CountryString OCTET STRING,
```


Copyright © 2006 IEEE. All rights reserved.
This is an unapproved IEEE Standards Draft, subject to change.

```
      dot11RSNAOptionImplemented TruthValue,
      dot11RSNAPreauthenticationImplemented TruthValue,
      dot11QosOptionImplemented TruthValue,
      dot11ImmediateBlockAckOptionImplemented TruthValue,
      dot11DelayedBlockAckOptionImplemented TruthValue,
      dot11DirectOptionImplemented TruthValue,
      dot11APSDOptionImplemented TruthValue,
      dot11QAckOptionImplemented TruthValue,
      dot11QBSSLoadOptionImplemented TruthValue,
      dot11QueueRequestOptionImplemented TruthValue,
      dot11TXOPRequestOptionImplemented TruthValue,
      dot11MoreDataAckOptionImplemented TruthValue,
      dot11AssociateinNQBSS TruthValue,
      dot11DLSAllowedInQBSS TruthValue,
      dot11DLSAllowed TruthValue,
      dot11HighThroughputOptionImplemented TruthValue,
      }
```

Change the definition of dot11OperationalRateSet as shown below:

```
dot11OperationalRateSet OBJECT-TYPE
      SYNTAX OCTET STRING (SIZE(1..126))
      MAX-ACCESS read-write
      STATUS current
      DESCRIPTION
              "This attribute shall specify the set of non-HT data rates
              at which the station may transmit data. The attribute that
              specifies the set of HT data rates is
              dot11HTOperationalMCSSet. Each octet contains a value
              representing a rate. Each rate shall be within the range
              from 2 to 127, corresponding to data rates in increments of
              500 kbit/s from 1 Mbit/s to 63.5 Mbit/s, and shall be
              supported (as indicated in the supported rates table) for
              receiving data. This value is reported in transmitted
              Beacon, Probe Request, Probe Response, Association Request,
              Association Response, Reassociation Request, and
              Reassociation Response frames, and is used to determine
              whether a BSS with which the station desires to synchronize
              is suitable. It is also used when starting a BSS, as
              specified in 10.3."
      ::= { dot11StationConfigEntry 11 }
```

Insert the following elements to the end of dot11StationConfigTable element definitions after dot11DLSAllowed:

```
dot11HighThroughputOptionImplemented OBJECT-TYPE
      SYNTAX TruthValue
      MAX-ACCESS read-only
      STATUS current
      DESCRIPTION
         "This attribute indicates whether the entity is HT Capable."
      ::= { dot11StationConfigEntry 43 }
```

Insert the following table behind dot11RegulatoryClasses Table:

Copyright © 2006 IEEE. All rights reserved.
This is an unapproved IEEE Standards Draft, subject to change.

```
--
*********************************************************************
-- * dot11HTStationConfig TABLE
--
*********************************************************************
dot11HTStationConfigTable OBJECT-TYPE
        SYNTAX SEQUENCE OF Dot11StationConfigEntry
        MAX-ACCESS not-accessible
        STATUS current
        DESCRIPTION
             "Station  Configuration  attributes.  In  tablular  form  to
             allow for multiple instances on an agent."
        ::= { dot11smt 14 }

dot11HTStationConfigEntry OBJECT-TYPE
        SYNTAX Dot11HTStationConfigEntry
        MAX-ACCESS not-accessible
        STATUS current
        DESCRIPTION
             "An  entry  (conceptual  row)  in  the  dot11HTStationConfig
             Table.

             ifIndex - Each IEEE 802.11 interface is represented by an
             ifEntry. Interface tables in this MIB module are indexed by
             ifIndex."
        INDEX { ifIndex }
        ::= { dot11HTStationConfigTable 1 }

Dot11HTStationConfigEntry ::=
        SEQUENCE {
                dot11HTOperationalMCSSet OCTET STRING,
                dot11MIMOPowerSave INTEGER,
                dot11NDelayedBlockAckOptionImplemented TruthValue,
                dot11MaxAMSDULength INTEGER,
                dot11PSMPOPtionImplemented TruthValue,
                dot11STBCControlFrameOptionImplemented TruthValue,
                dot11LsigTxopProtectionOptionImplemented TruthValue,
                dot11MaxRxAMPDUFactor INTEGER,
                dot11MPDUDensity INTEGER,
                dot11PCOOptionImplemented TruthValue,
                dot11TransitionTime INTEGER,
                dot11MCSFeedbackOptionImplemented INTEGER
        }

dot11HTOperationalMCSSet OBJECT-TYPE
      SYNTAX OCTET STRING (SIZE(1..127))
      MAX-ACCESS read-write
      STATUS current
      DESCRIPTION
             "This attribute shall specify the set of MCS at which the
             station may transmit data. Each octet contains a value
             representing a rate. Each MCS shall be within the range
             from 1 to 127, and shall be supported for receiving data.
             This  value  is  reported  in  transmitted  Beacon,  Probe
             Request, Probe Response, Association Request, Association
             Response, Reassociation Request, and Reassociation Response
```


Copyright © 2006 IEEE. All rights reserved.
This is an unapproved IEEE Standards Draft, subject to change.

```
                frames, and is used to determine whether a BSS with which
                the station desires to synchronize is suitable. It is also
                used when starting a BSS, as specified in 10.3."
        ::= { dot11HTStationConfigEntry 1 }

dot11MIMOPowerSave OBJECT-TYPE
        SYNTAX INTEGER { static(1), dynamic(2), mimo(3) }
        MAX-ACCESS read-only
        STATUS current
        DESCRIPTION
                "This is an 8-bit integer value that identifies the
                configured power save state of MIMO."
::= { dot11HTStationConfigEntry 2 }

dot11NDelayedBlockAckOptionImplemented OBJECT-TYPE
        SYNTAX TruthValue
        MAX-ACCESS read-only
        STATUS current
        DESCRIPTION
                "This attribute, when TRUE, shall indicate that the station
                implementation is capable of supporting the No-Ack option
                of the Delayed Block Ack. The default value of this
                attribute is FALSE."
::= { dot11HTStationConfigEntry 3 }

dot11MaxAMSDULength OBJECT-TYPE
        SYNTAX INTEGER { 3839, 7935 }
        MAX-ACCESS read-only
        STATUS current
        DESCRIPTION
                "This attribute shall indicate the supported maximum size
                of A-MSDU. The default value of this attribute is 3839."
::= { dot11HTStationConfigEntry 4 }

dot11PSMPOptionImplemented OBJECT-TYPE
        SYNTAX TruthValue
        MAX-ACCESS read-only
        STATUS current
        DESCRIPTION
                "This attribute, when TRUE, shall indicate that the station
                implementation is capable of supporting PSMP. The default
                value of this attribute is FALSE."
::= { dot11HTStationConfigEntry 5 }

dot11STBCControlFrameOptionImplemented OBJECT-TYPE
        SYNTAX TruthValue
        MAX-ACCESS read-only
        STATUS current
        DESCRIPTION
                "This attribute, when TRUE, shall indicate that the station
                implementation is capable of processing the received STBC
                control frames. The default value of this attribute is
                FALSE."
::= { dot11HTStationConfigEntry 6 }

dot11LsigTxopProtectionIOptionImplemented OBJECT-TYPE
```


Copyright © 2006 IEEE. All rights reserved.
This is an unapproved IEEE Standards Draft, subject to change.

```
        SYNTAX TruthValue
        MAX-ACCESS read-only
        STATUS current
        DESCRIPTION
              "This attribute, when TRUE, shall indicate that the station
              implementation is capable of supporting L-SIG TXOP
              Protection option. The default value of this attribute is
              FALSE."
::= { dot11HTStationConfigEntry 7 }

dot11MaxRxAMPDUFactor OBJECT-TYPE
        SYNTAX INTEGER (0..3)
        MAX-ACCESS read-only
        STATUS current
        DESCRIPTIOM
              "This attribute shall indicate the maximum length of A-MPDU
              that the STA can receive. The Maximum Rx A-MPDU defined by
              this field is equal to 2^(13+dot11MaxRxAMPDUFactor) -1 bytes. The
              default value of this attribute is 0."
::= { dot11HTStationConfigEntry 8 }

dot11MPDUDensity OBJECT-TYPE
        SYNTAX INTEGER (0..7)
        MAX-ACCESS read-only
        STATUS current
        DESCRIPTIOM
              "This attribute shall indicate the minimum time between the
              start of adjacent MPDUs within an A-MPDU. This time is
              measured at the PHY_SAP; the number of bytes between the
              start of two consecutive MPDUs in A-MPDU shall be equal or
              greater than (MPDU-density*PHY-bit-rate)/8. The encoding of
              the minimum time to this attribute is:
              0   no restriction
              1   1/8 µsec
              2   1/4 µsec
              3   1/2 µsec
              4   1 µsec
              5   2 µsec
              6   4 µsec
              7   8 µsec
              The default value of this attribute is 0."

::= { dot11HTStationConfigEntry 9 }

dot11PCOOptionImplemented OBJECT-TYPE
        SYNTAX TruthValue
        MAX-ACCESS read-only
        STATUS current
        DESCRIPTION
              "This attribute, when TRUE, shall indicate that the station
              implementation is capable of supporting Phased Coexistence
              Operation. The default value of this attribute is FALSE. "
::= { dot11HTStationConfigEntry 10 }

dot11TransitionTime OBJECT-TYPE
        SYNTAX INTEGER (1..3)
```


Copyright © 2006 IEEE. All rights reserved.
This is an unapproved IEEE Standards Draft, subject to change.

```
        MAX-ACCESS read-only
        STATUS current
        DESCRIPTION
              "This attribute indicates that the minimum transition time
              within which the STA can switch between 20 MHz channel
              width and 40 MHz channel width with a high probability. The
              encoding of the transition time to this attribute is:
              1   400 µsec
              2   1500 µsec
              3   5000 µsec
              The default value of this attribute is 3. "
::= { dot11HTStationConfigEntry 11 }

dot11MCSFeedbackOptionImplemented OBJECT-TYPE
        SYNTAX INTEGER { none(0), unsolicited (2), both (3) }
        MAX-ACCESS read-only
        STATUS current
        DESCRIPTION
              "This attribute shall indicate the MCS feed back capability
              supported by the station implementation. The default value
              of this attribute is 0. "
::= { dot11HTStationConfigEntry 12 }
```

In dot11OperationTable change Dot11OperationEntry as follows:

```
     Dot11OperationEntry ::=
        SEQUENCE {
                dot11MACAddress MacAddress,
                dot11RTSThreshold INTEGER,
                dot11ShortRetryLimit INTEGER,
                dot11LongRetryLimit INTEGER,
                dot11FragmentationThreshold INTEGER,
                dot11MaxTransmitMSDULifetime Unsigned32,
                dot11MaxReceiveLifetime Unsigned32,
                dot11ManufacturerID DisplayString,
                dot11ProductID DisplayString,
                dot11CAPLimit INTEGER,
                dot11HCCWmin INTEGER,
                dot11HCCWmax INTEGER,
                dot11HCCAIFSN INTEGER,
                dot11ADDBAResponseTimeout INTEGER,
                dot11ADDTSResponseTimeout INTEGER,
                dot11ChannelUtilizationBeaconInterval INTEGER,
                dot11ScheduleTimeout INTEGER,
                dot11DLSResponseTimeout INTEGER,
                dot11QAPMissingAckRetryLimit INTEGER,
                dot11EDCAAveragingPeriod INTEGER,
                dot11HTOperatingMode INTEGER,
                dot11RIFSMode TruthValue,
                dot11PSMPControlledAccess TruthValue,
                dot11ServiceIntervalGranularity INTEGER,
                dot11DualCTSProtection TruthValue,
                dot11LSIGTXOPFullProtectionEnabled TruthValue,
                dot11NonGFEntitiesPresent TruthValue,
```


Copyright © 2006 IEEE. All rights reserved.
This is an unapproved IEEE Standards Draft, subject to change.

```
            dot11PCOActivated TruthValue,
            dot11PCO40MaxDuration INTEGER,
            dot11PCO20MaxDuration INTEGER,
            dot11PCO40MinDuration INTEGER,
            dot11PCO20MinDuration INTEGER
             }
```

Insert the following definitions behind the definition of dot11EDCAAveragingPeriod:

```
dot11HTOperatingMode OBJECT-TYPE
       SYNTAX INTEGER { pureHt (0), optionalProtection (1),
             mandatoryFortyProtection (2), mandatoryAllProtection (3) }
       MAX-ACCESS read-write
       STATUS current
       DESCRIPTION
             "This attribute shall indicate the level of protection that
             needs to be provided to the transmissions in an IEEE 802.11
             network with HT devices. The default value of this
             attribute is 0."
    ::= { dot11OperationEntry 21 }

dot11RIFSMode OBJECT-TYPE
       SYNTAX TruthValue
       MAX-ACCESS read-write
       STATUS current
       DESCRIPTION
             "This attribute, when TRUE, shall indicate that RIFS mode
             is allowed in the BSS. The default value of this attribute
             is FALSE."
    ::= { dot11OperationEntry 22 }

dot11PSMPControlledAccess OBJECT-TYPE
       SYNTAX TruthValue
       MAX-ACCESS read-write
       STATUS current
       DESCRIPTION
             "This attribute, when TRUE, shall indicate that the AP
             accepts associations only from stations for which
             dot11PSMPOptionImplemented is TRUE. The default value of
             this attribute is FALSE."
    ::= { dot11OperationEntry 23 }

dot11ServiceIntervalGranularity OBJECT-TYPE
       SYNTAX INTEGER (0..7)
       MAX-ACCESS read-write
       STATUS current
       DESCRIPTION
             "This attribute shall indicates the Service Interval
             Granularity to be used for scheduled PSMP. The value of the
             granularity is given by
             (dot11ServiceIntervalGranularity+1)*5 milliseconds. The
             default value of this attribute is 0."
    ::= { dot11OperationEntry 24 }

dot11DualCTSProtection OBJECT-TYPE
       SYNTAX TruthValue
```


Copyright © 2006 IEEE. All rights reserved.
This is an unapproved IEEE Standards Draft, subject to change.

```
        MAX-ACCESS read-write
        STATUS current
        DESCRIPTION
              "This attribute, when TRUE, shall indicate that the AP uses
              dual CTS protection to protect the regular and the STBC
              transmissions. The default value of this attribute is
              FALSE."
    ::= { dot11OperationEntry 25 }

dot11LSigTxopFullProtectionEnabled OBJECT-TYPE
        SYNTAX TruthValue
        MAX-ACCESS read-write
        STATUS current
        DESCRIPTION
              "This attribute, when TRUE, shall indicate that the LSIG
              TXOP Protection may be used by stations that have the
              attribute dot11LSigTxopProtectionOptionImplemented set to
              TRUE. The default value of this attribute is FALSE."
    ::= { dot11OperationEntry 26 }

dot11NonGFEntitiesPresent OBJECT-TYPE
        SYNTAX TruthValue
        MAX-ACCESS read-write
        STATUS current
        DESCRIPTION
              "This attribute, when TRUE, shall indicate that Non
              GreenField entities are present in the BSS. The default
              value of this attribute is FALSE."
    ::= { dot11OperationEntry 27 }

dot11PCOActivated OBJECT-TYPE
        SYNTAX TruthValue
        MAX-ACCESS read-write
        STATUS current
        DESCRIPTION
              "This attribute, when TRUE, shall indicate that the PCO is
              activated. The default value of this attribute is FALSE."
    ::= { dot11OperationEntry 28 }

dot11PCO40MaxDuration OBJECT-TYPE
    SYNTAX INTEGER (1..65535)
    MAX-ACCESS read-write
    STATUS current
    DESCRIPTION
"The attribute shall describe the maximum duration of 40 MHz phase in TU
under PCO operation. The default value of this attribute shall be 60.
The value of this attribute shall be equal to or larger than
dot11PCO40MinDuration."
    ::= { dot11OperationEntry 29 }

dot11PCO20MaxDuration OBJECT-TYPE
    SYNTAX INTEGER (1..65535)
    MAX-ACCESS read-write
    STATUS current
    DESCRIPTION
```


Copyright © 2006 IEEE. All rights reserved.
This is an unapproved IEEE Standards Draft, subject to change.

```
"The attribute shall describe the maximum duration of 20 MHz phase in TU
under PCO operation. The default value of this attribute shall be 60.
The value of this attribute shall be equal to or larger than
dot11PCO20MinDuration."
    ::= { dot11OperationEntry 30 }

dot11PCO40MinDuration OBJECT-TYPE
    SYNTAX INTEGER (1..65535)
    MAX-ACCESS read-write
    STATUS current
    DESCRIPTION
"The attribute shall describe the maximum duration of 40 MHz phase in TU
under PCO operation. The default value of this attribute shall be 40."
    ::= { dot11OperationEntry 31 }

dot11PCO20MinDuration OBJECT-TYPE
    SYNTAX INTEGER (1..65535)
    MAX-ACCESS read-write
    STATUS current
    DESCRIPTION
"The attribute shall describe the maximum duration of 20 MHz phase in TU
under PCO operation. The default value of this attribute shall be 40."
    ::= { dot11OperationEntry 32 }
```

In dot11CountersTable change Dot11CountersEntry as follows:

```
Dot11CountersEntry ::=
       SEQUENCE {

                dot11TransmittedFragmentCount         Counter32,
                dot11MulticastTransmittedFrameCount   Counter32,
                dot11FailedCount                      Counter32,
                dot11RetryCount                       Counter32,
                dot11MultipleRetryCount               Counter32,
                dot11FrameDuplicateCount              Counter32,
                dot11RTSSuccessCount                  Counter32,
                dot11RTSFailureCount                  Counter32,
                dot11ACKFailureCount                  Counter32,
                dot11ReceivedFragmentCount            Counter32,
                dot11MulticastReceivedFrameCount      Counter32,
                dot11FCSErrorCount                    Counter32,
                dot11TransmittedFrameCount            Counter32,
                dot11WEPUndecryptableCount            Counter32,
                dot11QoSDiscardedFragmentCount        Counter32,
                dot11AssociatedStationCount           Counter32,
                dot11QoSCFPollsReceivedCount          Counter32,
                dot11QoSCFPollsUnusedCount            Counter32,
                dot11QoSCFPollsUnusableCount          Counter32,
                dot11QoSCFPollsLostCount              Counter32,
                dot11TransmittedAMSDUCount            Counter32,
                dot11FailedAMSDUCount                 Counter32,
                dot11RetryAMSDUCount                  Counter32,
                dot11MultipleRetryAMSDUCount          Counter32,
                dot1TransmittedOctetsInAMSDUCount     Counter64,
                dot11AMSDUAckFailureCount             Counter32,
```


Copyright © 2006 IEEE. All rights reserved.
This is an unapproved IEEE Standards Draft, subject to change.

```
                dot11ReceivedAMSDUCount                Counter32,
                dot1ReceivedOctetsInAMSDUCount         Counter64,
                dot11TransmittedAMPDUCount             Counter32,
                dot11TransmittedMPDUsInAMPDUCount      Counter32,
                dot11TransmittedOctetsInAMPDUCount     Counter64,
                dot11AMPDUReceivedCount                Counter32,
                dot11MPDUInReceivedAMPDUCount          Counter32,
                dot11ReceivedOctetsInAMPDUCount        Counter64,
                dot11AMPDUDelimiterCRCErrorCount       Counter32,
                dot11ImplicitBARFailureCount           Counter32,
                dot11ExplicitBARFailureCount           Counter32,
                dot11ChannelWidthSwitchCount           Counter32,
                dot11TwentyMHzFrameTransmittedCount    Counter32,
                dot11FortyMHzFrameTransmittedCount     Counter32,
                dot11TwentyMHzFrameReceivedCount       Counter32,
                dot11FortyMHzFrameReceivedCount        Counter32,
                dot11PSMPSuccessCount                  Counter32,
                dot11PSMPFailureCount                  Counter32,
                dot11GrantedRDGUsedCount               Counter32,
                dot11GrantedRDGUnusedCount             Counter32,
                dot11TransmittedFramesInGrantedRDGCount     Counter32,
                dot11TransmittedOctetsInGrantedRDGCount     Counter64,
                dot11BeamformingFrameCount             Counter32,
                dot11DualCTSSuccessCount               Counter32,
                dot11DualCTSFailureCount               Counter32,
                dot11STBCCTSSuccessCount               Counter32,
                dot11STBCCTSFailureCount               Counter32,
                dot11nonSTBCCTSSuccessCount            Counter32,
                dot11nonSTBCCTSFailureCount            Counter32,
                dot11RTSEPPSuccessCount                Counter32,
                dot11RTSEPPFailureCount                Counter32}
```

Insert the following definitions behind the definition of dot1QoSCFPollsLostCount:

```
dot11TransmittedAMSDUCount OBJECT-TYPE
       SYNTAX Counter32
       MAX-ACCESS read-only
       STATUS current
       DESCRIPTION
             "This counter shall be incremented for an acknowledged A-
             MSDU frame with an individual address in the address 1
             field or an AMSDU frame with a multicast address in the
             address 1 field."
       ::= { dot11CountersEntry 20 }

dot11FailedAMSDUCount OBJECT-TYPE
       SYNTAX Counter32
       MAX-ACCESS read-only
       STATUS current
       DESCRIPTION
             "This counter shall be incremented when an A-MSDU is not
             transmitted successfully due to the number of transmit
             attempts exceeding either the dot11ShortRetryLimit or
             dot11LongRetryLimit."
       ::= { dot11CountersEntry 21 }
```


Copyright © 2006 IEEE. All rights reserved.
This is an unapproved IEEE Standards Draft, subject to change.

```
dot11RetryAMSDUCount OBJECT-TYPE
        SYNTAX Counter32
        MAX-ACCESS read-only
        STATUS current
        DESCRIPTION
              "This counter shall be incremented when an A-MSDU is
              successfully transmitted after one or more
              retransmissions."
        ::= { dot11CountersEntry 22 }

dot11MultipleRetryAMSDUCount OBJECT-TYPE
        SYNTAX Counter32
        MAX-ACCESS read-only
        STATUS current
        DESCRIPTION
              "This counter shall be incremented when an A-MSDU is
              successfully transmitted after more than one
              retransmission."
        ::= { dot11CountersEntry 23 }

dot1TransmittedOctetsInAMSDU OBJECT-TYPE
        SYNTAX Counter64
        MAX-ACCESS read-only
        STATUS current
        DESCRIPTION
              "This counter shall be incremented by the number of octets
              in the framebody of an A-MSDU frame when an A-MSDU frame is
              successfully transmitted."
        ::= { dot11CountersEntry 24 }

dot11AMSDUAckFailureCount OBJECT-TYPE
        SYNTAX Counter32
        MAX-ACCESS read-only
        STATUS current
        DESCRIPTION
              "This counter shall be incremented when an acknowledgement
              to an AMSDU is not received when expected. This
              acknowledgement can be in an ACK or the BA frame."
        ::= { dot11CountersEntry 25 }

dot11ReceivedAMSDUCount OBJECT-TYPE
        SYNTAX Counter32
        MAX-ACCESS read-only
        STATUS current
        DESCRIPTION
              "This counter shall be incremented for a received A-MSDU
              frame with the station’s MAC address in the address 1 field
              or an AMSDU frame with a multicast address in the address 1
              field."
        ::= { dot11CountersEntry 26 }

dot1ReceivedOctesInAMSDUCount OBJECT-TYPE
        SYNTAX Counter64
        MAX-ACCESS read-only
        STATUS current
```


Copyright © 2006 IEEE. All rights reserved.
This is an unapproved IEEE Standards Draft, subject to change.

```
        DESCRIPTION
              "This counter shall be incremented by the number of octets
              in the framebody of an A-MSDU frame when an A-MSDU frame is
              received."
        ::= { dot11CountersEntry 27 }

dot11TransmittedAMPDUCount OBJECT-TYPE
        SYNTAX Counter32
        MAX-ACCESS read-only
        STATUS current
        DESCRIPTION
              "This counter shall be incremented when an A-MPDU is
              transmitted."
        ::= { dot11CountersEntry 28 }

dot11TransmittedMPDUsInAMPDUCount OBJECT-TYPE
        SYNTAX Counter32
        MAX-ACCESS read-only
        STATUS current
        DESCRIPTION
              "This counter shall increment by the number of MPDUs in the
              A-MPDU when an A-MPDU is transmitted."
        ::= { dot11CountersEntry 26 }

dot11TransmittedOctetsInAMPDUCount OBJECT-TYPE
        SYNTAX Counter64
        MAX-ACCESS read-only
        STATUS current
        DESCRIPTION
              "This counter shall be incremented by the number of octets
              in the A-MPDU frame when an A-MPDU frame is transmitted."
        ::= { dot11CountersEntry 27 }

dot11AMPDUReceivedCount OBJECT-TYPE
    SYNTAX Counter32
    MAX-ACCESS read-only
    STATUS current
    DESCRIPTION
              "This counter shall be incremented when the MAC receives an
              A-MPDU from the PHY."
        ::= { dot11CountersEntry 28 }

dot11MPDUInReceivedAMPDUCount OBJECT-TYPE
        SYNTAX Counter32
        MAX-ACCESS read-only
        STATUS current
        DESCRIPTION
              "This counter shall be incremented by the number of MPDUs
              received in the A-MPDU when an A-MPDU is received."
        ::= { dot11CountersEntry 29 }

dot11ReceivedOctetsInAMPDUCount OBJECT-TYPE
        SYNTAX Counter64
        MAX-ACCESS read-only
        STATUS current
        DESCRIPTION
```


Copyright © 2006 IEEE. All rights reserved.
This is an unapproved IEEE Standards Draft, subject to change.

```
                "This counter shall be incremented by the number of octets
                in the A-MSDU frame when an A-MPDU frame is received."
        ::= { dot11CountersEntry 30 }

dot11AMPDUDelimiterCRCErrorCount OBJECT-TYPE
        SYNTAX Counter32
        MAX-ACCESS read-only
        STATUS current
        DESCRIPTION
                "This counter shall be incremented when an A-MPDU delimiter
                has CRC error when this is the first CRC error in the
                received A-MPDU or when the previous delimiter has been
                decoded correctly."
        ::= { dot11CountersEntry 31 }

dot11ImplicitBARFailureCount OBJECT-TYPE
        SYNTAX Counter32
        MAX-ACCESS read-only
        STATUS current
        DESCRIPTION
                "This counter shall be incremented when the expected BA is
                not received in response to an Implicit BAR frame."
        ::= { dot11CountersEntry 32 }

dot11ExplicitBARFailureCount OBJECT-TYPE
        SYNTAX Counter32
        MAX-ACCESS read-only
        STATUS current
        DESCRIPTION
                "This counter shall be incremented when the expected BA is
                not received in response to an Explicit BAR."
        ::= { dot11CountersEntry 32 }

dot11ChannelWidthSwitchCount OBJECT-TYPE
        SYNTAX Counter32
        MAX-ACCESS read-only
        STATUS current
        DESCRIPTION
                "This counter shall be increment when the bandwidth used is
                switched from 20 to 40 or vice-versa."
        ::= { dot11CountersEntry 33 }

dot11TwentyMHzTransmittedFrameCount OBJECT-TYPE
        SYNTAX Counter32
        MAX-ACCESS read-only
        STATUS current
        DESCRIPTION
                "This counter shall be incremented when a Frame is
                transmitted only on the control channel."
        ::= { dot11CountersEntry 34 }

dot11FortyTransmittedMHzFrameCount OBJECT-TYPE
        SYNTAX Counter32
        MAX-ACCESS read-only
        STATUS current
        DESCRIPTION
```


Copyright © 2006 IEEE. All rights reserved.
This is an unapproved IEEE Standards Draft, subject to change.

```
                "This counter shall be incremented when a Frame is
                transmitted on both control and extension channels."
        ::= { dot11CountersEntry 35 }

dot11TwentyMHzReceivedFrameCount OBJECT-TYPE
        SYNTAX Counter32
        MAX-ACCESS read-only
        STATUS current
        DESCRIPTION
                "This counter shall be incremented when a Frame is received
                only on the control channel."
        ::= { dot11CountersEntry 36 }

dot11FortyMHzReceivedFrameCount OBJECT-TYPE
        SYNTAX Counter32
        MAX-ACCESS read-only
        STATUS current
        DESCRIPTION
                "This counter shall be incremented when a Frame is received
                on both the control and extension channels."
        ::= { dot11CountersEntry 37 }

dot11PSMPSuccessCount OBJECT-TYPE
        SYNTAX Counter32
        MAX-ACCESS read-only
        STATUS current
        DESCRIPTION
                "This counter shall be incremented when an allocated ULT is
                used."
        ::= { dot11CountersEntry 38 }

dot11PSMPFailureCount OBJECT-TYPE
        SYNTAX Counter32
        MAX-ACCESS read-only
        STATUS current
        DESCRIPTION
                "This counter shall be incremented when an allocated ULT is
                not used."
        ::= { dot11CountersEntry 39 }


dot11GrantedRDGUsedCount OBJECT-TYPE
        SYNTAX Counter32
        MAX-ACCESS read-only
        STATUS current
        DESCRIPTION
                "This counter at the initiatior shall be incremented when
                an allocated RDG is used by the station, apart from
                transmitting a response frame such as ACK or Block Ack
                frames."
        ::= { dot11CountersEntry 40 }

dot11GrantedRDGUnusedCount OBJECT-TYPE
        SYNTAX Counter32
        MAX-ACCESS read-only
        STATUS current
```


Copyright © 2006 IEEE. All rights reserved.
This is an unapproved IEEE Standards Draft, subject to change.

```
        DESCRIPTION
              "This counter at the initiatior shall be incremented when
              an allocated RDG is not used by the station, apart from
              transmitting a response frame such as ACK or Block Ack
              frames."
        ::= { dot11CountersEntry 41 }

dot11TransmittedFramesInGrantedRDGCount OBJECT-TYPE
        SYNTAX Counter32
        MAX-ACCESS read-only
        STATUS current
        DESCRIPTION
              "This counter at the initiatior shall be incremented for
              every frame, other than response frames such as ACK or
              Block Ack frames, transmitted by the station during a
              granted RDG."
        ::= { dot11CountersEntry 42 }

dot11TransmittedOctetsInGrantedRDG OBJECT-TYPE
        SYNTAX Counter64
        MAX-ACCESS read-only
        STATUS current
        DESCRIPTION
              "This counter at the initiatior shall be incremented by the
              number of octets in the framebody of a frame, other than
              response frames such as ACK or Block Ack frames,
              transmitted by the station during a granted RDG."
        ::= { dot11CountersEntry 43 }

dot11BeamformingFrameCount OBJECT-TYPE
        SYNTAX Counter32
        MAX-ACCESS read-only
        STATUS current
        DESCRIPTION
              "This counter shall be incremented when th transmitter
              sends a frame with new/updated beam forming parameters."
        ::= { dot11CountersEntry 44 }

dot11DualCTSSuccessCount OBJECT-TYPE
        SYNTAX Counter32
        MAX-ACCESS read-only
        STATUS current
        DESCRIPTION
              "This counter shall be incremented when AP sends a dual CTS
              in response to an STA initiating TXOP in extended range."
        ::= { dot11CountersEntry 45 }


dot11DualCTSFailureCount OBJECT-TYPE
        SYNTAX Counter32
        MAX-ACCESS read-only
        STATUS current
        DESCRIPTION
              "This counter shall be incremented when AP fails to send a
              dual CTS in response to an STA initiating TXOP in extended
              range."
```


Copyright © 2006 IEEE. All rights reserved.
This is an unapproved IEEE Standards Draft, subject to change.

```
        ::= { dot11CountersEntry 46 }

dot11STBCCTSSuccessCount OBJECT-TYPE
        SYNTAX Counter32
        MAX-ACCESS read-only
        STATUS current
        DESCRIPTION
              "This counter shall be incremented when AP does not detect
              a collision PIFS after sending a STBC CTS to self in
              extended range."
        ::= { dot11CountersEntry 47 }

dot11STBCCTSFailureCount OBJECT-TYPE
        SYNTAX Counter32
        MAX-ACCESS read-only
        STATUS current
        DESCRIPTION
              "This counter shall be incremented when AP detects a
              collision PIFS after sending a STBC CTS to self in extended
              range."
        ::= { dot11CountersEntry 48 }

dot11nonSTBCCTSSuccessCount OBJECT-TYPE
        SYNTAX Counter32
        MAX-ACCESS read-only
        STATUS current
        DESCRIPTION
              "This counter shall be incremented when AP does not detect
              a collision PIFS after sending a non-STBC CTS to self in
              extended range."
        ::= { dot11CountersEntry 49 }

dot11nonSTBCCTSFailureCount OBJECT-TYPE
        SYNTAX Counter32
        MAX-ACCESS read-only
        STATUS current
        DESCRIPTION
              "This counter shall be incremented when AP detects a
              collision PIFS after sending a nonSTBC CTS to self in
              extended range."
        ::= { dot11CountersEntry 50 }

dot11RTSEPPSuccessCount OBJECT-TYPE
        SYNTAX Counter32
        MAX-ACCESS read-only
        STATUS current
        DESCRIPTION
              "This counter shall be incremented when the duration/ID
              field is set according to the rules of EPP in the received
              CTS following a transmission of RTS in EPP mode."
        ::= { dot11CountersEntry 50 }

dot11RTSEPPFailureCount OBJECT-TYPE
        SYNTAX Counter32
        MAX-ACCESS read-only
        STATUS current
```


Copyright © 2006 IEEE. All rights reserved.
This is an unapproved IEEE Standards Draft, subject to change.

```
        DESCRIPTION
              "This counter shall be incremented when the duration/ID
              field is not set according to the rules of EPP in the
              received CTS following a transmission of RTS in EPP mode."
        ::= { dot11CountersEntry 51 }
```

Change dot11PhyType in dot11PhyOperationTable as shown below:

```
dot11PHYType OBJECT-TYPE
        SYNTAX INTEGER { fhss(1), dsss(2), irbaseband(3), ofdm(4),
              hrdsss(5), erp(6), ht (7) }
        MAX-ACCESS read-only
        STATUS current
        DESCRIPTION
              "This is an 8-bit integer value that identifies the PHY
              type supported by the attached PLCP and PMD. Currently
              defined values and their corresponding PHY types are:

              FHSS 2.4 GHz = 01, DSSS 2.4 GHz = 02, IR Baseband = 03,
              OFDM 5GHz = 04, HRDSSS = 05, ERP = 06, HT = 07"
::= { dot11PhyOperationEntry 1 }
```

Insert the following entries to Dot11PhyAntennaEntry as shown:

```
Dot11PhyAntennaEntry ::=
      SEQUENCE { dot11CurrentTxAntenna Integer32,
            dot11DiversitySupport INTEGER,
            dot11CurrentRxAntenna Integer32,
            dot11AntennaSelectionOptionImpemented   TruthValue,
            dot11TransmitExplicitCSIFeedbackASOptionImplemented TruthValue,
            dot11TransmitIndicesFeedbackASOptionImplemented TruthValue,
            dot11ExplicitCSIFeedbackASOptionImplemented TruthValue,
            dot11TransmitIndicesComputationFeedbackASOptionImplemented
      TruthValue,
            dot11ReceiveAntennaSelectionOptionImplemented TruthValue,
            dot11TransmitSoundingPPDUOptionImplemented TruthValue
             }
```

Insert the following at the end of the definition of dot11CurrentRxAntenna:

```
dot11AntennaSelectionOptionImplemented OBJECT-TYPE
        SYNTAX TruthValue
        MAX-ACCESS read-only
        STATUS current
        DESCRIPTION
              “This attribute, when TRUE, shall indicate that antenna
              selection is supported by the station implementation. The
              default value of this attribute is FALSE.”
    ::= { dot11PhyAntennaEntry 4 }

dot11TransmitExplicitCSIFeedbackASOptionImplemented OBJECT-TYPE
        SYNTAX TruthValue
        MAX-ACCESS read-only
        STATUS current
```


Copyright © 2006 IEEE. All rights reserved.
This is an unapproved IEEE Standards Draft, subject to change.

```
        DESCRIPTION
              "This attribute, when TRUE, shall indicate that the
              transmit Antenna Selection based on explicit CSI feedback
              is supported by the station implementation. The default
              value of this attribute is FALSE."
    ::= { dot11PhyAntennaEntry 5 }

dot11TransmitIndicesFeedbackASOptionImplemented OBJECT-TYPE
        SYNTAX TruthValue
        MAX-ACCESS read-only
        STATUS current
        DESCRIPTION
              "This attribute, when TRUE, shall indicate that the
              transmit antenna selection based on antenna indices
              feedback is supported by the station implementation. The
              default value of this attribute is FALSE."
    ::= { dot11PhyAntennaEntry 6 }

dot11ExplicitCSIFeedbackASOptionImplemented OBJECT-TYPE
    SYNTAX TruthValue
    MAX-ACCESS read-only
    STATUS current
    DESCRIPTION
              "This attribute, when TRUE, shall indicate that the
              computation of CSI and feedback to support the peer to do
              antenna selection is supported by the station
              implementation. The default value of this attribute is
              FALSE."
    ::= { dot11PhyAntennaEntry 7 }

dot11TransmitIndicesComputationFeedbackASOptionImplemented OBJECT-TYPE
        SYNTAX TruthValue
        MAX-ACCESS read-only
        STATUS current
        DESCRIPTION
              "This attribute, when TRUE, shall indicate that the
              transmit antenna selection based on antenna indices
              selection computation and feedback the results to support
              the peer to do antenna selection is supported by the
              station implementation. The default value of this attribute
              is FALSE."
    ::= { dot11PhyAntennaEntry 8 }

dot11ReceiveAntennaSelectionOptionImplemented OBJECT-TYPE
        SYNTAX TruthValue
        MAX-ACCESS read-only
        STATUS current
        DESCRIPTION
              "This attribute, when TRUE, shall indicate that the receive
              antenna selection is supported by the station
              implementation. The default value of this attribute is
              FALSE."
    ::= { dot11PhyAntennaEntry 9 }

dot11TransmitSoundingPPDUOptionImplemented OBJECT-TYPE
        SYNTAX TruthValue
```


Copyright © 2006 IEEE. All rights reserved.
This is an unapproved IEEE Standards Draft, subject to change.

```
        MAX-ACCESS read-only
        STATUS current
        DESCRIPTION
              “This attribute, when TRUE, shall indicate that the
              transmission of sounding PPDUs is supported by the station
              implementation. The default value of this attribute is
              FALSE.”
    ::= { dot11PhyAntennaEntry 10 }
```

Insert the following dot11PhyHTTable behind dot11PhyERPTable:

```
--
*********************************************************************
-- * dot11 Phy HT TABLE
--
*********************************************************************
dot11PhyHTTable OBJECT-TYPE
       SYNTAX SEQUENCE OF Dot11PhyHTEntry
       MAX-ACCESS not-accessible
       STATUS current
       DESCRIPTION
             "Entry of attributes for dot11PhyHTTable. Implemented as a
             table indexed on ifIndex to allow for multiple instances on
             an Agent."
::= { dot11phy 15 }

dot11PhyHTEntry OBJECT-TYPE
      SYNTAX Dot11PhyHTEntry
      MAX-ACCESS not-accessible
      STATUS current
      DESCRIPTION
            "An entry in the dot11PhyHTEntry Table.
            ifIndex - Each 802.11 interface is represented by an
      ifEntry.
            Interface tables in this MIB module are indexed by ifIndex."
      INDEX {ifIndex}
      ::= { dot11PhyHTTable 1 }

Dot11PhyHTEntry ::= SEQUENCE {
      dot11FortyMHzOperationImplemented TruthValue,
      dot11FortyMHzOperationEnabled TruthValue,
      dot11CurentControlChannel INTEGER,
      dot11CurrentExtensionChannel INTEGER,
      dot11ExtensionChannelCCAOptionImplemented TruthValue,
      dot11NumberOfSpatialStreamsImplemented INTEGER,
      dot11NumberOfSpatialStreamsEnabled INTEGER,
      dot11GreenfieldOptionImplemented TruthValue,
      dot11GreenfieldOptionEnabled TruthValue,
      dot11ShortGIOptionInTwentyImplemented TruthValue,
      dot11ShortGIOptionInTwentyEnabled TruthValue,
      dot11ShortGIOptionInFortyImplemented TruthValue,
      dot11ShortGIOptionInFortyEnabled TruthValue,
      dot11AdvancedCodingOptionImplemented TruthValue,
```


Copyright © 2006 IEEE. All rights reserved.
This is an unapproved IEEE Standards Draft, subject to change.

```
        dot11AdvancedCodingOptionEnabled TruthValue,
        dot11TxSTBCOptionImplemented TruthValue,
        dot11TxSTBCOptionEnabled TruthValue,
        dot11RxSTBCOptionImplemented TruthValue,
        dot11RxSTBCOptionEnabled TruthValue,
        dot11BeamFormingOptionImplemented TruthValue,
        dot11BeamFormingOptionEnabled TruthValue
        }

dot11FortyMHzOperationImplemented OBJECT-TYPE
             SYNTAX TRUTHVALUE
             MAX-ACCESS read-only
             STATUS current
             DESCRIPTION
             "This attribute, when TRUE, shall indicate that the 40 MHz
        Operation is implemented. The default value of this attribute is
        FALSE."
        ::= { dot11PhyHTEntry 1 }

dot11FortyMHzOperationEnabled OBJECT-TYPE
             SYNTAX TRUTHVALUE
             MAX-ACCESS read-only
             STATUS current
             DESCRIPTION
             "This attribute, when TRUE, shall indicate that the 40 MHz
        Operation is enabled. The default value of this attribute is
        FALSE."
        ::= { dot11PhyHTEntry 2 }

dot11CurrentControlChannel OBJECT-TYPE
        SYNTAX INTEGER
        MAX-ACCESS read-only
        STATUS current
        DESCRIPTION
               "This attribute shall indicate the operating channel. If 40
               MHz mode is currently in use then this attribute shall
               indicate the control channel."
        ::= { dot11PhyHTEntry 3 }

dot11CurrentExtensionChannel OBJECT-TYPE
        SYNTAX INTEGER
        MAX-ACCESS read-only
        STATUS current
        DESCRIPTION
               "This attribute shall indicate the channel number of the
               extension channel. If 40 MHz mode is not currently in use,
               this attribuate value shall be 0."
        ::= { dot11PhyHTEntry 4 }

dot11ExtensionChannelCCAOptionImplemented OBJECT-TYPE
             SYNTAX TruthValue
             MAX-ACCESS read-only
             STATUS current
             DESCRIPTION
```


Copyright © 2006 IEEE. All rights reserved.
This is an unapproved IEEE Standards Draft, subject to change.

```
                "This attribute, when TRUE, shall indicate that making a
                CCA on the extension channel is supported. The default
                value of this attribute is FALSE."
          ::= { dot11PhyHTEntry 5}
```

Need CCA mode configs for control and extension channels.

```
dot11NumberOfSpatialStreamsImplemented OBJECT-TYPE
      SYNTAX INTEGER (1..4)
      MAX-ACCESS read-only
      STATUS current
      DESCRIPTION
              "This attribute shall indicate the maximum number of
              spatial streams implemented. The default value of this
              attribute is 2."
      ::= { dot11PhyHTEntry 5 }

dot11NumberOfSpatialStreamsEnabled OBJECT-TYPE
      SYNTAX INTEGER (1..4)
      MAX-ACCESS read-only
      STATUS current
      DESCRIPTION
              "This attribute shall indicate the maximum number of
              spatial streams enabled. The default value of this
              attribute is 2."
      ::= { dot11PhyHTEntry 6 }


dot11GreenFieldOptionImplemented OBJECT-TYPE
      SYNTAX TruthValue
      MAX-ACCESS read-only
      STATUS current
      DESCRIPTION
              "This attribute, when TRUE, shall indicate that the
              Greenfield option is implemented. The default value of this
              attribute is FALSE."
      ::= { dot11PhyHTEntry 7 }

dot11GreenFieldOptionEnabled OBJECT-TYPE
      SYNTAX TruthValue
      MAX-ACCESS read-write
      STATUS current
      DESCRIPTION
              "This attribute, when TRUE, shall indicate that the
              Greenfield option is enabled. The default value of this
              attribute is FALSE."
      ::= { dot11PhyHTEntry 8 }


dot11ShortGIOptionInTwentyImplemented OBJECT-TYPE
      SYNTAX TruthValue
      MAX-ACCESS read-only
      STATUS current
      DESCRIPTION
```


Copyright © 2006 IEEE. All rights reserved.
This is an unapproved IEEE Standards Draft, subject to change.

```
                "This attribute, when TRUE, shall indicate that the Short
                Guard option is implemented for 20 MHz operation. The
                default value of this attribute is FALSE."
        ::= { dot11PhyHTEntry 9 }

dot11ShortGIOptionInTwentyEnabled OBJECT-TYPE
        SYNTAX TruthValue
        MAX-ACCESS read-write
        STATUS current
        DESCRIPTION
                "This attribute, when TRUE, shall indicate that the Short
                Guard option is enabled for 20 MHz operation. The default
                value of this attribute is FALSE."
        ::= { dot11PhyHTEntry 10 }

dot11ShortGIOptionInFortyImplemented OBJECT-TYPE
        SYNTAX TruthValue
        MAX-ACCESS read-only
        STATUS current
        DESCRIPTION
                "This attribute, when TRUE, shall indicate that the Short
                Guard option is implemented for 40 MHz operation. The
                default value of this attribute is FALSE."
        ::= { dot11PhyHTEntry 11 }

dot11ShortGIOptionInFortyEnabled OBJECT-TYPE
        SYNTAX TruthValue
        MAX-ACCESS read-write
        STATUS current
        DESCRIPTION
                "This attribute, when TRUE, shall indicate that the Short
                Guard option is enabled for 40 MHz operation. The default
                value of this attribute is FALSE."
        ::= { dot11PhyHTEntry 12 }



dot11AdvancedCodingOptionImplemented OBJECT-TYPE
              SYNTAX TruthValue
              MAX-ACCESS read-only
        STATUS current
        DESCRIPTION
                "This attribute, when TRUE, shall indicate that the
                Advanced Coding option is implemented. The default value of
                this attribute is FALSE."
        ::= { dot11PhyHTEntry 13 }

dot11AdvancedCodingOptionEnabled OBJECT-TYPE
              SYNTAX TruthValue
              MAX-ACCESS read-only
        STATUS current
        DESCRIPTION
                "This attribute, when TRUE, shall indicate that the
                Advanced Coding option is enabled. The default value of
                this attribute is FALSE."
        ::= { dot11PhyHTEntry 14 }
```


Copyright © 2006 IEEE. All rights reserved.
This is an unapproved IEEE Standards Draft, subject to change.

```
dot11TxSTBCOptionImplemented OBJECT-TYPE
            SYNTAX TruthValue
            MAX-ACCESS read-only
      STATUS current
      DESCRIPTION
             "This attribute, when TRUE, shall indicate that the entity
             is capable of transmitting frames using Space-Time Block
             Code (STBC) option. The default value of this attribute is
             FALSE."
      ::= { dot11PhyHTEntry 15 }

dot11TxSTBCOptionEnabled OBJECT-TYPE
            SYNTAX TruthValue
            MAX-ACCESS read-only
      STATUS current
      DESCRIPTION
             "This attribute, when TRUE, shall indicate that the
             entity's capability of transmitting frames using Space-Time
             Block Code (STBC) option is enabled. The default value of
             this attribute is FALSE."
      ::= { dot11PhyHTEntry 16 }

dot11RxSTBCOptionImplemented OBJECT-TYPE
            SYNTAX TruthValue
            MAX-ACCESS read-only
      STATUS current
      DESCRIPTION
             "This attribute, when TRUE, shall indicate that the entity
             is capable of receiving frames that are sent using the
             Space-Time Block Code (STBC). The default value of this
             attribute is FALSE."
      ::= { dot11PhyHTEntry 17 }

dot11RxSTBCOptionEnabled OBJECT-TYPE
            SYNTAX TruthValue
            MAX-ACCESS read-only
      STATUS current
      DESCRIPTION
             "This attribute, when TRUE, shall indicate that the
             entity's capability of receiving frames that are sent using
             the Space-Time Block Code (STBC) is enabled. The default
             value of this attribute is FALSE."
      ::= { dot11PhyHTEntry 18 }


dot11BeamFormingOptionImplemented OBJECT-TYPE
            SYNTAX TruthValue
            MAX-ACCESS read-only
      STATUS current
      DESCRIPTION
             "This attribute, when TRUE, shall indicate that the Beam
             Forming option is implemented. The default value of this
             attribute is FALSE."
      ::= { dot11PhyHTEntry 19 }
```


Copyright © 2006 IEEE. All rights reserved.
This is an unapproved IEEE Standards Draft, subject to change.

```
dot11BeamFormingOptionEnabled OBJECT-TYPE
            SYNTAX TruthValue
            MAX-ACCESS read-only
      STATUS current
      DESCRIPTION
             "This attribute, when TRUE, shall indicate that the Beam
             Forming option is enabled. The default value of this
             attribute is FALSE."
      ::= { dot11PhyHTEntry 20 }

--
*********************************************************************
-- * End of dot11 PHY HT TABLE
--
*********************************************************************

--
*********************************************************************
-- * dot11 Supported MCS Tx TABLE
--
*********************************************************************
dot11SupportedMCSTxTable OBJECT-TYPE
      SYNTAX SEQUENCE OF Dot11SupportedMCSTxEntry
      MAX-ACCESS not-accessible
      STATUS current
      DESCRIPTION
             "The Transmit MCS supported by the PLCP and PMD,
             represented by a count from 1 to 127, subject to
             limitations of each individual PHY."
      ::= { dot11phy 16 }

dot11SupportedMCSTxEntry OBJECT-TYPE
      SYNTAX Dot11SupportedDataRatesTxEntry
      MAX-ACCESS not-accessible
      STATUS current
      DESCRIPTION
            "An Entry (conceptual row) in the dot11SupportedMCSTx Table.
            ifIndex - Each IEEE 802.11 interface is represented by an
            ifEntry. Interface tables in this MIB module are indexed by
      ifIndex."
      INDEX { ifIndex,
            dot11SupportedMCSTxIndex }
      ::= { dot11SupportedMCSTxTable 1 }

Dot11SupportedMCSTxEntry ::=
      SEQUENCE { dot11SupportedMCSTxIndex Integer32,
      dot11SupportedMCSTxValue Integer32 }

dot11SupportedMCSTxIndex OBJECT-TYPE
      SYNTAX Integer32 (1..255)
      MAX-ACCESS not-accessible
      STATUS current
      DESCRIPTION
             "Index object that identifies which MCS to access. Range is
             1..255."
::= { dot11SupportedMCSTxEntry 1 }
```


Copyright © 2006 IEEE. All rights reserved.
This is an unapproved IEEE Standards Draft, subject to change.

```
dot11SupportedMCSTxValue OBJECT-TYPE
      SYNTAX Integer32 (1..127)
      MAX-ACCESS read-only
      STATUS current
      DESCRIPTION
             "The Transmit MCS supported by the PLCP and PMD,
             represented by a count from 1 to 127, subject to
             limitations of each individual PHY."
::= { dot11SupportedDataRatesTxEntry 2 }
--
*********************************************************************
-- * End of dot11 Supported MCS Tx TABLE
--
*********************************************************************

--
*********************************************************************
-- * dot11 Supported MCS Rx TABLE
--
*********************************************************************
dot11SupportedMCSRxTable OBJECT-TYPE
      SYNTAX SEQUENCE OF Dot11SupportedMCSRxEntry
      MAX-ACCESS not-accessible
      STATUS current
      DESCRIPTION
             "The receive MCS supported by the PLCP and PMD, represented
             by a count from 1 to 127, subject to limitations of each
             individual PHY."
      ::= { dot11phy 16 }

dot11SupportedMCSRxEntry OBJECT-TYPE
      SYNTAX Dot11SupportedDataRatesRxEntry
      MAX-ACCESS not-accessible
      STATUS current
      DESCRIPTION
            "An Entry (conceptual row) in the dot11SupportedMCSRx Table.
            ifIndex - Each IEEE 802.11 interface is represented by an
            ifEntry. Interface tables in this MIB module are indexed by
      ifIndex."
      INDEX { ifIndex,
            dot11SupportedMCSRxIndex }
      ::= { dot11SupportedMCSRxTable 1 }

Dot11SupportedMCSRxEntry ::=
      SEQUENCE { dot11SupportedMCSRxIndex Integer32,
      dot11SupportedMCSRxValue Integer32 }

dot11SupportedMCSRxIndex OBJECT-TYPE
      SYNTAX Integer32 (1..255)
      MAX-ACCESS not-accessible
      STATUS current
      DESCRIPTION
             "Index object that identifies which MCS to access. Range is
             1..255."
::= { dot11SupportedMCSTxEntry 1 }
```


Copyright © 2006 IEEE. All rights reserved.
This is an unapproved IEEE Standards Draft, subject to change.

```
dot11SupportedMCSRxValue OBJECT-TYPE
      SYNTAX Integer32 (1..127)
      MAX-ACCESS read-only
      STATUS current
      DESCRIPTION
            "The receive MCS supported by the PLCP and PMD, represented
            by a count from 1 to 127, subject to limitations of each
            individual PHY."
::= { dot11SupportedDataRatesTxEntry 2 }

--
*********************************************************************
-- * End of dot11 Supported MCS Rx TABLE
--
*********************************************************************

--
            ************************************************************
            ***********
-- * dot11 Tx BF Config TABLE
--
            ************************************************************
            ***********
dot11TxBFConfigTable OBJECT-TYPE
       SYNTAX SEQUENCE OF Dot11TxBFConfigEntry
       MAX-ACCESS not-accessible
       STATUS current
       DESCRIPTION
            "Entry of attributes for dot11TxBFConfigTable. Implemented
            as a table indexed on ifIndex to allow for multiple
            instances on an Agent."
       ::= { dot11phy 18 }

dot11TxBFConfigEntry OBJECT-TYPE
       SYNTAX Dot11TxBFConfigEntry
       MAX-ACCESS not-accessible
       STATUS current
       DESCRIPTION
            "An entry in the dot11TxBFConfig Table.

            ifIndex - Each 802.11 interface is represented by an
            ifEntry. Interface tables in this MIB module are indexed by
            ifIndex."
       INDEX {ifIndex}
       ::= { dot11TxBFConfigTable 1 }

Dot11PhyHTEntry ::= SEQUENCE {
       dot11ReceiveStaggerSoundingOptionImplemented TruthValue,
       dot11TransmitStaggerSoundingOptionImplemented TruthValue,
       dot11ReceiveZLFOptionImplemented TruthValue,
       dot11TransmitZLFOptionImplemented TruthValue,
       dot11ImplicitTxBFOptionImplemented TruthValue,
       dot11CalibrationOptionImplemented INTEGER,
       dot11ExplicitCSITxBFOptionImplemented TruthValue,
```


Copyright © 2006 IEEE. All rights reserved.
This is an unapproved IEEE Standards Draft, subject to change.

```
        dot11ExplicitUncompressedSteeringMatrixOptionImplemented
              TruthValue,
        dot11ExplicitBFCSIFeedbackOptionImplemented INTEGER,
        dot11ExplicitUncompressedSteeringMatrixFeedbackOptionImplemented
              INTEGER,
        dot11ExplicitCompressedSteeringMatrixFeedbackOptionImplemented
              INTEGER,
        dot11NumberBeamFormingCSISupportAntenna INTEGER,
        dot11NumberUncompressedSteeringMatrixSupportAntenna INTEGER,
        dot11NumberCompressedSteeringMatrixSupportAntenna INTEGER
 }

dot11ReceiveStaggerSoundingOptionImplemented OBJECT-TYPE
        SYNTAX TruthValue
        MAX-ACCESS read-only
        STATUS current
        DESCRIPTION
              "This attribute, when TRUE, shall indicate that the STA
              implementation supports the receiving of staggered sounding
              frames. The default value of this attribute is FALSE."
        ::= { dot11TxBFConfigEntry 1 }

dot11TransmitStaggerSoundingOptionImplemented OBJECT-TYPE
        SYNTAX TruthValue
        MAX-ACCESS read-only
        STATUS current
        DESCRIPTION
              "This attribute, when TRUE, shall indicate that the STA
              implementation supports the transmission of staggered
              sounding frames. The default value of this attribute is
              FALSE."
        ::= { dot11TxBFConfigEntry 2 }

dot11ReceiveZLFOptionImplemented OBJECT-TYPE
        SYNTAX TruthValue
        MAX-ACCESS read-only
        STATUS current
        DESCRIPTION
              "This attribute, when TRUE, shall indicate that the STA
              implementation is capable of receiving ZLF as sounding
              frames. The default value of this attribute is FALSE."
        ::= { dot11TxBFConfigEntry 3 }

dot11TransmitZLFOptionImplemented OBJECT-TYPE
        SYNTAX TruthValue
        MAX-ACCESS read-only
        STATUS current
        DESCRIPTION
              "This attribute, when TRUE, shall indicate that the STA
              implementation is capable of transmitting ZLF as sounding
              frames. The default value of this attribute is FALSE."
        ::= { dot11TxBFConfigEntry 4 }

dot11ImplicitTxBFOptionImplemented OBJECT-TYPE
        SYNTAX TruthValue
        MAX-ACCESS read-only
```


Copyright © 2006 IEEE. All rights reserved.
This is an unapproved IEEE Standards Draft, subject to change.

```
        STATUS current
        DESCRIPTION
              "This attribute, when TRUE, shall indicate that STA
              implementation is capable of applying implicit transmit
              beamforming. The default value of this attribute is FALSE."
        ::= { dot11TxBFConfigEntry 5 }

dot11CalibrationOptionImplemented OBJECT-TYPE
        SYNTAX INTEGER { inCapable (0), unableToInitiate (1),
              ableToInitiate (2), fullyCapabile (3) }
        MAX-ACCESS read-only
        STATUS current
        DESCRIPTION
              "This attribute shall indicate the level of calibration
              supported by the STA implementation. The default value of
              this attribute is 0."
        ::= { dot11TxBFConfigEntry 6 }

dot11ExplicitCSITxBFOptionImplemented OBJECT-TYPE
        SYNTAX TruthValue
        MAX-ACCESS read-only
        STATUS current
        DESCRIPTION
              "This attribute, when TRUE, shall indicate that STA
              implementation is capable of applying transmit beamforming
              using CSI explicit feedback in its transmission. The
              default value of this attribute is FALSE."
        ::= { dot11TxBFConfigEntry 7 }

dot11ExplicitUncompressedSteeringMatrixOptionImplemented OBJECT-TYPE
        SYNTAX TruthValue
        MAX-ACCESS read-only
        STATUS current
        DESCRIPTION
              "This attribute, when TRUE, shall indicate that STA
              implementation is capable of applying transmit beamforming
              using uncompressed steering matrix explicit feedback in its
              transmission. The default value of this attribute is
              FALSE."
        ::= { dot11TxBFConfigEntry 8 }


dot11ExplicitBFCSIFeedbackOptionImplemented OBJECT-TYPE
        SYNTAX INTEGER { inCapable (0), unsolicited (1), immediate (2),
              unsolicitedImmediate (3), aggregated (4),
              unsolicitedAggregated (5), immediateAggregated(6),
              unsolicitedImmediateAggregated (7) }
        MAX-ACCESS read-only
        STATUS current
        DESCRIPTION
              "This attribute shall indicate the level of CSI explicit
              feedback returned by the STA implementation. The default
              value of this attribute is 0."
        ::= { dot11TxBFConfigEntry 9 }
```


Copyright © 2006 IEEE. All rights reserved.
This is an unapproved IEEE Standards Draft, subject to change.

```
dot11ExplicitUncompressedSteeringMatrixFeedbackOptionImplemented OBJECT-
             TYPE
       SYNTAX INTEGER { inCapable (0), unsolicited (1), immediate (2),
             unsolicitedImmediate (3), aggregated (4),
             unsolicitedAggregated (5), immediateAggregated(6),
             unsolicitedImmediateAggregated (7) }
       MAX-ACCESS read-only
       STATUS current
       DESCRIPTION
             "This attribute shall indicate the level of uncompressed
             steering matrix explicit feedback returned by the STA
             implementation. The default value of this attribute is 0."
       ::= { dot11TxBFConfigEntry 10 }

dot11ExplicitCompressedSteeringMatrixFeedbackOptionImplemented OBJECT-
             TYPE
       SYNTAX INTEGER { inCapable (0), unsolicited (1), immediate (2),
             unsolicitedImmediate (3), aggregated (4),
             unsolicitedAggregated (5), immediateAggregated(6),
             unsolicitedImmediateAggregated (7) }
       MAX-ACCESS read-only
       STATUS current
       DESCRIPTION
             "This attribute shall indicate the level of uncompressed
             steering matrix explicit feedback returned by the STA
             implementation. The default value of this attribute is 0."
       ::= { dot11TxBFConfigEntry 11 }

dot11NumberBeamFormingCSISupportAntenna OBJECT-TYPE
            SYNTAX INTEGER (1..4)
            MAX-ACCESS read-only
            STATUS current
            DESCRIPTION
             "This attribute shall indicate the maximum number of
             beamform antennas the beamformee can support when CSI
             feedback is required."
       ::= { dot11TxBFConfigEntry 12 }

dot11NumberUncompressedSteeringMatrixSupportAntenna OBJECT-TYPE
            SYNTAX INTEGER (1..4)
            MAX-ACCESS read-only
            STATUS current
            DESCRIPTION
             "This attribute shall indicate the maximum number of
             beamform antennas the beamformee can support when
             uncompressed steering matrix feedback is required."
       ::= { dot11TxBFConfigEntry 13 }

dot11NumberCompressedSteeringMatrixSupportAntenna OBJECT-TYPE
            SYNTAX INTEGER (1..4)
            MAX-ACCESS read-only
            STATUS current
            DESCRIPTION
             "This attribute shall indicate the maximum number of
             beamform antennas the beamformee can support when
             compressed steering matrix feedback is required."
```


Copyright © 2006 IEEE. All rights reserved.
This is an unapproved IEEE Standards Draft, subject to change.

```
        ::= { dot11TxBFConfigEntry 13 }

--
             ************************************************************
             ***********
-- * End of dot11 Tx BF Config TABLE
--
             ************************************************************
             ***********
```

Change dot11Compliance as shown:

```
dot11Compliance MODULE-COMPLIANCE
       STATUS current
       DESCRIPTION
             "The compliance statement for SNMPv2 entities that
             implement the IEEE 802.11 MIB."
       MODULE -- this module
       MANDATORY-GROUPS {
                dot11SMTbase~~6~~7,
                dot11MACbase~~2~~3, dot11CountersGroup~~2~~3,
                dot11SmtAuthenticationAlgorithms,
                dot11ResourceTypeID, dot11PhyOperationComplianceGroup }
```

Insert at the end of the compliance statements behind dot11PhyERPComplianceGroup the following component of the compliance statement:

```
GROUP dot11PhyHTComplianceGroup
       DESCRIPTION
             "Implementation of this group is required when object
             dot11PHYType has the value of ht. This group is mutually
             exclusive with the groups dot11PhyIRComplianceGroup and
             dot11PhyFHSSComplianceGroup"
```

Change the status of dot11PHYAntennasComplianceGroup to deprecated as shown below:

```
dot11PhyAntennaComplianceGroup OBJECT-GROUP
       OBJECTS
             { dot11CurrentTxAntenna, dot11DiversitySupport,
             dot11CurrentRxAntenna }
       STATUS ~~current~~deprecated
       DESCRIPTION
                "Attributes for Data Rates for IEEE 802.11."
       ::= { dot11Groups 8 }
```

Change the status of dot11MACbase2 as deprecated as shown:

```
dot11MACbase2 OBJECT-GROUP
       OBJECTS { dot11MACAddress, dot11Address,
                dot11GroupAddressesStatus,
                dot11RTSThreshold, dot11ShortRetryLimit,
                dot11LongRetryLimit, dot11FragmentationThreshold,
                dot11MaxTransmitMSDULifetime,
                dot11MaxReceiveLifetime, dot11ManufacturerID,
                dot11ProductID, dot11CAPLimit, dot11HCCWmin,
```


Copyright © 2006 IEEE. All rights reserved.
This is an unapproved IEEE Standards Draft, subject to change.

```
                  dot11HCCWmax, dot11HCCAIFSN,
                  dot11ADDBAResponseTimeout, dot11ADDTSResponseTimeout,
                  dot11ChannelUtilizationBeaconInterval,
dot11ScheduleTimeout,
                  dot11DLSResponseTimeout, dot11QAPMissingAckRetryLimit,
                  dot11EDCAAveragingPeriod }
        STATUS ~~current~~deprecated
        DESCRIPTION
              "The MAC object class provides the necessary support for
              the access control, generation, and verification of frame
              check sequences (FCSs), and proper delivery of valid data
              to upper layers."
        ::= { dot11Groups 31 }
```

Change the status of dot11CountersGroup2 to deprecated as shown below:

```
dot11CountersGroup2 OBJECT-GROUP
        OBJECTS { dot11TransmittedFragmentCount,
                  dot11MulticastTransmittedFrameCount,
                  dot11FailedCount, dot11ReceivedFragmentCount,
                  dot11MulticastReceivedFrameCount,
                  dot11FCSErrorCount,
                  dot11WEPUndecryptableCount,
                  dot11TransmittedFrameCount,
                  dot11QosDiscardedFragmentCount,
                  dot11AssociatedStationCount,
                  dot11QosCFPollsReceivedCount,
                  dot11QosCFPollsUnusedCount,
                  dot11QosCFPollsUnusableCount }
        STATUS ~~current~~deprecated
        DESCRIPTION
              "Attributes from the dot11CountersGroup that are not
              described in the dot11MACStatistics group. These objects
              are mandatory."
::= { dot11Groups 32 }
```

Change the status of dot11SMTbase6 to deprecated as shown below:

```
dot11SMTbase6 OBJECT-GROUP
        OBJECTS
              { dot11MediumOccupancyLimit, dot11CFPollable,
              dot11CFPPeriod, dot11CFPMaxDuration,
              dot11AuthenticationResponseTimeOut,
              dot11PrivacyOptionImplemented, dot11PowerManagementMode,
              dot11DesiredSSID, dot11DesiredBSSType,
              dot11OperationalRateSet, dot11BeaconPeriod,
              dot11DTIMPeriod, dot11AssociationResponseTimeOut,
              dot11DisassociateReason, dot11DisassociateStation,
              dot11DeauthenticateReason, dot11DeauthenticateStation,
              dot11AuthenticateFailStatus, dot11AuthenticateFailStation,
              dot11MultiDomainCapabilityImplemented,
              dot11MultiDomainCapabilityEnabled, dot11CountryString,
              dot11RSNAOptionImplemented,
              dot11RegulatoryClassesImplemented,
              dot11RegulatoryClassesRequired, dot11QosOptionImplemented,
```


Copyright © 2006 IEEE. All rights reserved.
This is an unapproved IEEE Standards Draft, subject to change.

```
                dot11ImmediateBlockAckOptionImplemented,
                dot11DelayedBlockAckOptionImplemented,
                dot11DirectOptionImplemented, dot11APSDOptionImplemented,
                dot11QAckOptionImplemented, dot11QBSSLoadOptionImplemented,
                dot11QueueRequestOptionImplemented,
                dot11TXOPRequestOptionImplemented,
                dot11MoreDataAckOptionImplemented, dot11AssociateinNQBSS,
                dot11DLSAllowedInQBSS, dot11DLSAllowed }
        STATUS ~~current~~deprecated
        DESCRIPTION
                "The SMTbase6 object class provides the necessary support
                at the STA to manage the processes in the STA such that the
                STA may work cooperatively as a part of an IEEE 802.11
                network."
        ::= { dot11Groups 34 }
```

Change the Optional Groups at the end of theOptional Groups:

```
-- OPTIONAL-GROUPS { dot11SMTprivacy, dot11MACStatistics,
--      ~~dot11PhyAntennaComplianceGroup,~~ dot11PhyTxPowerComplianceGroup,
--      dot11PhyRegDomainsSupportGroup,
--      dot11PhyAntennasListGroup, dot11PhyRateGroup,
--      ~~dot11SMTbase3,~~ dot11MultiDomainCapabilityGroup,
--      dot11PhyFHSSComplianceGroup2, dot11RSNAadditions,
--      dot11RegulatoryClassesGroup, dot11Qosadditions,
--      dot11PhyAntennaComplianceGroup2, dot11SMTbase7,
dot11HTMACadditions,
--      dot11PhyMCSGroup, dot11TxBFGroup }
```

Insert the following units of conformance:

```
dot11PhyAntennaComplianceGroup2 OBJECT-GROUP
        OBJECTS
                { dot11CurrentTxAntenna, dot11DiversitySupport,
                dot11CurrentRxAntenna,
                dot11AntennaSelectionOptionImpemented,
                dot11TransmitExplicitCSIFeedbackASOptionImplemented,
                dot11TransmitIndicesFeedbackASOptionImplemented,
                dot11ExplicitCSIFeedbackASOptionImplemented,
                dot11TransmitIndicesComputationFeedbackASOptionImplemented,
                dot11ReceiveAntennaSelectionOptionImplemented }
        STATUS current
        DESCRIPTION
                 "Attributes for Data Rates for IEEE 802.11."
        ::= { dot11Groups 35 }

dot11MACbase3 OBJECT-GROUP
        OBJECTS { dot11MACAddress, dot11Address,
                  dot11GroupAddressesStatus,
                  dot11RTSThreshold, dot11ShortRetryLimit,
                  dot11LongRetryLimit, dot11FragmentationThreshold,
                  dot11MaxTransmitMSDULifetime,
                  dot11MaxReceiveLifetime, dot11ManufacturerID,
                  dot11ProductID, dot11CAPLimit, dot11HCCWmin,
                  dot11HCCWmax, dot11HCCAIFSN,
```


Copyright © 2006 IEEE. All rights reserved.
This is an unapproved IEEE Standards Draft, subject to change.

```
                  dot11ADDBAResponseTimeout, dot11ADDTSResponseTimeout,
                  dot11ChannelUtilizationBeaconInterval,
dot11ScheduleTimeout,
                  dot11DLSResponseTimeout, dot11QAPMissingAckRetryLimit,
                  dot11EDCAAveragingPeriod, dot11HTOperatingMode,
                  dot11RIFSMode, dot11PSMPControlledAccess,
                  dot11ServiceIntervalGranularity,
dot11DualCTSProtection,
        dot11LSIGTXOPFullProtectionEnabled,
                  dot11NonGFEntitiesPresent, dot11PCOActivated,
                  dot11PCO40MaxDuration, dot11PCO20MaxDuration,
                  dot11PCO40MinDuration, dot11PCO20MinDuration }
        STATUS current
        DESCRIPTION
              "The MAC object class provides the necessary support for
              the access control, generation, and verification of frame
              check sequences (FCSs), and proper delivery of valid data
              to upper layers."
        ::= { dot11Groups 36 }
```

Change the status of dot11CountersGroup2 to deprecated as shown below:

```
dot11CountersGroup3 OBJECT-GROUP
        OBJECTS { dot11TransmittedFragmentCount,
                  dot11MulticastTransmittedFrameCount,
                  dot11FailedCount, dot11ReceivedFragmentCount,
                  dot11MulticastReceivedFrameCount,
                  dot11FCSErrorCount,
                  dot11WEPUndecryptableCount,
                  dot11TransmittedFrameCount,
                  dot11QosDiscardedFragmentCount,
                  dot11AssociatedStationCount,
                  dot11QosCFPollsReceivedCount,
                  dot11QosCFPollsUnusedCount,
                  dot11QosCFPollsUnusableCount,
                  dot11QoSCFPollsLostCount,
                  dot11TransmittedAMSDUCount,
                  dot11FailedAMSDUCount,
                  dot11RetryAMSDUCount,
                  dot11MultipleRetryAMSDUCount,
                  dot1TransmittedOctetsInAMSDUCount,
                  dot11AMSDUAckFailureCount,
                  dot11ReceivedAMSDUCount,
                  dot1ReceivedOctetsInAMSDUCount,
                  dot11TransmittedAMPDUCount,
                  dot11TransmittedMPDUsInAMPDUCount,
                  dot11TransmittedOctetsInAMPDUCount,
                  dot11AMPDUReceivedCount,
                  dot11MPDUInReceivedAMPDUCount,
                  dot11ReceivedOctetsInAMPDUCount,
                  dot11AMPDUDelimiterCRCErrorCount,
                  dot11ImplicitBARFailureCount,
                  dot11ExplicitBARFailureCount,
                  dot11ChannelWidthSwitchCount,
                  dot11TwentyMHzFrameTransmittedCount,
```


Copyright © 2006 IEEE. All rights reserved.
This is an unapproved IEEE Standards Draft, subject to change.

```
                    dot11FortyMHzFrameTransmittedCount,
                    dot11TwentyMHzFrameReceivedCount,
                    dot11FortyMHzFrameReceivedCount,
                    dot11PSMPSuccessCount,
                    dot11PSMPFailureCount,
                    dot11GrantedRDGUsedCount,
                    dot11GrantedRDGUnusedCount,
                    dot11TransmittedFramesInGrantedRDGCount,
                    dot11TransmittedOctetsInGrantedRDGCount,
                    dot11BeamformingCount,
                    dot11DualCTSSuccessCount,
                    dot11DualCTSFailureCount,
                    dot11STBCCTSSuccessCount,
                    dot11STBCCTSFailureCount,
                    dot11nonSTBCCTSSuccessCount,
                    dot11nonSTBCCTSFailureCount,
                    dot11RTSEPPSuccessCount,
                    dot11RTSEPPFailureCount }
         STATUS current
         DESCRIPTION
               "Attributes from the dot11CountersGroup that are not
               described in the dot11MACStatistics group. These objects
               are mandatory."
::= { dot11Groups 37 }


dot11SMTbase7 OBJECT-GROUP
         OBJECTS
               { dot11MediumOccupancyLimit, dot11CFPollable,
               dot11CFPPeriod, dot11CFPMaxDuration,
               dot11AuthenticationResponseTimeOut,
               dot11PrivacyOptionImplemented, dot11PowerManagementMode,
               dot11DesiredSSID, dot11DesiredBSSType,
               dot11OperationalRateSet, dot11BeaconPeriod,
               dot11DTIMPeriod, dot11AssociationResponseTimeOut,
               dot11DisassociateReason, dot11DisassociateStation,
               dot11DeauthenticateReason, dot11DeauthenticateStation,
               dot11AuthenticateFailStatus, dot11AuthenticateFailStation,
               dot11MultiDomainCapabilityImplemented,
               dot11MultiDomainCapabilityEnabled, dot11CountryString,
               dot11RSNAOptionImplemented,
               dot11RegulatoryClassesImplemented,
               dot11RegulatoryClassesRequired, dot11QosOptionImplemented,
               dot11ImmediateBlockAckOptionImplemented,
               dot11DelayedBlockAckOptionImplemented,
               dot11DirectOptionImplemented, dot11APSDOptionImplemented,
               dot11QAckOptionImplemented, dot11QBSSLoadOptionImplemented,
               dot11QueueRequestOptionImplemented,
               dot11TXOPRequestOptionImplemented,
               dot11MoreDataAckOptionImplemented, dot11AssociateinNQBSS,
               dot11DLSAllowedInQBSS, dot11DLSAllowed,
               dot11HighThroughputOptionImpelemented }
        STATUS current
        DESCRIPTION
               "The SMTbase7 object class provides the necessary support
               at the STA to manage the processes in the STA such that the
```


Copyright © 2006 IEEE. All rights reserved.
This is an unapproved IEEE Standards Draft, subject to change.

```
              STA may work cooperatively as a part of an IEEE 802.11
              network."
       ::= { dot11Groups 38 }

dot11PhyMCSGroup OBJECT-GROUP
       OBJECTS { dot11SupportedMCSTxValue,
                 dot11SupportedMCSRxValue }
       STATUS current
       DESCRIPTION
              "Attributes for Modulation and Coding Schemes (MCS) for
              IEEE 802.11 HT."
       ::= { dot11Groups 39 }

dot1PhyHTComplianceGroup OBJECT-GROUP
       OBJECTS { dot11HighThroughputOptionImplemented,
                 dot11FortyMHzOperationImplemented,
                 dot11FortyMHzOperationEnabled,
                 dot11CurrentControlChannel,
                 dot11CurrentExtensionChannel,
                 dot11GreenfieldOptionImplemented,
                 dot11GreenfieldOptionEnabled,
                 dot11ShortGIOptionInTwentyImplemented,
                 dot11ShortGIOptionInTwentyEnabled,
                 dot11ShortGIOptionInFortyImplemented,
                 dot11ShortGIOptionInFortyEnabled,
                 dot11AdvancedCodingOptionImplemented,
                 dot11AdvancedCodingOptionEnabled,
                 dot11TxSTBCOptionImplemented,
                 dot11TxSTBCOptionEnabled,
                 dot11RxSTBCOptionImplemented,
                 dot11RxSTBCOptionEnabled,
                 dot11BeamFormingOptionImplemented,
                 dot11BeamFormingOptionImplemented
                  }
       STATUS current
       DESCRIPTION
              "Attributes that configure the HT for IEEE 802.11."
       ::= { dot11Groups 40 }

dot11HTMACAdditions OBJECT-GROUP
        OBJECTS { dot11HTOperationalMCSSet,
                dot11MIMOPowerSave,
                dot11NDelayedBlockAckOptionImplemented,
                dot11MaxAMSDULength,
                dot11PSMPOPtionImplemented,
                dot11STBCControlFrameOptionImplemented,
                dot11LsigTxopProtectionOptionImplemented,
                dot11MaxRxAMPDUFactor,
                dot11MPDUDensity,
                dot11PCOOptionImplemented,
                dot11TransitionTime,
                dot11MCSFeedbackOptionImplemented
                  }
       STATUS current
       DESCRIPTION
              "Attributes that configure the HT for IEEE 802.11."
```


Copyright © 2006 IEEE. All rights reserved.
This is an unapproved IEEE Standards Draft, subject to change.

```
        ::= { dot11Groups 41 }

dot11TxBFGroup OBJECT-GROUP
         OBJECTS { dot11ReceiveStaggerSoundingOptionImplemented,
         dot11TransmitStaggerSoundingOptionImplemented,
         dot11ReceiveZLFOptionImplemented,
         dot11TransmitZLFOptionImplemented,
         dot11ImplicitTxBFOptionImplemented,
         dot11CalibrationOptionImplemented,
         dot11ExplicitCSITxBFOptionImplemented,
         dot11ExplicitUncompressedSteeringMatrixOptionImplemented,
         dot11ExplicitBFCSIFeedbackOptionImplemented,
         dot11ExplicitUncompressedSteeringMatrixFeedbackOptionImplemented
,
         dot11ExplicitCompressedSteeringMatrixFeedbackOptionImplemented,
         dot11NumberBeamFormingCSISupportAntenna,
         dot11NumberUncompressedSteeringMatrixSupportAntenna,
         dot11NumberCompressedSteeringMatrixSupportAntenna
         }
        STATUS current
        DESCRIPTION
              "Attributes that configure the Beamforming for IEEE 802.11
              HT."
        ::= { dot11Groups 42 }
```


Copyright © 2006 IEEE. All rights reserved.
This is an unapproved IEEE Standards Draft, subject to change.

Copyright © 2006 IEEE. All rights reserved.
This is an unapproved IEEE Standards Draft, subject to change.

Copyright © 2006 IEEE. All rights reserved.
This is an unapproved IEEE Standards Draft, subject to change.

Copyright © 2006 IEEE. All rights reserved.
This is an unapproved IEEE Standards Draft, subject to change.

Copyright © 2006 IEEE. All rights reserved.
This is an unapproved IEEE Standards Draft, subject to change.

Copyright © 2006 IEEE. All rights reserved.
This is an unapproved IEEE Standards Draft, subject to change.

Copyright © 2006 IEEE. All rights reserved.
This is an unapproved IEEE Standards Draft, subject to change.

Copyright © 2006 IEEE. All rights reserved.
This is an unapproved IEEE Standards Draft, subject to change.

Copyright © 2006 IEEE. All rights reserved.
This is an unapproved IEEE Standards Draft, subject to change.

Copyright © 2006 IEEE. All rights reserved.
This is an unapproved IEEE Standards Draft, subject to change.

1

Copyright © 2006 IEEE. All rights reserved.
This is an unapproved IEEE Standards Draft, subject to change.

Insert Annex P

Copyright © 2006 IEEE. All rights reserved.
This is an unapproved IEEE Standards Draft, subject to change.

Annex P

(normative)

LDPC Matrix Definitions

Table n103
Matrix prototypes of parity-check matrices for codeword block length *n*= 648 bits.
Subblock size is *Z*= 27 bits.

(a)
Code rate *R*= 1/2.

0	-	-	-	0	0	-	-	0	-	-	0	1	0	-	-	-	-	-	-	-	-	-	-
22	0	-	-	17	-	0	0	12	-	-	-	-	0	0	-	-	-	-	-	-	-	-	-
6	-	0	-	10	-	-	-	24	-	0	-	-	-	0	0	-	-	-	-	-	-	-	-
2	-	-	0	20	-	-	-	25	0	-	-	-	-	-	0	0	-	-	-	-	-	-	-
23	-	-	-	3	-	-	-	0	-	9	11	-	-	-	-	0	0	-	-	-	-	-	-
24	-	23	1	17	-	3	-	10	-	-	-	-	-	-	-	-	0	0	-	-	-	-	-
25	-	-	-	8	-	-	-	7	18	-	-	0	-	-	-	-	-	0	0	-	-	-	-
13	24	-	-	0	-	8	-	6	-	-	-	-	-	-	-	-	-	-	0	0	-	-	-
7	20	-	16	22	10	-	-	23	-	-	-	-	-	-	-	-	-	-	-	0	0	-	-
11	-	-	-	19	-	-	-	13	-	3	17	-	-	-	-	-	-	-	-	-	0	0	-
25	-	8	-	23	18	-	14	9	-	-	-	-	-	-	-	-	-	-	-	-	-	0	0
3	-	-	-	16	-	-	2	25	5	-	-	1	-	-	-	-	-	-	-	-	-	-	0

(b)

Code rate *R*= 2/3.

25	26	14	-	20	-	2	-	4	-	-	8	-	16	-	18	1	0	-	-	-	-	-	-
10	9	15	11	-	0	-	1	-	-	18	-	8	-	10	-	-	0	0	-	-	-	-	-
16	2	20	26	21	-	6	-	1	26	-	7	-	-	-	-	-	-	0	0	-	-	-	-
10	13	5	0	-	3	-	7	-	-	26	-	-	13	-	16	-	-	-	0	0	-	-	-
23	14	24	-	12	-	19	-	17	-	-	-	20	-	21	-	0	-	-	-	0	0	-	-
6	22	9	20	-	25	-	17	-	8	-	14	-	18	-	-	-	-	-	-	-	0	0	-
14	23	21	11	20	-	24	-	18	-	19	-	-	-	-	22	-	-	-	-	-	-	0	0
17	11	11	20	-	21	-	26	-	3	-	-	18	-	26	-	1	-	-	-	-	-	-	0

Copyright © 2006 IEEE. All rights reserved.
This is an unapproved IEEE Standards Draft, subject to change.

(c)

Code rate *R*= 3/4.

16	17	22	24	9	3	14	-	4	2	7	-	26	-	2	-	21	-	1	0	-	-	-	-
25	12	12	3	3	26	6	21	-	15	22	-	15	-	4	-	-	16	-	0	0	-	-	-
25	18	26	16	22	23	9	-	0	-	4	-	4	-	8	23	11	-	-	-	0	0	-	-
9	7	0	1	17	-	-	7	3	-	3	23	-	16	-	-	21	-	0	-	-	0	0	-
24	5	26	7	1	-	-	15	24	15	-	8	-	13	-	13	-	11	-	-	-	-	0	0
2	2	19	14	24	1	15	19	-	21	-	2	-	24	-	3	-	2	1	-	-	-	-	0

(d)

Code rate *R*= 5/6.

17	13	8	21	9	3	18	12	10	0	4	15	19	2	5	10	26	19	13	13	1	0	-	-
3	12	11	14	11	25	5	18	0	9	2	26	26	10	24	7	14	20	4	2	-	0	0	-
22	16	4	3	10	21	12	5	21	14	19	5	-	8	5	18	11	5	5	15	0	-	0	0
7	7	14	14	4	16	16	24	24	10	1	7	15	6	10	26	8	18	21	14	1	-	-	0

Copyright © 2006 IEEE. All rights reserved.
This is an unapproved IEEE Standards Draft, subject to change.

Table n104
Matrix prototypes of parity-check matrices for codeword block length *n*= 1296 bits.
Subblock size is *Z*= 54 bits.

(a)
Code rate *R*= 1/2.

40	-	-	-	22	-	49	23	43	-	-	-	1	0	-	-	-	-	-	-	-	-	-	-
50	1	-	-	48	35	-	-	13	-	30	-	-	0	0	-	-	-	-	-	-	-	-	-
39	50	-	-	4	-	2	-	-	-	-	49	-	-	0	0	-	-	-	-	-	-	-	-
33	-	-	38	37	-	-	4	1	-	-	-	-	-	-	0	0	-	-	-	-	-	-	-
45	-	-	-	0	22	-	-	20	42	-	-	-	-	-	-	0	0	-	-	-	-	-	-
51	-	-	48	35	-	-	-	44	-	18	-	-	-	-	-	-	0	0	-	-	-	-	-
47	11	-	-	-	17	-	-	51	-	-	-	0	-	-	-	-	-	0	0	-	-	-	-
5	-	25	-	6	-	45	-	13	40	-	-	-	-	-	-	-	-	-	0	0	-	-	-
33	-	-	34	24	-	-	-	23	-	-	46	-	-	-	-	-	-	-	-	0	0	-	-
1	-	27	-	1	-	-	-	38	-	44	-	-	-	-	-	-	-	-	-	-	0	0	-
-	18	-	-	23	-	-	8	0	35	-	-	-	-	-	-	-	-	-	-	-	-	0	0
49	-	17	-	30	-	-	-	34	-	-	19	1	-	-	-	-	-	-	-	-	-	-	0

(b)

Code rate *R*= 2/3.

39	31	22	43	-	40	4	-	11	-	-	50	-	-	-	6	1	0	-	-	-	-	-	-
25	52	41	2	6	-	14	-	34	-	-	-	24	-	37	-	-	0	0	-	-	-	-	-
43	31	29	0	21	-	28	-	-	2	-	-	7	-	17	-	-	-	0	0	-	-	-	-
20	33	48	-	4	13	-	26	-	-	22	-	-	46	42	-	-	-	-	0	0	-	-	-
45	7	18	51	12	25	-	-	-	50	-	-	5	-	-	-	0	-	-	-	0	0	-	-
35	40	32	16	5	-	-	18	-	-	43	51	-	32	-	-	-	-	-	-	-	0	0	-
9	24	13	22	28	-	-	37	-	-	25	-	-	52	-	13	-	-	-	-	-	-	0	0
32	22	4	21	16	-	-	-	27	28	-	38	-	-	-	8	1	-	-	-	-	-	-	0

(c)

Code rate *R*= 3/4.

39	40	51	41	3	29	8	36	-	14	-	6	-	33	-	11	-	4	1	0	-	-	-	-
48	21	47	9	48	35	51	-	38	-	28	-	34	-	50	-	50	-	-	0	0	-	-	-
30	39	28	42	50	39	5	17	-	6	-	18	-	20	-	15	-	40	-	-	0	0	-	-
29	0	1	43	36	30	47	-	49	-	47	-	3	-	35	-	34	-	0	-	-	0	0	-
1	32	11	23	10	44	12	7	-	48	-	4	-	9	-	17	-	16	-	-	-	-	0	0
13	7	15	47	23	16	47	-	43	-	29	-	52	-	2	-	53	-	1	-	-	-	-	0

Copyright © 2006 IEEE. All rights reserved.
This is an unapproved IEEE Standards Draft, subject to change.

(d)

Code rate R= 5/6.

48	29	37	52	2	16	6	14	53	31	34	5	18	42	53	31	45	-	46	52	1	0	-	-
17	4	30	7	43	11	24	6	14	21	6	39	17	40	47	7	15	41	19	-	-	0	0	-
7	2	51	31	46	23	16	11	53	40	10	7	46	53	33	35	-	25	35	38	0	-	0	0
19	48	41	1	10	7	36	47	5	29	52	52	31	10	26	6	3	2	-	51	1	-	-	0

Copyright © 2006 IEEE. All rights reserved.
This is an unapproved IEEE Standards Draft, subject to change.

Table n105
Matrix prototypes of parity-check matrices for codeword block length *n*=1944 bits.
Subblock size is *Z* = 81 bits.

(a)
Code rate *R*= 1/2.

57	-	-	-	50	-	11	-	50	-	79	-	1	0	-	-	-	-	-	-	-	-	-	-
3	-	28	-	0	-	-	-	55	7	-	-	-	0	0	-	-	-	-	-	-	-	-	-
30	-	-	-	24	37	-	-	56	14	-	-	-	-	0	0	-	-	-	-	-	-	-	-
62	53	-	-	53	-	-	3	35	-	-	-	-	-	-	0	0	-	-	-	-	-	-	-
40	-	-	20	66	-	-	22	28	-	-	-	-	-	-	-	0	0	-	-	-	-	-	-
0	-	-	-	8	-	42	-	50	-	-	8	-	-	-	-	-	0	0	-	-	-	-	-
69	79	79	-	-	-	56	-	52	-	-	-	0	-	-	-	-	-	0	0	-	-	-	-
65	-	-	-	38	57	-	-	72	-	27	-	-	-	-	-	-	-	-	0	0	-	-	-
64	-	-	-	14	52	-	-	30	-	-	32	-	-	-	-	-	-	-	-	0	0	-	-
-	45	-	70	0	-	-	-	77	9	-	-	-	-	-	-	-	-	-	-	-	0	0	-
2	56	-	57	35	-	-	-	-	-	12	-	-	-	-	-	-	-	-	-	-	-	0	0
24	-	61	-	60	-	-	27	51	-	-	16	1	-	-	-	-	-	-	-	-	-	-	0

(b)

Code rate *R*= 2/3.

61	75	4	63	56	-	-	-	-	-	-	8	-	2	17	25	1	0	-	-	-	-	-	-
56	74	77	20	-	-	-	64	24	4	67	-	7	-	-	-	-	0	0	-	-	-	-	-
28	21	68	10	7	14	65	-	-	-	23	-	-	-	75	-	-	-	0	0	-	-	-	-
48	38	43	78	76	-	-	-	-	5	36	-	15	72	-	-	-	-	-	0	0	-	-	-
40	2	53	25	-	52	62	-	20	-	-	44	-	-	-	-	0	-	-	-	0	0	-	-
69	23	64	10	22	-	21	-	-	-	-	-	68	23	29	-	-	-	-	-	-	0	0	-
12	0	68	20	55	61	-	40	-	-	-	52	-	-	-	44	-	-	-	-	-	-	0	0
58	8	34	64	78	-	-	11	78	24	-	-	-	-	-	58	1	-	-	-	-	-	-	0

(c)

Code rate *R*= 3/4.

48	29	28	39	9	61	-	-	-	63	45	80	-	-	-	37	32	22	1	0	-	-	-	-
4	49	42	48	11	30	-	-	-	49	17	41	37	15	-	54	-	-	-	0	0	-	-	-
35	76	78	51	37	35	21	-	17	64	-	-	-	59	7	-	-	32	-	-	0	0	-	-
9	65	44	9	54	56	73	34	42	-	-	-	35	-	-	-	46	39	0	-	-	0	0	-
3	62	7	80	68	26	-	80	55	-	36	-	26	-	9	-	72	-	-	-	-	-	0	0
26	75	33	21	69	59	3	38	-	-	-	35	-	62	36	26	-	-	1	-	-	-	-	0

Copyright © 2006 IEEE. All rights reserved.
This is an unapproved IEEE Standards Draft, subject to change.

(d)

Code rate R= 5/6.

13	48	80	66	4	74	7	30	76	52	37	60	-	49	73	31	74	73	23	-	1	0	-	-
69	63	74	56	64	77	57	65	6	16	51	-	64	-	68	9	48	62	54	27	-	0	0	-
51	15	0	80	24	25	42	54	44	71	71	9	67	35	-	58	-	29	-	53	0	-	0	0
16	29	36	41	44	56	59	37	50	24	-	65	4	65	52	-	4	-	73	52	1	-	-	0

Copyright © 2006 IEEE. All rights reserved.
This is an unapproved IEEE Standards Draft, subject to change.