UNITED STATES PATENT AND TRADEMARK OFFICE

BEFORE THE PATENT TRIAL AND APPEAL BOARD

INTEL CORPORATION,
Petitioner

v.

AX Wireless.
Patent Owner.

IPR2023-01138

U.S. Patent 10,554,459

DECLARATION OF THOMAS LAPORTA, PH.D. IN SUPPORT OF INTER PARTES REVIEW OF U.S. PATENT 10,554,459

Mail Stop PATENT BOARD
Patent Trial and Appeal Board
U.S. Patent & Trademark Office
P.O. Box 1450
Alexandria, VA 22313-1450

TABLE OF CONTENTS

I. QUALIFICATIONS 2

II. UNDERSTANDING OF RELEVANT LEGAL PRINCIPLES 8

III. ’459 PATENT 11

A. Overview of ’459 Patent 11

B. Technical Background 16

1. Communications System Overview 17

2. Physical Medium 19

3. ITU G.hn 21

a. G.9960 22

(i) Physical Coding Sub-Layer (PCS) 24

(ii) Physical Medium Attachment (PMA) Sub-Layer 25

(iii) Physical Medium Dependent (PMD) sub-layer 26

b. “G.hn: Extended PHY Frame Header” Contribution (July 2009) 27

c. “G.hn: Using Two Symbols for the Header of a PHY frame on Coax” Contribution 28

4. IEEE 802 30

a. OFDM PHY (802.11a) 30

(i) Operating Channels 30

(ii) Physical Layer 31

b. IEEE 802.11n 33

C. Level Of Ordinary Skill In The Art 34

D. Claim Construction 35

IV. GROUND 1: THE COMBINATION OF HANSEN AND JULY 2005 WWISE. 35

A. Overview of the Combination 35

TABLE OF CONTENTS
(continued)

Page

1. Hansen 35
   a. TGn Sync Proposal 38
   b. January 2005 WWiSE Proposal 42
   c. Hansen's "Compromise" Greenfield PPDU 44
2. July 2005 WWiSE 45
3. Motivation to Combine 50

B. Independent Claim 1 60
1. Preamble 62
2. "*Wireless OFDM Receiver*" Limitations 65
   a. First and Second Packet Types 65
   b. "Wireless OFDM Receiver" 68
3. "*Packet Type*" Limitations 72
   a. "First Packet Type" 73
      (i) Content 73
      (ii) Order of Transmission/Reception 81
   b. "Second Packet Type" 83
      (i) Content 83
      (ii) Order of Transmission/Reception 88
4. "*Demodulator*" Limitations 93
   a. "First Packet Type" - Order of Symbol Demodulation 96
   b. "Second Packet Type" - Order of Symbol Demodulation 98
   c. "Received in a Different Order" Limitations [1K]/[1L] 101
   d. "First channel bandwidth is at least two times wider than the second channel bandwidth" [1M] 104

TABLE OF CONTENTS
(continued)

Page

C. Independent Claim 9 106
D. Dependent Claims 110
1. Claims 2, 3, 10, and 11 110
2. Claims 5, 13 113
3. Claims 7 and 8 114
V. GROUND 2: THE COMBINATION OF HANSEN, JULY 2005 WWISE, AND CHOI RENDERS CLAIMS 1-3, 5, 7-11, AND 13 OBVIOUS 115
A. Overview of the Combination 116
1. Choi 116
2. Motivation to Combine 119
B. Independent Claim 1 122
C. Independent Claim 9 124
D. Dependent Claims 124
VI. CONCLUSION 125

I, Thomas LaPorta, Ph.D., declare as follows:

1. I have been retained by Perkins Coie LLP on behalf of Intel Corporation ("Petitioner"), to provide this Declaration concerning technical subject matter relevant to the petition for Inter Partes Review ("Petition") of U.S. Patent No. 10,554,459 to Kim et al. ("the '459 patent"). It is my understanding that the '459 patent is currently assigned to AX Wireless ("Patent Owner").

2. I am over 18 years of age. I have personal knowledge of the facts stated in this Declaration and could testify competently to them if asked to do so. I have reviewed and am familiar with the specification and the claims of the '459 patent. In general, I will cite to the specification of a United States patent using the following formats: (Patent No., Col:Line Number(s)) or (Patent No., Paragraph Number(s)). For example, the citation ('459 patent, 1:1-10) points to the '459 patent specification at column 1, lines 1-10. Also, for convenience, I use italics to denote limitations from the challenged claims.

3. All of the opinions contained in this Declaration are based on the documents I reviewed and my knowledge and professional judgment. In forming the opinions expressed in this Declaration, I reviewed the documents listed in the

attached Appendix. I have also reviewed and am familiar with any other document referred to in this Declaration.

4. I have been asked to provide my technical opinions regarding how a person of ordinary skill in the art ("POSITA") would have understood the claims of the '459 patent at the time of the alleged invention. For purposes of whether the teachings of the prior art render the claims of the '459 patent obvious, I have been asked to assume the date of August 21, 2009, for the analysis in this document. I have also been asked to provide my technical opinions on how concepts in the '459 patent specification relate to claim limitations of the '459 patent. In reaching the opinions provided herein, I have considered the '459 patent, its prosecution history, and the references cited in Attachment A, and have drawn as appropriate on my own education, training, research, knowledge, and personal and professional experience.

I. Qualifications

5. In formulating my opinions, I have relied on my knowledge, training, and experience in the relevant field, which I will summarize briefly. A more detailed summary of my background, education, experience, and publications is set forth in my curriculum vitae ("CV"), which is provided as INTEL-1004.

6. I have personal knowledge of the facts and opinions set forth in this declaration and believe them to be true. If called upon to do so, I would testify competently thereto. I have been warned that willful false statements and the like are punishable by fine or imprisonment, or both.

7. I am being compensated for my time at my standard consulting rate. I am also being reimbursed for expenses that I incur during the course of this work. My compensation is not contingent upon the results of my study and analysis, the substance of my opinions, or the outcome of any proceeding involving the Challenged Claims. I have no financial interest in the outcome of this matter or in any litigation involving the ’459 patent.

8. I am the Director of the School of Electrical Engineering and Computer Science at Penn State University. I am also an Evan Pugh Professor in the Department of Computer Science and Engineering and the Department of Electrical Engineering at Penn State University. I was the founding Director of the Institute of Networking and Security Research at Penn State. I have worked on telecommunications networks since 1986.

9. I received my B.E. and M.E. in Electrical Engineering from The Cooper Union for the Advancement of Science and Art in 1986 and 1987,

respectively, and my Ph.D. in Electrical Engineering from Columbia University in 1992.

10. I joined AT&T Bell Labs (which later became Bell Labs, Lucent Technologies) in 1986 after receiving my B.E. degree, and pursued my M.E. degree part-time. In my first job at Bell Labs, I tested the performance and interoperability of many data communication devices within the AT&T network. I transferred into Bell Labs Research in 1990 to pursue research full-time.

11. Starting in 1994, I performed research directed towards mobile and wireless networks. During this period, I worked extensively on signaling protocols and call processing for mobile telephony networks and mobile data applications. A large portion of my work was directed at architectures, protocols, and software for enabling different types of services on wireless networks. As part of this work I worked on efficient wireless link layer protocols.

12. In 1997, I became the Director of the Mobile Networking Research Department within Bell Labs Research. This group, which included approximately 30 researchers and support developers, carried out basic research on mobile networks including cellular telephony, mobile Internet, integrated networks and mobile data services. In 2000, I was named the Director of the Advanced Mobile Networking Department within the Wireless Business Unit of Lucent

Technologies. My role in this job was to work with development organizations to turn technology into products.

13. During both my development and research careers, I interacted extensively with computer scientists and engineers responsible for the design, development, and testing of mobile telephony and data networking products with a focus on wireless networks. As a research manager, I oversaw a department that executed many large-scale joint projects with development organizations to release products for Lucent Technologies. Examples of such joint projects include, the control software for Lucent Technologies' 3G network access controllers used for interconnecting CDMA base stations, processor overload controls in Lucent Technologies' cellular soft switches, the industry's first multi-protocol Home Location Register, servers and protocols for enabling services and interactive text messaging via cellular networks, the first systems to interwork 2G and 3G networks of different types with all-IP networks, and mobile Internet services. These interactions exposed me to a wide range of computer scientists and engineers working on wireless network technologies and applications.

14. As the Director of both the Networking Research Department in Bell Labs and the Advanced Mobile Networking Department within the Wireless Business Unit of Lucent Technologies, I met extensively with product managers

and marketing organizations for the Wireless Business Unit of Lucent Technologies and representatives of many cellular service providers. In these meetings, I would often present new concepts and product directions that the company was advancing in the wireless market.

15. I also taught as an adjunct member of the faculty at Columbia University in 1993 and from 1996-2001. I taught graduate classes in networking protocol design (1993) and mobile computing and networking (1996-2001). As such, I am familiar with the curricula taught to Electrical Engineers and Computer Scientists from the early 1990s until today.

16. I am a co-inventor on at least 39 United States Patents and 18 foreign patents, of which the large majority pertain to mobile telecommunications. Two of my patents, one of which helped enable the mobile Internet, were awarded the Thomas Alva Edison Patent Award by the Research and Development Council of New Jersey. For my early work I was recognized with an Eta Kappa Nu Outstanding Young Electrical Engineer Award and the Bell Labs Distinguished Staff Award.

17. While at Bell Labs, I led my research department into creating new network, service and software architectures for building some of the first wireless mobile data services. One example was designing a link layer protocol for more

efficient wireless transmissions. This led to two patents and two published papers. I performed several other research efforts to improve the efficiency of the use of wireless networks in different types of data systems.

18. After joining Penn State I continued my work on wireless networks and services including several that were related wireless communications. This included work on allocating resources to efficiently use wireless bandwidth in OFDM systems and resulted in several published papers.

19. Because of my expertise on security in wireless networks, I was appointed to The President's National Security Telecommunications Advisory Committee. My role on this Committee was to identify security risks for current and evolving cellular networks.

20. Based on this experience, and my continuing work at Penn State University, I have intimate knowledge of wireless and mobile networks and services. I have been highly recognized as an expert in such systems. I was recognized with the Bell Labs Distinguished Member of Technical Staff award in 1996. My award letter stated in part, "[y]our contributions to wireless call processing have profoundly impacted Lucent. You are very well-known as demonstrated by your three best paper awards…". I was named a Bell Labs Fellow in 2000, "[f]or outstanding contributions in mobile wireless networks in the area of

call processing, signaling, mobility management, and applications." I was named an IEEE Fellow in 2002 "for contributions to systems for advanced broadband, mobile data and mobile telecommunication networks."

21. I previously served as the Editor-in-Chief of IEEE Personal Communications Magazine and was the founding Editor-in-Chief of IEEE Transactions on Mobile Computing. I have published about 300 technical papers in this field.

22. My research is supported primarily by the Department of Defense and the National Science Foundation. I was the Director of a center funded by the U.S. Army Research Lab studying network science as it relates to communication networks. I also led a recently concluded project funded by the Defense Threat Reduction Agency to improve network reliability against attack by weapons of mass destruction. I am currently the Penn State Principal Investigator on an NSF/DoD funded project on 5G networks.

II. Understanding of Relevant Legal Principles

23. I am not a lawyer, and I will not provide any legal opinions. Although I am not a lawyer, I have been advised certain legal standards are to be applied by technical experts in forming opinions regarding the meaning and validity of patent claims.

24. I understand that a patent claim is invalid if it is anticipated or obvious in view of the prior art, and that a claim can be unpatentable even if all of the requirements of the claim cannot be found in a single prior-art reference. I further understand that invalidity of a claim requires that the claim be anticipated or obvious from the perspective of a person of ordinary skill in the art at the time the invention was made.

25. I have been informed that a patent claim is invalid if it would have been obvious to a person of ordinary skill in the art. In analyzing the obviousness of a claim, I understand the following factors may be taken into account: (1) the scope and content of the prior art; (2) the differences between the prior art and the claims; (3) the level of ordinary skill in the art; and (4) any so called "secondary considerations" of non-obviousness, if they are present. I am not aware of any evidence of secondary considerations of non-obviousness relevant to the '459 patent. I reserve the right to supplement this Declaration if Patent Owner ("PO") introduces evidence of secondary considerations of non-obviousness.

26. I understand that to prove that prior art or a combination of prior art renders a patent obvious, it is necessary to:

(1) identify the particular references that, singly or in combination, make the patent obvious;

(2) specifically identify which elements of the patent claim appear in each of the asserted references; and

(3) explain why a person of ordinary skill in the art would have combined the references, and how they would have done so, to create the inventions claimed in the patent. I further understand that exemplary rationales that may support a conclusion of obviousness include:

- combining prior art elements according to known methods to yield predictable results;
- simple substitution of one known element for another to obtain predictable results;
- use of known technique(s) to improve similar devices (methods or products) in the same way;
- applying a known technique to a known device (method or product) ready for improvement to yield predictable results;
- "obvious to try" – choosing from a finite number of identified, predictable solutions with a reasonable expectation of success;
- known work in one field of endeavor may prompt variations of the work for use in either the same field or a different field based on design

incentives or other market forces if the variations are predictable to a person of ordinary skill in the art; and

- some teaching, suggestion, or motivation in the prior art that would have led a person of ordinary skill in the art to modify the prior art reference or to combine prior art reference teachings to arrive at the claimed invention.

27. I have been informed that, in considering obviousness, hindsight reasoning derived from the patent-at-issue may not be used

III. '459 Patent

A. Overview of '459 Patent

28. The '459 patent is "directed toward header repetition in a communications environment." (INTEL-1001, 1:31-34.) The header of a packet (or frame) "contains important control information for the receiver to decode the payload properly, and also provides information about the packet length for virtual carrier sensing." (INTEL-1001, 1:53-56; *see also*, INTEL-1001, 1:38-45.) Therefore, "it is essential to decode the header reliably." (INTEL-1001, 1:56.)

29. To achieve this goal, the '459 patent describes four different header configurations, illustrated in Figure 1. The value of D in Figure 1 corresponds to the number of repetitions of the header and the value of H in Figure 1 corresponds

to the number of symbols required for a single header (e.g., whether the header is extended). In the first example of Figure 1 where H=1 and D=1, the packet includes a "preamble followed by a header followed by a payload." (INTEL-1001, 5:51-53.) This example represents a simple "one-part" header field.

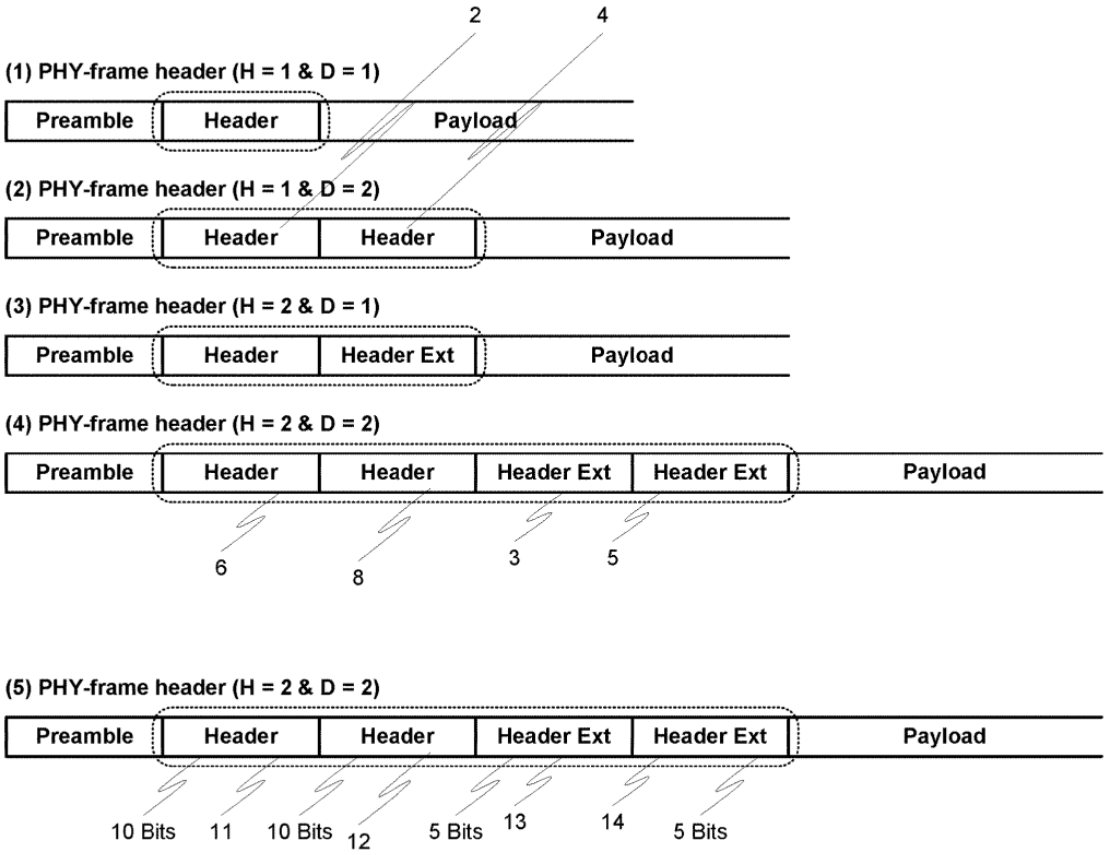

'459 Patent, Figure 1

30. The '459 patent does not use the term "header field," other than in the claims and the abstract. During prosecution, the Examiner equated the term "header field" with the configuration of the packet's header. (*See* INTEL-1002,

158.) For example, a single header is a "header field", a repeated header is a "header field", an extended header is a "header field", and a repeated and extended header is a "header field." Consistent with the Examiner's understanding, I also equate the "header field" with the configuration of the packet header.

31. In the second example where H=1 and D=2, the packet includes a preamble followed by a header that is repeated, which is followed by the payload. (INTEL-1001, 5:53-55.) This "repeated header" example includes a "two-part" header field with each part carrying the same information. (INTEL-1001, 5:55-57.)

32. In the third example where H=2 and D=1, the packet includes a preamble and a header followed by a header extension and the payload. (INTEL-1001, 5:57-59.) This "extended header" example is also a "two-part" header field but in this example the two parts carry **different** information. (*See, e.g.*, INTEL-1001, 5:65-67.)

33. And in the fourth example where H=2 and D=2, the packet includes a preamble, a header which is repeated, and a header extension which is also repeated, followed by the payload. (INTEL-1001, 5:59-62.) This "repeated, extended header" example is a "four-part" header field with the first and second parts carrying the same information and the third and fourth parts carrying the same information. (INTEL-1001, 5:62-64.)

34. In the Notice of Allowance, the Examiner pointed to the third and fourth example as the basis for allowance, finding the "prior art of record fails to disclose the first header field (i.e., Figure 1 "(3)") and the second header field (i.e., Figure 1 "(4)"). (INTEL-1002, 158.)

35. The extended and/or repeated headers of the '459 patent can be used in communications systems such as ITU G.9960 (G.hn) and IEEE 802.11 that use "frame-based (or packet-based) transmission to communication [sic] between two or more users over a shared channel based on Orthogonal Frequency Division Multiplexing (OFDM[1])." (INTEL-1001, 1:38-47; *see also*, INTEL-1001, 4:33-50.) The '459 patent acknowledges that, prior to its earliest possible priority date, G.9960 "has defined two overlapped baseband bandplans, 50MHz-PB and 100MHz-PB" and the "possibility of having narrower bandplans such as 25 MHz-PB and 12.5 MHz-PB are under discussion." (INTEL-1001, 2:17-20; *See also*, INTEL-1001, 1:56-58 (noting that G.9960 "should be familiar to those skilled in the art").) Thus, the '459 patent admits the existing ITU G.9960 standard supported two bandplans—one at least two times wider than the other.

[1] An acronym list is provided in Appendix B.

36. The generic transceiver 200 described for use in these systems includes header assembly module 220, modulation module 230, demodulation module 240, transmitter 250, encoding module 260, decoding module 270, receiver 280, and controller/processor 290. (INTEL-1001, 6:14-22; Figure 2 below.) The ’459 patent provides limited details regarding these “modules” and how they are interconnected. The ’459 patent does note that its “description omits well-known structures, operations and devices that may be shown in block diagram form or are otherwise summarized or known.” (INTEL-1001, 4:50-54.)

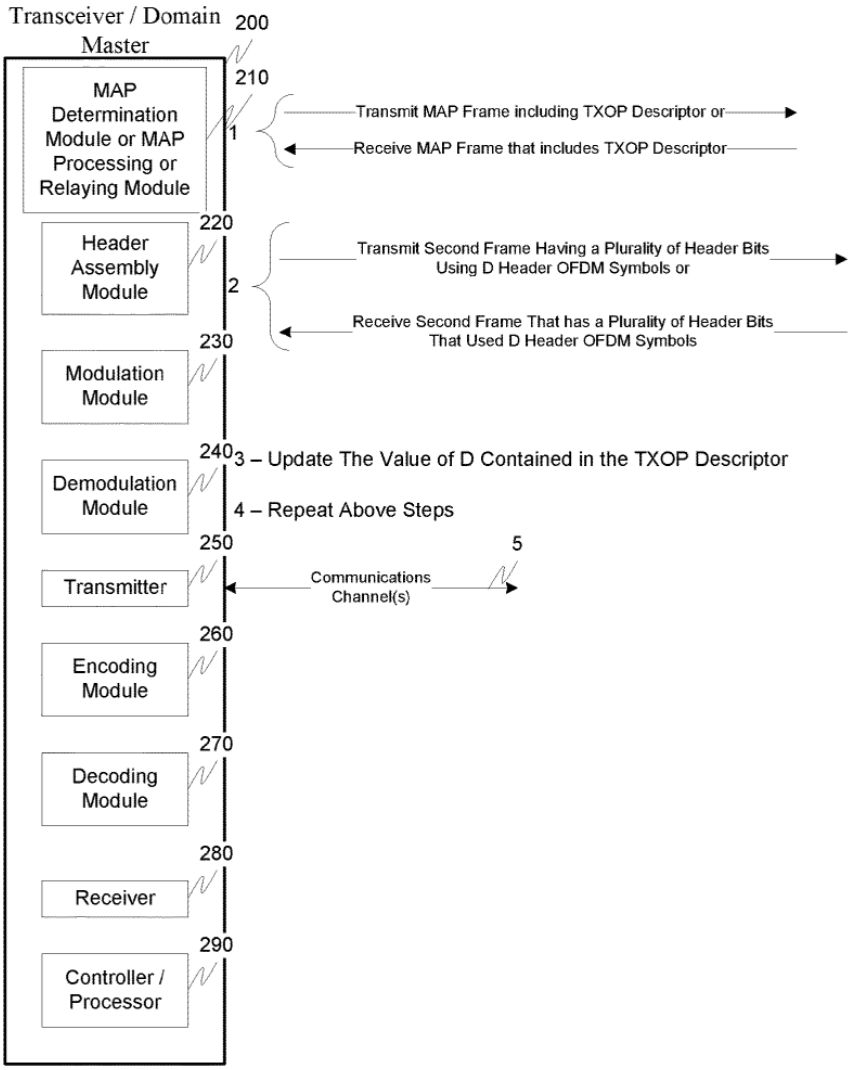

'459 patent, Figure 2

B. Technical Background

37. The concepts of repeating a header and repeating an extended header were not novel prior to the earliest possible priority date of the '459 patent. In fact, the Applicant, Applied Transform, admitted these concepts were proposed in submissions by other companies during development of the ITU-T G.hn standards

mentioned in the ’459 patent. (*See* INTEL-1009, 21-22; INTEL-1019; INTEL-1020.) I discuss the G.9960 standard and these contributions in §§III.A.3.b-c below.

38. The ITU-T G.hn standards group was not the only standards group openly discussing the concepts of repeating and extending a physical layer header prior to the earliest possible priority date of August 2009. Four years before ITU-T G.hn considered these concepts, the IEEE 802.11 TGn working group discussed similar proposals from the TGn Sync and WWiSE industry groups during development of the IEEE 802.11n standard. I discuss these further in my analysis of Ground 1.

1. Communications System Overview

39. Computing devices communicate with one another over a network via networking protocols. These protocols are generally defined in layers, with each layer being responsible for one aspect of the communications. The following figure illustrates this concept with reference to the common OSI model and the TCP/IP protocol suite. The application layer, at the top of the stack, handles details of the application. The transport layer provides the flow of data between two computers for the application layer above it. TCP and UDP are two common transport layer protocols. The network layer handles the movement of packets around the network.

IP is a common network layer protocol. The data link layer handles the details of physically interfacing with the physical media (e.g., coax, power line, air, etc). And the physical layer performs the formatting operation that transforms the information received from the upper layers into a frame (or packet) that can be communicated over the physical medium.

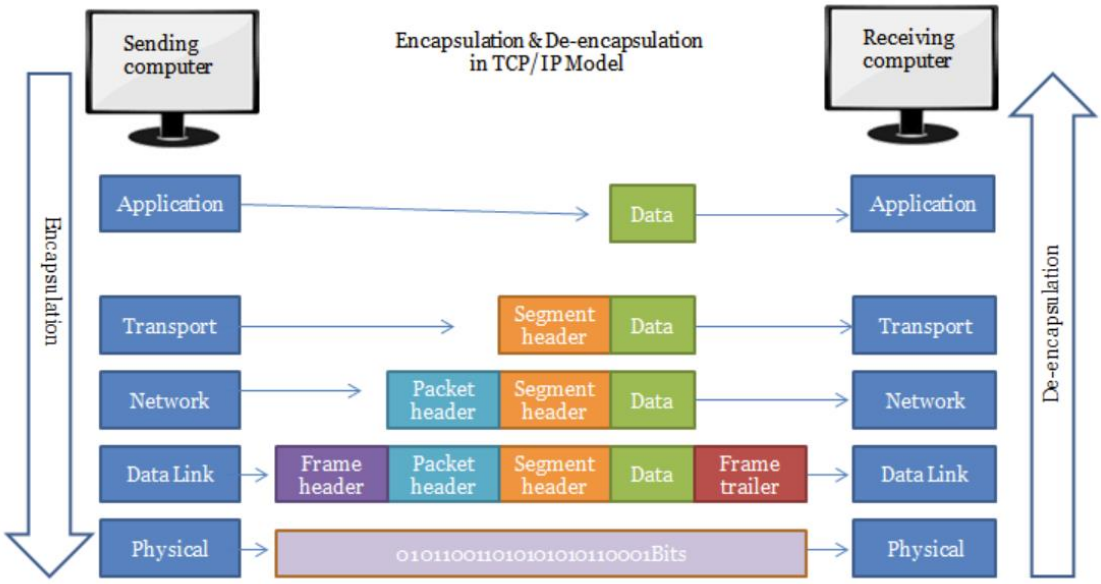

40. When an application sends data to an application running on a different computer, the data is sent down the protocol stack. Each layer adds information to the data by prepending headers and sometimes trailer information to the data that it receives, as shown in the figure above. ITU G.hn and IEEE.802.11, referenced by the ’459 patent, are focused on the two lowest layers of the protocol stack—the data link layer and the physical layer.

2. Physical Medium

41. The difference between "wired" (e.g., coax) and wireless local area networks (LANs) is the physical communication medium. Unlike wired media, wireless media "are very difficult to control because the dynamics of the propagated signals over the media are constantly changing." (O'Hara, 161.) One key consideration in the design of a wireless LAN (WLAN) system is therefore path loss. As transmitting devices transmit signals to receiving devices in an area, "the signal attenuates as a square of the distance (D)." (O'Hara, 166.) And "[a]s the receiver moves away from the transmitter, the receiver's signal power decays until it reaches the receiver's noise floor, at which time the bit error rate becomes unacceptable." (O'Hara, 166.) Additional path losses may occur because of the fading characteristics of the operating environment.

42. Fading is a major problem in WLAN system design. Most 802.11 equipment uses omnidirectional antennas, radiating RF energy in the form of electromagnetic waves and in every direction. The electromagnetic waves are obstructed, for example, by the ground, buildings, and vehicles, or other moving and stationary objects present in the vicinity of the electromagnetic waves. (*See, e.g.*, INTEL-1024, 10.) Reflections of a signal cause a delayed copy of the same transmission to be received on a different path. (*See, e.g.*, INTEL-1024, 10-11, 17-

18.) These environmental conditions contribute to fading. Large-scale fading is due to path loss of signal as a function of an object coming between the transmitter and receiver. (*See* INTEL-1024, 10.) Small scale fading is due to the constructive and destructive interference of the multiple signal paths between the transmitter and receiver. (*See* INTEL-1024, 10, 17-18.)

43. One solution to improve performance in a fading channel is to ensure that the information passes through multiple signal paths, each of which fades independently, making sure that reliable communication is possible provided one of the paths is strong. (*See* INTEL-1024, 59.) This technique is called diversity, and it can dramatically improve the performance of the system over fading channels. (*See* INTEL-1024, 59.) Three main forms of diversity are traditionally exploited in communication systems for fading channels: temporal, spectral, and spatial diversity. (*See* INTEL-1024, 59.)

44. A simple mechanism for achieving time diversity uses repetition coding. If a transmitted symbol is not repeated, a deep fade can wipe out the symbol. (*See* INTEL-1024, Figure 3.5 (top), 60-61.) However, if the information is repeated, a deep fade wipes out only one copy of the repeated information, allowing the data to be recovered. (*See* INTEL-1024, Figure 3.5 (bottom), 60-61.) Frequency diversity can similarly enhance reliability. If information is transmitted

using more than one frequency (either at the same time or at different times), it will reduce the probability that frequency selective interference that compromises fewer than all of the different frequencies that are used for transmission, will prevent successful reception. (*See* INTEL-1024, 83-84.)

Figure 3.5 The codewords are transmitted over consecutive symbols (top) and interleaved (bottom). A deep fade will wipe out the entire codeword in the former case but only one coded symbol from each codeword in the latter. In the latter case, each codeword can still be recovered from the other three unfaded symbols.

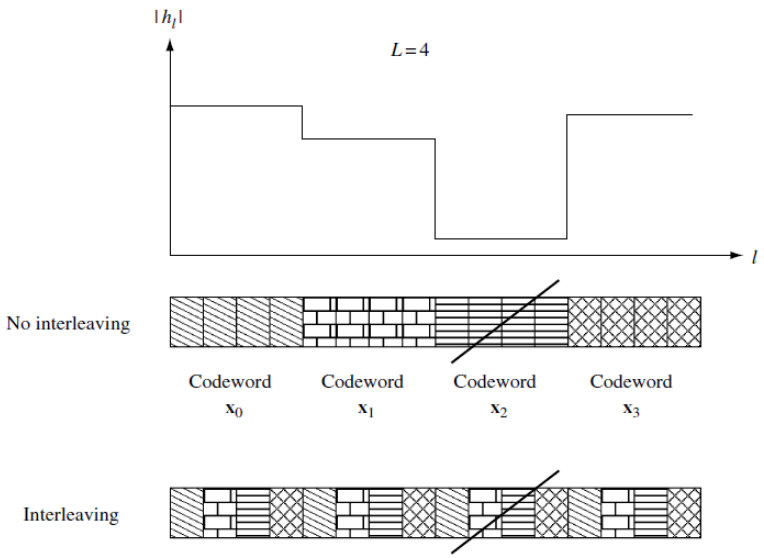

3. ITU G.hn

45. ITU-T G.hn was tasked with developing standards for a next generation home networking technology that enabled transmission of video, audio and data over existing coax, phone line and power line wires in the home. The ’459 patent is drafted using the same terminology as is found in the G.9960 standard specification.

a. G.9960

46. The goal of G.hn is to optimize a single transceiver for multiple types of media. The G.9960 specification defines the physical layers of G.hn. The ’459 patent acknowledges the January 2009 version of G.9960 as prior art in its background section. (*See*, INTEL-1001, 1:45-47, 1:56-65 (“In G.9960, which is incorporated herein by reference in its entirety, and **should be familiar to those skilled in the art**[2]”).)

47. The protocol reference model of a transceiver is illustrated in Figure 5-11 below. At the physical layer, the reference model includes (1) the physical coding sub-layer (PCS) which “encapsulates transmit packets into the PHY frame and adds PHY-related control and management overhead”, (2) the physical medium attachment (PMA) sub-layer, and (3) the physical medium dependent (PMD) sub-layer which “modulates and demodulates PHY frames for transmission over the medium using” OFDM. (INTEL-1018, 24:711-715.)

[2] Unless otherwise noted, all emphasis by bold added.

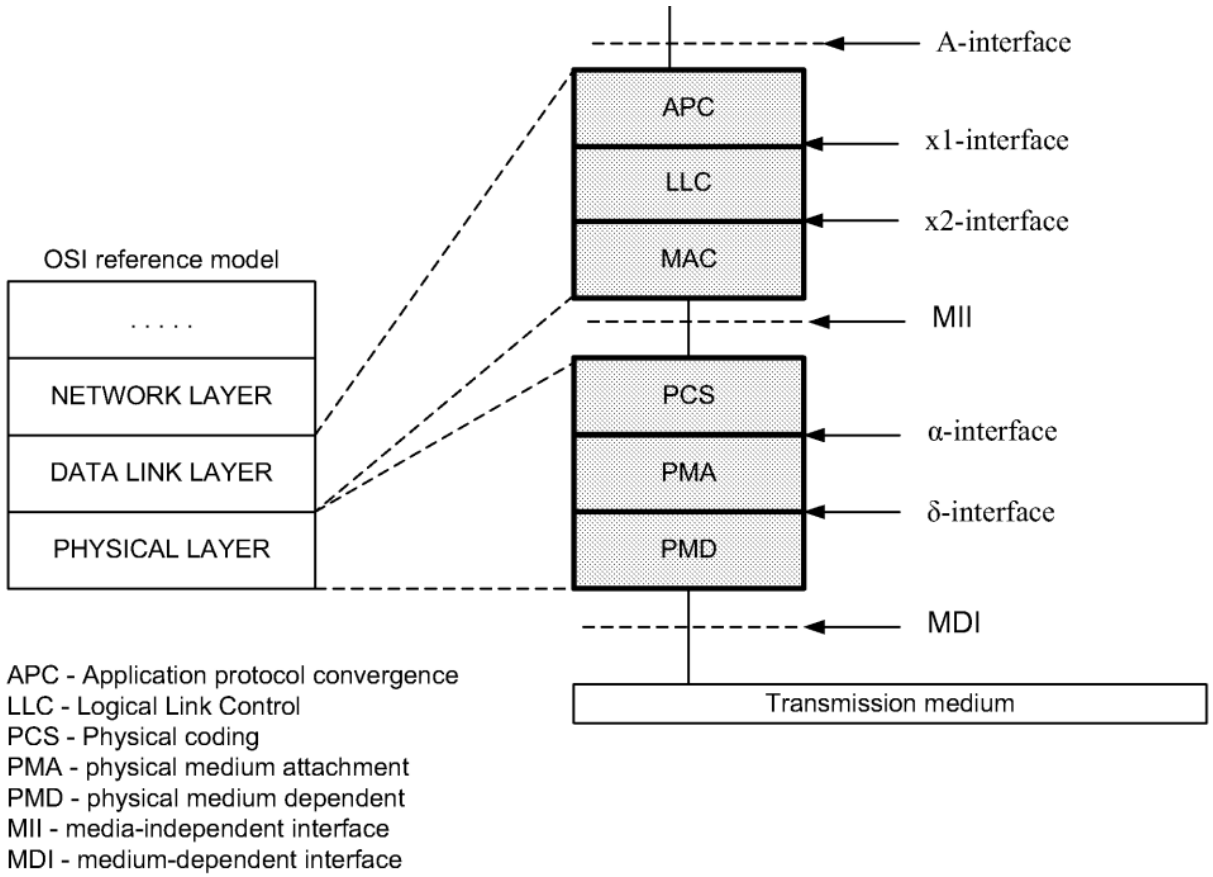

Figure 5-11/G.9960 – Protocol reference model of HN transceiver

48. In the transmit direction, data enters the PHY from the MAC as a block of data called a MAC protocol data unit (MPDU). (INTEL-1018, 30:854-855.) The incoming MPDU "is mapped into the PHY frame originated in the PCS, scrambled and encoded in the PMA, modulated in the PMD, and transmitted over the medium using OFDM modulation with relevant parameters." (INTEL-1018, 30:855-858.) In the PMD, the "preamble is added to assist synchronization and channel estimation in the receiver." (INTEL-1018, 30:858-859.)

(i) Physical Coding Sub-Layer (PCS)

49. The functional model of the PCS is shown in Figure 7-2 of G.9960, reproduced below. In the transmit direction, "the incoming MPDU is mapped into a payload field of a PHY frame" and the PHY-frame header "is added to form a TX PHY frame." (INTEL-1018, 31:869-871.) The TX PHY frame is passed over the α-interface to the PMD sublayer. (INTEL-1018, 31:879.) In the receive direction, the decoded PHY-frame payload and header are processed and the MPDU provided to the MAC layer. (INTEL-1018, 31:872-874.)

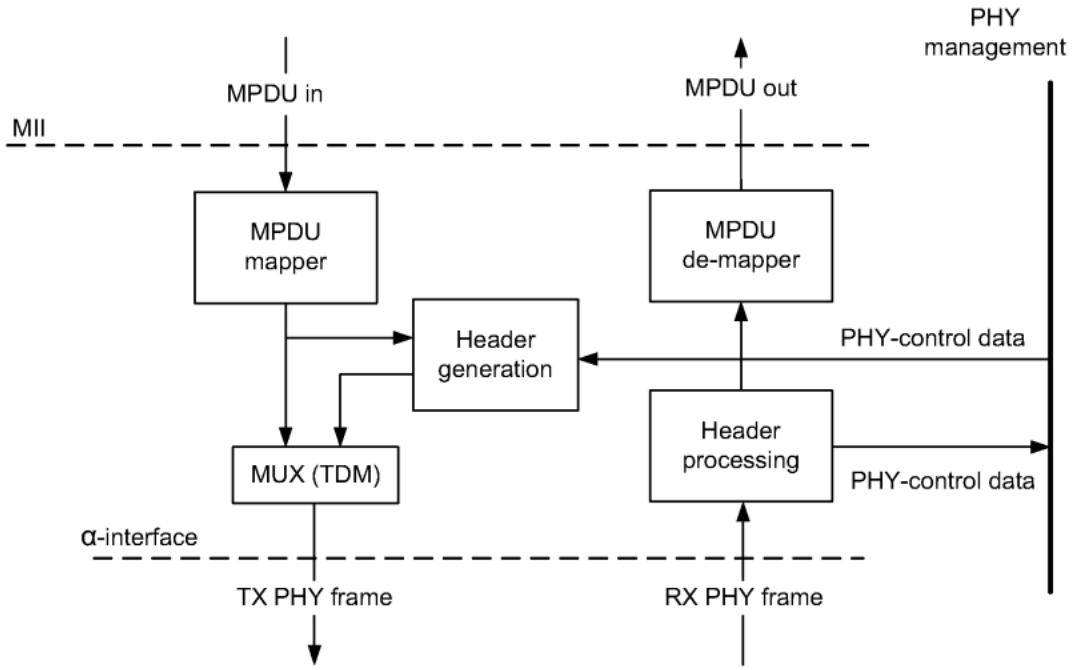

Figure 7-2/G.9960 – Functional model of PCS

50. The PHY frame (illustrated below) includes a preamble, header and payload. At the α-interface, the PHY frame includes only header and payload

because the preamble is added in the PMD. (INTEL-1018, 31:877-32:882.) The PHY-frame header is a two-part header. It is PHY_H bits long and is composed of (1) a common part (containing fields that are common for all PHY-frame types) and (2) a variable part that contains fields according to the PHY-frame type. (INTEL-1018, 32:895-897)

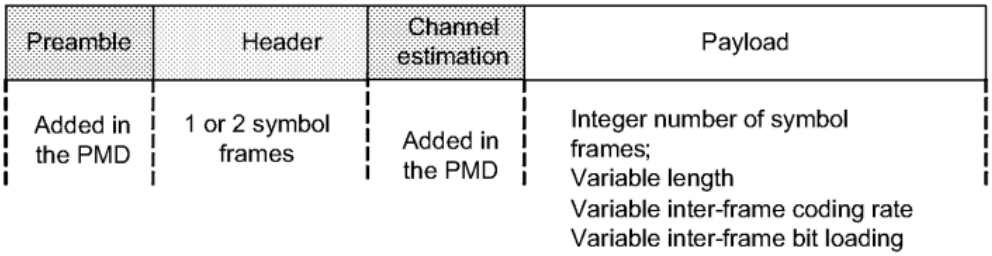

Figure 7-3/G.9960 – Format of the PHY frame

(ii) Physical Medium Attachment (PMA) Sub-Layer

51. The functional model of the PMA is illustrated in Figure 7-4 of G.9960, reproduced below. As shown, in the transmit direction, the header bits and payload bits for the incoming PHY frame (except for preamble and channel estimation symbols) are scrambled are then encoded. After encoding, the header and payload are each segmented into an integer number of symbol frames and submitted to the PMD for modulation and transmission over the medium. (INTEL-1018, 42:1101-1103.) In the receive direction, the inverse operations of decoding and de-scrambling are performed on received symbol frames.

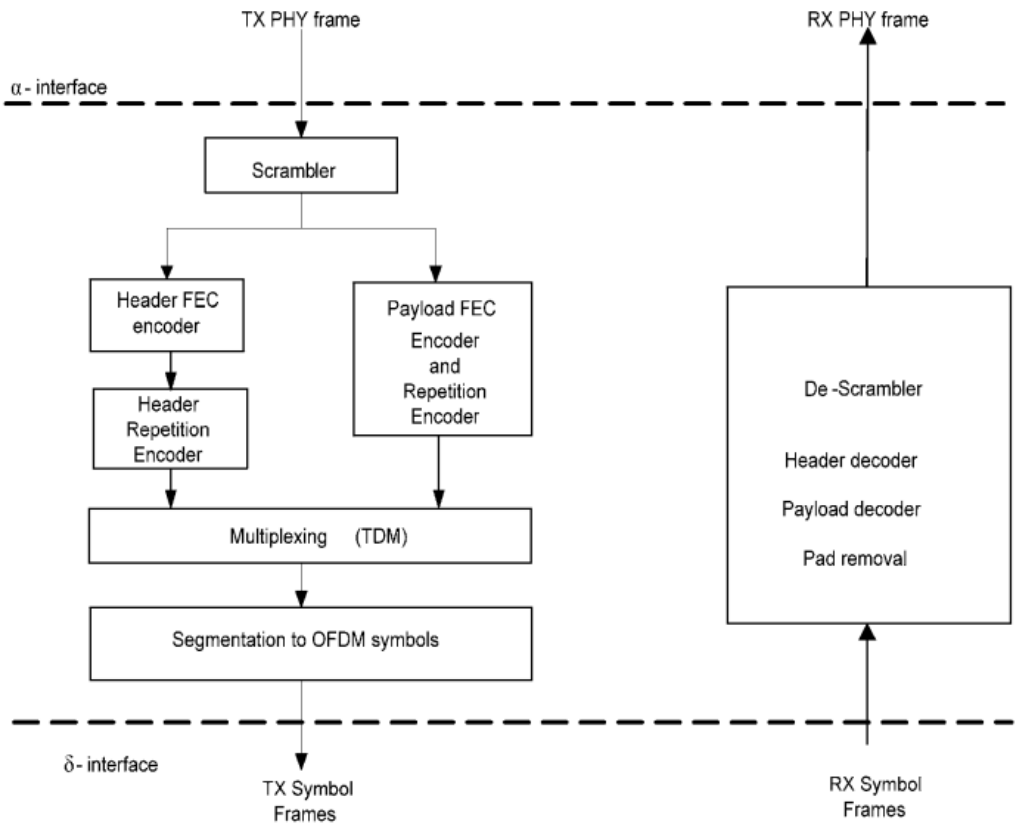

Figure 7-4/G.9960 – Functional model of PMA

(iii) Physical Medium Dependent (PMD) sub-layer

52. The functional model of the PMD is illustrated in Figure 7-11 from G.9960, reproduced below. In the transmit direction, the Tone mapper divides the incoming symbol frames into groups of bits and associates each group of bits with a specific sub-carrier onto which this group shall be loaded. (INTEL-1018, 52:1397-1399.) The constellation encoder converts every group of incoming bits "into complex numbers which are, respectively, the real and imaginary part of the constellation point on which the particular group of bits is loaded for this

subcarrier." (INTEL-1018, 52:1400-1402.) The OFDM modulator "converts the stream of the N complex numbers at its input into a stream of N time domain samples." (INTEL-1018, 53:1407-1408.) After adding the preamble, the transmit signal is up-converted to fit the required spectrum of the transmit signal. (INTEL-1018, 53:1408-1410.)

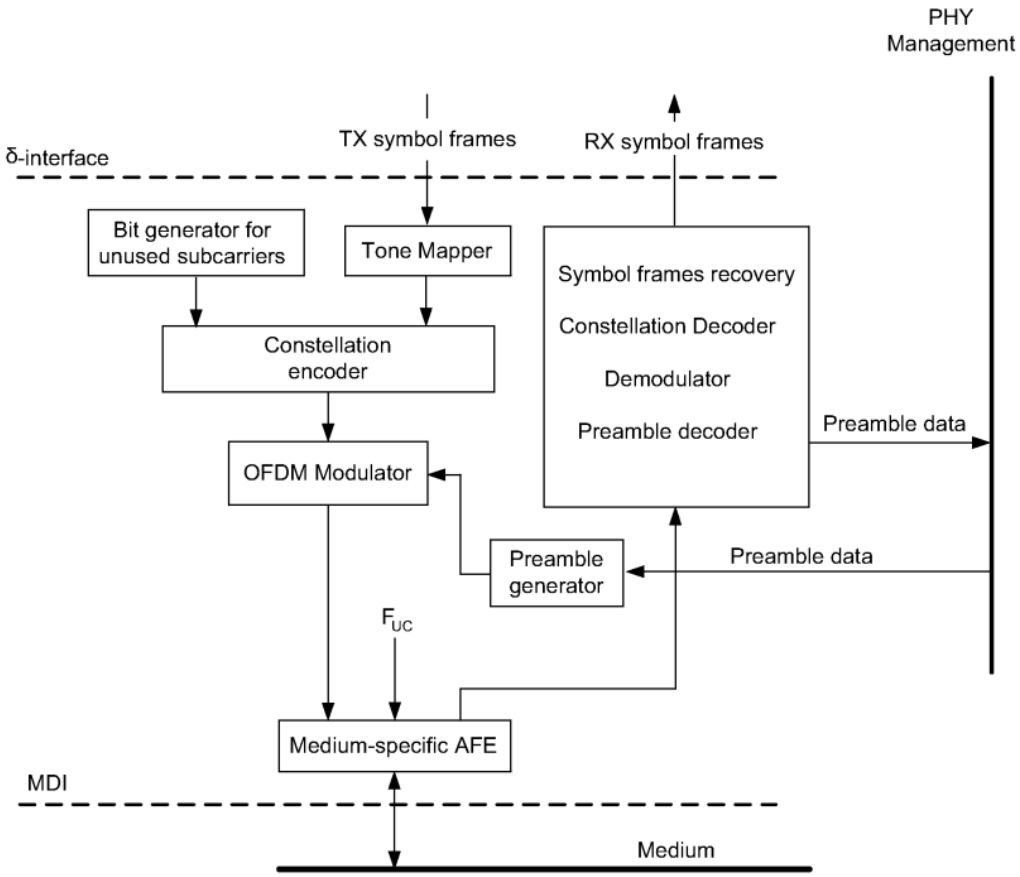

Figure 7-11/G.9960 – Functional model of the PMD

b. "G.hn: Extended PHY Frame Header" Contribution (July 2009)

53. The '459 provisional admits that the G.hn group agreed in April 2009 that "G.hn shall specify means to extend the PHY-frame header." (INTEL-1009,

2.) The contribution, "G.hn: Extended PHY frame header", from Intellon Corporation published in July 2009 proposed a technique for the header extension—"add[ing] an option for supporting extended PHY frame headers that contain 2 x PHY_H information bits." (INTEL-1019, 1.) The '459 patent further admits that this contribution is prior art in its background section. (INTEL-1001, 2:7-12.)

54. Intellon's contribution also notes that the current draft of G.9960 alludes to PHY frame headers that contain more than one symbol (although the reference does not specify whether these additional symbols are for PHY frame header symbol repetition or to support additional frame header information bits). (INTEL-1019, 1.) The contribution proposes to define two one-bit fields in the PHY header: (1) an extended header indication (EHI) which indicates whether the header contains an extended number of bits and (2) an immediate response frame extended header indication (IREHI) which tells receivers if they should respond with a header containing PHYH or 2 x PHYH bits. (INTEL-1019, 2.)

c. "G.hn: Using Two Symbols for the Header of a PHY frame on Coax" Contribution

55. The contribution, "G.hn: Using Two Symbols for the Header of a PHY frame on Coax", by CopperGate Communications in July 2009 "proposes that the number of symbols used for the header of the PHY frame on coax" be

fixed to exactly two because a single symbol does not provide adequate reliability. (INTEL-1020, 1.) The ’459 patent also admits that the CopperGate contribution was prior art. (INTEL-1001, 1:67-2:6.) And the ’459 provisional admits that this contribution was provisionally agreed to at the July 30, 2009 meeting. (INTEL-1009, 2.)

56. The CopperGate contribution notes that the PHY header “contain[s] important information necessary in order to process the payload.” (INTEL-1020, 1.) The effective number of repetitions of the header “depends on the number of active subcarriers and on the number of header symbols.” (INTEL-1020, 1.) The CopperGate proposal proposes to always use two header symbols on the coax medium. The contribution also describes a Header encoder which includes a Header FEC encoder followed by a Header repetition encoder, which copies the FEC codeword. (INTEL-1020, 2.)

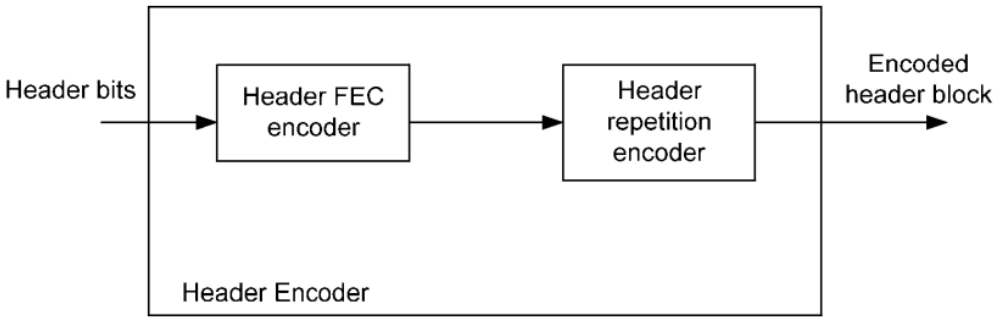

Figure 7-10/G.9960 – Functional diagram of the Header Encoder

4. IEEE 802

57. IEEE 802.11 is a member of the IEEE 802 family, illustrated partially below, which is a series of specifications for local area network (LAN) technologies. The base 802.11 specification includes two physical layer specifications: a frequency-hopping spread spectrum (FHSS) physical layer and a direct-sequence spread-spectrum (DSSS) layer. (INTEL-1031, 8.) A later revision, 802.11a, added a physical layer based on orthogonal frequency division multiplexing (OFDM). (INTEL-1031, 8.) Because the ’459 patent relates to an OFDM physical layer, I describe 802.11a further below.

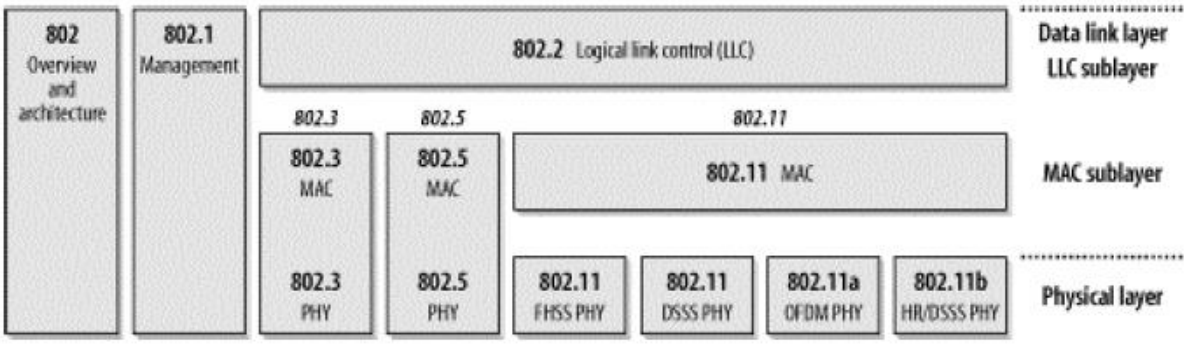

a. OFDM PHY (802.11a)

(i) Operating Channels

The OFDM PHY organizes the available spectrum “into operating channels.” (INTEL-1031, 206.) For example, the operating channels in 802.11a “are specified as 20 MHz wide.” (INTEL-1031, 206.) Each 20-MHz 802.11a channel is composed of 52 subcarriers. Four of the subcarriers are used as pilot carriers and

48 subcarriers are used to transmit data. The subcarriers are numbered from -26 to 26, as shown below. Subcarrier 0 is not used. Pilot carriers are assigned to subcarriers -21, -7, 7, and 21.

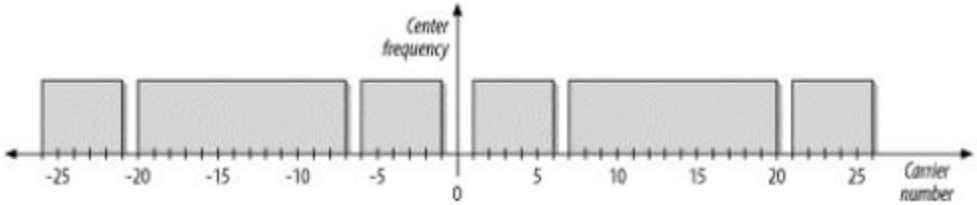

Gast, Figure 11-8

(ii) Physical Layer

58. The physical layer in 802.11 is divided into two sublayers: the Physical Layer Convergence Procedure (PLCP) sublayer and the Physical Medium Dependent (PMD) sublayer. (INTEL-1031, 151.) The PLCP is "the glue between frames of the MAC and radio transmissions in the air." (INTEL-1031, 151.) The PMD is responsible for transmitting any bits it receives from the PLCP over the air using the antenna. (INTEL-1031, 151.)

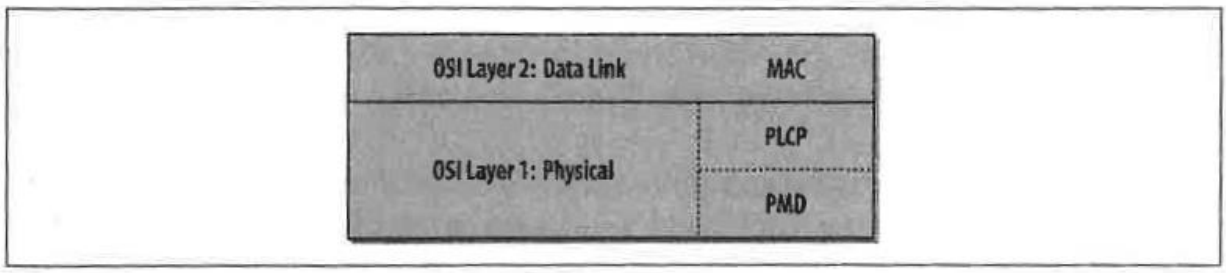

Figure 9-1. Physical layer logical architecture

59. The OFDM PHY layer creates a frame, referred to as the physical protocol data unit (PPDU), by adding a preamble and header to the data received for transmission from the MAC layer, as illustrated in Figure 122 from 802.11a standard. (INTEL-1031, 208.) The 802.11a PPDU, illustrated below, includes a preamble that "synchronizes various timers between the transmitter and the receiver." (INTEL-1031, 209.) The PLCP header is transmitted in the Signal field. (INTEL-1031, 209.) The header includes information regarding the data rate and number of bytes of the embedded MAC frame (length). (INTEL-1031, 210.)

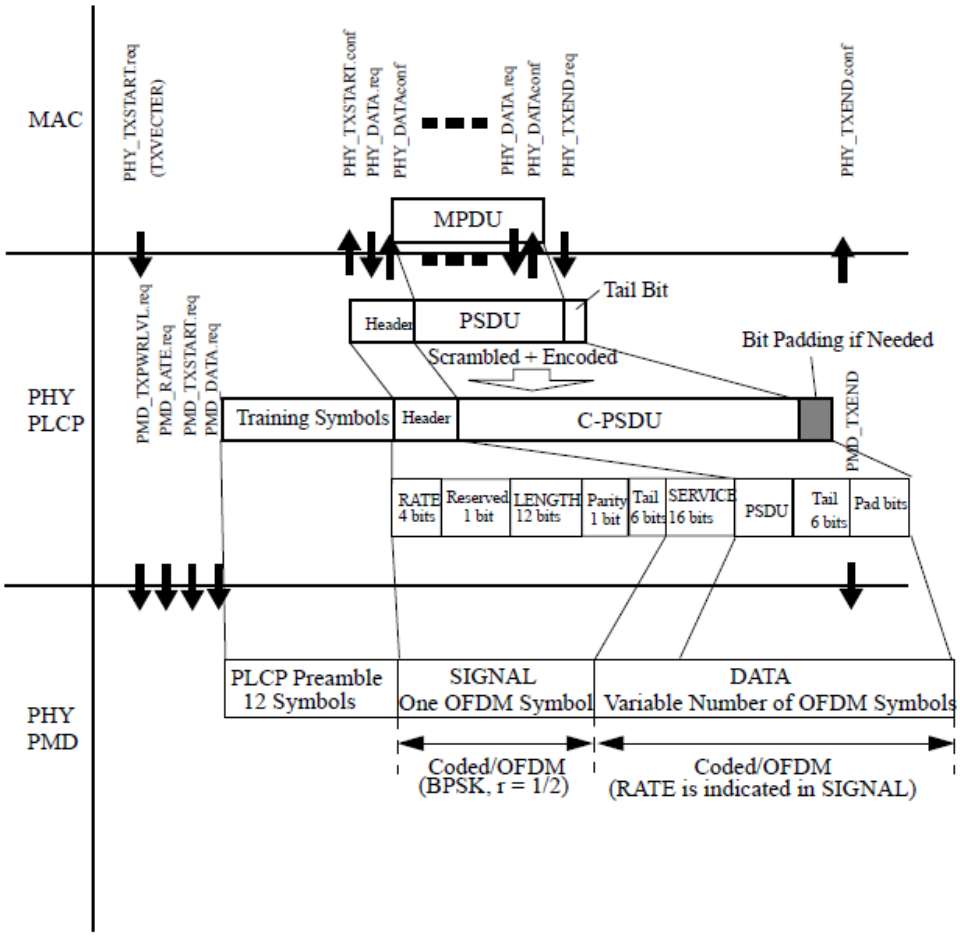

Figure 122—PLCP transmit procedure

b. IEEE 802.11n

60. In 2004, IEEE created the IEEE 802.11n task group (TGn) and charged the group with crafting a standard for WLANs that can sustain up to 100 Mbit/s throughput. This new standard, 802.11n, builds upon previous 802.11 standards, especially 802.11a. Two competing proposals emerged during the deliberations of TGn— a proposal from the World-Wide Spectrum Efficiency (WWiSE) group and a proposal from the TGn Sync group. As discussed in further

detail in §IV.A.1.a, the TGn Sync proposal included support for an extended physical layer header. The WWiSE proposal included support for an extended range mode which duplicates (repeats) the physical layer header. (*See*, §IV.A.b.)

C. Level Of Ordinary Skill In The Art

61. I understand that certain issues relating to the validity of the ’459 patent must be judged from the perspective of a person of ordinary skill in the relevant art, as I discuss below. I have been asked to define the level of a “person of ordinary skill in the art” or “POSITA” at the time the alleged invention as claimed was made. In deciding the level of ordinary skill, I have considered the following factors, which I have been informed are relevant to the determination of ordinary skill in the art.

- levels of education and experience of persons working in the field;
- types of problems encountered in the art;
- prior art solutions to these problems;
- rapidity with which innovations are made; and
- sophistication of the technology.

62. In my opinion, a person of ordinary skill in the art (“POSITA”) at the time of the purported invention would have had at least a master’s degree in electrical engineering or similar discipline, and/or two to three years of experience

working or conducting research in the field of wireless communication protocols, or an equivalent combination of education and experience.

D. Claim Construction

63. I understand that "claim construction" is the process of determining a patent claim's meaning. I understand that the Patent Office applies the same claim construction standard used in district courts which seeks to give claim terms their plain and ordinary meaning to a POSITA at the time of the claimed invention in view of the claims, specification, and prosecution history. I also understand that if the patent applicant gave a term a special meaning in the specification or during prosecution, then the special meaning should be used.

64. I do not believe that any terms require explicit construction. Therefore, I apply the plain and ordinary meaning to the recited claim terms.

IV. GROUND 1: The Combination of Hansen and July 2005 WWiSE.

A. Overview of the Combination

1. Hansen

65. U.S. Patent Publication 2006/0182017 to Hansen, et al. ("Hansen") was published on August 17, 2006, three years before the earliest possible priority date for the '459 patent. Hansen claims priority to U.S. Provisional Application No. 60/653,429, filed February 16, 2005. ("Hansen-Prov"; INTEL-1011.)

66. Hansen "relate[s] to wireless communication" and more specifically, "to a method and system for compromise greenfield preambles for 802.11n." (INTEL-1005, ¶7.) Hansen explained that IEEE 802.11 task group N (TGn) was "chartered to develop a standard to enable WLAN devices to achieve throughput rates beyond 100 Mbits/s" which will "be documented in IEEE resolution 802.11n." (INTEL-1005, ¶9.) According to Hansen, one objective of the TGn working group was "to develop a standard that will enable WLAN devices compatible with IEEE 802.11n to also interoperate with IEEE 802.11 devices that are not compatible with IEEE 802.11n" (referred to as "legacy" devices). (INTEL-1011, ¶38; *see also*, INTEL-1005, ¶32, INTEL-1005, ¶¶1, 6 (incorporating Hansen Provisional by reference).) This "backward compatible" access is referred to as "mixed mode access." (INTEL-1005, ¶32.) In mixed mode access, a physical layer frame (packet) includes "legacy" information for non-IEEE 802.11n compatible devices and 802.11n information for IEEE 802.11n compatible devices. (*See, e.g.*, INTEL-1005, ¶61 (describing training and header fields for mixed mode access).)

67. The TGn working group also recognized that IEEE 802.11n-compatible devices that communicate with other IEEE 802.11n-compatible devices in an IEEE basic service set (BSS) having no legacy devices can operate in a greenfield access mode. (INTEL-1005, ¶32.) A BSS is simply a set of stations that

communicate with one another. In greenfield access mode, the physical layer frame (packet) does not require inclusion of the "legacy" information and can therefore be shortened to omit that information, further improving throughput. (*See* INTEL-1005, ¶27.) For example, one proposed mixed mode PPDU was 24 OFDM symbols in duration with 13 symbols (54%) being data, 5 symbols (21%) comprising legacy preamble, and 6 symbols (25%) comprising the high throughput preamble. (*See* INTEL-1011, ¶55; INTEL-1005, ¶¶1, 6 (incorporating provisional by reference).) Use of a greenfield mode, enables "the removal of the 5 symbols of legacy preamble", resulting "in an approximately 21% increase in efficiency." (*Id.*)

68. Two competing proposals emerged in the TGn working group as "candidates for incorporation in IEEE 802.11n." (INTEL-1005, ¶9.) The first proposal, from the TGn Sync industry group, provided a mechanism to support mixed mode access but did "not provide a mechanism to support greenfield access." (INTEL-1005, ¶33.) The second proposal, from the Worldwide Spectrum Efficiency (WWiSE) industry group, provided mechanisms to support both greenfield and mixed mode access. (*See, e.g.*, INTEL-1006, 67:1-69:7 (depicting mixed mode and greenfield training structures).) Hansen sought to bridge the gap between these two competing proposals. (See, e.g., INTEL-1005, Title, ¶¶7, 11, 27; *see also*, INTEL-1011, ¶39.)

a. TGn Sync Proposal

69. Hansen first describes the mixed mode PPDU preamble and header from the TGn Sync proposal. (*See* INTEL-1005, ¶¶61-76.) Hansen and Hansen Provisional reference the TGn Sync proposal available in January 2005, prior to the February 2005 filing date of the Hansen Provisional. This proposal, referred to as the "TGn Sync proposal" herein is provided as INTEL-1012.

70. Hansen's Figure 4a, reproduced below, shows "exemplary training fields and header fields for mixed mode access **in accordance with a TGn Sync proposal** that may be utilized in connection with an embodiment of the invention." (INTEL-1005, ¶61.) Each preamble and header "comprise[s] a legacy short training field (L-STF) 404, a legacy long training field (L-LTF) 406, a legacy signal field (L-SIG) 408, a high throughput signal field (HT-SIG) 410, a high throughput short training field for the first spatial stream (HT-STF_1) 412, and a plurality of high throughput long training fields for the first spatial stream comprising training fields number 1 through N (HT-$LTF_{1,1}$ . . . HT-$LTF_{1,N}$) 414 . . . 416." (INTEL-1005, ¶61, *compare* INTEL-1012, 112:8-12 (Figure 47).)

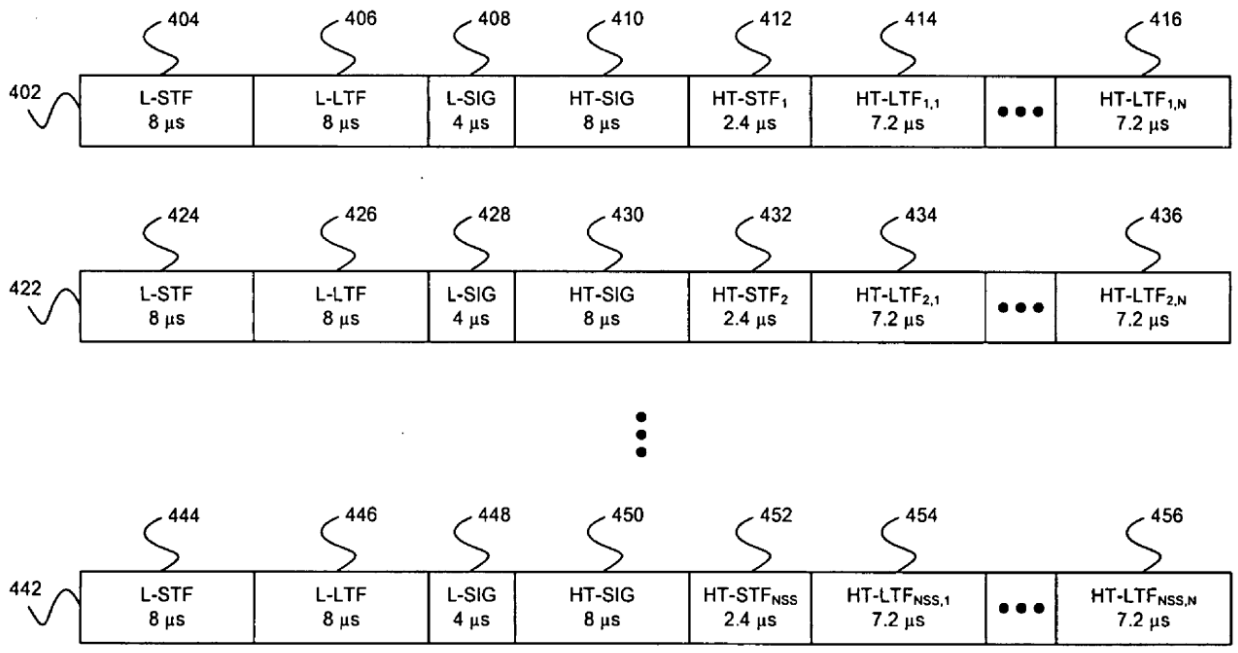

FIG. 4a

Hansen, Figure 4a

71. The exemplary "L-SIG header for mixed mode access in accordance with a TGn Sync proposal" illustrated in Figure 4b is "utilized in connection with an embodiment of the invention." (INTEL-1005, ¶66.) The L-SIG header 462 comprises "a rate field 464, a reserve field 466, a length field 468, a parity field 470, and a tail field 472." (INTEL-1005, ¶66, *compare* INTEL-1012, 131:10-13, 121:1-2 (Figure 55).)

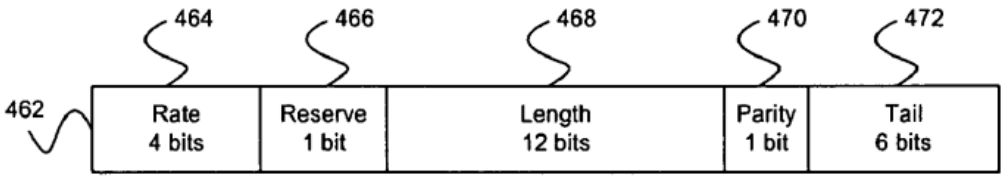

Hansen, Figure 4b

72. The HT-SIG header field "for mixed mode access **in accordance with a TGn Sync proposal**" illustrated in Figure 4c below is "utilized in connection with an embodiment of the invention." (INTEL-1005, ¶67.) The HT-SIG field comprises "a length field 478, a modulation and coding scheme (MCS) field 480, an advanced coding field 482, a reserved field 483, a sounding packet field 484, a number of HT-LTF field 486, a short guard interval (GI) field 488, an aggregation field 490, a scrambler initialization field 492, a 20 MHz or 40 MHz bandwidth (BW) field 494, a cyclical redundancy check field 496, and a tail field 498." (INTEL-1005, ¶¶67-68, *compare* INTEL-1012, 134:1-2 (Figure 62), 121:1-2 (Figure 55).)

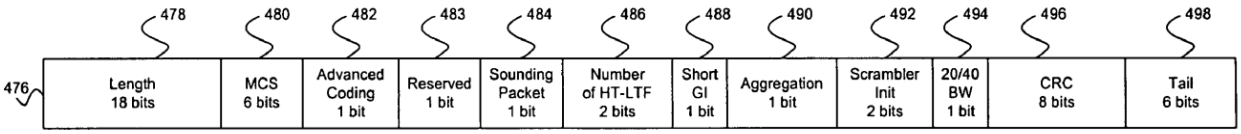

Hansen, Figure 4c

73. Hansen explains that the HT-SIG field is "approximately 8 μs in duration, or equivalent in time duration to 2 IEEE 802.11n OFDM symbols and

corresponding guard intervals." (INTEL-1005, ¶62, *compare* INTEL-1012, 133:9 ("HTSIG consists of two OFDM symbols: HTSIG1 and HTSIG2").) The TGn Sync proposal refers to the first 24 bits of the HT-SIG field (length and MCS fields) as HT-SIG1, corresponding to the first symbol (HT-SIG1 symbol). The TGn Sync proposal refers to the remaining 24 bits of the HT-SIG field as HT-SIG2, corresponding to the second symbol (HT-SIG2 symbol). This mapping of bits to HT-SIG1 and HT-SIG2 is illustrated in Figure 62 from the TGn Sync proposal, reproduced below. (INTEL-1012, 134:1-2.) For eases of discussion, I adopt the terminology of the TGn Sync proposal and refer to the 2 parts of HT-SIG as HT-SIG1 and HT-SIG2.

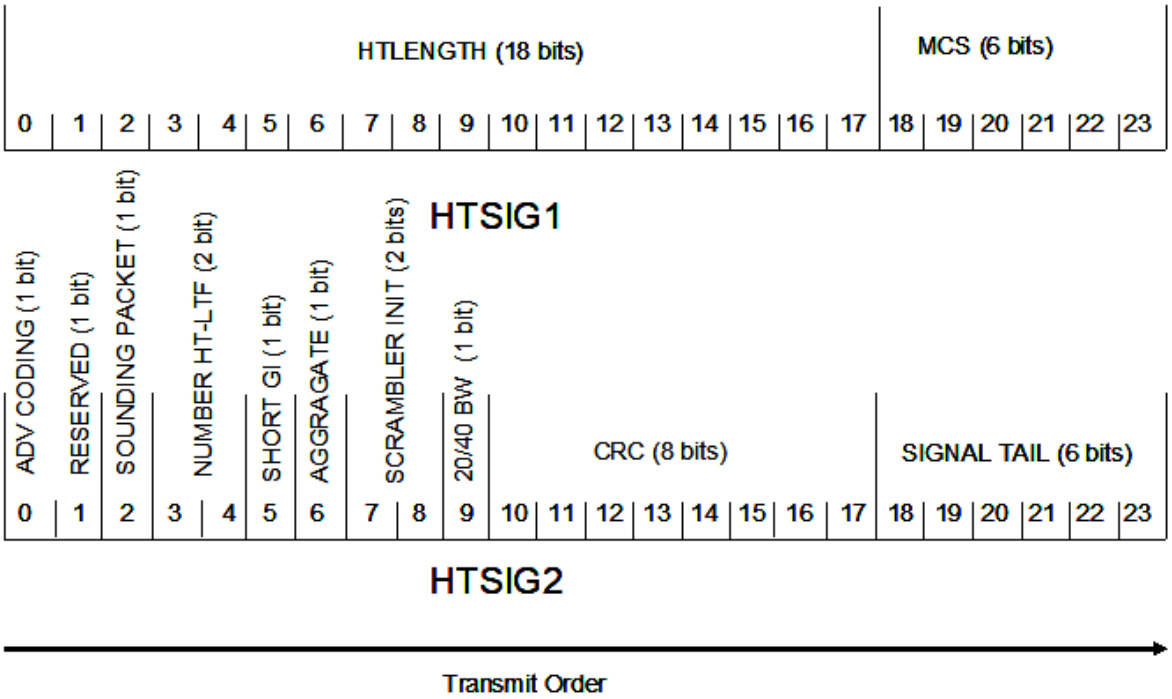

Figure 62: HT SIGNAL FIELD (HTSIG1 and HTSIG2) bit assignment

b. January 2005 WWiSE Proposal

74. Hansen next discusses training fields and header fields for greenfield access from a proposal by WWiSE. (INTEL-1005, ¶¶77-86.) Hansen and Hansen Provisional reference the WWiSE proposal available in January 2005, prior to the February 2005 filing date of the Hansen Provisional. This proposal, referred to as the "January 2005 WWiSE" herein is provided as INTEL-1013.

75. "[T]raining fields and header fields for greenfield access in accordance with a WWiSE proposal" are illustrated in Hansen's Figure 5a below. (INTEL-1005, ¶77.) The training and header fields comprise "a high throughput (HT) short training field for the first spatial stream (HT-ST_1) 504, a HT long

training field for the first spatial stream (HT-LT_1) 506, and a Signal-N field for the first spatial stream (Signal-N_1) 508." (INTEL-1005, ¶77, *compare* INTEL-1013, 50:16-18 (Figure 007).)

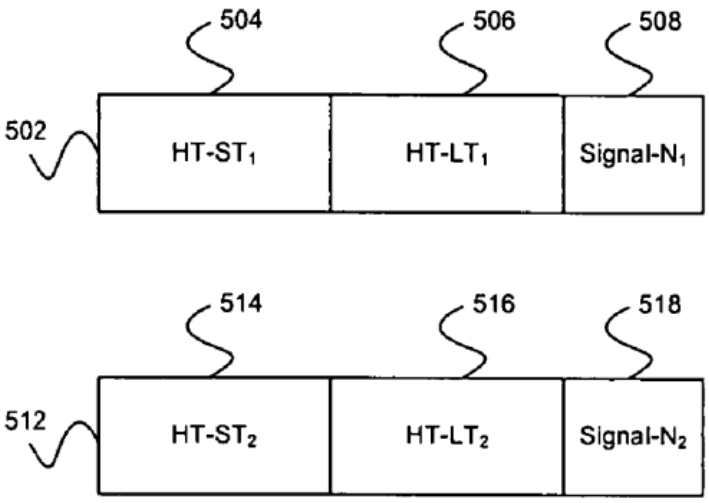

Hansen, Figure 5a

76. The "Signal-N header field for greenfield access in accordance with a WWiSE proposal" is illustrated in Figure 5b below. (INTEL-1005, ¶79.) Signal-N comprises "a reserved field 554, a number of spatial streams (N_{SS}) field 556, a number of transmit antennas (NTX) field 558, a BW field 560, a coding rate (R) field 562, an error correcting code type (CT) field 564, a constellation type (CON) field 566, a length field 568, a last PSDU indicator (LPI) field 570, a reserved field 572, a CRC field 574, and a tail field 576." (INTEL-1005, ¶79, *compare* INTEL-1013, 53:8-10.)

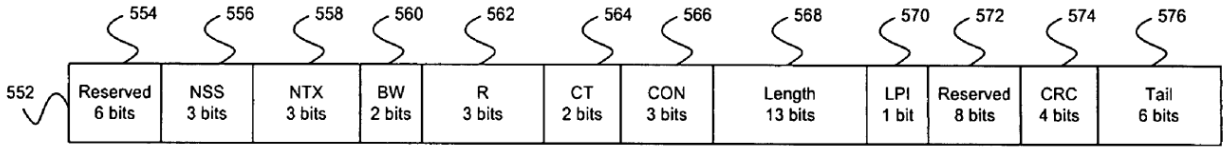

Hansen, Figure 5b

c. Hansen's "Compromise" Greenfield PPDU

77. Hansen next presents a "compromise" PPDU that combines WWiSE's concept of a greenfield PPDU with a TGn Sync-style format for the high throughput (HT)/802.11n PPDU fields. (*Compare* INTEL-1005, Figures 4a, 5a, and 6a.) By using the TGn Sync proposal's HT-SIG field, the "compromise" PPDU also includes a "sounding field", not present in the January 2005 WWiSE proposal, which "provides a channel sounding mechanism to communicate information between a transmitter and a receiver." (*See* INTEL-1005, ¶27.)

78. The training and header fields for Hansen's "compromise" greenfield PPDU are illustrated in Figure 6a below. The training and header fields "comprise a short training field HT-STF$_1$ field 604, a long training field HT-LTF$_{1,1}$ field 606, a plurality of subsequent long training fields HT-LTF$_{1,2}$ . . . HT-LTF $_{1,N}$ 608 . . . 610, and a Signal*-N$_1$ field 612." (INTEL-1005, ¶87.)

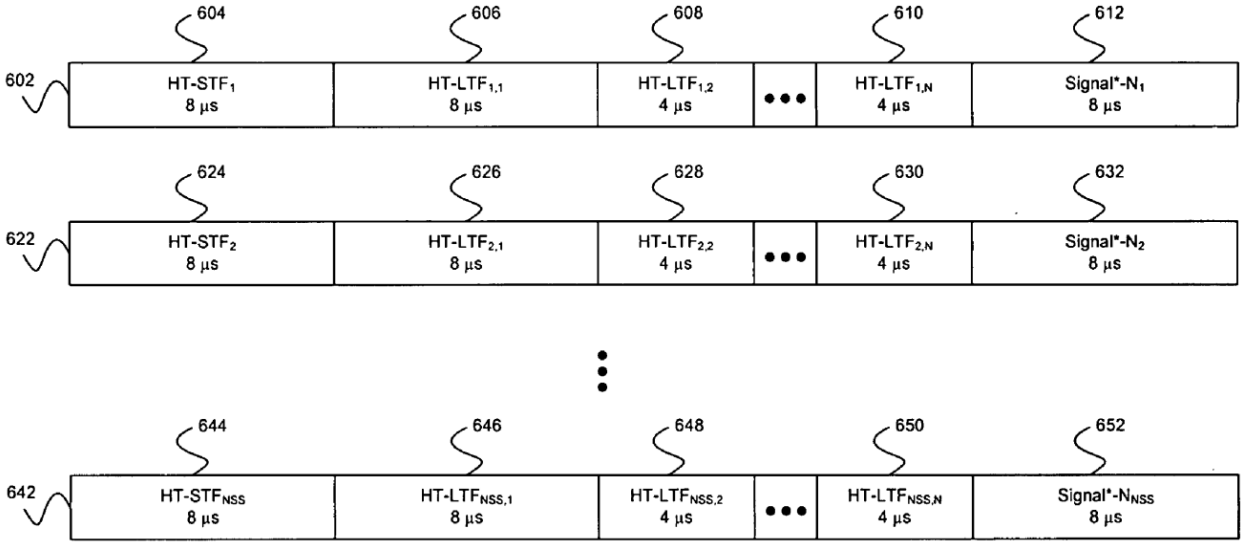

Hansen, Figure 6a

79. "In various embodiments of the invention, as illustrated in the exemplary training fields and header field in FIG. 6 a, the Signal*-N field be [sic] represented as described in FIG. 4c." (INTEL-1005, ¶97.) Figure 4c, which I discuss above, illustrates the HT-SIG header field of the TGn Sync proposal PPDU. (*See*, INTEL-1005, ¶¶67-68.) Therefore, Signal*N "comprise[s] a time duration of approximately 8 µs, and further comprise 2 OFDM symbols." (INTEL-1005, ¶97.)

2. July 2005 WWiSE

80. The WWiSE industry group submitted another version of its proposal, "WWiSE Proposal: High Throughput Extension to the 802.11 Standard", building on the January 2005 proposal discussed in Hansen. (INTEL-1006, 1.) I understand

that this proposal was submitted and made publicly available on July 9, 2005. I therefore refer to this proposal as "July 2005 WWiSE." July WWiSE 2005 describes an extended range (ER) capability for 802.11n compliant devices that was not discussed in January 2005 WWiSE. (INTEL-1006, 1, 31, 46-48, 50, 67-70.)

81. The format of a July 2005 WWiSE greenfield PPDU, illustrated in Figure 001 below, consists of a preamble, the Signal-N field (also referred to as SIG-N), and data. (INTEL-1006, 58:17-19.)

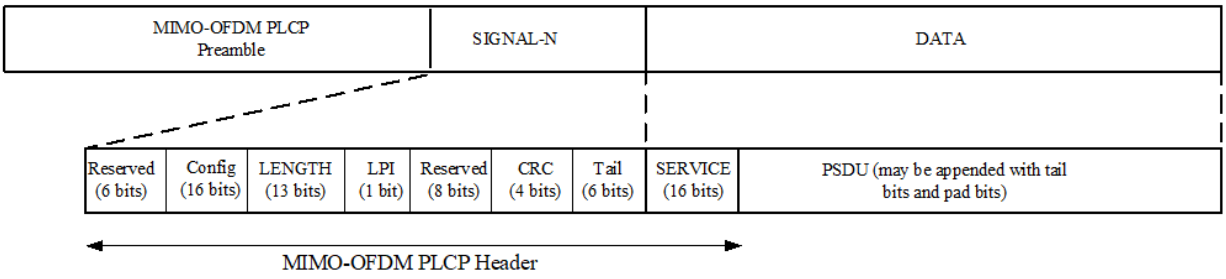

Figure 001 – PPDU frame format: Greenfield access in the 1TX (40 MHz) and 2TX (20 and 40 MHz) modes

82. July 2005 WWiSE's SIGNAL-N (SIG-N) field "is separately defined for a mandatory standard configuration and an optional 'extended communication range' configuration (ER)." (INTEL-1006, 69:10-11.) In the mandatory standard configuration (also referred to as normal range (NR)), "SIG-N is composed of a single MIMO-OFDM symbol that provides all length and configuration parameters" associated with the greenfield PPDU. (INTEL-1006, 69:13-14.)

83. In the extended range configuration (ER), "SIG-N is composed of **two consecutive MIMO-OFDM symbols**: The SIG-N MIMO-OFDM symbol is followed by a second MIMO-OFDM symbol, denoted as ER-SIG-N." (INTEL-1006, 69:16-18.) July 2005 WWiSE refers to this two-symbol SIG-N field as "the long SIG-N field format." (INTEL-1006, 50:9-10.) The second OFDM symbol (designated ER-SIG-N) in the long SIG-N field duplicates (repeats) the information carried in the SIG-N symbol, as illustrated in Figure 011 below. (INTEL-1006, 68:1-2 (referencing the "optional **duplicate** SIG-N", designated as ER-SIG-N); *see also*, Figures 007-010, 012-016 (including the "optional duplicate SIG-N for extended range communication").)

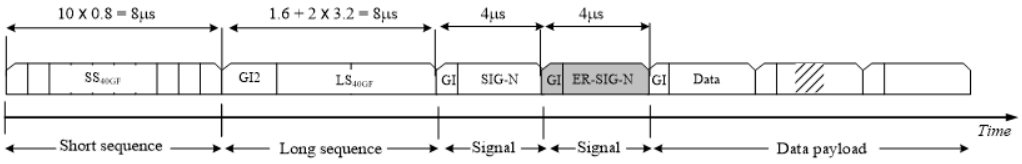

Figure 011 – MIMO-OFDM Training structure for N_{TX}=1, 40 MHz, greenfield operation. The shaded field indicates the optional duplicate SIG-N for extended range communication.

July 2005 WWiSE, Figure 011

84. Additionally, July 2005 WWiSE applies the following frequency permutation on the subcarrier indices of the OFDM data symbols composing SIG-N to derive the frequency domain OFDM symbol ER-SIG-N:

- For 20Mhz data transmissions: With SIG-N=(0, s(1), s(2) … s(28), 0, …, 0, s(-28), s(-27), …, s(-1))

ER-SIG-N is specified as ER-SIG-N=(0, s(-28), s(-27), …, s(-1), 0, …, 0, s(1), s(2) …, s(28));

- For 40Mhz data transmission: With SIG-N=(0, 0, 0, s(3), s(4) …, s(58), 0, …, 0, s(-58), s(-57), …, s(-3), 0, 0), ER-SIG-N is specified as ER-SIG-N=(0, 0, 0, s(-58), s(-57), …, s(-3), 0, …, 0, s(3), s(2) …, s(58), 0, 0).

(INTEL-1006, 69:18-25.)

85. July 2005 WWiSE further added a one-bit subfield to the SIG-N field, the REXT bit (highlighted in yellow in Table 011 below), to indicate whether the device was operating in standard configuration or ER configuration. (INTEL-1006, 69:30-31, 70:6-7.)

Table 011—SIG-N field bit assignment

Bits	Field	Subfield	Parameter	Values
B0 : b5	RSVD		Reserved bits	111111, Bits shall be ignored at the receiver
B6 : b21	CONFIG		Configuration	
B6 : b8		NSS	Number of spatial streams	000: 1, 001: 2, 010: 3, 011: 4
B9 : b11		NTX	Number of transmit antennas	000: 1, 001: 2, 010: 3, 011: 4
B12 : b13		BW	Bandwidth	00: 20 MHz, 01: 40 MHz
B14: b16		R	Code rate	000: 1/2, 001: 2/3, 010: 3/4, 011: 5/6
B17 : b18		CT	ECC type	00 : convolutional, 01 : LDPC
B19 : b21		CON	Constellation type	000: BPSK, 001: QPSK, 010: 16-QAM, 011: 64-QAM
B22 : b34	LEN		Length	Number of bytes in the payload. The value of 0 is allowed.
b35	LPI		Last PSDU indicator	1 indicates that this is the last PSDU to be aggregated into the current PPDU. LPI shall have the value of 1 when the value of the LEN field is 0.
b36	REXT		Standard or extended communication range configuration	0 indicates the standard configuration, 1 indicates the extended communication range configuration
b37 : b43	RSVD		Reserved	0000000, bits shall be ignored at the receiver
b44 : b47	CRC		Cyclic Redundancy Check	CRC calculated on bits 0-43 using generator polynomial x^4+x+1
b48 : b53	TAIL			000000

86. July 2005 WWiSE explains that "Extended Range (ER) capable devices are devices which support the optional Extended Range MCS[3] [modulation and coding scheme], in addition to the Normal Range (NR) MCS, and the long SIG-N field format." (INTEL-1006, 50:9-10.) ER frames (PPDUs) "shall be transmitted with the long SIG-N field format and the REXT bit set to value 1." (INTEL-1006, 50:12-13.) For NR frames (PPDUs), the optional repeated header

[3] July 2005 WWiSE defines the Space-Time Block Code MCS with the lowest bit rate as an ER MCS. (*See* INTEL-1006, 50:10-11.)

symbol (ER-SIG-N) is not included and the REXT bit is set to value 0. (*See* INTEL-1006, 50:12-13; 70:6-7 (value 0 of REXT "indicates the standard configuration").)

3. Motivation to Combine

87. A POSITA would have been motivated to combine the teachings of Hansen with the teachings of July 2005 WWiSE. Specifically, a POSITA would have been motivated to combine July 2005 WWiSE's ER communication teachings (described in §IV.A.2) with Hansen's "compromise" greenfield PPDU (described in §IV.A.1.c) to support both NR and ER capabilities in a single green-field compatible device. In the combination, Hansen's "compromise" greenfield PPDU is used for standard, or normal range (NR) communication. I refer to this PPDU as "the NR greenfield PPDU" herein. As discussed in §IV.A.1, the header (HT-SIG) occupies two symbols when transmitted or received, which TGn Sync refers to as HT-SIG1 and HT-SIG2. The following figure illustrates the NR greenfield PPDU for a single stream. The figure combines a single stream from Hansen's Figure 6a which illustrates only the preamble and header fields of a PPDU and combines it with Hansen's Figure 3a PPDU to show the omitted data field (indicated in red).

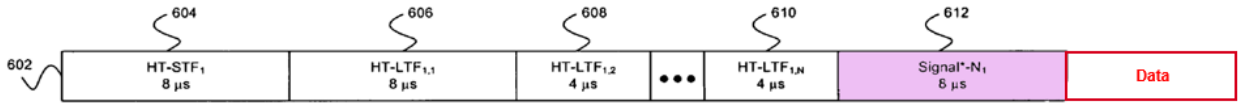

NR Greenfield PPDU
(Combined Hansen Figure 3a and Excerpt from Figure 6a)

88. ER communication in the combination of Hansen and July 2005 WWiSE repeats the Signal*-N header field of Hansen (shown in the figure above), as taught by July 2005 WWiSE. (*See, e.g.*, INTEL-1006, 69:16-18, 68:1-2 (referencing the "optional duplicate SIG-N"); *see also*, Figures 007-010, 012-016 (including the "optional duplicate SIG-N for extended range communication").) I note that Figure 6a uses a subscript to refer to Signal*-N (e.g., Signal*-N_1) because the figure depicts multiple streams. Hansen generally refers to "Signal*-N" in its discussion of Figure 6a and I use that convention throughout. (*See, e.g.*, INTEL-1005, ¶97 ("the Signal*-N field be [sic] represented").)

89. The resulting header field after repetition includes duplicates of the HT-SIG1 and HT-SIG2 parts in Hansen's Signal*-N header field and therefore occupies 4 OFDM symbols when transmitted or received. July 2005 WWiSE refers to its header field having repeated parts that are used in ER communication as the "long SIG-N" header field. (*See* INTEL-1006, 50:9-10.) I therefore refer to the header field having repeated parts used in the combination of Hansen and July

2005 WWiSE as the "Long Signal*-N" header field. For ease of discussion, I refer to the duplicated version of the header symbols HT-SIG1 and HT-SIG2 as ER-HT-SIG1 and ER-HT-SIG2 respectively. The following figure illustrates the ER greenfield PPDU for a single stream. The figure combines a single stream from Hansen's Figure 6a which illustrates only the preamble and header fields of a PPDU, substitutes the "Long Signal*-N" field for the header, and combines it with Hansen's Figure 3a PPDU to show the omitted data field. I refer to the greenfield PPDU used for ER communication in the combination of Hansen and July 2005 WWiSE as the ER greenfield PPDU.

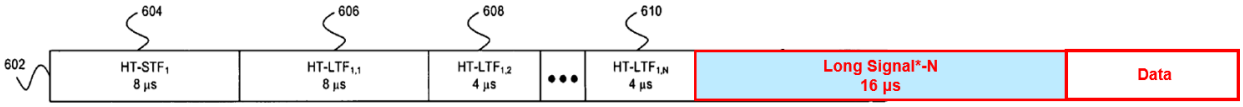

ER Greenfield PPDU
(Combined Hansen Figure 3a and Excerpt from Figure 6a, as modified by July 2005 WWiSE)

90. In the combination, the frequency permutation described in July 2005 WWiSE for the repeated header symbol is applied to the repeated version of each header symbol (ER-HT-SIG1 and ER-HT-SIG2). (*See*, INTEL-1006, 69:18-25; §IV.A.2.) Additionally, the combination uses a one-bit field (REXT) in the header field to indicate whether the device is operating in standard (NR) or ER mode. (*See* INTEL-1006, 69:30-31, 70:6-7.) A POSITA would have understood that the one-

bit reserved field of the HT-SIG2 part of Signal*-N and Long Signal*-N would be used to carry this one-bit REXT field, as I illustrate below in annotated Figure 4c. The reserved field is not utilized to carry information in Hansen's "compromise" greenfield PPDU. (*See* INTEL-1005, ¶67.) A POSITA would have therefore understood that this field was available and would be used to carry the ER information in the header field supporting ER communication in the combination of Hansen and July 2005 WWiSE.

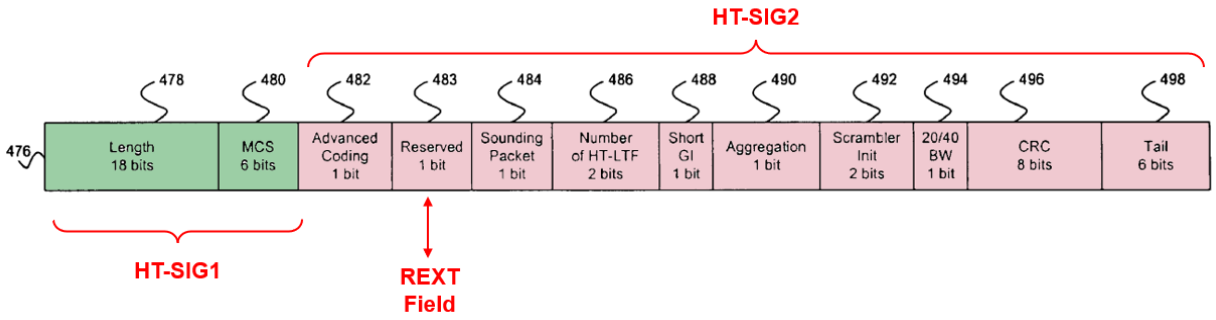

Hansen, Annotated Figure 4c

91. A POSITA would have been motivated to combine Hansen and July 2005 WWiSE as described above for numerous reasons. First, Hansen repeatedly suggests the combination. Hansen describes the earlier January 2005 WWiSE proposal and the TGn Sync proposal submitted to the IEEE.802.11 TGn working group. (INTEL-1005, ¶33.) Hansen notes however that the TGn Sync proposal did "not provide a mechanism to support greenfield access." (INTEL-1005, ¶33.) Hansen therefore defined a compromise proposal for the TGn working group based

on both the January 2005 WWiSE and TGn Sync proposals. Hansen stresses throughout its specification that its method and system are a "compromise" between these two competing proposals. (*See, e.g.*, INTEL-1005, Title ("Method and system for **compromise** greenfield preambles for 802.11n"), ¶7 ("certain embodiments of the invention relate to a method and system for **compromise** greenfield preambles for 802.11n"), ¶¶11, 27; *see also*, INTEL-1011, 14 ("Embodiments of this invention may comprise a plurality of proposals that seek to define a compromise proposal to TGn which is based on aspects of current proposals from WWiSE and TGnsync"); ¶¶1, 6 (incorporating Hansen Provisional by reference).) Based on Hansen's suggestion to bridge the gap between the WWiSE and TGn Sync industry groups, a POSITA would have been motivated to combine July 2005 WWiSE with Hansen to incorporate the newly introduced aspects of the July 2005 WWiSE proposal, including support for the ER capability, into the Hansen's greenfield PPDU. (*See, e.g.*, INTEL-1006, 1, 31, 46-48, 50, 67-70, *compare* INTEL-1013, 50:16-52:7 (Figures 007-016), 52:9-53:1.)

92. Indeed, the TGn working group and others in the field recognized the critical need to merge these two competing proposals to reach a final version of the 802.11n standard. (*See* INTEL-1021, 1 (describing competing proposals).) A March 21, 2005 article by Network World indicated that the WWiSE and TGn

Sync industry groups "might be ready to negotiate a proposal" because both "'realized that a standard has to come as quickly as possible'." (INTEL-1027, 1.) A May 2005 article by CNET noted that the TGn working group standard process "has stalled" but members of WWiSE and TGn Sync expected "a compromise will be worked out eventually." (INTEL-1028, 1.) And, the July 2005 closing report to the TGn working group documented efforts between TGn Sync and WWiSE groups to develop a joint proposal. (*See* INTEL-1029, 10-14.)

93. Second, a POSITA would have understood and would have been motivated to incorporate July 2005 WWiSE's ER capability into Hansen's greenfield PPDU to provide extended range capabilities. In fact, July 2005 WWiSE expressly suggests the benefit of including an ER capability, stating: "A characteristic of ER MCS is that they have a longer range than NR MCS." (INTEL-1006, 50:15.) ER capability allows a transmitter (e.g., an Access Point) to successfully communicate with devices that are farther away from the transmitter. (*See, e.g.*, INTEL-1030, 21-22 (discussing range extension through use of ER).) An ER capability is particularly beneficial in WLAN systems in which a potential exists for the receiver to move a significant distance from the transmitter. As the distance between transmitter and receiver increases, the communications channel is subjected to increased fading, as I discussed in §III.A.2. The ER capability of July

2005 WWiSE achieves communications at a greater distance through the introduction of diversity into its transmitted frames (PPDU). Specifically, as discussed in §IV.A.2, July 2005 WWiSE uses both temporal diversity (repeated header field) and frequency diversity (frequency permutation on duplicated version of header field) to provide ER capability. This introduction of two additional forms of diversity by a transmitter makes the header (Signal*-N) field more decodable for a given signal power, improving the receiver gain and allowing weaker signals to be received and decoded more effectively. A POSITA would have therefore been motivated to combine July 2005 WWiSE's ER capability into Hansen's system to achieve better coverage at a greater distance.

94. Third, a POSITA would have been motivated to include the capability for an ER capable device to turn on or off ER operation using the REXT bit in the header field. (*See* §IV.A.2.) For example, a POSITA would have understood that a transmitter would be motivated to transmit at the highest speed achievable based on the current conditions of a channel. Therefore, an ER capable device would start communication in NR mode and move to ER mode if channel conditions deteriorate and messages are dropped. In such circumstances, an ER-capable station can utilize ER to successfully communicate, at the cost of some throughput reduction, a tradeoff that was already familiar to a POSITA long before the earliest

possible priority date of the ’459 patent. For example, U.S. Patent Publication 2007/0015802 to Yu, et al describes this trade off relative to use of repetition coding to improve diversity. Yu notes that “since a signal to noise ratio (SNR) of 3 dB due to the repetition of the OFDM symbol and a diversity effect due to the subcarrier allocation may be achieved, the transmission speed may be reduced by half, **but a service radius may be increased to 50% to 100%**.” (INTEL-1014, ¶80.)

95. Fourth, a POSITA would have been motivated to combine Hansen and July 2005 WWiSE because the combination is merely the application of a known technique (July 2005 WWiSE’s ER capability) to a known device (device with Hansen’s “compromise” greenfield PPDU) ready for improvement and use of a known technique (July 2005 WWiSE’s ER capability) to improve similar devices (device with Hansen’s “compromise” greenfield PPDUs) in the same way (providing ER capability). The addition of ER capability to Hansen would have been seen by a POSITA as an improvement to a device using Hansen’s “compromise” greenfield PPDU because ER extends the range of reliable communication between a transmitter and receiver by providing diversity to overcome environmental conditions (e.g., fading and/or noise), as I discussed in §III.A.2. A POSITA would have applied the known improvement (ER capability

of July 2005 WWiSE) in the same way to Hansen because Hansen's "compromise" greenfield PPDU has a similar structure to the greenfield PPDU disclosed in WWiSE. (*Compare* INTEL-1005, Figure 5a *with* INTEL-1006, Figure 007.)

96. Fifth, the combination further merely combines prior art elements according to known methods. The combination of Hansen with July 2005 WWiSE provides each claimed limitation as I discuss in detail in §IV.B below. A POSITA would have combined the teachings of July 2005 WWiSE with Hansen as proposed by Petitioner by known methods. For example, as explained above, the combination repeats the header field and uses a one-bit reserved field to indicate whether ER operation is enabled. A POSITA would have known how to make these modifications to Hansen's "compromise" greenfield PPDU because the addition of fields and the use of reserved fields was commonly done to support modifications or customizations to a standard such as IEEE 802.11 long before the earliest possible priority date of the '459 patent. For example, both Hansen and July 2005 WWiSE discuss modifications to the existing 802.11a PPDU, including the addition of fields. In another example, IETF RFC 791, released in 1981, defined one byte of the IPv4 packet header to specify a packet Precedence and Type of Service. In RFC 2474 released in December 1998, the byte was repurposed to specify a Differentiated Services Point Code and indicate if there

was network congestion. In yet another example, TCP, the most popular transport protocol used in the Internet has evolved since it was first specified in RFC 793 in 1981. For example, selective acknowledgements were added in RFC 2018 issued in 1996. This required defining new values for the TCP Options field in the TCP Header. A POSITA would have also known how to integrate the frequency permutation of July 2005 WWiSE because assignment of data bits to OFDM subcarriers was a basic aspect of OFDM before the ’459 patent.

97. The results of the combination of Hansen and July 2005 WWiSE would have been predictable and a POSITA would have had a reasonable expectation of success in the combination. Both Hansen and July 2005 WWiSE describe PPDUs for use in the 802.11n standard being developed by IEEE. (*See*, *e.g.* INTEL-1005, Figure 6a; INTEL-1006, Figure 007.) Existing 802.11 standards, which both Hansen and July 2005 WWiSE build upon, would have been extremely well-known to a POSITA by the earliest possible priority date of the ’459 patent. And as discussed above, the combination adds fields to a message, uses a reserved field to signal that ER operation is enabled (the REXT bit), and performs a frequency permutation on a symbol. Because such modifications were known and in fact commonplace when dealing with evolving communications technologies, the results of such modifications would have been predictable, and a POSITA

would have been had a reasonable expectation that the combination would operate successfully.

B. Independent Claim 1

98. The ’459 patent is “directed toward header repetition in a communications environment.” (INTEL-1001, 1:35-36.) Independent claim 1 recites a “*first packet type*[4]” having a two-part header field and a “*second packet type*” having a four-part header field. Claim 1 further recites the reception of these two packet types using “*a wireless OFDM communications receiver*” and demodulation of OFDM symbols using “*a demodulator*.

Claim 1
[1P] A wireless OFDM (Orthogonal Frequency Division Multiplexing) transceiver comprising:
[1A] a wireless OFDM communications receiver operable to receive, over a wireless communication channel, a first packet type in a first channel bandwidth,
[1B] the first packet type comprising a first header field, wherein the first header field comprises two parts, a first part comprising a first set of header bits of the first header field and a second part comprising a second set of header bits of the first header field,
[1C] wherein the first set of header bits of the first header field is different than the second set of header bits of the first header field; and
[1D] a demodulator operable to demodulate a first OFDM symbol followed by a second OFDM symbol,

[4] Except in the tables, claim language is indicated herein by italics.

Claim 1
[1E] wherein the first OFDM symbol is used to receive the first part of the first header field and the second OFDM symbol is used to receive the second part of the first header field,
[1F] the wireless OFDM communications receiver further operable to receive, over the wireless communications channel, a second packet type in a second channel bandwidth,
[1G] the second packet type comprising a second header field, wherein the second header field comprises four parts, a first part comprising a first set of header bits of the second header field, a second part comprising a second set of header bits of the second header field, a third part comprising a third set of header bits of the second header field and a fourth part comprising a fourth set of header bits of the second header field,
[1H] wherein the first set of header bits of the second header field is the same as the second set of header bits of the second header field, wherein the third set of header bits of the second header field is the same as the fourth set of header bits of the second header field,
[1I] the demodulator further operable to demodulate a first OFDM symbol followed by a second OFDM symbol followed by a third OFDM symbol followed by a fourth OFDM symbol,
[1J] wherein the first OFDM symbol is used to receive the first part of the second header field, the second OFDM symbol is used to receive the second part of the second header field, the third OFDM symbol is used to receive the third part of the second header field, the fourth OFDM symbol is used to receive the fourth part of the second header field,
[1K] wherein the second set of header bits of the second header field received using the second OFDM symbol are received in a different order than the first set of header bits of the second header field received using the first OFDM symbol,
[1L] wherein the fourth set of header bits of the second header field received using the fourth OFDM symbol are received in a different order than the third set of header bits of the second header field received using the third OFDM symbol, and

Claim 1
[1M] wherein the first channel bandwidth is at least two times wider than the second channel bandwidth

1. Preamble

99. The combination of Hansen and July 2005 WWiSE discloses a "*wireless OFDM (Orthogonal Frequency Division Multiplexing) transceiver*" [1P]. Hansen discloses "**a transceiver** comprising a transmitter and a receiver in a MIMO system." (INTEL-1005, ¶15.) Hansen's transceiver is illustrated in Figure 2b which I reproduced below.

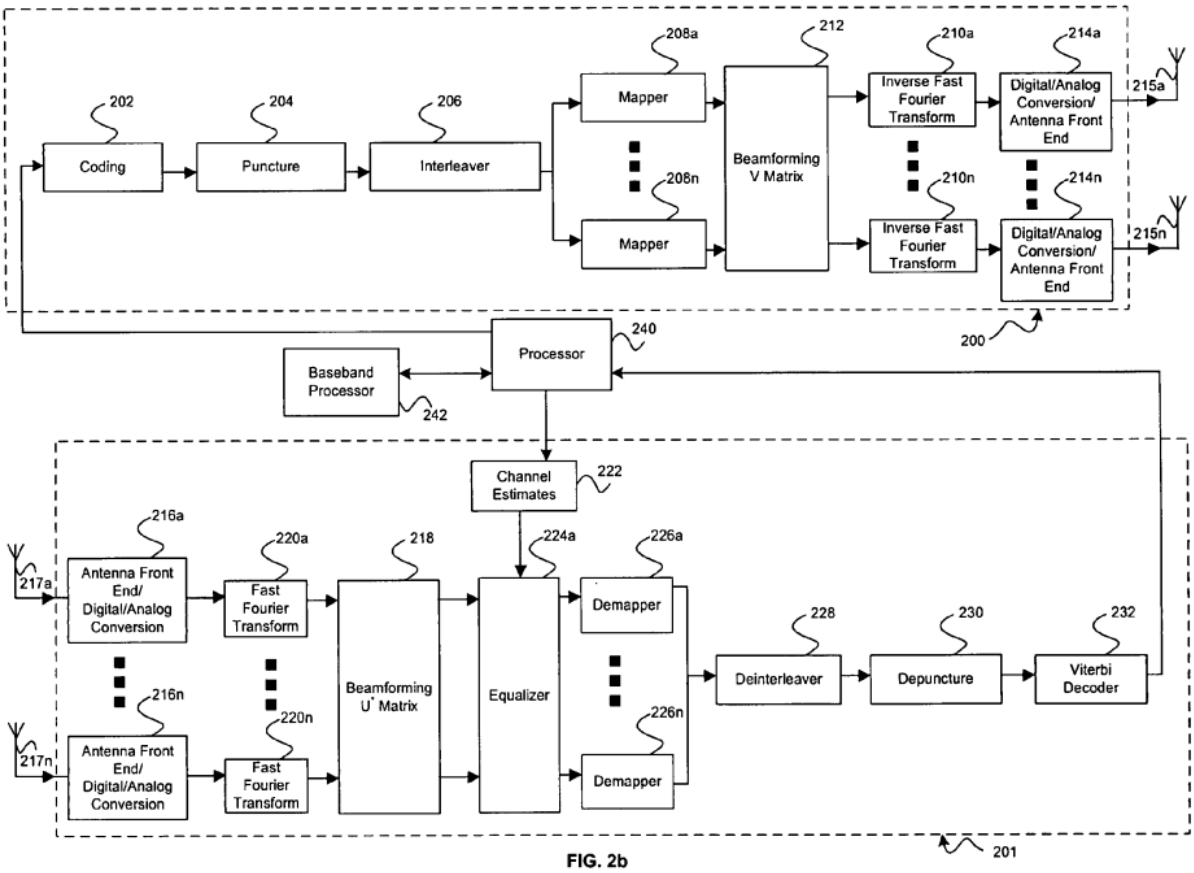

FIG. 2b

Hansen, Figure 2b

100. Hansen describes its method and system as "relat[ing] to wireless communication" and more specifically to "compromise greenfield preambles for 802.11n" which is a Wireless LAN (WLAN) standard. (*See*, INTEL-1005, ¶7.) The transceiver includes "a transmitter 200, a receiver 201, a processor 240, a baseband processor 242, a plurality of transmitter antennas 215a, . . . , 215 n, and a plurality of receiver antennas 217a, . . . , 217n." (INTEL-1005, ¶41.) The transmission portion 200 transmits RF signals and receives RF signals via an antenna. (*See*

INTEL-1005, ¶¶49-50.) Thus, Hansen's transceiver is a wireless communication transceiver.

101. In addition to other components, the transmitter portion 200 includes a "plurality of IFFT blocks 210a, …, 210n" which "may subdivide the bandwidth of the RF channel into a plurality of n sub-band frequencies to implement **orthogonal frequency division multiplexing (OFDM)**." (*See, e.g.,* INTEL-1005, ¶48 ("Each of the IFFT blocks 210a, ... , 210n may then independently sum their respective buffered and modulated signals across the frequency sub-bands to perform an n-point IFFT, thereby **generating a composite OFDM signal**").) Receiver portion 201 includes a corresponding "plurality of FFT blocks 220a, …, 220n" which demodulate received signals and mathematically integrate the demodulated signals "over one sub band frequency period by each of the plurality of FFT blocks 220a, ... , 220n to extract n symbols contained **in each of the plurality of OFDM signals** received by the receiver 201." (INTEL-1005, ¶51.) Because the transceiver generates OFDM signals and processes received OFDM signals, Hansen's transceiver is a "*wireless OFDM (Orthogonal Frequency Division Multiplexing) transceiver*" [1P].

2. "*Wireless OFDM Receiver*" Limitations

102. Claim 1 recites the following set of limitations directed to "*a wireless OFDM communications receiver*." The combination of Hansen and July 2005 WWiSE discloses these limitations as I discuss further below.

> **[1A]** *a wireless OFDM communications receiver operable to receive, over a wireless communication channel, a first packet type in a first channel bandwidth,*
>
> **[1F]** *the wireless OFDM communications receiver further operable to receive, over the wireless communications channel, a second packet type in a second channel bandwidth,*

a. First and Second Packet Types

103. Hansen's Figure 3a, reproduced below, "illustrates an exemplary physical layer protocol data unit [PPDU], which may be utilized in connection with an embodiment of the invention." (INTEL-1005, ¶59.) The PPDU includes "a physical layer convergence protocol (PLCP) preamble field 302, a PLCP header field 304, and a data field 306." (INTEL-1005, ¶59.) The preamble field 302 of a PPDU is "utilized by a receiver 201 in connection with the reception of signals via an RF channel." (INTEL-1005, ¶59.) The header field 304 includes "information that is utilized by a receiver 201 in connection with the processing of information in the data field 306." (INTEL-1005, ¶59.) The data field 306 includes

"information that is transmitted by a transmitter 200 and received by a receiver 201." (INTEL-1005, ¶59.) The data field 306 of a PPDU is sometimes referred to as a "payload." (*See, e.g.*, INTEL-1006, 67:1-69:3 (Figures 007-015, referring to the "Data payload" following the preamble and header fields), 70:6-7 (Length field of SIG-N header indicating "Number of bytes in the payload").)

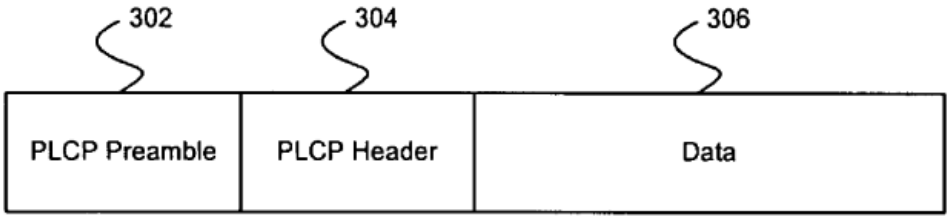

Hansen, Figure 3a

104. July 2005 WWiSE similarly describes a PPDU as having a preamble, header, and data. (INTEL-1006, 58:17-60:4.) I note that July 2005 WWiSE also refers to the data portion of the PPDU as a PHY sublayer service data unit (PSDU). (*See, e.g.*, INTEL-1006, 5:8.) 802.11a, which forms the basis of both the July 2005 WWiSE and TGn Sync proposals, also describes a PPDU as having the basic format of preamble, header, and data. (*See*, INTEL-1015, 7.) A PPDU is typically referred to as a "frame." (*See, e.g.*, INTEL-1006, 58:15-17 ("PLCP frame format"); INTEL-1015, 7 ("PLCP frame format").)

105. The ’459 patent refers to the structure having a preamble, header, and payload as a packet: “A packet is usually formed by a preamble, header, and payload.” (INTEL-1001, 1:43-45.) Therefore, consistent with this usage in the ’459 patent, a PPDU, such as disclosed in Hansen’s Figure 3a, is a “*packet*.”

106. As I discussed in §IV.A.3, the combination of Hansen and July 2005 WWiSE includes two different types of PPDUs: a NR greenfield PPDU and an ER greenfield PPDU. The NR greenfield PPDU, reproduced below top, is used for standard or normal range communication in greenfield mode and is “*a first packet type*.” The ER greenfield PPDU, reproduced below bottom, is used for extended range (ER) communication and is “*a second packet type*.”

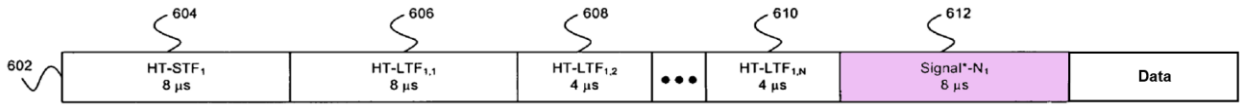

NR Greenfield PPDU (“*First Packet Type*”)
(Combined Hansen Figure 3a and Excerpt from Figure 6a)

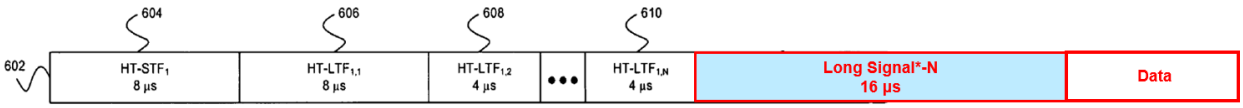

ER Greenfield PPDU (“*Second Packet Type*”)
(Combined Hansen Figure 3a and Excerpt from Figure 6a,
as modified by July 2005 WWiSE)

b. "*Wireless OFDM Receiver*"

107. The receiver portion 201 of Hansen's transceiver, illustrated in annotated Figure 2b below, includes antenna front end and analog to digital conversion blocks 216a-n (shaded red). I note that Figure 4b appears to have a typographical error. It labels block 216 "antenna front end/digital/analog conversion." Based on the specification (¶50) and general knowledge in the art, a POSITA would have understood this block includes analog/digital conversion not digital/analog conversion. I therefore refer to each of these blocks as "AFE/ADC blocks."

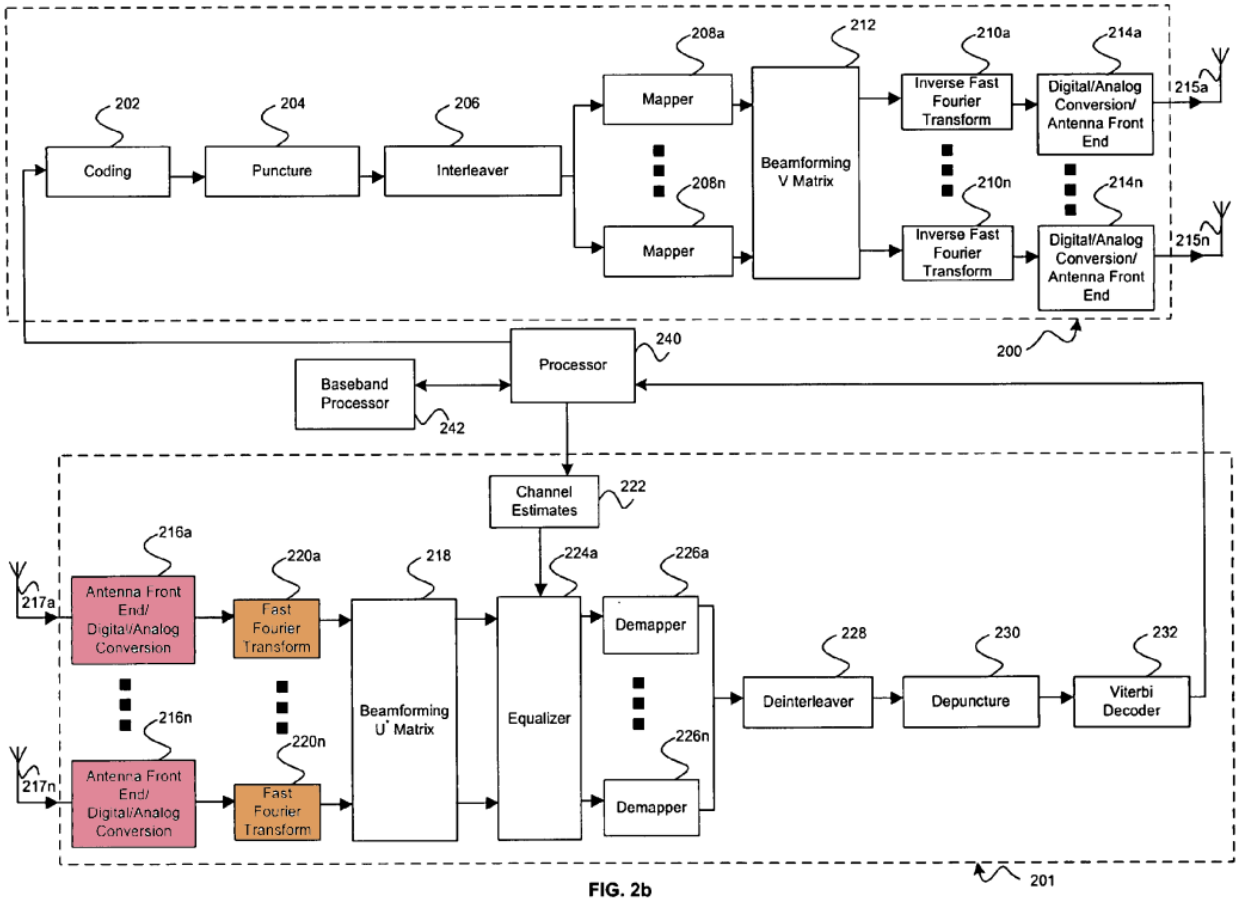

FIG. 2b

Hansen, Annotated Figure 2b

108. Each AFE/ADC block 216 receives analog RF signals via an antenna, converts the RF signal to baseband and generates a digital equivalent of the received analog baseband signal. (INTEL-1005, ¶50.) The number of AFE/ADC blocks 216 equals "the number of receiving antenna 117a, …, 117n at the receiver." (INTEL-1005, ¶50.) A single antenna system would include only a single AFE/ADC block 216. Such a single antenna system is discussed in 802.11a. (*See*, *e.g.*, INTEL-1015, 24 (Figure 118, illustrating a receiver portion having one

set of components before the FFT that handle receiving the RF signal, converting to baseband, and generating the digital equivalent).)

109. The one or more AFE/ADC blocks 216 used to receive the RF signals associated with an incoming "*packet*" are collectively the "*OFDM receiver*" for that incoming "*packet*." I note that Hansen uses a similar naming convention, referring to a single RF front end 280 in Figure 2a. (*See*, INTEL-1005, ¶39.) Thus, the combination of Hansen and July 2005 WWiSE discloses "*a wireless OFDM communications receiver operable to receive*" PPDUs, including the NR greenfield PPDU ("*first packet type*") and the ER greenfield PPDU ("*second packet type*"). (*See* §IV.B ("*OFDM transceiver*").)

110. Hansen's AFE/ADC blocks 216 utilize an antenna to receive RF signals over an RF channel. (INTEL-1005, ¶¶50, 59 ("in connection with the reception of signals via an RF channel"), 56 (referring to "data received via the RF channel"); *see also*, INTEL-1005, ¶31 (describing wireless communication "via an RF channel" by the system), ¶15 (referring to the system of Figure 2b as a "transceiver").) The systems of both Hansen and July 2005 WWiSE support channels having a bandwidth of 20 MHz and 40 MHz. (*See* INTEL-1005, ¶¶34-35; INTEL-1006, 70:6-7 (Bandwidth parameter indicating either 20 MHz or 40 MHz).) Therefore, the 20 MHz or 40 MHz **bandwidth** (BW) field 494 included in

the Signal*-N field of the NR greenfield PPDU and in the Long Signal*-N field of the ER greenfield PPDU "indicate[s] whether the PPDU was transmitted using a **20 MHz RF channel**, or a **40 MHz RF channel**." (INTEL-1005, ¶68; *see also*, INTEL-1005, ¶¶67, 87, 97; §§IV.B.2.a-b.) Transmission over a 20 MHz or 40 MHz channel corresponds to reception over a 20 MHz or 40 MHz channel respectively.

111. The combination of Hansen and July 2005 WWiSE therefore discloses "*a wireless OFDM communications receiver operable to receive, over a wireless communication channel, a first packet type* [NR greenfield PPDU] *in a first channel bandwidth* [e.g., 40 MHz channel]" [1A] and "*the wireless OFDM communications receiver further operable to receive, over the wireless communications channel, a second packet type* [ER greenfield PPDU] *in a second channel bandwidth* [e.g., 20 MHz channel]" [1F]. Indeed, a POSITA would have understood that transmitting or receiving an ER greenfield PPDU in a 20 MHz channel instead of a 40 MHz channel would provide double the power spectral density, providing better range for the ER communication.

112. The combination of Hansen and July 2005 WWiSE discloses that the same device is operable to receive both the "*first packet type*" [NR greenfield PPDU] and the "*second packet type*" [ER greenfield PPDU]. July 2005 WWiSE

specifies that ER "capable devices are devices which support the optional Extended Range MCS, **in addition** to the Normal Range (NR) MCS, and the long SIG-N field format." (INTEL-1006, 50:9-10.) The REXT bit in the Signal*-N field in the combination of Hansen and July 2005 WWiSE indicates whether an ER capable device is operating in ER or NR mode. (*See, e.g.*, INTEL-1006, 69:29-31, 70:6-7, 50:9-1.) For example, in July 2005 WWiSE "ER frames shall be transmitted with the long SIG-N field format and the REXT bit set to value 1." (INTEL-1006, 50:12-13.) NR frames are sent with the SIG-N field format and the REXT bit set to value 0. An ER capable device therefore receives both ER and NR PPDUs. Thus, the combination of Hansen and July 2005 WWiSE discloses that a "*transceiver*" (ER capable device) is operable to receive both the "*first packet type*" (NR greenfield PPDU) and the "*second packet type*" (ER greenfield PPDU).

3. "*Packet Type*" Limitations

113. Claim 1 includes a set of limitations, reproduced below, directed to a "*first packet type*" and a "*second packet type*." As I set forth below, the combination of Hansen and July 2005 WWiSE discloses these "*packet type*" limitations.

> **[1B]** *the first packet type comprising a first header field, wherein the first header field comprises two parts, a first part comprising a first*

set of header bits of the first header field and a second part comprising a second set of header bits of the first header field,

[1C] *wherein the first set of header bits of the first header field is different than the second set of header bits of the first header field; and*

[1G] *the second packet type comprising a second header field, wherein the second header field comprises four parts, a first part comprising a first set of header bits of the second header field, a second part comprising a second set of header bits of the second header field, a third part comprising a third set of header bits of the second header field and a fourth part comprising a fourth set of header bits of the second header field,*

[1H] *wherein the first set of header bits of the second header field is the same as the second set of header bits of the second header field, wherein the third set of header bits of the second header field is the same as the fourth set of header bits of the second header field,*

a. "*First Packet Type*"

(i) Content

114. The combination of Hansen and July 2005 WWiSE discloses a "*first packet type comprising a first header field, wherein the first header field comprises two parts, a first part comprising a first set of header bits of the first header field and a second part comprising a second set of header bits of the first header field*" [1B].

115. Hansen's Figure 6a, illustrated below, "shows exemplary training fields and header fields with trailing signal field for greenfield access." (INTEL-1005, ¶87.) Because Hansen supports multiple input, multiple output (MIMO), Hansen's Figure 6a depicts the PPDU preamble and header fields sent on multiple spatial streams. For single input, single output transmissions on a single antenna, only one row exists. As was known in the art and described in both July 2005 WWiSE and the TGn Sync proposal, the header field is either transmitted from one antenna (INTEL-1012, 121:1-2, 24-27) or an identical header field (Signal*-N) is transmitted by each antenna, even for MIMO operations. (INTEL-1006, 70:18-20 ("The SIG-N MIMO-OFDM symbol is transmitted simultaneously from all TX antennas in all modes"); INTEL-1012, 121:24-122:2.) Therefore, for ease of discussion, I discuss the header field in the combination of Hansen and July 2005 WWiSE in the context of a single spatial stream.

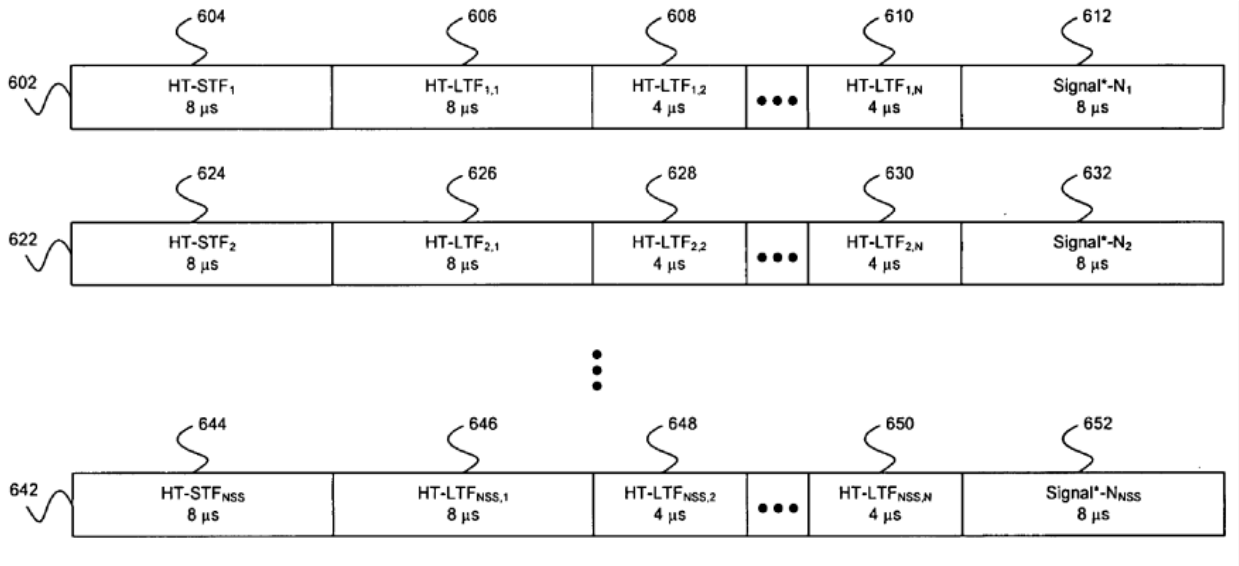

Hansen, Figure 6a

116. The following excerpt from Hansen's Figure 6a (below top) illustrates the PPDU training fields and header 602 for a single antenna. The training fields and header field include short training field (HT-STF$_1$) 604, long training field (HT-LTF$_{1,1}$) 606, a plurality of subsequent long training fields (HT-LTF$_{1,2}$ . . . HT-LTF $_{1,N}$) 608 . . . 610, and a Signal*-N$_1$ field 612. (INTEL-1005, ¶87.) In Hansen's greenfield PPDU of Figure 6a, the Signal*-N 612 is "represented as described in Fig. 4c" which is the TGn Sync proposal's HT-SIG field. (*See* INTEL-1005, ¶97 ("In various embodiments of the invention, as illustrated in the exemplary training fields and header field in FIG. 6 a, the Signal*-N field be [sic] represented as described in FIG. 4 c"), ¶67 ("FIG. 4 c shows an exemplary HT-SIG header field … **in accordance with a TGn Sync proposal** that may be utilized in connection

with an embodiment of the invention”).) Hansen refers to Signal*-N, which is the HT-SIG of Figure 4c, as a “header field.” (*See, e.g.*, INTEL-1005, ¶67 (“HT-SIG header field”), ¶20.) Signal*-N carries control information (e.g., the modulation and coding scheme (MCS) field, advanced coding field, and 20MHz or 40MHz bandwidth field) as shown in annotated Figure 4c below bottom. (*See, e.g.*, INTEL-1005, ¶¶67-68.)

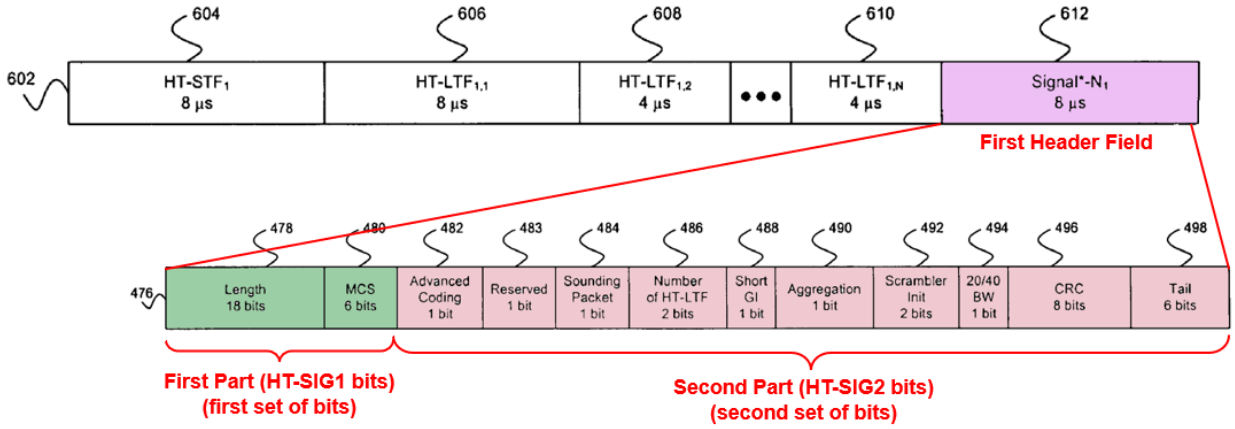

Excerpt of Hansen, Figure 6a (top); Figure 4c (bottom)

117. Signal*-N is “*a first header field*” of the NR greenfield PPDU. INTEL-1001, 1:53-56 (describing that a header contains control information); INTEL-1005, ¶59 (“header field 304 may comprise information that is utilized by a receiver 201 in connection with the processing of information in the data field 306”).)

118. As I mentioned above, the Signal*-N header field of the NR greenfield PPDU uses the HT-SIG field from the TGn Sync proposal, shown in Figure 4c above (at bottom). (INTEL-1005, ¶¶87, 97; *see also*, INTEL-1005, ¶67 (HT-SIG header field of Figure 4c is "in accordance with a TGn Sync proposal").) Figure 4c illustrates the contents of the Signal*-N field prior to coding and modulation by the transmission portion of the transceiver. The Signal*-N field (prior to coding and modulation) comprises 48 total bits that correspond to 2 transmitted OFDM symbols. (INTEL-1005, ¶62 (an HT-SIG field "may be approximately 8 μs in duration, or equivalent in time duration to 2 IEEE 802.11n OFDM symbols and corresponding guard intervals"), ¶¶67-68 (describing the contents of the HT-SIG field), ¶97 (Signal*-N field comprises "time duration of approximately 8 μs, and further comprise 2 OFDM symbols" and is "represented as described in FIG. 4c").)

119. The TGn Sync proposal specifies that HT-SIG "consists of two OFDM symbols: HTSIG1 and HTSIG2." (INTEL-1012, 133:9.) TGn Sync further specifies that the first 24 bits of HT-SIG (Signal*-N) correspond to the first transmitted OFDM symbol (HT-SIG1 symbol) and the second 24 bits of the HT-SIG field correspond to the second transmitted OFDM symbol (HT-SIG2 symbol) as shown in Figure 62 from TGn Sync, reproduced below. (*See* INTEL-1012,

134:1-2; INTEL-1005, ¶97 ("In various embodiments of the invention, as illustrated in the exemplary training fields and header field in FIG. 6 a, the Signal*-N field be [sic] represented as described in FIG. 4 c"), ¶67 ("FIG. 4 c shows an exemplary HT-SIG header field … **in accordance with a TGn Sync proposal** that may be utilized in connection with an embodiment of the invention"); §IV.A.1.) Thus, the Signal*-N header field of the NR greenfield PPDU includes "*two parts*"— HT-SIG1 and HT-SIG2. (INTEL-1005, ¶67 (Figure 4c HT-SIG header field is "in accordance with" the TGn Sync proposal).)

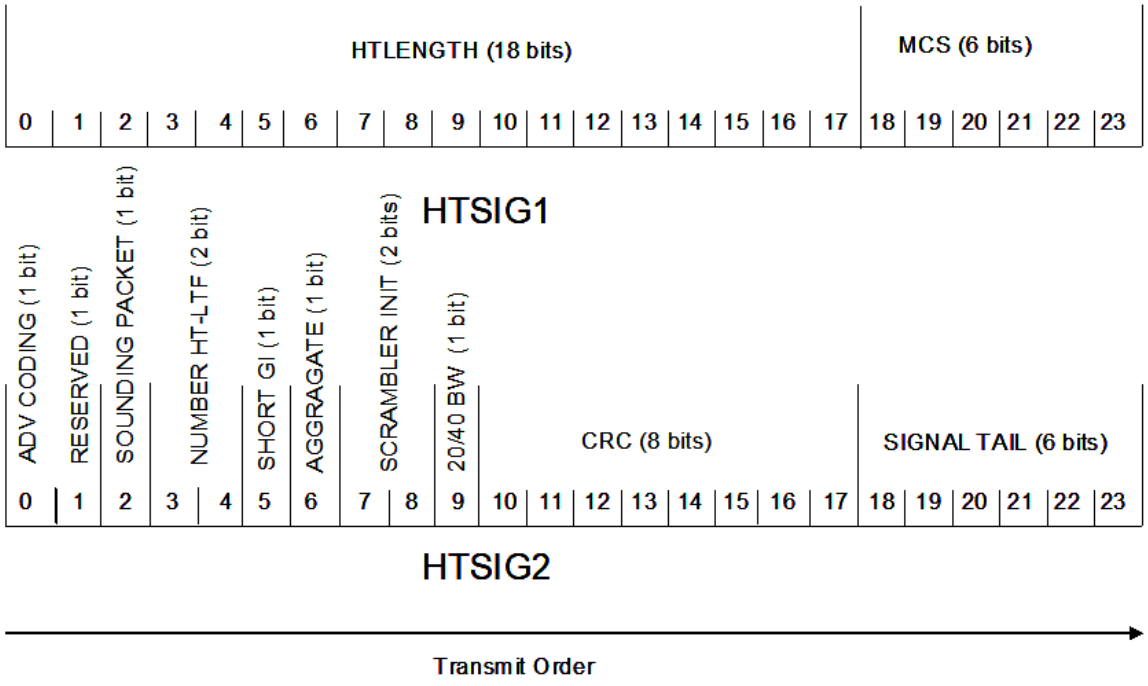

Figure 62: HT SIGNAL FIELD (HTSIG1 and HTSIG2) bit assignment

120. Prior to coding and modulation by the transmitter and after decoding by the receive chain, the HT-SIG1 part of the Signal*-N field (shaded green above) includes an 18-bit length field 478 and a 6-bit MCS field 480 (referred to collectively as the HT-SIG1 bits). (INTEL-1005, ¶¶67-68.) HT-SIG1 is therefore "*a first part*" of the Signal*-N header field "*comprising a first set of header bits of the first header field*."

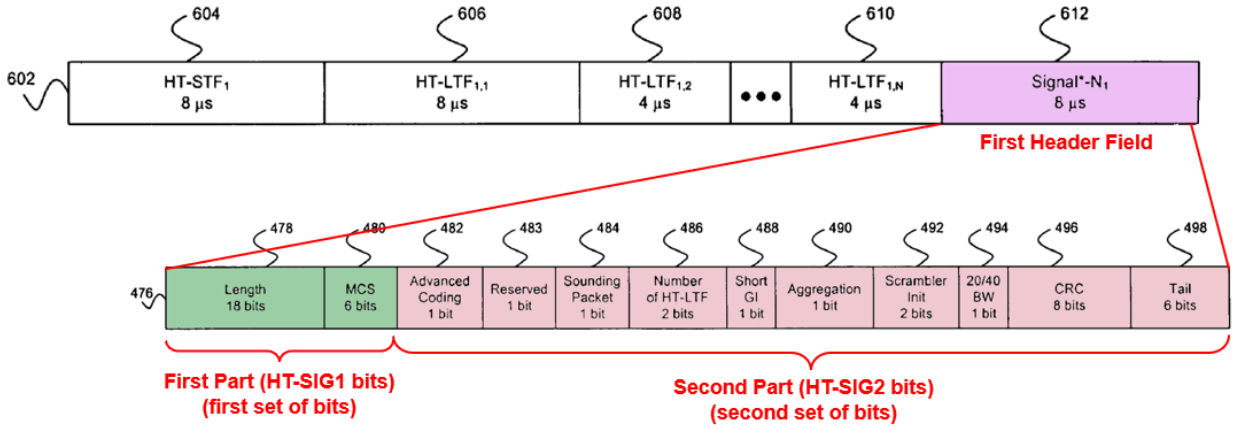

Excerpt of Hansen, Figure 6a (top); Figure 4c (bottom)

121. Prior to coding and modulation by the transmitter and after decoding by the receive chain, the HT-SIG2 part of the Signal*-N field (shaded red above) includes a 1-bit advanced coding field 482, a 1-bit reserved field 483, a 1-bit sounding packet field 484, a 2-bit number of HT-LTF field 486, a 1-bit short GI field, a 1-bit aggregation field 490, a 2-bit scrambler initialization field 492, a 1-bit 20 MHz or 40 MHz bandwidth (BW) field 494, an 8-bit cyclical redundancy check

field 496, and a 6-bit tail field 498 (referred to collectively as the HT-SIG2 bits). (INTEL-1005, ¶¶67-68.) HT-SIG2 is therefore "*a second part*" of Signal*-N "*comprising a second set of header bits of the first header field*."

122. The combination of Hansen and July 2005 WWiSE therefore discloses a "*first packet type* [NR greenfield PPDU] *comprising a first header field* [Signal*-N], *wherein the first header field comprises two parts, a first part* [HT-SIG1] *comprising a first set of header bits of the first header field and a second part* [HT-SIG2] *comprising a second set of header bits of the first header field*" [1B].

123. The "*first set of header bits of the first header field*" (length and MCS) includes different fields than the "*second set of header bits of the first header field*" (advanced coding, reserved, sounding packet, number of HT-LTF, short GI, aggregation, scrambler initialization, 20 or 40 MHz bandwidth, CRC, and tail). Accordingly, the combination of Hansen and July 2005 WWiSE also discloses "*the first set of header bits of the first header field* [HT-SIG1 bits] *is different than the second set of header bits* [HT-SIG2 bits] *of the first header field*" [1C].

(ii) Order of Transmission/Reception

124. An OFDM transmitter transmits a PPDU over the wireless medium as a sequence of OFDM symbols. An OFDM receiver receives the PPDU over the wireless medium as the same sequence of OFDM symbols. The following exemplary figures from July 2005 WWiSE illustrate the transmitted PPDU for two antennas, 20 MHz greenfield operation (Figure 007) and the transmitted PPDU for one antenna, 40 MHz, greenfield operation (Figure 011). (INTEL-1006, 67:1-3, 68:1-4.) As shown in these figures, the PPDU includes a sequence of OFDM symbols that are transmitted in order starting with the first training sequence of the preamble. This sequence of ODFM symbols are received in the same order they are transmitted.

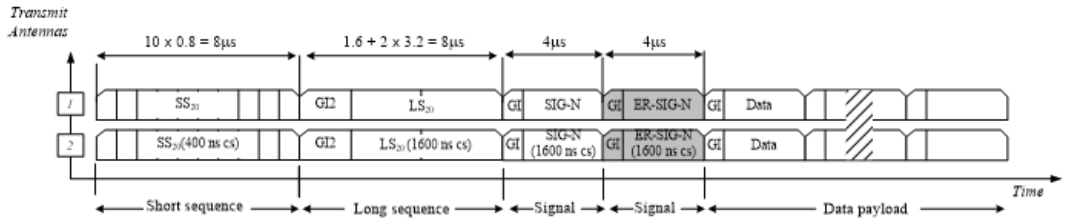

Figure 007 – MIMO-OFDM Training structure for N_{TX} = 2, 20 MHz, greenfield operation. The shaded field indicates the optional duplicate SIG-N for extended range communication.

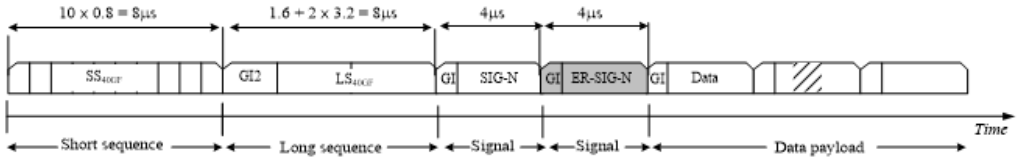

Figure 011 – MIMO-OFDM Training structure for N_{TX}=1, 40 MHz, greenfield operation. The shaded field indicates the optional duplicate SIG-N for extended range communication.

125. The ordering of OFDM symbols in the NR greenfield PPDU ("*first packet type*") reflects the order the OFDM symbols of the PPDU are transmitted over the wireless medium by the transmitter and the order the same OFDM symbols are received over the wireless medium by the receiver. Hansen teaches that its Signal*-N field, when transmitted, comprises "a time duration of approximately 8 μs, and further **comprise[s] 2 OFDM symbols**." (INTEL-1005, ¶97.) Consistent with Hansen, the TGn Sync proposal sets forth that "HTSIG consists of two OFDM symbols: HTSIG1 and HTSIG2"." (INTEL-1012, 133:9-10; 121:1-2 (Figure 55, mapping HT-SIG header bits to 8μs header field in transmitted PPDU), 133:27 (explaining symbol duration is 4μs).)

126. The TGn Sync proposal specifies that "**HTSIG1 shall be transmitted first in time**." (INTEL-1012, 133:9-10; INTEL-1005, ¶67 (HT-SIG header field of Figure 4c "in accordance with a TGn Sync proposal"), ¶97 (Signal*-N is "as described in FIG. 4c").) Thus, in the NR greenfield PPDU, the HT-SIG1 symbol is transmitted and therefore received before the HT-SIG2 symbol. The following figure illustrates this ordering in the NR greenfield PPDU with the HT-SIG1 and HT-SIG2 symbols inserted for the Signal*-N header. The NR greenfield PPDU below shows the order the OFDM symbols making up the PPDU are transmitted and received over the wireless medium, with the HT-STF (short training field)

OFDM symbol being transmitted first. The OFDM symbols of the NR greenfield PPDU are received in the same order that they are transmitted, with HT-STF (short training field) being received first.

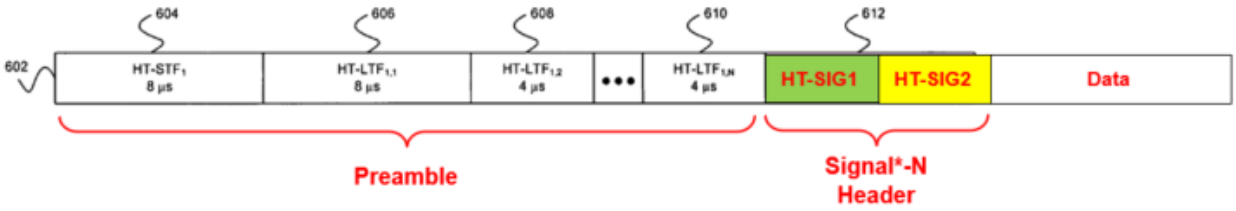

NR Greenfield PPDU
(Hansen's Figure 3a and Excerpt from Figure 6a with Signal*-N symbols)

b. "*Second Packet Type*"

(i) Content

127. The combination of Hansen and July 2005 WWiSE discloses the "*second packet type comprising a second header field, wherein the second header field comprises four parts, a first part comprising a first set of header bits of the second header field, a second part comprising a second set of header bits of the second header field, a third part comprising a third set of header bits of the second header field and a fourth part comprising a fourth set of header bits of the second header field*" [1G].

128. As I discussed in §IV.A.3, the ER greenfield PPDU in the combination of Hansen and July 2005 WWiSE includes the "Long Signal*-N" field which repeats each of the HT-SIG1 and HT-SIG2 parts of Hansen's Signal*-

N header field. (*See* §IV.A.3; INTEL-1006, 69:16-18 ("SIG-N is composed of two consecutive MIMO-OFDM symbols: The SIG-N MIMO-OFDM symbol is followed by a second MIMO-OFDM symbol, denoted as ER-SIG-N"), 67:1-69:7 (Figures 007-016, referring to "duplicate SIG-N"), 50:9-10 (referring to header with repeated symbol as the "long SIG-N").) As I discussed above in §IV.B.3.a, the Signal*-N field is a header field. For the same reasons, the "Long Signal*-N" field is the "*second header field*."

129. In the "Long Signal*-N" of the ER greenfield PPDU, the two parts of Signal*-N (HT-SIG1 and HT-SIG2) are repeated, resulting in a four-part header having two HT-SIG1 sparts and two HT-SIG2 parts. The following figure repeats Hansen's Figure 4c to illustrate the four parts of the Long Signal*-N field in the combination of Hansen and July 2005 WWiSE, prior to coding and modulation. Thus, the "Long Signal*-N" ("*second header field*") of the ER greenfield PPDU "*comprises four parts*."

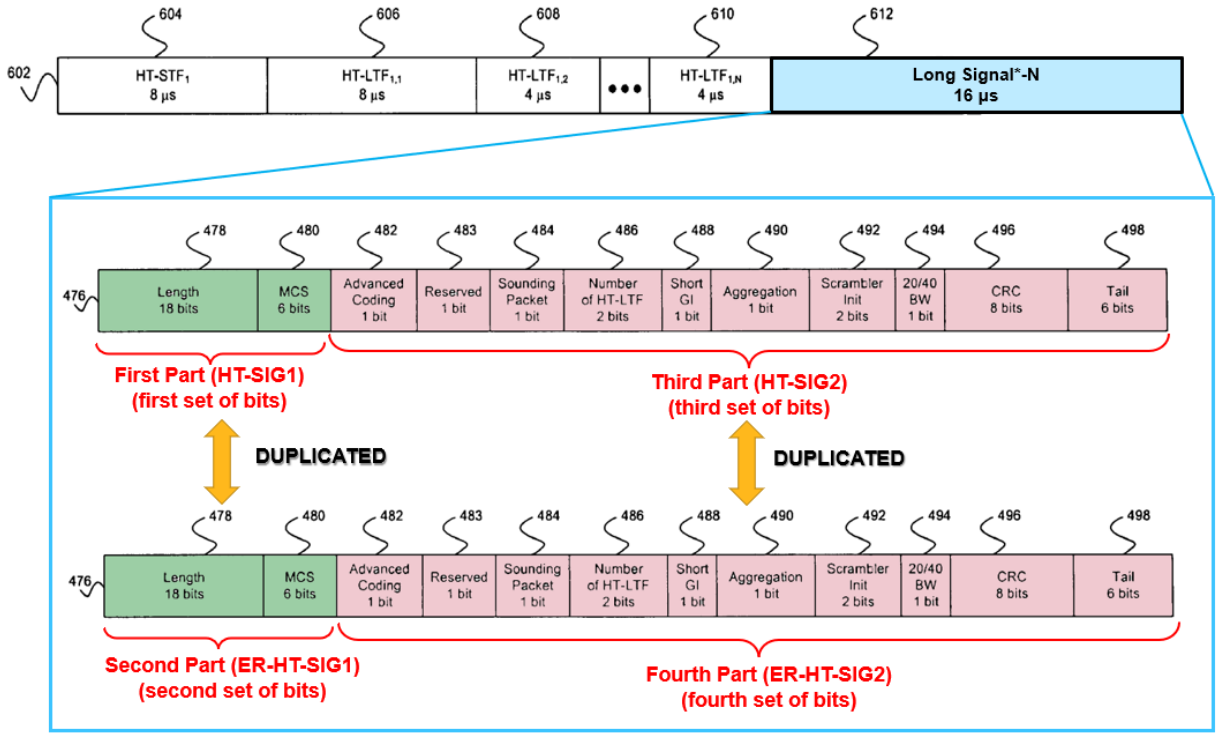

130. Prior to coding and modulation at the transmitter and after decoding by the receive chain, the first HT-SIG1 part of the Long Signal*-N field (shaded green above) includes an 18-bit length field 478 and 6-bit MCS field 480. HT-SIG1 is therefore a "*first part*" of Long Signal*-N "*comprising a first set of header bits of the second header field*." (*See* INTEL-1005, ¶¶67-68.)

131. Prior to coding and modulation by the transmitter and after decoding by the receive chain, the repeated HT-SIG1 part of the Long Signal*-N field (ER-HT-SIG1; shaded green above) includes an 18-bit length field 478 and 6-bit MCS field 480. ER-HT-SIG1 is therefore a "*second part*" of Long Signal*-N "*comprising a second set of header bits of the second header field*." (*See* INTEL-

1005, ¶¶67-68; INTEL-1006, 69:16-18, 67:1-69:3 (Figures 007, 009, 011, 013, and 015, showing duplicated headers for ER greenfield operation).)

132. Prior to coding and modulation by the transmitter and after decoding by the receive chain, the first HT-SIG2 part of the Long Signal*-N field (shaded red above) includes a 1-bit advanced coding field 482, a 1-bit reserved field 483, a 1-bit sounding packet field 484, a 2-bit number of HT-LTF field 486, a 1-bit short GI field, a 1-bit aggregation field 490, a 2-bit scrambler initialization field 492, a 1-bit 20 MHz or 40 MHz bandwidth (BW) field 494, an 8-bit cyclical redundancy check field 496, and a 6-bit tail field 498. HT-SIG2 is therefore a "*third part*" of Long Signal*-N "*comprising a third set of header bits of the second header field*." (*See* INTEL-1005, ¶¶67-68.)

133. Prior to coding and modulation by the transmitter and after decoding by the receive chain, the repeated HT-SIG2 part of the Long Signal*-N field (ER-HT-SIG2; shaded red above) includes a 1-bit advanced coding field 482, a 1-bit reserved field 483, a 1-bit sounding packet field 484, a 2-bit number of HT-LTF field 486, a 1-bit short GI field, a 1-bit aggregation field 490, a 2-bit scrambler initialization field 492, a 1-bit 20 MHz or 40 MHz bandwidth (BW) field 494, an 8-bit cyclical redundancy check field 496, and a 6-bit tail field 498. ER-HT-SIG2 is therefore a "*fourth part*" of Long Signal*-N "*comprising a fourth set of header*

bits of the second header field." (*See* INTEL-1005, ¶¶67-68; INTEL-1006, 69:16-18, 67:1-69:3, Figures 007, 009, 011, 013, and 015, showing duplicated headers for greenfield operation).)

134. Thus, the combination of Hansen and July 2005 WWiSE discloses "*the second packet type* [ER greenfield PPDU] *comprising a second header field* [Long Signal*-N], *wherein the second header field comprises four parts, a first part* [HT-SIG1] *comprising a first set of header bits of the second header field, a second part* [ER-HT-SIG1] *comprising a second set of header bits of the second header field, a third part* [HT-SIG2] *comprising a third set of header bits of the second header field and a fourth part* [ER-HT-SIG2] *comprising a fourth set of header bits of the second header field*" [1G].

135. The "*first set of header bits of the second header field*" (length and MCS) encodes the same fields as the "*second set of header bits of the second header field*" (length and MCS) and "*the third set of header bits of the second header field*" (advanced coding, reserved, sounding packet, number of HT-LTF, short GI, aggregation, scrambler initialization, 20 or 40 MHz bandwidth, CRC, and tail) encodes the same fields as the "*fourth set of header bits of the second header field*" (advanced coding, reserved, sounding packet, number of HT-LTF, short GI, aggregation, scrambler initialization, 20 or 40 MHz bandwidth, CRC, and tail).

Accordingly, the combination of Hansen and July 2005 WWiSE discloses "*the first set of header bits of the second header field is the same as the second set of header bits of the second header field*" and "*the third set of header bits of the second header field is the same as the fourth set of header bits of the second header field*" [1H].

(ii) Order of Transmission/Reception

136. As I discussed in §IV.B.3.a, the Signal*-N field "comprise[s] 2 OFDM symbols," an HT-SIG1 symbol and an HT-SIG2 symbol. (INTEL-1005, ¶97; INTEL-1012, 133:9.) July 2005 WWiSE teaches repeating the PPDU header field. (*See* INTEL-1006, 69:16-18.) Repeating the two-part Signal*-N field as taught by July 2005 WWiSE therefore results in 4 OFDM symbols in the Long Signal*-N header field—two HT-SIG1 symbols and two HT-SIG2 symbols. (*See* INTEL-1006, 69:16-18.)

137. Neither Hansen nor July 2005 WWiSE explicitly discloses the order of transmission/reception for the four OFDM symbols corresponding to the Long Signal*-N header. However, it would have been obvious to a POSITA that the Long Signal*-N header OFDM symbols are transmitted and received in the following order: HT-SIG1, ER-HT-SIG1, HT-SIG2, ER-HT-SIG2, as I illustrate in

the figure below which substitutes the 4 Long Signal*-N symbols into the ER Greenfield PPDU.

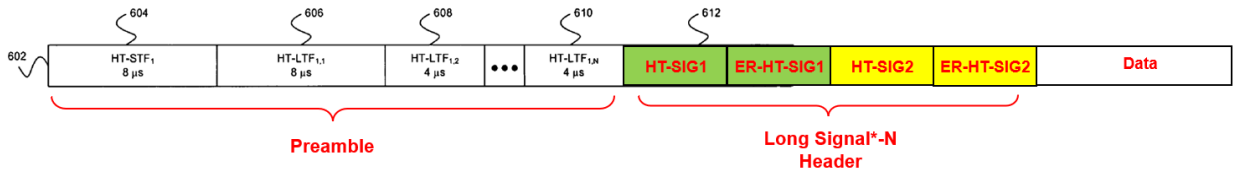

ER Greenfield PPDU

138. First, the transmission ordering of HT-SIG1, ER-HT-SIG1, HT-SIG2, and ER-HT-SIG2 would have been obvious to try. Because TGn Sync requires that "HTSIG1 shall be transmitted first in time", a POSITA would have understood that only two alternatives exist in the combination of Hansen and July 2005 WWiSE for the order of OFDM symbols associated with the four parts of the Long Signal*-N header field:

Alternative (1): HT-SIG1, ER-HT-SIG1, HT-SIG2, and ER-HT-SIG2 or

Alternative (2): HT-SIG1, HT-SIG2, ER-HT-SIG1, and ER-HT-SIG2

139. A POSITA would have had a reasonable expectation of success in pursuing both OFDM symbol ordering alternatives. First, both options merely involve copying (repeating) bit strings during the process of generating OFDM symbols for transmission. For example, as I discuss below, each part could be simply read out of a buffer twice. Such techniques for repetition coding of a

message part associated with an OFDM symbol to create two repeated OFDM symbols would have been known to a POSITA. In fact, the G.9960 standard discloses repetition coding for header bits. (*See* INTEL-1018, 51:1331-1358.) The ’459 patent admits that the G.9960 specification is prior art and “should be familiar to those skilled in the art.” (INTEL-1001, 1:58-59.)

140. Additionally, a POSITA would have understood that the order of Long Signal*-N header parts (and resulting symbols) in a PPDU would be specified in documentation (such as an industry standard) so that a receiver is able to interpret received data after decoding. (INTEL-1006, 67:1-69:17 (illustrating PPDUs); INTEL-1012, 121:1-2 (Figure 55, illustrating PPDU format).) Figure 122 from 802.11a illustrates a figure of an exemplary PPDU transmit procedure provided in an industry standards document for individuals building products for that standard. (INTEL-1015, 33.) Using this Figure and supporting specification, a POSITA would understand the transmit order required for an 802.11a PPDU. Therefore, a POSITA would have had a reasonable expectation of success in implementing both ordering alternatives for a PPDU in a wireless system.

141. For the reasons I discussed above, trying these two alternatives for ordering two repeated OFDM symbols in the Long Signal*-N header field would have led a POSITA to anticipated success with either alternative. Moreover, a

POSITA is an individual with experience with wireless communication protocols. (See §III.C.) The simple concept of repeating parts of a header field one after another would not have required the POSITA to explore new technologies or approaches.

142. Second, July 2005 WWiSE suggests ordering alternative (1). As I discussed in §IV.B.3.a.ii , TGn Sync requires that "HTSIG1 shall be transmitted first in time." (*See* INTEL-1012, 133:9-10.) July 2005 WWiSE teaches repeating a header symbol, placing the repeated (duplicated) symbol immediately after the original symbol. (INTEL-1006, 69:16-18, 67:1-69:17 (Figures 007, 009, 011, 013, and 15 showing greenfield operation).) Based on this suggestion from July 2005 WWiSE, a POSITA would have been motivated to duplicate the Long Signal*-N header fields on a part-by-part (symbol-by-symbol) basis, resulting in the ordering HT-SIG1, ER-HT-SIG1, HT-SIG2, and ER-HT-SIG2.

143. Third, a POSITA would have been motivated to pursue the ordering alternative (1) to improve efficiency in both the receive chain and transmission chain. When using repeated symbols, the receive chain demodulates both symbols, combines the symbols, and decodes the combined symbol. For the transmission order HT-SIG1, ER-HT-SIG1, HT-SIG2, ER-HT-SIG2, the first symbol (HT-SIG1) is received, demodulated, and stored in a buffer at the receiver. Then, the

second HT-SIG1 symbol (ER-HT-SIG1) is received, demodulated, and combined with HT-SIG1 from the buffer and the combined demodulated symbol is decoded. The same process is repeated for HT-SIG2/ER-HT-SIG2.

144. However, if the transmission order was HT-SIG1, HT-SIG2, ER-HT-SIG1, ER-HT-SIG2, the receive chain would need to buffer demodulated HT-SIG1 and then buffer demodulated HT-SIG2. When the second HT-SIG1 symbol (ER-HT-SIG1) is received, it is demodulated and combined with the first HT-SIG1symbol. Thus, this second ordering would require an extra buffer to store both demodulated HT-SIG1 and demodulated HT-SIG2, before the demodulated symbols could be combined.

145. A POSITA would have understood that generating the repeated header fields for ER packets at the transmit side could be efficiently implemented by merely reading the HT-SIG1 and HT-SIG2 fields out of a buffer twice, instead of re-generating them from scratch. A POSITA would have further understood that generating HT-SIG1, repeating HT-SIG1 as ER-HT-SIG1, then generating HT-SIG2, and repeating HT-SIG2 as ER-HT-SIG2 would only require a buffer large enough to hold one symbol's worth of data, whereas generating HT-SIG1 and HT-SIG2 together, and then duplicating both as ER-HT-SIG1 and ER-HT-SIG2 would

require a buffer large enough to hold two symbols' worth of data, thereby reducing efficiency.

146. Therefore, it would have been obvious to a POSITA that the Long Signal*-N header OFDM symbols are transmitted by the transmitter and received at the receiver in the following order: HT-SIG1, ER-HT-SIG1, HT-SIG2, ER-HT-SIG2.

4. "*Demodulator*" Limitations

147. Claim 1 recites the following limitations directed to "*a demodulator*."

[1D] *a demodulator operable to demodulate a first OFDM symbol followed by a second OFDM symbol,*

[1E] *wherein the first OFDM symbol is used to receive the first part of the first header field and the second OFDM symbol is used to receive the second part of the first header field,*

[1I] *the demodulator further operable to demodulate a first OFDM symbol followed by a second OFDM symbol followed by a third OFDM symbol followed by a fourth OFDM symbol,*

[1J] *wherein the first OFDM symbol is used to receive the first part of the second header field, the second OFDM symbol is used to receive the second part of the second header field, the third OFDM symbol is used to receive the third part of the second header field, the fourth OFDM symbol is used to receive the fourth part of the second header field,*

148. The combination of Hansen and July 2005 WWiSE discloses "*a demodulator operable to demodulate*" the OFDM symbols associated with the "*first header field*" and the OFDM symbols associated with the "*second header field*."

149. In Hansen's transceiver, illustrated in annotated Figure 2b below, FFT block(s) 220 (shaded orange) receive signals from the AFE/ADC block 216. July 2005 WWiSE teaches that header field is transmitted simultaneously from all TX antennas in all modes. (*See* INTEL-1006, 70:18-21 ("The SIG-N MIMO OFDM symbol is transmitted simultaneously from all TX antennas in all modes").) The TGn Sync proposal similarly teaches that the header field is either transmitted by a single antenna or by all antennas in parallel. (*See* INTEL-1012, 121:24-122:2; INTEL-1005, ¶HT-SIG header field of Figure 4c is "in accordance with a TGn Sync proposal"); ¶97 (Signal*-N is "represented as described in FIG. 4c.")) Accordingly, each antenna and AFE/ADC block receives the same signal associated with the header and passes the same header signal to the FFT blocks 220.

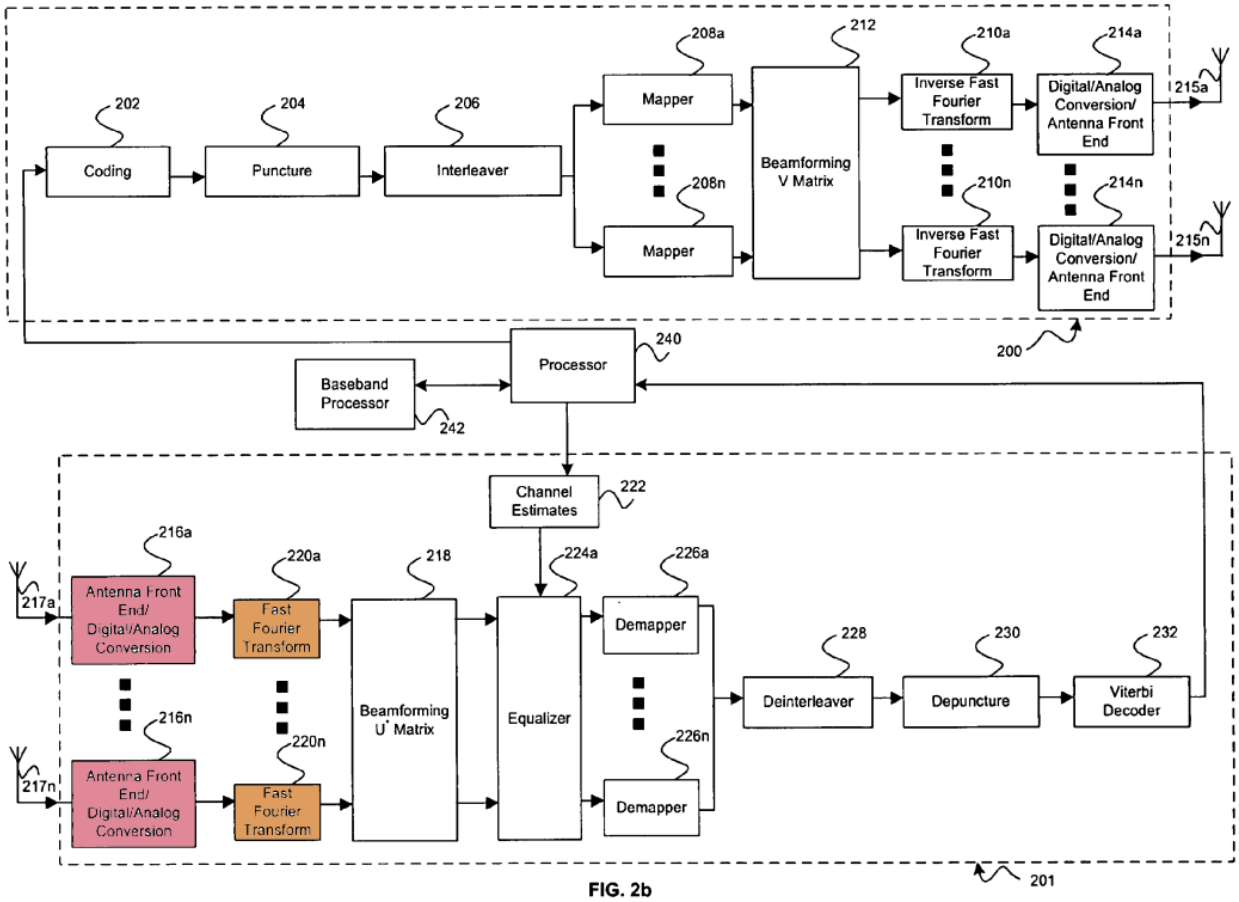

FIG. 2b

Hansen, Annotated Figure 2b

150. An FFT block 220 "appl[ies] an n-point FFT technique" to "**demodulat[e]** the signal by a plurality of carrier signals based on the n sub-band frequencies utilized in the transmitter 200." (INTEL-1005, ¶51.) The demodulated signals are "mathematically integrated over one sub band frequency period" by an FFT block to extract the OFDM symbol. (INTEL-1005, ¶51.) Because each FFT block 220 receives the same header signal, each FFT block produces the same OFDM symbols associated with the header.

151. FFT block 220 is therefore a "*demodulator*" that demodulates OFDM symbols. As highlighted by Figure 2b above, the "*demodulator*" (shaded orange) is a separate component from the "*wireless OFDM receiver*."

a. *"First Packet Type"* - Order of Symbol Demodulation

152. The combination of Hansen and July 2005 WWiSE discloses the "*demodulator operable to demodulate a first OFDM symbol followed by a second OFDM symbol*" [1D] where "*the first OFDM symbol is used to receive the first part of the first header field and the second OFDM symbol is used to receive the second part of the first header field*" [1E].

153. The format of the NR greenfield PPDU is illustrated in the following figure. The symbols of a PPDU are received and demodulated in the order of transmission. As I discussed above, each FFT receives the same signal corresponding to the transmitted Signal*-N header field. (*See*, INTEL-1006, 70:18-21 ("The SIG-N MIMO OFDM symbol is transmitted simultaneously from all TX antennas in all modes"); INTEL-1012, 121:24-122:2; INTEL-1005, ¶HT-SIG header field of Figure 4c is "in accordance with a TGn Sync proposal"); ¶97 (Signal*-N is "represented as described in FIG. 4c.")) Because HT-SIG1 is transmitted first, it is received and demodulated first. The combination of Hansen and July 2005 WWiSE therefore discloses a "*demodulator* [FFT] *operable to*

demodulate a first OFDM symbol [HT-SIG1 symbol] *followed by a second OFDM symbol* [HT-SIG2 symbol]" [1D].

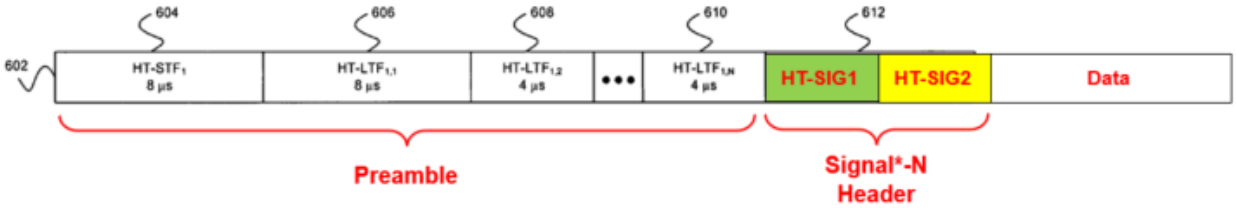

NR Greenfield PPDU
(Hansen's Figures 3a, 6a, and 4c)

154. As I discussed in §IV.B.3.a, Signal*-N consists of two symbols: HT-SIG1 and HT-SIG2. Figure 62 from the TGn Sync proposal, reproduced below, illustrates the bit assignments that correspond to the HT-SIG1 and HT-SIG2 OFDM symbols. (INTEL-1012, 133:9, 134:1-2; INTEL-1005, ¶67 (HT-SIG header field of Figure 4c is "in accordance with a TGn Sync proposal"); ¶97 (Signal*-N is "represented as described in FIG. 4c."); *See also*, §IV.B.3.a) Because the HT-SIG1 bits are associated with the HT-SIG1 symbol and the HT-SIG2 bits are associated with the HT-SIG2 symbol, in the combination of Hansen and July 2005 WWiSE a "*first OFDM symbol* [HT-SIG1 symbol] *is used to receive the first part of the first header field* [HT-SIG1 bits]" and a "*second OFDM symbol* [HT-SIG2 symbol] *is used to receive the second part of the first header field*."

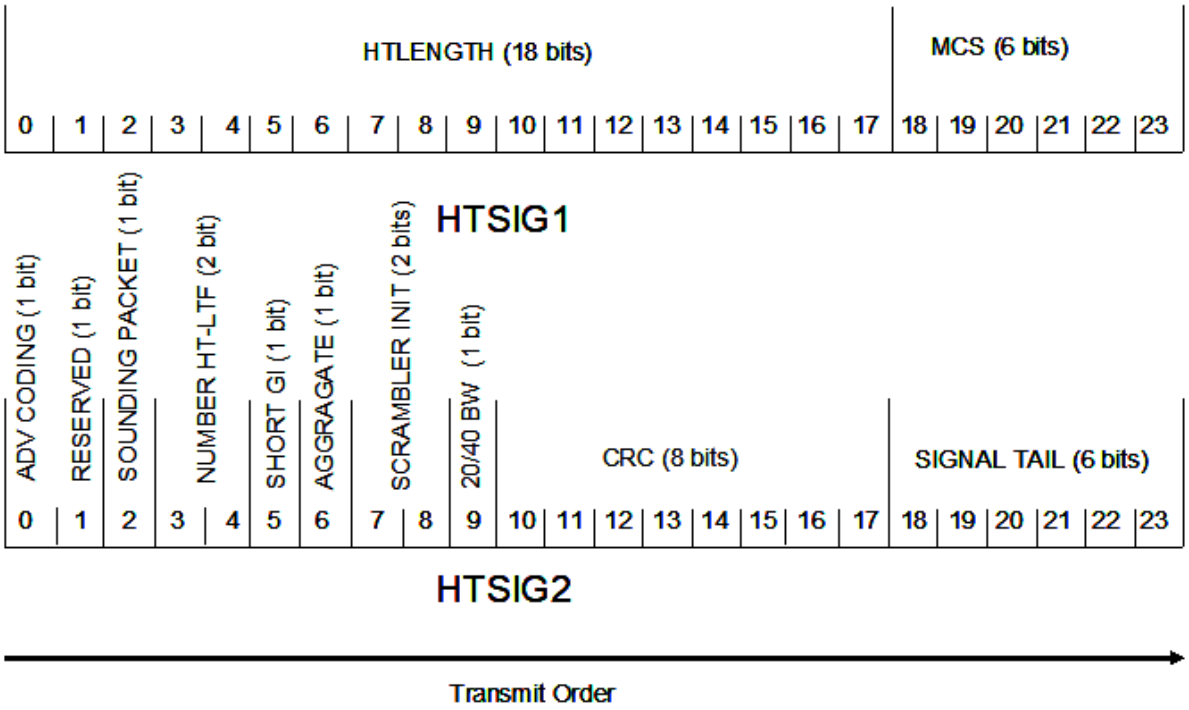

Figure 62: HT SIGNAL FIELD (HTSIG1 and HTSIG2) bit assignment

b. "*Second Packet Type*" - Order of Symbol Demodulation

155. The combination of Hansen and July 2005 WWiSE renders obvious the limitation that the "*demodulator* [is] *further operable to demodulate a first OFDM symbol followed by a second OFDM symbol followed by a third OFDM symbol followed by a fourth OFDM symbol*" [1I] where "*the first OFDM symbol is used to receive the first part of the second header field, the second OFDM symbol is used to receive the second part of the second header field, the third OFDM symbol is used to receive the third part of the second header field, the fourth OFDM symbol is used to receive the fourth part of the second header field*" [1J].

156. Each of the four symbols in the Long Signal*-N header field corresponds to a set of bits as illustrated below: HT-SIG1 symbol corresponds to HT-SIG1 bits, ER-HT-SIG1 symbol corresponds to ER-HT-SIG1 bits, HT-SIG2 symbol corresponds to HT-SIG2 bits, ER-HT-SIG2 symbol corresponds to ER-HT-SIG2 bits. (*See* §IV.B.3.b.)

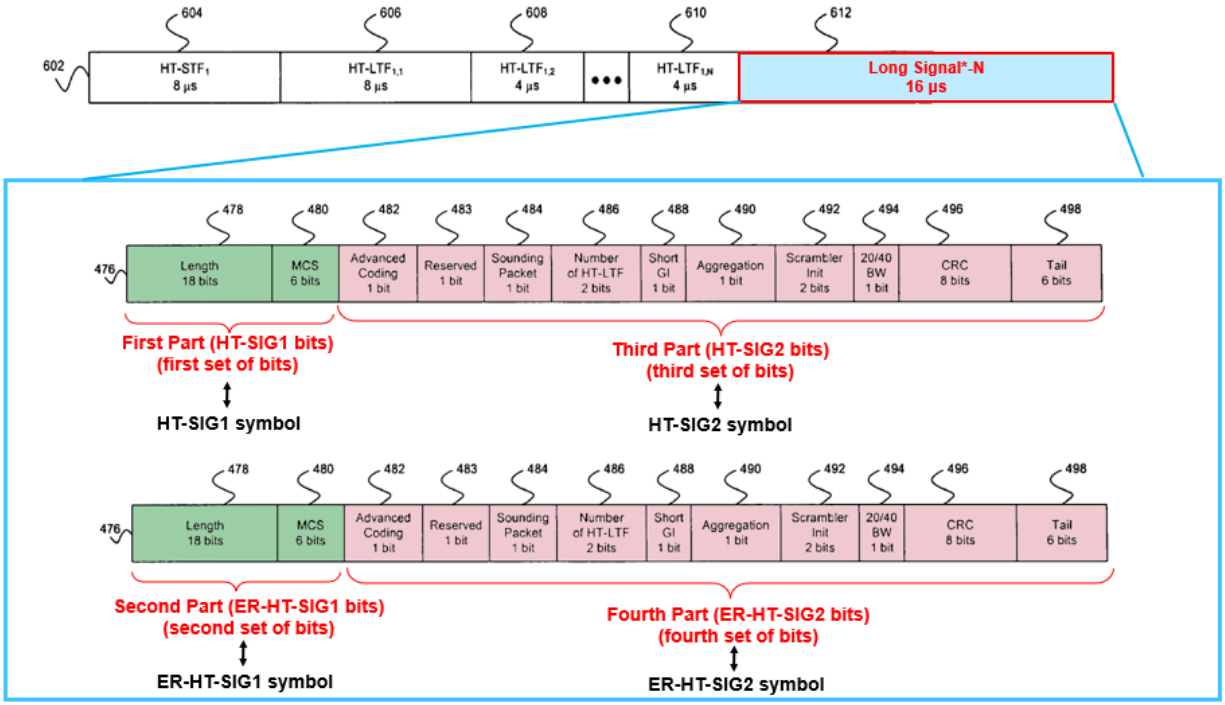

157. Thus, in the combination of Hansen and July 2005 WWiSE, a "*first OFDM symbol* [HT-SIG1 symbol] *is used to receive the first part of the second header field* [HT-SIG1 bits]", a "*second OFDM symbol* [ER-HT-SIG2 symbol] *is used to receive the second part of the second header field* [ER-HT-SIG1 bits]", a "*third OFDM symbol* [HT-SIG2 symbol] *is used to receive the third part of the*

second header field [HT-SIG2 bits]", and a "*fourth OFDM symbol* [ER-HT-SIG2 symbol] *is used to receive the fourth part of the second header field* [ER-HT-SIG2 bits]" [1J].

158. As discussed in §IV.B.3.b, the combination of Hansen and July 2005 WWiSE renders obvious the transmission and reception order for the Long Signal*-N header (HT-SIG1, ER-HT-SIG1, HT-SIG2, ER-HT-SIG2) in the ER greenfield PPDU, illustrated in the following figure. As I discussed above, each FFT receives the same signal corresponding to the transmitted Long Signal*-N header field. (*See*, INTEL-1006, 70:18-21 ("The SIG-N MIMO OFDM symbol is transmitted simultaneously from all TX antennas in all modes"); INTEL-1012, 121:24-122:2; INTEL-1005, ¶67 (HT-SIG header field of Figure 4c is "in accordance with a TGn Sync proposal"); ¶97 (Signal*-N is "represented as described in FIG. 4c.")) Because symbols of a PPDU are received and demodulated in the order of transmission, the combination of Hansen and July 2005 WWiSE renders obvious the limitation "*the demodulator* [FFT] *further operable to demodulate a first OFDM symbol* [HT-SIG1 symbol] *followed by a second OFDM symbol* [ER-HT-SIG1 symbol] *followed by a third OFDM symbol* [HT-SIG2 symbol] *followed by a fourth OFDM symbol* [ER-HT-SIG2 symbol]" [1I].

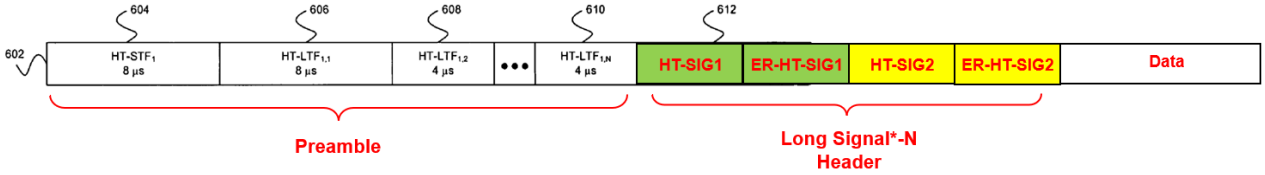

ER Greenfield PPDU

c. *"Received in a Different Order"* Limitations [1K]/[1L]

159. The combination of Hansen and July 2005 WWiSE discloses "*the second set of header bits of the second header field received using the second OFDM symbol are received in a different order than the first set of header bits of the second header field received using the first OFDM symbol*" [1K] and "*the fourth set of header bits of the second header field received using the fourth OFDM symbol are received in a different order than the third set of header bits of the second header field received using the third OFDM symbol*" [1L].

160. The '459 patent does not mention or describe the **reception** of header bits of one symbol in a different order than the same header bits repeated in a different symbol. At most, the '459 patent teaches that "the header bits are **demodulated** from the D OFDM symbols in the same order or in a **different order**" which indicates the header bits were received on different OFDM subcarriers. (INTEL-1001, 9:44-46.)

161. July 2005 WWiSE describes an OFDM subcarrier frequency premutation for the repeated ER-SIG-N. Specifically, July 2005 WWiSE explains that the "frequency domain MIMO-OFDM symbol ER-SIG-N is derived from MIMO-OFDM symbol SIG-N by applying the following permutation on the subcarrier indices (as described in subclause 20.3.2.4) of the OFDM data symbols composing SIG-N:

- For 20Mhz data transmissions: With SIG-N=(0, s(1), s(2) …, s(28), 0, …, 0, s(-28), s(-27), …, s(-1)),
  ER-SIG-N is specified as ER-SIG-N=(0, s(-28), s(-27), …, s(-1), 0, …, 0, s(1), s(2) …, s(28));

- For 40Mhz data transmissions: With SIG-N=(0, 0, 0, s(3), s(4) …, s(58), 0, …, 0, s(-58), s(-57), …, s(-3), 0, 0),
  ER-SIG-N is specified as ER-SIG-N=(0, 0, 0, s(-58), s(-57), …, s(-3), 0, …, 0, s(3), s(2) …, s(58), 0, 0).

(INTEL-1006, 69.)

162. Because these subcarriers are used for transmission of the OFDM symbol, the same subcarriers are used in the reception of the OFDM symbol. Therefore, consistent with the discussion of transmission, the following permutation exists on the subcarrier indices of the received OFDM symbols for

ER-HT-SIG1 and ER-HT-SIG2 in the combination of Hansen and July 2005 WWiSE:

- For 20Mhz data reception: With SIG-N=(0, s(1), s(2) …, s(28), 0, …, 0, s(-28), s(-27), …, s(-1)),
  ER-SIG-N is specified as ER-SIG-N=(0, s(-28), s(-27), …, s(-1), 0, …, 0, s(1), s(2) …, s(28));

- For 40Mhz data reception: With SIG-N=(0, 0, 0, s(3), s(4) …, s(58), 0, …, 0, s(-58), s(-57), …, s(-3), 0, 0),
  ER-SIG-N is specified as ER-SIG-N=(0, 0, 0, s(-58), s(-57), …, s(-3), 0, …, 0, s(3), s(2) …, s(58), 0, 0).

163. As specified in July 2005 WWiSE, for 20 MHz transmission and reception, the bits mapped to subcarrier s(1) for SIG-N are mapped to subcarrier s(-28) for ER-SIG-N, the bits mapped to subcarrier s(2) for SIG-N are mapped to subcarrier s(-27), and so on. A similar permutation is applied to the 40MHz transmission and reception. A POSITA would understand that applying July WWiSE's frequency permutation to the repeated symbols (ER-HT-SIG1 and ER-HT-SIG2) but not to the original HT-SIG1 and HT-SIG2 symbols would cause the modulated bits associated with the repeated symbols to be output from the FFT (the demodulator) in a different order than their non-repeated counterparts, consistent with the '459 patent's disclosures. (INTEL-1001, 9:44-46.)

164. The combination of Hansen and July 2005 WWiSE therefore discloses "*the second set of header bits of the second header field received using the second OFDM symbol are received in a different order than the first set of header bits of the second header field transmitted using the first OFDM symbol*" [1K] and "*the fourth set of header bits of the second header field received using the fourth OFDM symbol are received in a different order than the third set of header bits of the second header field transmitted using the third OFDM symbol*" [1L], in the same manner and to the same extent as the sole embodiment described in the specification relating to different ordering.

d. *"First channel bandwidth is at least two times wider than the second channel bandwidth"* [1M]

165. The combination of Hansen and July 2005 WWiSE discloses or at least suggests "*the first channel bandwidth is at least two times wider than the second channel bandwidth*" [1M]. Hansen's transceiver utilizes "20 MHz channels, with an optional utilization of 40 RF MHz channels" for transmission of PPDUs and indicates the channel bandwidth used through the 20 MHz or 40MHz bandwidth field of the Signal*-N header. (*See* INTEL-1005, ¶¶34-35, 67-68, 78, 97.) A 40 MHz bandwidth "*is at least two times wider*" than the 20 MHz bandwidth.

166. An ER capable device that is also a 40 MHz capable device is operable to transmit and receive both ER greenfield PPDUs and NR greenfield PPDUs in the combination of Hansen and July 2005 WWiSE. (*See* INTEL-1006, 50:9-10; § IV.A.2-3.) An ER capable device determines whether to transmit on the 20 MHz channel or the 40 MHz channel depending on the needed transmission range and the nature of the receiving device. A POSITA would have been motivated to transmit and receive the NR greenfield PPDU ("*first packet type*") on the 40 MHz bandwidth to use the largest bandwidth for the highest throughput. This reflects the well understood desire of individuals for maximum communication speed during standard (normal) communication. A POSITA would have also understood, however, that extending range often involves using lower throughput methods, including narrower channels. A POSITA would therefore have been motivated to transmit and receive the ER greenfield PPDU ("*second packet type*") on the 20 MHz bandwidth because doing so would have allocated the available transmit power to a narrower frequency band, thereby increasing transmit power spectral density, thereby maximizing range.

167. Thus, the combination of Hansen and July 2005 WWiSE discloses or at least suggests "*the first channel bandwidth is at least two times wider than the second channel bandwidth*" [1M].

C. Independent Claim 9

168. Claim 9 is substantially the same as claim 1 with the primary difference being that claim 1 is recited as a system claim whereas claim 9 is recited as a method claim. I have reproduced both claims 9 and 1 below to highlight the similarity. I address the individual limitations below.

Claim 9	Claim 1
[9P] A method of operating a wireless OFDM (Orthogonal Frequency Division Multiplexing) transceiver comprising:	**[1P]** A wireless OFDM (Orthogonal Frequency Division Multiplexing) transceiver comprising:
[9A] receiving, by a wireless OFDM communications receiver over a wireless communication channel, a first packet type in a first channel bandwidth,	**[1A]** a wireless OFDM communications receiver operable to receive, over a wireless communication channel, a first packet type in a first channel bandwidth,
[9B] the first packet type comprising a first header field, wherein the first header field comprises two parts, a first part comprising a first set of header bits of the first header field and a second part comprising a second set of header bits of the first header field,	**[1B]** the first packet type comprising a first header field, wherein the first header field comprises two parts, a first part comprising a first set of header bits of the first header field and a second part comprising a second set of header bits of the first header field,
[9C] wherein the first set of header bits of the first header field is different than the second set of header bits of the first header field;	**[1C]** wherein the first set of header bits of the first header field is different than the second set of header bits of the first header field; and
[9D] demodulating, by a demodulator, a first OFDM symbol followed by a second OFDM symbol,	**[1D]** a demodulator operable to demodulate a first OFDM symbol followed by a second OFDM symbol,
[9E] wherein the first OFDM symbol is used to receive the first part of the first	**[1E]** wherein the first OFDM symbol is used to receive the first part of the first

Claim 9	Claim 1
header field and the second OFDM symbol is used to receive the second part of the first header field;	header field and the second OFDM symbol is used to receive the second part of the first header field,
[9F] receiving, by the wireless OFDM communications receiver over the wireless communication channel, a second packet type in a second channel bandwidth;	**[1F]** the wireless OFDM communications receiver further operable to receive, over the wireless communications channel, a second packet type in a second channel bandwidth,
[9G] the second packet type comprising a second header field, wherein the second header field comprises four parts, a first part comprising a first set of header bits of the second header field, a second part comprising a second set of header bits of the second header field, a third part comprising a third set of header bits of the second header field and a fourth part comprising a fourth set of header bits of the second header field,	**[1G]** the second packet type comprising a second header field, wherein the second header field comprises four parts, a first part comprising a first set of header bits of the second header field, a second part comprising a second set of header bits of the second header field, a third part comprising a third set of header bits of the second header field and a fourth part comprising a fourth set of header bits of the second header field,
[9H] wherein the first set of header bits of the second header field is the same as the second set of header bits of the second header field, wherein the third set of header bits of the second header field is the same as the fourth set of header bits of the second header field,	**[1H]** wherein the first set of header bits of the second header field is the same as the second set of header bits of the second header field, wherein the third set of header bits of the second header field is the same as the fourth set of header bits of the second header field,
[9I] and demodulating, by the demodulator, a first OFDM symbol followed by a second OFDM symbol followed by a third OFDM symbol followed by a fourth OFDM symbol,	**[1I]** the demodulator further operable to demodulate a first OFDM symbol followed by a second OFDM symbol followed by a third OFDM symbol followed by a fourth OFDM symbol,
[9J] wherein the first OFDM symbol is used to receive the first part of the	**[1J]** wherein the first OFDM symbol is used to receive the first part of the

Claim 9	Claim 1
second header field, the second OFDM symbol is used to receive the second part of the second header field, the third OFDM symbol is used to receive the third part of the second header field, the fourth OFDM symbol is used to receive the fourth part of the second header field,	second header field, the second OFDM symbol is used to receive the second part of the second header field, the third OFDM symbol is used to receive the third part of the second header field, the fourth OFDM symbol is used to receive the fourth part of the second header field,
[9K] wherein the second set of header bits of the second header field received using the second OFDM symbol are received in a different order than the first set of header bits of the second header field received using the first OFDM symbol,	**[1K]** wherein the second set of header bits of the second header field received using the second OFDM symbol are received in a different order than the first set of header bits of the second header field received using the first OFDM symbol,
[9L] wherein the fourth set of header bits of the second header field received using the fourth OFDM symbol are received in a different order than the third set of header bits of the second header field received using the third OFDM symbol, and	**[1M]** wherein the fourth set of header bits of the second header field received using the fourth OFDM symbol are received in a different order than the third set of header bits of the second header field received using the third OFDM symbol, and
[9M] wherein the first channel bandwidth is at least two times wider than the second channel bandwidth.	**[1M]** wherein the first channel bandwidth is at least two times wider than the second channel bandwidth.

169. Hansen "relate[s] to a method and system for compromise greenfield preambles for 802.11n." (*See* INTEL-1005, ¶7, claim 1.) For this reason and the reasons discussed in §IV.B.1), combination of Hansen and July 2005 WWiSE

discloses a "*method of operating a wireless OFDM (Orthogonal Frequency Division Multiplexing) transceiver*" [9P].

170. Limitations [9B], [9C], [9E], [9G], [9H], [9J], [9K], [9L], and [9M] are identical to limitations [1B], [1C], [1E], [1G], [1H], [1J], [1K], [1L], and [1M]. Accordingly, for the reasons discussed in §§V.B.3-4, the combination of Hansen and July 2005 WWiSE renders limitations [9B],[9C], [9E], [9G], [9H], [9J], [9K], [9L], and [9M] obvious.

171. For the "*wireless OFDM communications receiver*" limitations, limitations [9A] and [9F] recite "*receiving, by the wireless OFDM communications receiver*" whereas limitations [1A] and [1F] recite the "*wireless OFDM receiver [] operable to receive*." The difference between the limitations is immaterial because as I explained in §IV.B.2, the "*wireless OFDM communication receiver*" of the combination of Hansen and July 2005 WWiSE both "*receives*" and "*is operable to receive*" the first and second packet types. The combination of Hansen and July 2005 WWiSE therefore discloses limitations [9A] and [9F] for the same reasons I discussed in §IV.B.2.

172. For the "*demodulator*" limitations, limitations [9D] and [9I] recite "*demodulating, by demodulator, …*" whereas limitations [1D] and [1I] recite a "*demodulator operable to [ ] demodulate*." The difference between the limitations

is immaterial because as I explained in §IV.B.4, the "*demodulator*" of the combination of Hansen and July 2005 WWiSE both "*demodulat[es]*" and "*is operable to demodulate*" the OFDM symbols in the order recited. The combination of Hansen and July 2005 WWiSE therefore renders limitations [9D] and [9I] obvious for the same reasons I discussed in §IV.B.4.

D. Dependent Claims

1. Claims 2, 3, 10, and 11

173. For ease of discussion, I have reproduced the language of claims 2, 3, 10, and 11 below.

> 2. *The wireless transceiver of claim 1, wherein the reception of the same header bits in the second OFDM symbol provides diversity to increase a likelihood of correctly receiving header information of the second packet type*.
>
> 3. *The wireless transceiver of claim 1, wherein the reception of the same header bits in the fourth OFDM symbol provides diversity to increase a likelihood of correctly receiving header information of the second packet type*.
>
> 10. *The method of claim 9, wherein the reception of the same header bits in the second OFDM symbol provides diversity to increase a likelihood of correctly receiving header information of the second packet type*.
>
> 11. *The method of claim 9, wherein the reception of the same header bits in the fourth OFDM symbol provides diversity to increase a*

likelihood of correctly receiving header information of the second packet type.

174. Providing diversity is simply the intended result of the repetition of parts of the "*second header field*" (transmitting a symbol corresponding to repeated header bits). The combination of Hansen and July 2005 WWiSE discloses the subject matter of these claims. Diversity is a common technique that improves performance over fading channels by ensuring information symbols pass through multiple signal paths, each of which fades independently. (*See* §III.B.2; INTEL-1024, 59; *see also*, INTEL-1025, 130-131.) This technique "mak[es] sure that reliable communication is possible as long as one of the paths is strong." (INTEL-1024, 59; *see also*, INTEL-1025, 130-131.) Diversity can be achieved over time (through channel coding or interleaving), over frequency (if the channel is frequency-selective), or over space (by using multiple transmit and/or receive antennas that are spaced sufficiently apart. (*See* §III.B.2; INTEL-1024, 59.) A simple mechanism of achieving time diversity uses repetition coding—repeating the same bits in multiple symbols. (*See* §III.B.2; INTEL-1024, 59.)

175. As explained in §IV.A.3, the ER greenfield PPDU of the combination of Hansen and July 2005 WWiSE repeats the HT-SIG1 and HT-SIG2 parts of the Signal*-N field, providing temporal diversity, thereby increasing the likelihood of

correctly receiving the repeated header information. The ER greenfield PPDU further applies a frequency permutation to the repeated parts of Signal-N field (ER-HT-SIG1 and ER-HT-SIG2) providing frequency diversity and further increasing the likelihood of correctly receiving the repeated header information. (*See* INTEL-1030, 21.) For example, when a receiver receives the two repeated parts of the header field, receiver gain improves, allowing weaker signals to be received and decoded more effectively.

176. Because the combination of Hansen and July 2005 WWiSE provides HT-SIG1 header bits corresponding to the first OFDM symbol (HT-SIG1 symbol) and repeated HT-SIG1 header bits (ER-HT-SIG1 bits) correspond to the second OFDM symbol (ER-HT-SIG1 symbol) and a frequency permutation is applied to the ER-HT-SIG1 (second) OFDM symbol, the combination of Hansen and July 2005 WWiSE provides that "*the reception of the same header bits in the second OFDM symbol provides diversity to increase a likelihood of correctly receiving header information of the second packet type*" [2]/[10].

177. Because the combination of Hansen and July 2005 WWiSE provides HT-SIG2 header bits corresponding to the third OFDM symbol (HT-SIG1 symbol) and repeated HT-SIG2 header bits (ER-HT-SIG2 bits) correspond to the fourth OFDM symbol (ER-HT-SIG2 symbol) and a frequency permutation is applied to

the ER-HT-SIG2 (fourth) OFDM symbol, the combination of Hansen and July 2005 WWiSE provides "*the reception of the same header bits in the fourth OFDM symbol provides diversity to increase a likelihood of correctly receiving header information of the second packet type*" [3]/[11].

2. Claims 5, 13

178. For ease of discussion, I have reproduced the language of claims 5 and 13 below.

> 5. *The wireless transceiver of claim 1, wherein the wireless transceiver supports one or more wireless standards*.
>
> 13. *The method of claim 9, wherein the wireless transceiver supports one or more wireless standards*.

179. Hansen describes a "system and method for compromise greenfield preambles for **802.11n**." (INTEL-1005, ¶11; *see also, e.g.*, INTEL-1005, ¶¶27, 29-32.) July 2005 WWiSE likewise describes a proposed enhancement to existing IEEE 802.11 Wi-Fi standards, for incorporation into the 802.11n standard. (*See, e.g.*, INTEL-1005, ¶¶9, 33; INTEL-1006, 1.) Hansen's wireless transceiver further supports mixed mode access for interoperating with legacy devices that only support prior 802.11 standards such as 802.11a. (*See, e.g.*, INTEL-1005, ¶¶9, 32, 41, 61-62, 66, 111-112.) Thus, the combination of Hansen and July 2005 WWiSE

discloses that "*the wireless transceiver supports one or more wireless standards*" [5]/[13].

3. Claims 7 and 8

180. For ease of discussion, I have reproduced the language of claims 7 and 8 below.

> 7. *The wireless transceiver of claim 1, wherein the first header field indicates that* [sic] *the type of packet*.
>
> 8. *The wireless transceiver of claim 1, wherein the second header field indicates that* [sic] *the type of packet*.

181. In the combination of Hansen and July 2005 WWiSE, for example, the REXT field in SIGNAL*-N indicates whether the packet is an NR greenfield PPDU ("*first packet type*") or an ER greenfield PPDU ("*second packet type*"). (*See* INTEL-1005, 69-70.) The REXT field is present in Signal*-N field in the combination of Hansen and July 2005 WWiSE and therefore is included in both the "*first header field*" (Signal*-N) and "*second header field*" (Long Signal*-N). (*See* §IV.A.3; §§IV.B.3.a-b.)

182. The "sounding packet field" in the Signal*-N header field also "indicate[s] whether the corresponding PSDU may be utilized for closed loop calibration between a transmitter and a receiver." (INTEL-1005, ¶68.) Thus, this field, which is included in both the "*first header field*" and "*second header field*,"

indicates whether the packet is a sounding packet. (*See* §IV.B.3.a-b; INTEL-1005, ¶¶67-68.)

183. The "*first header field*" and the "*second header field*" likewise each include information describing the modulation and coding schemes to be used for the PPDU's data payload (the 6-bit "MCS" field), the number of HT-LTF symbols that the PPDU will include (the 2-bit "Number of HT-LTF" field, which also signals the number of spatial streams that will be used for MIMO communications), and the channel bandwidth to be used for the PPDU (the 1-bit "20/40 BW" field). (INTEL-1005, ¶¶64, 67-68, Figure 4c, ¶¶87, 97 (describing using HT-SIG field of Figure 4C in greenfield PPDU); §§IV.B.3.a-b.) This information also specifies the type of packet being transmitted.

184. For each of these reasons, the combination of Hansen and July 2005 WWiSE provides "*the first header field indicates that* [sic] *the type of packet*" [7] and "*the second header field indicates that* [sic] *the type of packet*" [8].

V. GROUND 2: The combination of Hansen, July 2005 WWiSE, and Choi renders claims 1-3, 5, 7-11, and 13 obvious

185. The combination of Hansen and July 2005 WWiSE renders independent claims 1 and 9 and dependent claims 2, 3, 5, 7-8, 10, 11, and 13 obvious, as I discussed in §IV.B-C. Should an argument be made that the combination of Hansen and July 2005 WWiSE does not suggest limitation [1I]/[9I]

(the order of symbol demodulation for the second packet type), this limitation is explicitly disclosed by Choi.

A. Overview of the Combination

1. Choi

186. U.S. Patent Publication 2005/0243774 to Choi, et al. was published on November 3, 2005, over 3 years before the earliest possible priority date of the ’459 patent. Choi “relates generally to a data transmission scheme for a wireless communication system” and more specifically, to “a repetition coding scheme.” (INTEL-1008, ¶1.)

187. Choi notes that “[i]t would be useful if alternate systems could be developed for communication over an extended range or in noisy environments” which Choi refers to “as extended range communication.” (INTEL-1008, ¶2.) Choi explains that although “IEEE 802.11a/g standard specifies a robust data encoding scheme that includes error correction”, a “more robust data transmission scheme at reduced data rates is required” for extended range communication. (INTEL-1008, ¶2.)

188. Choi explains that in a typical system “bits representing a set of data that is to be communicated are convolutionally encoded or otherwise transformed into values.” (INTEL-1008, ¶13.) The coded values are modulated and an OFDM

symbol transmitted. (*Id.*) To provide extended range, "each value that is sent is repeated several times by the transmitter." (*Id.*) The values are also preferably "repeated in the frequency domain." (*Id.*)

189. Choi's transmitter system with a repetition encoder placed after the output of an interleaver is illustrated in Figure 2A below. "Incoming data is convolutionally encoded by convolutional encoder 202." (INTEL-1008, ¶20.) Convolutional encoder 202 output "is interleaved by IEEE 802.11a/g interleaver 204." (*Id.*) Repetition encoder 206 "repeats the bits" and the "signal is then processed by IFFT processor 210 before being transmitted." (*Id.*)

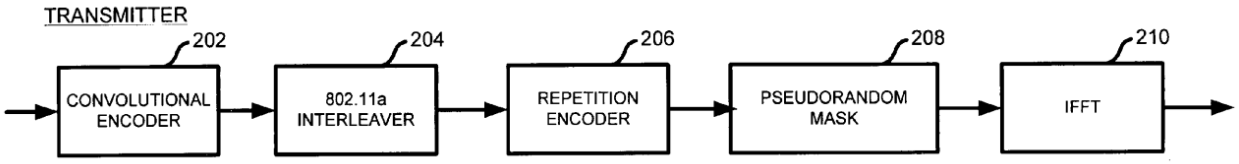

Choi, Figure 2A

190. The receiver system for receiving a signal transmitted by the transmitter of Figure 2A is illustrated in Figure 2B below. The "received signal is processed by FFT processor 220." (INTEL-1008, ¶21.) A data combiner 216 "combines the repetition encoded data into a stream of nonrepetitive data." (*Id.*) A "deinterleaver 214 deinterleaves the data and Viterbi decoder 212 determines the

most likely sequence of data that was input to the transmission system originally." (*Id.*)

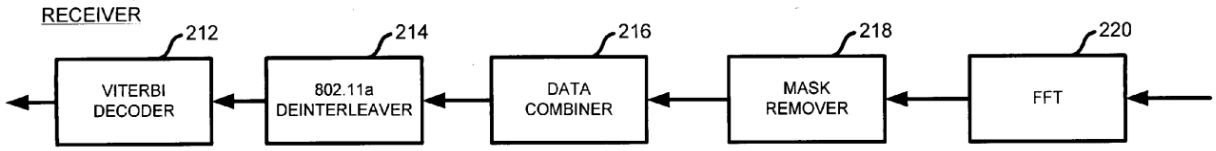

Choi, Figure 2B

191. Choi's transmitter system with a repetition encoder placed before the input of an interleaver is illustrated in Figure 3A below. "Incoming data is convolutionally encoded by convolutional encoder 302." (INTEL-1008, ¶26.) The convolutional encoder 302 output "is repetition coded by repetition encoder 304." (*Id.*) Interleaver 306 "interleaves the repetition coded bits" and the "signal is then processed by IFFT processor 310 before being transmitted." (*Id.*)

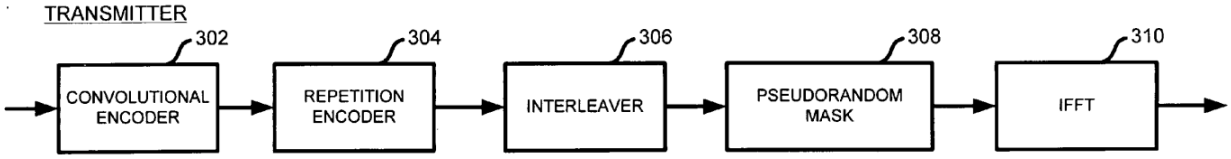

Choi, Figure 3A

192. The receiver system for receiving a signal transmitted by the transmitter of Figure 3A is illustrated in Figure 3B below. The "received signal is processed by FFT processor 320." (INTEL-1008, ¶27.) A deinterleaver 316 deinterleaves the data." (*Id.*) The data combiner 314 "combines the repetition

encoded data into a stream of nonrepetitive data and "Viterbi decoder 312 determines the most likely sequence of data that was input to the transmission system originally." (*Id.*)

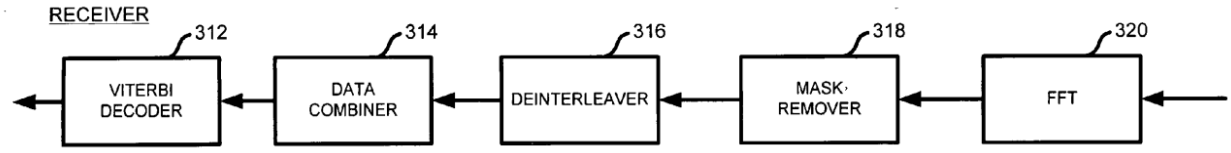

Choi, Figure 3B

2. Motivation to Combine

193. A POSITA would have been motivated to combine Choi's repetition coding teachings with the combined system of Hansen and July 2005 WWiSE. Specifically, a POSITA would have been motivated to integrate a repetition encoder into the transmission portion of Hansen's transceiver and a data combiner 314 into the reception portion of Hansen's transceiver, as taught by Choi and illustrated below. Although Choi teaches repetition of "data" generally, a POSITA would have understood that Choi's technique would be applicable to other fields carrying data such as the header. For example, U.S. Patent Publication 2007/0115802 to Yu, et al. ("Yu") describes repetition of the signal (header) field. (INTEL-1014, ¶83.) The G.9960 specification also discloses repetition of the header field, as I discussed in §IV.B.3.b. (*See* INTEL-1018, 51:1331-1358 (disclosing a repetition encoder for header field); INTEL-1001, 1:56-58 (admitting

the G.9960 specification is prior art and "should be familiar to those skilled in the art").)

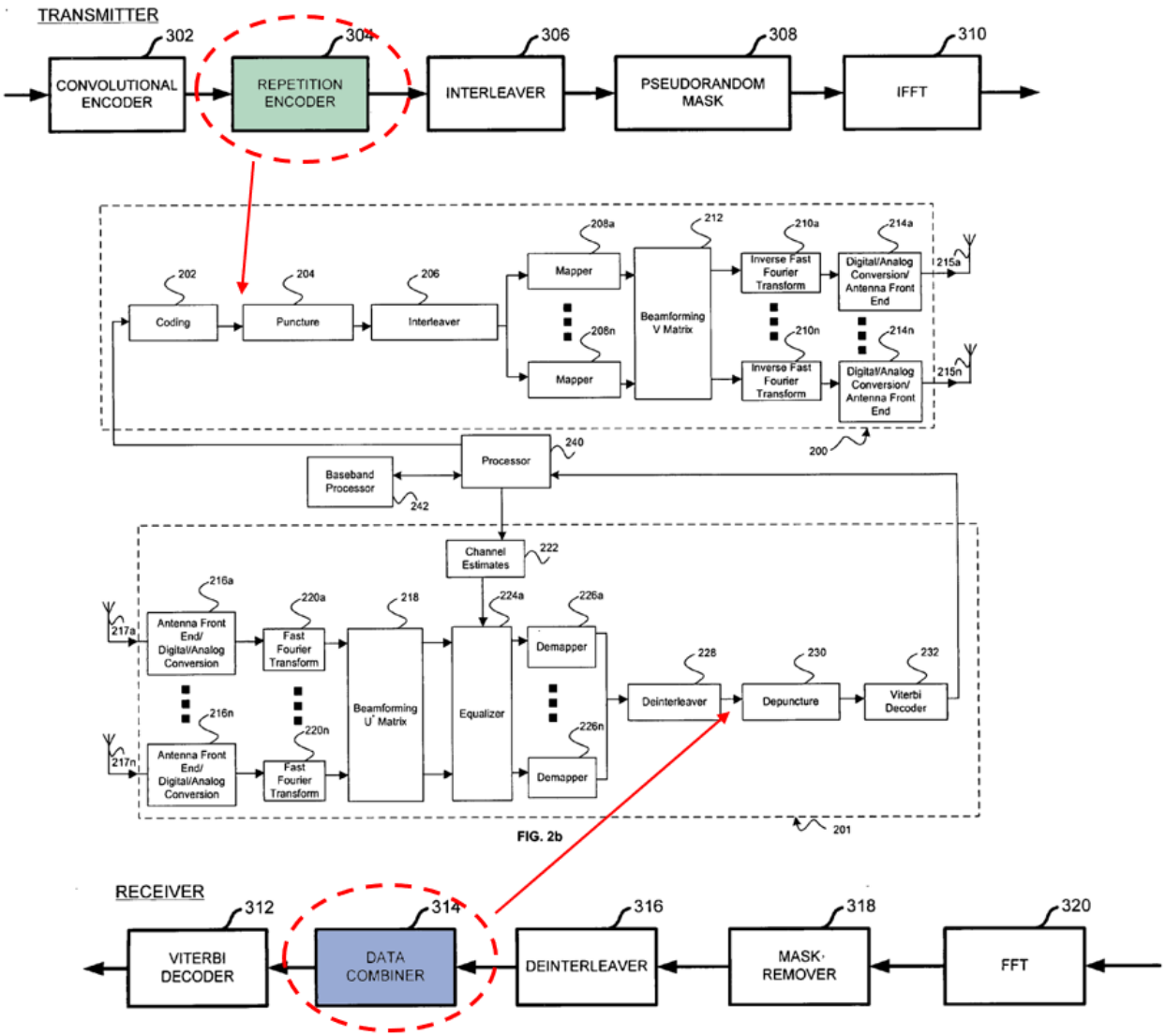

Choi, Annotated Figure 3A (top); Hansen, Annotated Figure 2B (middle), Choi, Annotated Figure 3B (bottom)

194. A POSITA would have been motivated to combine Hansen, July 2005 WWiSE, and Choi because July 2005 WWiSE sets forth specifications for

including repeating a header field in its PPDUs but does not provide details regarding how to implement such repetition in the transmission or reception portions of a transceiver. Further, the header repetition of July 2005 WWiSE occurs before the IFFTs (pre-modulation) in the transmission chain because a frequency permutation is applied to the repeated version of the header. (*See* INTEL-1006, 69:16-25; §§IV.A.2, IV.B.3.b.) Additionally, as I discussed in §IV.B.3.b, a POSITA would have been motivated to perform repetition post-coding in the combination of Hansen and July 2005 WWiSE for efficiency reasons. A POSITA would have therefore been motivated to search for references disclosing repetition coding post-coding/pre-modulation and would have been led to Choi because Choi is in the same field of endeavor as the ’459 patent, Hansen, and July 2005 WWiSE—wireless transmission and reception using OFDM.

195. Choi also expressly motivates the combination. First, Choi discloses that its disclosures are applicable to IEEE 802.11 standards, including 802.11a, b, g, and a/g. (*See* INTEL-1008, ¶¶2, 17.) Second, Choi explicitly suggests the use of its repetition coding in systems having extended range capabilities, such as the system in the combination of Hansen and July 2005 WWiSE. (INTEL-1008, ¶¶2, 15; *See* §IV.A.3.) Third, Choi teaches that its repetition coding is beneficial for communication “in noisy environments”, which is a common concern for WLAN

systems. (INTEL-1008, ¶2.) Each of these suggestions would have motivated a POSITA to combine Choi's repetition coding with Hansen and July 2005 WWiSE.

196. Finally, the combination is simply the combination of prior art elements (Hansen's "compromise" greenfield PPDU, WWiSE's ER capabilities, and Choi's repetition encoding) according to known methods to yield predictable results. The combination integrates Choi's repetition encoder in the transmission chain after coding and prior to interleaving. A POSITA would have understood how to integrate the repetition encoder in the transmission chain because transceiver design includes and incorporates the integration of other components such as puncturing between the coder and interleaver. (*See, e.g.,* INTEL-1005, Figure 2b.) The results of the combination would have been predictable and there would be a reasonable expectation of success in the combination because post-coding repetition encoders were proposed in other standards including G.9960. (*See* INTEL-1018, 51:1331-1358 (disclosing a repetition encoder for header field).)

B. Independent Claim 1

197. The combination of Hansen, July 2005 WWiSE, and Choi discloses the "*demodulator further operable to demodulate a first OFDM symbol followed*

by a second OFDM symbol followed by a third OFDM symbol followed by a fourth OFDM symbol" [1I].

198. In the combination of Hansen, July 2005, and Choi, coding block 202 receives the Signal*-N header bits, representing the "*first set of header bits*" (HT-SIG1) in the "*first part of the second header field*" and the "*third set of header bits*" (HT-SIG2) in the "*third part of the second header field*." (*See, e.g.,* §IV.B.3.b.) The output of coding block 202 is the coded HT-SIG1 followed by the coded HT-SIG2. As I discussed in §IV.B.3.b, coded HT-SIG1 corresponds to the HT-SIG1 header bits and the transmitted HT-SIG1 symbol and coded HT-SIG2 corresponds to the HT-SIG2 header bits and the transmitted HT-SIG2 symbol.

199. The coded HT-SIG1, output first, is provided to the repetition encoder where it is duplicated to generate a second instance of coded HT-SIG1. (*See* INTEL-1008, ¶¶26, 18 (repetition applied to a coded block corresponding to an OFDM symbol).) The coded HT-SIG2 is next provided to the repetition encoder where it is duplicated to generate a second instance of coded HT-SIG2. (*See* INTEL-1008, ¶26.) The coded and repeated blocks sequentially traverse the transmission chain, resulting in the following order of transmitted symbols: HT-SIG1 symbol, ER-HT-SIG1 symbol, HT-SIG2 symbol, and ER-HT-SIG2 symbol. (*See* INTEL-1008, ¶26.)

200. Because the order of transmission is the same as the order of reception, The combination of Hansen, July 2005 WWiSE, and Choi discloses "*demodulator further operable to demodulate a first OFDM symbol followed by a second OFDM symbol followed by a third OFDM symbol followed by a fourth OFDM symbol*" [1I].

201. For the reasons I discussed in §IV.B the combination of Hansen, July 2005 WWiSE, and Choi disclose the remaining limitations of independent claim 1.

202. The combination of Hansen, July 2005 WWiSE, and Choi renders independent claim 1 obvious.

C. Independent Claim 9

203. As I discussed in §IV.C, claim 9 recites substantially the same limitations as claim 1. For the reasons I discussed in §V.B for limitation [1J] and the reasons discussed in §IV.B for the remaining terms, the combination of Hansen, July 2005 WWiSE, and Choi renders claim 9 obvious.

D. Dependent Claims

204. For the reasons discussed in §IV.D, the combination of Hansen, July 2005 WWiSE, and Choi renders claims 2, 3, 5, 7, 8, 10, 11, and 13 obvious.

VI. Conclusion

205. In signing this declaration, I recognize that the declaration will be filed as evidence in a contested case before the Patent Trial and Appeal Board of the United States Patent and Trademark Office. I also recognize that I may be subject to cross-examination in the case and that cross-examination will take place within the United States. If cross-examination is required of me, I will appear for cross-examination within the United States during the time allotted for cross-examination.

I hereby declare that all statements made herein of my own knowledge are true and that all statements made on information and belief are believed to be true; and further that these statements were made with the knowledge that willful false statements and the like so made are punishable by fine or imprisonment, or both, under Section 1001 of Title 18 of the United States Code.

Executed this 30th day of June in State College, PA

Respectfully submitted,

Thomas LaPorta, Ph.D

EXHIBIT LIST

Exhibit	Reference
1001	U.S. Patent 10,554,459
1002	File History of the ’459 patent
1003	Declaration of Thomas LaPorta, Ph.D. in Support of *Inter Partes* Review of U.S. Patent 10,554,459
1004	Curriculum Vitae of Dr. Thomas LaPorta
1005	U.S. Patent Publication 2006/0182017 to Hansen, et al (“Hansen”)
1006	IEEE 802.11-05/0149r5, “WWiSE Proposal: High Throughput Extension to the 802.11 Standard” to Kose, et al, uploaded and publicly available on July 9, 2005 (“July 2005 WWiSE”)
1007	Declaration of James L. Lansford, Ph.D.
1008	U.S. Patent Publication 2005/0243774 to Choi, et al (“Choi”)
1009	U.S. Provisional Application 61/235,909 (“the ’459 Provisional”)
1010	U.S. Patent 8,737,189 to Hansen, et al (“Hansen Patent’)
1011	U.S. Provisional Application 60/653,429 (“Hansen Provisional”)
1012	IEEE 802.11-04/0889r3, “TGn Sync Proposal Technical Specification” to Mujtaba, uploaded and publicly available on January 20, 2005
1013	IEEE 802.11-04/0886r6, “WWiSE Proposal: High Throughput Extension to the 802.11 Standard” to Hansen, et al, uploaded and publicly available on January 6, 2005 (“January 2005 WWiSE”)
1014	U.S. Patent Publication 2007/0115802 to Yu (“Yu”)
1015	IEEE Std. 802.11a-1999, “Part 11: Wireless LAN Medium Access Control (MAC) and Physical Layer (PHY) Specifications: High-Speed Physical Layer in the 5 GHz Band”, approved September 16, 1999 (“802.11a”)
1016	Declaration of David Ringle for 802.11a-1999 - IEEE Standard for Telecommunications and Information Exchange Between Systems – LAN/MAN Specific Requirements - Part 11: Wireless Medium

Exhibit	Reference
	Access Control (MAC) and physical layer (PHY) specifications: High-Speed Physical Layer in the 5 GHz Band, date of publication December 30, 1999
1017	IEEE Std. 802.11n-2009, "Part 11: Wireless LAN Medium Access Control (MAC) and Physical Layer (PHY) Specifications: Amendment 5: Enhancements for Higher Throughput" ("802.11n")
1018	Editor for G.9960, "ITU-T Recommendation G.9960 Next Generation Wire-line Based Home Networking Transceivers-Foundation", ITU-T SG15/Q4, January 2009, as filed in file wrapper of the '459 patent
1019	Intellon Corporation, "G.hn: Extended PHY frame header," ITU-T SG15/Q4, 09XC-119, Xian, China, July 2009, as filed in file wrapper of the '459 patent
1020	CopperGate Communication, "G.hn: Using Two Symbols for the Header of a PHY frame on Coax," ITU-T SG15/Q4, 09XC-100, Xian, China July 2009, as filed in file wrapper of the '459 patent
1021	Lörincz, et al, "Physical Layer Analysis of Emerging IEEE 802.11n WLAN Standard", 8th International Conference Advanced Communication Technology (February 20-22, 2006); added to IEEE *Xplore* May 8, 2006
1022	Van Nee, et al., "OFDM for Wireless Multimedia Communications", Artech House Publishers (2000)
1023	Bahai, et al., "Multi-Carrier Digital Communications Theory and Applications of OFDM", Springer (2004)
1024	Tse, et al., "Fundamentals of Wireless Communication", Cambridge University (2005)
1025	Heiskala, et al., "OFDM Wireless LANs: A Theoretical and Practical Guide", Sams Publishing (2002)
1026	RESERVED
1027	Cox, "Stage Set for Compromise on IEEE High-Speed Wireless", Network World (March 21, 2005)

Exhibit	Reference
1028	Reardon, "New Wi-Fi Standard Takes the Slow Road", CNET (May 20, 2005)
1029	Mujtaba, et al., IEEE 802.11-05/786r0, "TGn Sync, WWiSE, and Mitmot Closing Report", presentation submission, submitted and publicly available on July 21, 2005.
1030	Coffey, IEEE 802.11-05/0737r0, "WWiSE IEEE 802.11n Proposal", presentation submission, submitted and publicly available on July 9, 2005
1031	Gast, "802.11 Wireless Networks: The Definitive Guide", O'Reilly (2002)
1032	Infringement Contents with Appendices served in *AX Wireless LLC v. Dell Inc. et al*., and *AX Wireless LLC v. HP Inc.*, U.S. District Court Eastern District of Texas, Case Numbers 2:22-cv-00277 and 2:22-cv-00279, November 3, 2022
1033	U.S. Patent 7,415,074 (Appendix C to INTEL-1007)
1034	Stephens, "802.11 'Decrypted'", ACM SIGCOMM Computer Communication Review, Vol. 35, No. 2 (April 2005) (Appendix D to Lansford Declaration, INTEL-1007).
1035	Kay, "Sidebar: The Battle for 11n", ComputerWorld (March 13, 2006)
1036	"'WWiSE' Consortium, Motorola Team on Proposal for IEEE 802.11n", Wireless Design Online (February 24, 2005)
1037	WWiSE Industry Organization Press Release, "'WWiSE' Consortium and Motorola Team to Offer Enhanced Proposal for IEEE 802.11n" (February 24, 2005); *archived* on April 6, 2005 at https://web.archive.org/web/20050406073808/http://www.wwise.org/pressreleasefeb23.htm.
1038	IEEE 802.11-04/422r4, "New Participant Orientation", presentation submission (July 2004) (Appendix A to Lansford Declaration, INTEL-1007)

Exhibit	Reference
1039	IEEE 802.11-04/736r1, "Approved Minutes of the IEEE P802.11 Full Working Group", Minutes (July 2004) (Appendix B to Lansford Declaration, INTEL-1007)
1040	O'Hara, The IEEE 802.11 Handbook, Standards Information Network, IEEE Press, 1999