Filed on behalf of: AX Wireless, LLC

UNITED STATES PATENT AND TRADEMARK OFFICE

BEFORE THE PATENT TRIAL AND APPEAL BOARD

INTEL CORPORATION,
Petitioner,

v.

AX WIRELESS, LLC,
Patent Owner.

IPR2023-01135, -1136, -1137, -1138, -1139, -1140
Patents 9,973,361; 10,079,707; 10,291,449; 10,554,459, 10,917,272

**DECLARATION OF ZYGMUNT HAAS, PH.D.**
**IN SUPPORT OF PATENT OWNER'S**
**PRELIMINARY RESPONSE**

**AX Wireless, LLC**
**Exhibit AXW-2001**
**Intel v. AX Wireless**
**IPR2023-01139**

AXW-2001-001

**Table of Contents**

I. Introduction And Qualifications .....3

II. Summary Of Materials Reviewed And Considered .....7

III. Understanding of Legal Principles.....12

IV. Summary of the Patents (INTEL-1001).....16

A. Description of the '361, '707, '449, '459, and '272 Patents..16
B. Person of Ordinary Skill in the Art .....21
C. Claim Construction .....22

V. Relevant Technical Background.....22

A. Networking Overview .....24
B. Modulation, Coding, and Error Correction .....27
C. 802.11a PHY Framing.....34
D. The Wireless Medium and 802.11 .....38
E. Diversity and MIMO .....47
F. The Hidden Terminal Problem .....51
G. TGn and 802.11n.....53
1. TGn Sync Proposals .....55
2. WWiSE Proposals and July 2005 WWiSE (INTEL-1006).....59
3. IEEE 802.11n .....69

VI. Overview of the Art and Asserted Combinations.....69

A. Hansen (INTEL-1005) .....69
B. July 2005 WWiSE (INTEL-1006).....81
C. Choi (INTEL-1008).....81
D. The Combination of Hansen and July 2005 WWiSE .....82

VII. A POSA Would Have Not Combined Hansen and July 2005 WWiSE as Proposed in the Petition.....87

A. Hansen and July 2005 WWiSE Have Different Range Capabilities .....88

B. Repeated Header Bits Alone Is An Incomplete Version of July 2005 WWiSE's Extended Range Mode ..... 96
C. The Petition's REXT Bit Implementation Is Flawed ..... 100
D. In Light of the Above Issues, a POSA Would Not Be Motivated to Combine Hansen and July 2005 WWiSE ..... 106

VIII. A POSA Would Not Combine Hansen, July 2005 WWiSE, and Choi as Proposed in the Petition ..... 117

IX. Conclusion ..... 119

## I. Introduction And Qualifications

1. I have been retained by AX Wireless, LLC ("AXW" or "Patent Owner") to provide opinions concerning the validity of U.S. Patent Nos. 9,973,361 (the "'361 patent"); 10,079,707 (the "'707 patent"); 10,291,449 (the "'449 patent"); 10,554,459 (the "'459 patent"); 10,917,272 (the "'272 patent").

2. My complete qualifications and professional experience are described in my *Curriculum Vitae*, a copy of which is attached to this declaration as AXW-2002. The following is a brief summary of my relevant qualifications and professional experience.

3. I am a Professor and Distinguished Chair in Computer Science at the University of Texas in Dallas. I am also a Professor Emeritus at the School of Electrical and Computer Engineering at Cornell University. In addition, I have provided technical consulting services in intellectual property matters, during which I have written expert reports and provided deposition and trial testimony involving, among others, wireless communication technologies.

4. My academic credentials include a Bachelor of Science Degree in Electrical Engineering, summa cum laude, from Technion (IIT), Israel, in 1979 and a Master of Science Degree in Electrical Engineering, summa cum laude, from Tel Aviv University, Israel, in 1985. I subsequently authored the thesis titled "Packet

Switching in Fiber-Optic Networks" as part of earning my Ph.D. in Electrical Engineering from Stanford University in 1988.

5. I am being compensated at the rate of $525 per hour with reimbursement for actual expenses, for my work related to this IPR. My compensation is not dependent on, and in no way affects, the substance of my statements in this Declaration.

6. I have worked or consulted for about 35 years in the fields of Electrical Engineering and Computer Science. My primary focus has been on communication and networking systems, with an emphasis on wireless communication networks. I have authored and co-authored numerous technical papers and book chapters related to wireless communication networks. I hold over twenty patents in the fields of high-speed networking, wireless networks, and optical communication/switching. My employment history following my graduation from Stanford University began at the Network Research Department of AT&T Bell Laboratories in 1988. At AT&T Bell Laboratories, I pursued research on wireless communications, mobility management, fast protocols, optical networks, and optical switching. During my tenure at AT&T, I also worked for the AT&T Wireless Center of Excellence, where I investigated various aspects of wireless and mobile networks.

7. In 1995, I joined the faculty of the School of Electrical & Computer Engineering at Cornell University, and with time I was promoted to a Full Tenured Professor. At Cornell, I headed the Wireless Networks Lab, a research group with extensive contributions in the area of wireless communication systems and networks. In 2013, I retired from Cornell University with the title of Emeritus Professor, and I joined the Computer Science Department at the University of Texas at Dallas with the title of Professor and Distinguished Chair in Computer Science. At Cornell University and at the University of Texas, I have taught dozens of courses related to computer networking and wireless networks/communications.

8. My research and teaching include key wireless technologies such as, for example, MIMO, beamforming, and diversity schemes, as well as networking protocols such as the IEEE 802.11.

9. I am a member of the Institute of Electrical and Electronic Engineers (IEEE) and the Association for Computing Machinery (ACM). In 2007, I was elevated to an IEEE Fellow, and in 2022, I was elevated to an ACM Fellow, both well-known distinctions. For example, the total number of IEEE Fellows which are selected in any given year does not exceed 0.1% of the total number of voting members of IEEE. With respect to the ACM Fellow grade, ACM states that "ACM's most prestigious member grade recognizes the top 1% of ACM members

for their outstanding accomplishments in computing and information technology and/or outstanding service to ACM and the larger computing community." *See* https://awards.acm.org/fellows.

10. I have delivered numerous tutorials at major IEEE and ACM conferences. I served as editor of several publications including the IEEE Transactions on Networking, the IEEE Transactions on Wireless Communications, the IEEE Communications Magazine, the Springer "Wireless Networks" journal, the Elsevier "Ad Hoc Networks" journal, the "Journal of High Speed Networks," and the Wiley "Wireless Communications and Mobile Computing" journal. I was also a guest editor of IEEE Journal on Selected Areas in Communications for the issues on "Gigabit Networks," "Mobile Computing Networks," and "Ad-Hoc Networks." Finally, I served as the Chair of the IEEE Technical Committee on Personal Communications (TCPC), today known as Wireless Communications Technical Committee (WTC). I have also served on numerous committees for the benefit of the scientific community, such as Technical Program Committees of conferences in the areas of wireless communications and wireless networks.

11. I have received several awards in the field of wireless communications and network technology. In 2016, I received the IEEE ComSoc AHSN Recognition Award "for outstanding contributions to securing ad hoc and

sensor networks." In 2012, I received the IEEE ComSoc WTC Recognition Award, which recognizes individuals "for outstanding technical contributions in the field for their service to the scientific and engineering communities." In 2021, I received the "Best Paper Award" for coauthoring the paper "Engineering a Network in the Sky" from the 35th International Conference on Information Networking, (ICOIN21). In 2012, I received the "Best Paper Award for co-authoring "Collaborating with Correlation for Energy Efficient WSN" directed at Wireless Sensor Networking. I previously received the "Best Paper Award" for co-authoring "Optimal Resource Allocation for UWB Wireless Ad Hoc Networks" directed at personal indoor and mobile radio communications. Finally, in 2003, I received the "Highly Commended Paper Award" for co-authoring "Performance Evaluation of the Modified IEEE 802.11 MAC for Multi-Channel Multi-Hop Ad Hoc Network," directed at advanced information networking and applications.

12. Additional information regarding my education, technical experience and publications, including a list of the U.S. patents of which I am an inventor/coinventor, is included in my *Curriculum Vitae*.

## II. Summary Of Materials Reviewed And Considered

13. My opinions contained in this Declaration are based on the documents I reviewed as part of my work on this case and my knowledge, experience, and

professional judgment. In forming the opinions expressed in this Declaration, I reviewed the following documents, adopting the naming conventions of Intel (the table below, as well as the naming and numbering of the documents have been provided to me by Counsel)[1]:

| Ex. | Description |
|---|---|
| 1001 | U.S. Patent No. 9,973,361 ("'361 patent") |
| 1001 | U.S. Patent No. 10,079,707 ("'707 patent") |
| 1001 | U.S. Patent No. 10,291,449 ("'449 patent") |
| 1001 | U.S. Patent No. 10,554,459 ("'459 patent") |
| 1001 | U.S. Patent No. 10,917,272 ("'272 patent") |
| 1002 | File History of the '361 patent |
| 1002 | File History of the '707 patent |
| 1002 | File History of the '449 patent |

[1] All of Petitioner Intel Corporation's ("Intel") exhibits, except the patent-at-issue (INTEL-1001), the file history (INTEL-1002), and Declaration of Thomas LaPorta (INTEL-1003) are the same across all of the petitions I am addressing herein. Therefore, my citations to those exhibits should apply to all of the proceedings addressed (IPR2023-01135, -01136, -01137, -01138, -01139, -01140). My citations to the other exhibits, such as the patents-at-issue, will identify the relevant proceeding number within the parallel string citation, e.g. "1135-INTEL-1001."

| Ex. | Description |
|---|---|
| 1002 | File History of the '459 patent |
| 1002 | File History of the '272 patent |
| 1003 | Declaration of Thomas LaPorta, Ph.D. in Support of Inter Partes Review of U.S. Patent 9,973,361 |
| 1003 | Declaration of Thomas LaPorta, Ph.D. in Support of Inter Partes Review of U.S. Patent 10,079,707 |
| 1003 | Declaration of Thomas LaPorta, Ph.D. in Support of Inter Partes Review of U.S. Patent 10,291,449 |
| 1003 | Declaration of Thomas LaPorta, Ph.D. in Support of Inter Partes Review of U.S. Patent 10,554,459 |
| 1003 | Declaration of Thomas LaPorta, Ph.D. in Support of Inter Partes Review of U.S. Patent 10,917,272 |
| 1005 | U.S. Patent Publication 2006/0182017 to Hansen, et al ("Hansen") |
| 1006 | IEEE 802.11-05/0149r5, "WWiSE Proposal: High Throughput Extension to the 802.11 Standard" to Kose, et al, uploaded and publicly available on July 9, 2005 ("July 2005 WWiSE") |
| 1007 | Declaration of James L. Lansford, Ph.D. |
| 1008 | U.S. Patent Publication 2005/0243774 to Choi, et al ("Choi") |
| 1009 | U.S. Provisional Application 61/235,909 |
| 1010 | U.S. Patent 8,737,189 to Hansen, et al ("Hansen Patent') |
| 1011 | U.S. Provisional Application 60/653,429 ("Hansen Provisional") |
| 1012 | IEEE 802.11-04/0889r3, "TGn Sync Proposal Technical Specification" to Mujtaba, uploaded and publicly available on January 20, 2005 |
| 1013 | IEEE 802.11-04/0886r6, "WWiSE Proposal: High Throughput Extension to the 802.11 Standard" to Hansen, et al, uploaded and publicly available on January 6, 2005 ("January 2005 WWiSE") |
| 1014 | U.S. Patent Publication 2007/0115802 to Yu ("Yu") |

| Ex. | Description |
|---|---|
| 1015 | IEEE Std. 802.11a-1999, "Part 11: Wireless LAN Medium Access Control (MAC) and Physical Layer (PHY) Specifications: High-Speed Physical Layer in the 5 GHz Band", approved September 16, 1999 ("802.11a") |
| 1017 | IEEE Std. 802.11n-2009, "Part 11: Wireless LAN Medium Access Control (MAC) and Physical Layer (PHY) Specifications: Amendment 5: Enhancements for Higher Throughput" ("802.11n") |
| 1018 | Editor for G.9960, "ITU-T Recommendation G.9960 Next Generation Wire-line Based Home Networking Transceivers-Foundation", ITU-T SG15/Q4, January 2009, as filed in file wrapper of the '361 patent |
| 1023 | Bahai, et al., "Multi-Carrier Digital Communications Theory and Applications of OFDM", Springer (2004) |
| 1024 | Tse, et al., "Fundamentals of Wireless Communication", Cambridge University (2005) |
| 1025 | Heiskala, et al., "OFDM Wireless LANs: A Theoretical and Practical Guide", Sams Publishing (2002) |
| 1030 | Coffey, IEEE 802.11-05/0737r0, "WWiSE IEEE 802.11n Proposal", presentation submission, submitted and publicly available on July 9, 2005 |
| 1037 | WWiSE Industry Organization Press Release, "'WWiSE' Consortium and Motorola Team to Offer Enhanced Proposal for IEEE 802.11n" (February 24, 2005); archived on April 6, 2005 at https://web.archive.org/web/20050406073808/http://www.WWiSE.org / pressreleasefeb23.htm. |
| 1040 | O'Hara, The IEEE 802.11 Handbook, Standards Information Network, IEEE Press, 1999 |
| 2014 | Gérald Chouinard, Bringing broadband access to rural and remote areas: The Canadian Experience, ITU News (commem. ed. 3) (Apr. 2006) ("AXW-2014" or "ITU News") |

| Ex. | Description |
|---|---|
| 2015 | Matthew S. Gast, 802.11 Wireless Network: The Definitive Guide (2d ed. 2005) ("AXW-2015" or "Gast") |
| 2016 | Syed Aon Mujtaba, TGn Sync Response to Questions (Doc. No. IEEE 802.11-05/182r2) (Mar. 16, 2005), https://view.officeapps.live.com/op/view.aspx?src=https%3A%2F%2Fmentor.ieee.org%2F802.11%2Fdcn%2F05%2F11-05-0182-02-000n-tgnsync-response-to-atlanta-questions.ppt&wdOrigin=BROWSELINK ("AXW-2016") |
| 2025 | R. Kennedy, Amendment to IEEE Standard 802.11-2007 (Project No. P802.11af): Standard for Information Technology - Telecommunications and Information Exchange Between Systems - Local and Metropolitan Area Networks - Specific Requirements - Part 11: Wireless LAN Medium Access Control (MAC) and Physical Layer (PHY) Specifications; Amendment: TV White Spaces Operation (PAR Request Oct. 2, 2009; PAR Approval Dec. 9, 2009) ("AXW-2025") |
| 2026 | Bruce Kraemer, Amendment to IEEE Standard 802.11-2007 (Project No. P802.11ah): Standard for Information Technology - Telecommunications and Information Exchange Between Systems - Local and Metropolitan Area Networks - Specific Requirements - Part 11: Wireless LAN Medium Access Control (MAC) and Physical Layer (PHY) Specifications; Amendment: Sub 1 GHz License-Exempt Operation (PAR Request July 26, 2010; PAR Approval Sept. 30, 2010) ("AXW-2026") |
| 2027 | Xuemei Ouyang et al., Optimal Antenna Diversity Combining for IEEE 802.11A System, 48 IEEE Transactions Consumer Elecs. 738 (Aug. 2002) ("AXW-2027") |

| Ex. | Description |
|---|---|
| 2028 | Cenk Kose & Bruce Edwards, WWiSE Proposal: High Throughput Extension to the 802.11 Standard (Doc. No. IEEE 802.11-04/0886r6) (Jan. 6, 2005), https://www.google.com/url?sa=t&rct=j&q=&esrc=s&source=web&cd=&ved=2ahUKEwjJq5fyur-CAxUROUQIHan7D4IQFnoECBkQAQ&url=https%3A%2F%2Fmentor.ieee.org%2F802.11%2Fdcn%2F05%2F11-05-0149-00-000n-wwise-proposal-high-throughput-extension-to-802-11-standard.doc&usg=AOvVaw2ryBNHlH79Ugg8pE4IzPVE&opi=89978449 ("AXW-2028" or "March 2005 WWiSE Proposal") |
| 2029 | Mohammad Hossein Manshaei & Thierry Turletti, Simulation-Based Performance Analysis of 802.11a Wireless LAN, Proc. Int'l Symp. Telecomms. 758 (Aug. 2003) ("AXW-2029") |
| 2030 | IEEE, IEEE P802.11 – Task Group N – Meeting Update: Status of Project IEEE 802.11n: Standard for Enhancements for Higher Throughput, https://www.ieee802.org/11/Reports/tgn_update.htm (printed 11/10/2023) ("AXW-2030") |

## III. Understanding of Legal Principles

14. I am not an attorney, and I do not opine on matters of law. In preparing this Declaration, I have been informed by Counsel about certain aspects of the law that are relevant to my analysis and opinions, as set forth below.

15. I have been informed by Counsel that the claims of a patent define the patented invention.

16. I have been informed by Counsel that an issued patent is presumed valid.

17. I have been informed by Counsel that the validity analysis is a two-step process. First, the patent claims are construed to ascertain their proper scope. Second, the construed claims are compared to the identified prior art to determine if the claims are valid over the prior art.

18. I have been informed by Counsel that patent claims can be deemed invalid if the differences between the claimed subject matter and the prior art are such that the subject matter as a whole would have been obvious at the time the invention was made to a person having ordinary skill in the pertinent art ("POSA"). While such conclusions are often based on more than one piece of prior art, only one is required. It is not sufficient that a collection of prior art references merely recites the various elements of a challenged patent claim. Rather, as I have been informed by Counsel, the prior art must present the elements in a manner that is consistent with their arrangement or use in the challenged claims. I have been informed by Counsel that obviousness cannot be based on the hindsight combination of components selectively culled from the prior art.

19. I have been informed by Counsel that a POSA is a hypothetical person who is presumed to have known the relevant art at the time that the invention was made. I have been informed by Counsel that the condition "at the time the invention was made" is imposed to rule out impermissible hindsight. I also have

been informed by Counsel that an expert is to analyze the prior art from the perspective of a POSA and not simply to provide an expert's own personal conclusions.

20. I have also been informed by Counsel that an obviousness determination includes several factual inquiries, including (1) determining the scope and content of the prior art; (2) ascertaining the differences between the claimed invention and the prior art; (3) resolving the level of ordinary skill in the pertinent art; and (4) taking into consideration any objective indicia of nonobviousness.

21. I have been informed by Counsel that obviousness must be determined as of the date of the invention (i.e., the effective filing date or priority date of the patent). Thus, in considering the reason or motivation to combine references, it is essential to avoid using hindsight. For example, the problem examined when considering obviousness is the general problem that confronted the inventor before the invention was made, not the specific problem solved by the invention. Defining the problem in terms of its solution reveals improper hindsight in the selection of the prior art relevant to obviousness. Further, an overly narrow statement of the problem can represent a form of hindsight, because often the inventive contribution lies in defining the problem in a new revelatory way.

Similarly, an assertion that a POSA could combine the references, rather than that they would have been motivated to do so, is an impermissible form of hindsight. Moreover, knowledge of a problem and motivation to solve it are entirely different from the motivation to combine particular references to reach the particular claimed invention.

22. I have been informed by Counsel that whether a POSA would be motivated to make a combination includes whether he/she would select particular references in order to combine their elements.

23. I have been informed by Counsel that the analysis of the motivation to combine should be explicit. Additionally, it must include articulated reasoning with rational underpinnings to support the conclusion of obviousness. Providing a full explanation of the motivation to combine the references and the reasonable expectation of success is a necessary component of the obviousness inquiry, as invention in most, if not all, instances rely upon building blocks long since uncovered, and claimed discoveries almost of necessity will be combinations of what, in some sense, was already known. However, conclusory statements fail to adequately explain to a lay person why a POSA would have a motivation to combine the potential prior art references and therefore do not provide evidentiary value.

24. I have been informed by Counsel that common sense, common wisdom, and common knowledge may be used to support a motivation to combine, so long as the use of common sense in the analysis is explained with sufficient reasoning. But common sense can only be used to supply a limitation missing from the prior art where the technology is unusually simple and straightforward.

25. I also have been informed by Counsel that evidence suggesting reasons to combine cannot be viewed apart from evidence suggesting reasons not to combine. In analyzing motivation, both advantages and disadvantages must be considered. Teaching away, for example, is a statement in the prior art that either (i) discourages one from following the path of the claimed invention, or (ii) encourages one to follow a path that diverges from the path of the claimed invention. The concept of teaching away bears directly on whether there was a reason to combine prior art. Known disadvantages in prior art technology or devices which would naturally discourage a search for new inventions may also be taken into account in determining obviousness.

## IV. Summary of the Patents (INTEL-1001)

### A. Description of the '361, '707, '449, '459, and '272 Patents

26. The '361, '707, '449, '459, and '272 patents relate to improving communications in wireless Orthogonal Frequency Division Multicarrier ("OFDM") networks; they share substantially the same specification. The patents

claim priority to a provisional application filed on August 21, 2009 (INTEL-1009), and issued on May 15, 2018. I have been instructed by Counsel to use August 21, 2009 as the priority date for these patents.

27. The Background section of the specification grounds the description in frame- or packet-based communication systems using Orthogonal Frequency Division Multiplexing (OFDM). *See* '361 patent at 1:30-37; '707 patent at 1:32-39; '449 patent at 1:34-41; '459 patent at 1:36-43; '272 patent at 1:38-45. It notes that a packet generally consists of a preamble, header, and payload portions. *See* '361 patent at 1:37-39; '707 patent at 1:39-41; '449 patent at 1:41-43; '459 patent at 1:43-45; '272 patent at 1:45-47. The specification identifies exemplary systems in this category that include "IEEE 802.11 (Wireless LAN), IEEE 802.16 (WiMAX), and ITU G.9960 (G.hn)." '361 patent at 1:39-41; '707 patent at 1:42-44; '449 patent at 1:43-45; '459 patent at 1:45-47; '272 patent at 1:47-49; *see also* '361 patent at 4:29-50 (further identifying DSL, ADSL, xDSL, VDSL, MOCA, Homeplug, and IEEE 802.3, along with others); '707 patent at 4:32-53; '449 patent at 4:33-54; '459 patent at 4:33-54; '272 patent at 4:38-59. A POSA would have understood that these various protocols and standards would generally have different information to include in headers and different requirements for reliable reception of header information, which would drive their implementation. *See,*

*e.g.*, '361 patent at 1:30-67, 4:14-50; '707 patent at 1:32-2:3, 4:17-53; '449 patent at 1:34-2:4, 4:18-54; '459 patent at 1:36-2:6, 4:18-54; '272 patent at 1:38-2:8, 4:23-59.

28. The '361, '707, '449, '459, and '272 patents generally describe a flexible approach to the number of OFDM symbols carrying header information and the number of repeated OFDM symbols per header symbol. *See, e.g.*, '361 patent at Title, 2:10-56; '707 patent at Title, 2:13-59; '449 patent at Title, 2:14-60; '459 patent at Title, 2:16-62; '272 patent at Title, 2:18-64. Figure 1 of the patents is provided to show "exemplary header repetition schemes" and is reproduced below. '361 patent at 3:64; '707 patent at 3:67; '449 patent at 4:1; '459 patent at 4:1; '272 patent at 4:6. The patents use "D" to refer to the number of times a header symbol is repeated, and "H" to refer to the number header symbols containing different information. *See* '361 patent at 2:24-37, 5:46-6:9, Fig. 1; '707 patent at 2:27-40, 5:49-6:12, Fig. 1; '449 patent at 2:28-41, 5:50-6:13, Fig. 1; '459 patent at 2:30-43, 5:50-6:13, Fig. 1; '272 patent at 2:32-45, 5:56-6:19, Fig. 1. In each example, the header field is preceded by a preamble and followed by a payload portion. *See* '361 patent at 5:46-6:9, Fig. 1; '707 patent at 5:49-6:12, Fig. 1; '449 patent at 5:50-6:13, Fig. 1; '459 patent at 5:50-6:13, Fig. 1; '272 patent at 5:56-6:19, Fig. 1.

29. In the first row of Figure 1, D and H are both set to 1, and a single "Header" field is included. In the second row, H is set to 1 but D is set to 2. This results in the "Header" field being repeated. In the third row, D is set to 1, but H is now set to 2. This results in the header field extending to two symbols, one denoted "Header" the other denoted "Header Ext," and both are included. In the fourth row, D and H are both set to 2, resulting in the "Header" symbol being repeated, followed by the "Header Ext" symbol being repeated. In the fifth row, D and H are again both set to 2 and the same result as the fourth row occurs. The fifth row provides an example showing that the "Header" and "Header Ext" not only contain different information, but can contain a different number of information bits in each symbol. *See* '361 patent at 5:60-6:9; '707 patent at 5:63-6:12; '449 patent at 5:64-6:13; '459 patent at 5:64-6:13; '272 patent at 6:3-19.

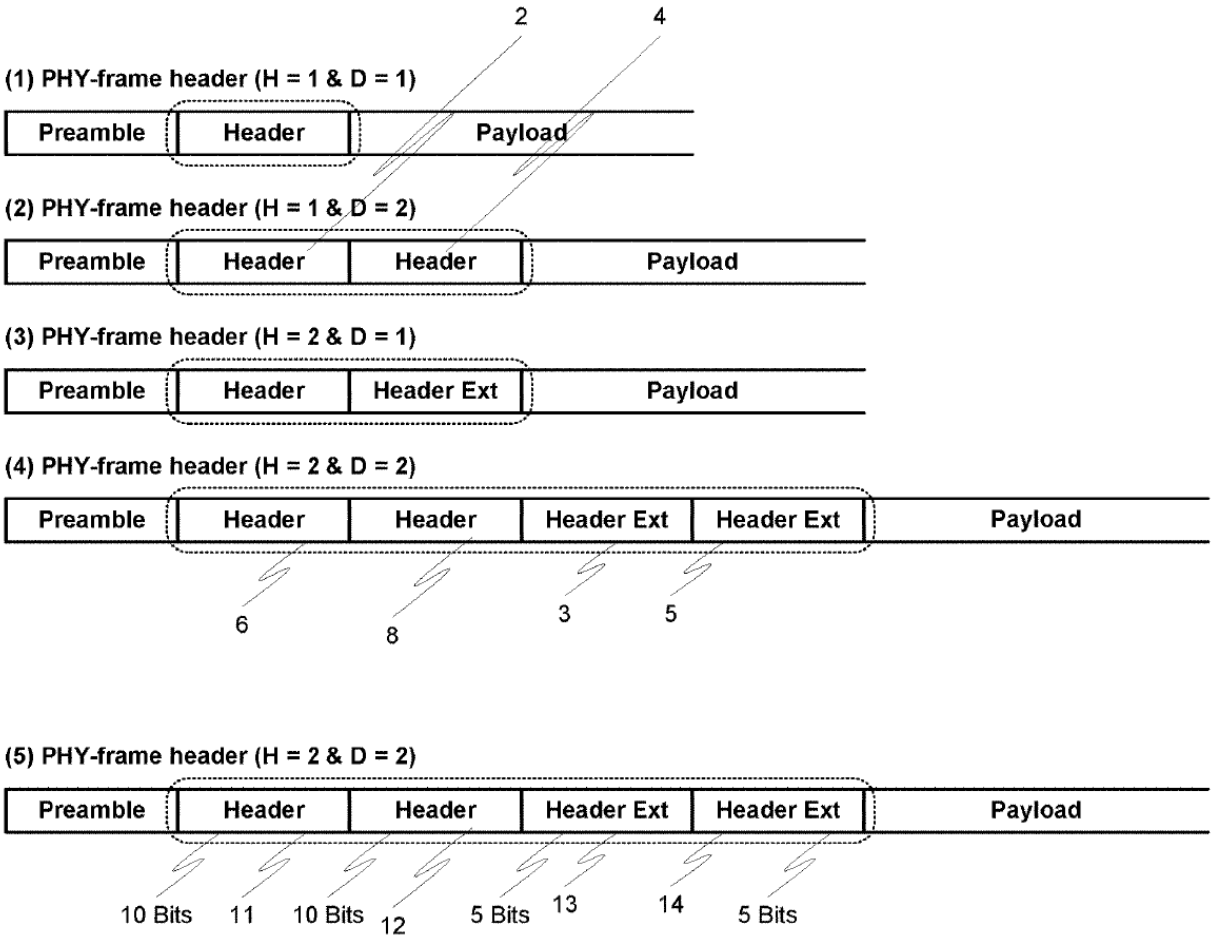


Fig. 1

30. In addition to the variable header repetition, the patents describe a number of ways in which the nodes of a network can understand what header repetition scheme is being used. *See, e.g.*, '361 patent at 2:43-3:57; '707 patent at 2:46-3:60; '449 patent at 2:47-3:61; '459 patent at 2:49-3:61; '272 patent at 2:51-3:67. For example, one scheme assumes that a receiver will be able to decode the header (or at least the D value), which will inform it of how many repetitions to expect. The diversity achieved from the repetitions increases the likelihood that

the entire header is decoded correctly. *See* '361 patent at 2:57-3:3; '707 patent at 2:60-3:6; '449 patent at 2:61-3:7; '459 patent at 2:63-3:9; '272 patent at 2:65-3:11. Another example requires a domain master to communicate the scheme to all nodes, and nodes must determine the scheme in order to properly decode the header. *See* '361 patent at 3:4-14; '707 patent at 3:7-17; '449 patent at 3:8-18; '459 patent at 3:10-19; '272 patent at 3:12-23. Another approach involves certain packets having a fixed repetition value, while at the same time communicating a different repetition value for all other packets that can be variable. *See* '361 patent at 3:24-33; '707 patent at 3:27-36; '449 patent at 3:28-37; '459 patent at 3:29-37; '272 patent at 3:33-43. These and other different approaches are described in further detail in the patents, with reference to the figures. *See* '361 patent at 6:10-10:31, Figs. 2-8; '707 patent at 6:13-10:34, Figs. 2-8; '449 patent at 6:14-10:34, Figs. 2-8; '459 patent at 6:14-10:34, Figs. 2-8; '272 patent at 6:20-10:40, Figs. 2-8.

### B. Person of Ordinary Skill in the Art

31. I understand that Intel and Intel's expert, Dr. LaPorta, assert that a person of ordinary skill in the art ("POSA") at the time of the invention of the '361, '707, '449, '459, and '272 patents would have had "at least a master's degree in electrical engineering or similar discipline, and/or two to three years of experience

working or conducting research in the field of wireless communication protocols, or an equivalent combination of education and experience." 1335-Petition at 9; 1336-Petition at 9; 1337-Petition at 9; 1338-Petition at 9; 1339-Petition at 9; 1340-Petition at 9; 1335-INTEL-1003 ¶62; 1336-INTEL-1003 ¶62; 1337-INTEL-1003 ¶62; 1338-INTEL-1003 ¶62; 1339-1140-INTEL-1003 ¶62.[2] While at this time I did not form an opinion on the level of ordinary skill in the art, I have applied Intel's assertion for a POSA in rendering my opinions.

### C. Claim Construction

32. I have been informed by Counsel of the process of claim construction in patent disputes. I understand that Intel and Dr. LaPorta do not assert any specific claim constructions to any of the terms of the challenged claims. Thus, I have applied the plain and ordinary meaning of the claim terms to a POSA in rendering my opinions in this Declaration.

## V. Relevant Technical Background

33. As described above, the '361, '707, '449, '459, and '272 patents generally relate to methods and systems related to Orthogonal Frequency Division Multiplexing (OFDM) transmission and reception of frames or packets. Within

[2] I note that the claims of the '272 patent are for transmitters and receivers, which are substantively identical.

that broader context, they relate to variable header repetition with OFDM signals, and the claims relate to wireless communication. As explained in Section IV, the teachings of the '361, '707, '449, '459, and '272 patents can be applied to various communications systems. Because the references forming the grounds raised in the Petition are primarily 802.11 references, much of my discussion in this section will be primarily focused on the relevant technical background principles of 802.11 wireless networks. Both the Petition and Dr. LaPorta stated that "[e]xisting 802.11 standards . . . would have been extremely well-known to a POSITA by August 21, 2009." 1135-Petition at 24; 1136-Petition at 25; 1137-Petition at 25; 1138-Petition at 25; 1139-Petition at 25; 1140-Petition at 25; 1135-INTEL-1003 ¶97; 1136-INTEL-1003 ¶97; 1137-INTEL-1003 ¶97; 1138-INTEL-1003 ¶97; 1139-1140-INTEL-1003 ¶97. I agree. 802.11 networks had been around since the late 1990s and various PHYs and improvements were made over the years, leading to a mature technology and set of standards by 2009. *See, e.g.*, AXW-2015 (Gast 2d ed.) at 9-11.

34. It should be understood that much of the explanation below, such as the networking overview and discussion of modulation and coding, are applicable to numerous communications systems, including those discussed in the '361, '707, '449, '459, and '272 patents. For example, Dr. LaPorta describes various aspects

related ITU G.hn. *See* 1135-INTEL-1003 ¶¶45-56; 1136-INTEL-1003 ¶¶45-56; 1137-INTEL-1003 ¶¶45-56; 1138-INTEL-1003 ¶¶45-56; 1139-1140-INTEL-1003 ¶¶45-56. He does not, however, describe modulation modes in detail anywhere in his declaration. The OFDM subcarriers in ITU G.hn are also modulated with various constellations. *See, e.g.*, INTEL-1018 at 58-62.

35. I go into much more detail than Dr. LaPorta and the Petition in this background section, because the details are important to understanding why a POSA would not combine the prior art as in the Petition. By skipping over the details, Dr. LaPorta and the Petition miss important aspects of the prior art.

### A. Networking Overview

36. In networking, devices communicate by sending and receiving messages. Depending on their size, the messages may be broken up into portions often called packets. These packets are the unit of data that are sent and received in a network, whether that network is wired or wireless, private or public.

37. Networking is often performed at various layers according to the Open Systems Interconnection (OSI) Model. Dr. LaPorta provides the below figure illustrating this concept. Dr. LaPorta displays the TCP/IP reference model, which layers are a subset of the 7 layers of the OSI model. Specifically, he illustrates the Physical Layer (OSI Layer 1), Data Link Layer (OSI Layer 2),

Network Layer (OSI Layer 3), Transport Layer (OSI Layer 4), and Application Layer (OSI Layer 7).

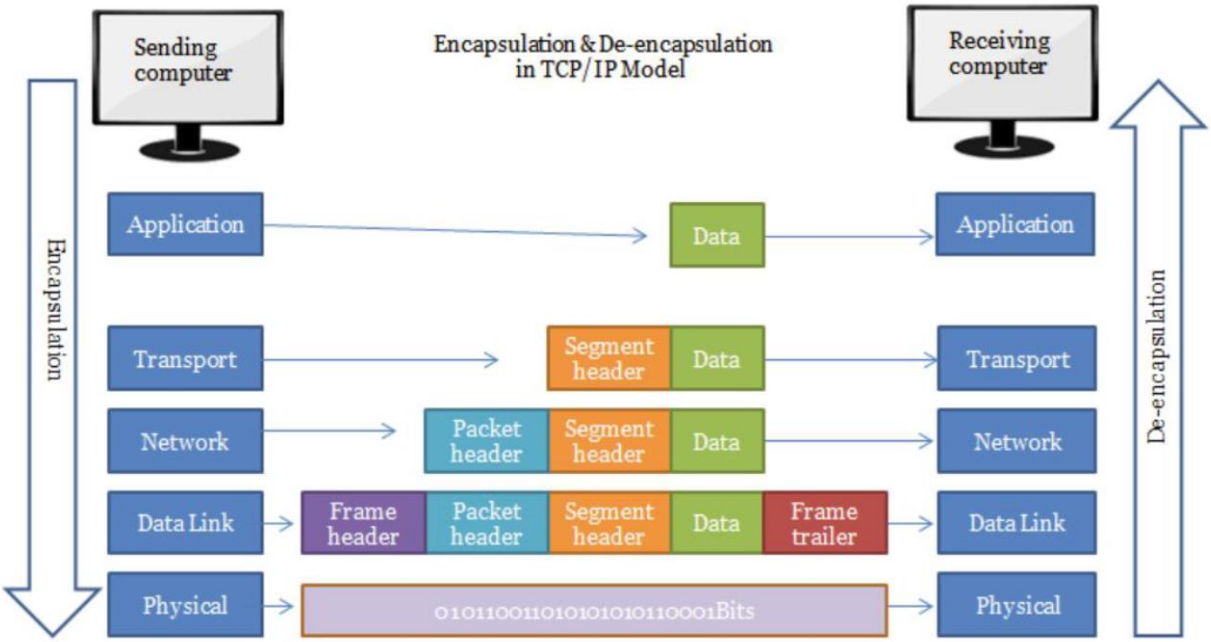


38. The application layer is the highest and most closely related to the user's application, such as a web browser that generates an HTTP request. The data from the upper layers makes it way down the protocol stack to the lower layers, with various "header" information added at each layer. TCP at the Transport Layer and IP at the Network Layer are well-known protocols. TCP controls the end-to-end (process-to-process) flow of the data packets between endpoints across a network, while IP controls the packet routing across the network, providing, for example, addressing information to allow the packets to be passed through the network. The Data Link Layer prepares the data for

transmission onto the physical medium between two adjacent nodes (as opposed to across a network as at the Network Layer) with its own specific protocol providing, for example, flow control and error control capabilities. The Physical Layer deals with the actual transmission and reception of bits by way of electrical, radio, or optical signals as examples.

39. Some examples of networking standards that people are typically familiar with include IEEE standards 802.11, often called WiFi, and 802.3, often called Ethernet. Both are umbrellas for a number of underlying Data Link Layers and Physical Layers. The IEEE 802 family of standards are often depicted as below.

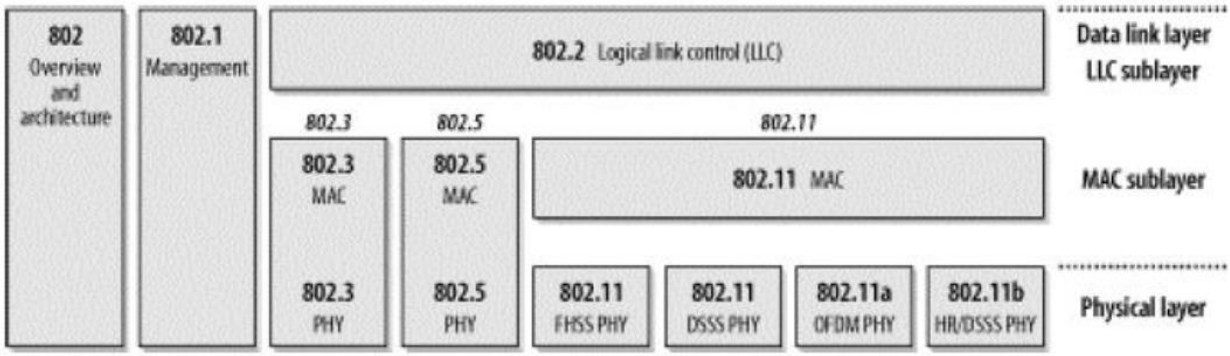


1135-INTEL-1003 ¶57; 1136-INTEL-1003 ¶57; 1137-INTEL-1003 ¶57; 1138-INTEL-1003 ¶57; 1139-1140-INTEL-1003 ¶57; *see also* AXW-2015 at 13. As depicted above, in the IEEE 802 family, the Data Link Layer is broken up into an LLC sublayer and a Medium Access Control ("MAC") sublayer. IEEE 802.2 defines a common logical link control for a number of standards such as WiFi and

Ethernet. Those, in turn, have their own specific MAC sublayer. The MAC is a set of rules to determine how to access the medium and send data, but the details of transmission and reception are left to the Physical Layer, or PHY. AXW-2015 at 13. The MAC defines numerous frame types that define various messages to implement the MAC's rules among the devices of the 802.11 network. *See, e.g.*, AXW-2015 at 32-113.

40. As shown above, there are different 802.11 PHYs, often referred to by letters corresponding with amendments to the base 802.11 standard that added them. The above figure is from 2005, and shows 802.11, 802.11a, 802.11b, and 802.11g PHYs. Since 2005 additional PHYs have been defined, including 802.11n, which will be discussed herein. While the figure above shows a common 802.11 MAC, the various amendments that added different PHYs required consideration at the MAC as well, because of the relationship between the MAC and Physical Layer in 802.11. *See* AXW-2015 at 13-14.

### B. Modulation, Coding, and Error Correction

41. At the Physical Layer of a wireless network, the individual bits to be transmitted are modulated onto a carrier signal for transmission across the medium. Because the 802.11 OFDM PHYs are most relevant here, I will briefly describe the OFDM modulation modes used in 802.11a/g/n. 802.11a was standardized in 1999,

and defines an OFDM PHY in the 5 GHz band. AXW-2015 at 276. The 802.11g PHY "is essentially running 802.11a in the ISM frequency band (2.4 GHz), with a few minor changes to provide backwards compatibility." AXW-2015 at 298-99. 802.11n was published in 2009 and defines an OFDM PHY that can operate in both 2.4 GHz and 5 GHz bands, using OFDM and MIMO capabilities, as well as number of other enhancements, some of which will be discussed below. *See, e.g.*, INTEL-1017 at 247; AXW-2015 at 311-42.

42. OFDM stands for Orthogonal Frequency Division Multiplexing. "OFDM encodes a single transmission into multiple subcarriers." AXW-2015 at 277. In this way, a fast stream of data can be divided into slower streams, distributed to the subcarriers/subchannels, and sent at the same time. "OFDM devices use one wide-frequency channel by breaking it up into several component subchannels. Each subchannel is used to transmit data." AXW-2015 at 277. The slower subchannels can then be put back together into the original fast stream of transmitted data. "OFDM works because the frequencies of the subcarriers are selected so that at each subcarrier frequency, all other subcarriers do not contribute to the overall waveform." AXW-2015 at 278-79. This property is the "orthogonal" part of the name OFDM. This is depicted in the figure below showing seven

subcarriers across the frequency axis. Each subcarrier has a null at the frequency of every other orthogonal subcarrier.

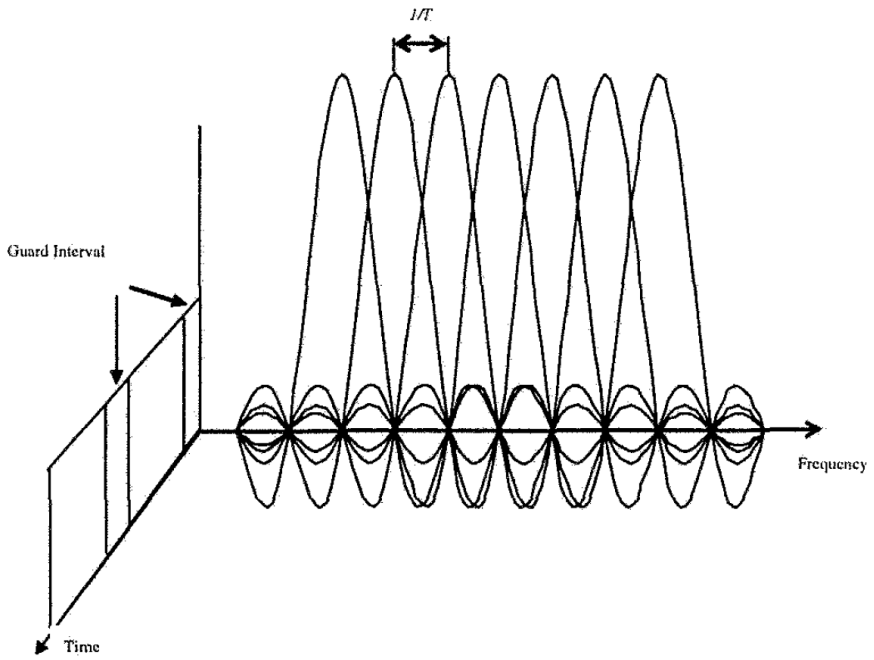


Figure 2.19: OFDM time and frequency span

INTEL-1023 at 50. The depicted subcarriers in the frequency domain also have a time domain waveform, as represented (but not depicted) by the time axis in the figure above. The figure does generally show that in the time domain, the OFDM signal is separated into OFDM symbols with guard intervals. In 802.11a, the general OFDM symbol time duration is 4 µs. *See, e.g.*, AXW-2015 at 283; *see also* INTEL-1023 at 260-63.

43. In 802.11a/g the OFDM occupies a 20 MHz channel composed of 52 subcarriers, generally numbered from -26 to 26. *See, e.g.*, AXW-2015 at 283.

Generally, 4 of the subcarriers, at subcarriers -21, -7, 7, and 21, are used as pilot carriers that help with reception of the signal. *See, e.g.*, AXW-2015 at 283; INTEL-1023 at 260-61. And generally, the remaining 48 subcarriers are used to transmit data. *See, e.g.*, AXW-2015 at 283; INTEL-1023 at 260-61. Additionally, the subcarrier 0 is not used. *See, e.g.*, AXW-2015 at 283; INTEL-1023 at 260-61. This is depicted in the figure below, where data subcarriers are in the gray areas, while the pilot carriers and 0 carrier are represented by white space.

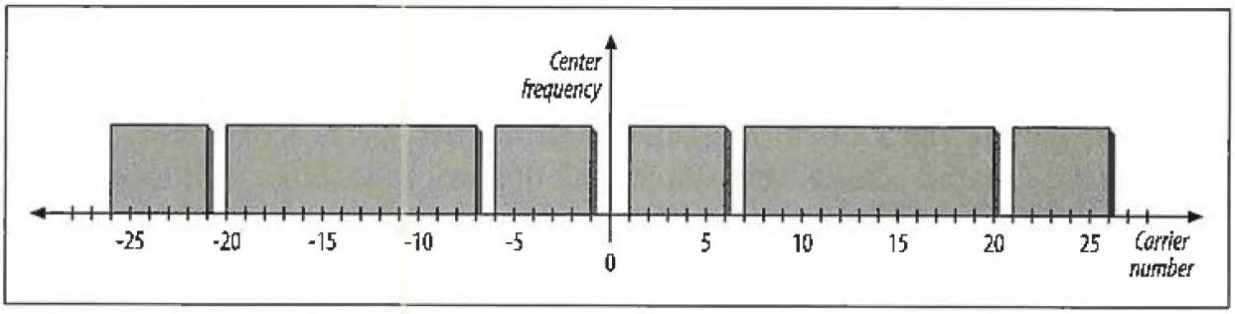


*Figure 13-8. Structure of an OFDM channel*

AXW-2015 at 284.

44. Each subcarrier is modulated with a slower bit stream assigned to it. Relevant to the Petition, we can assume that each subcarrier is modulated with modulation techniques used in 802.11n and prior OFDM-related 802.11 standards. The modulation techniques used in 802.11a are BPSK, QPSK, 16-QAM, and 64-QAM. The signal constellations for these modulation techniques are depicted below.

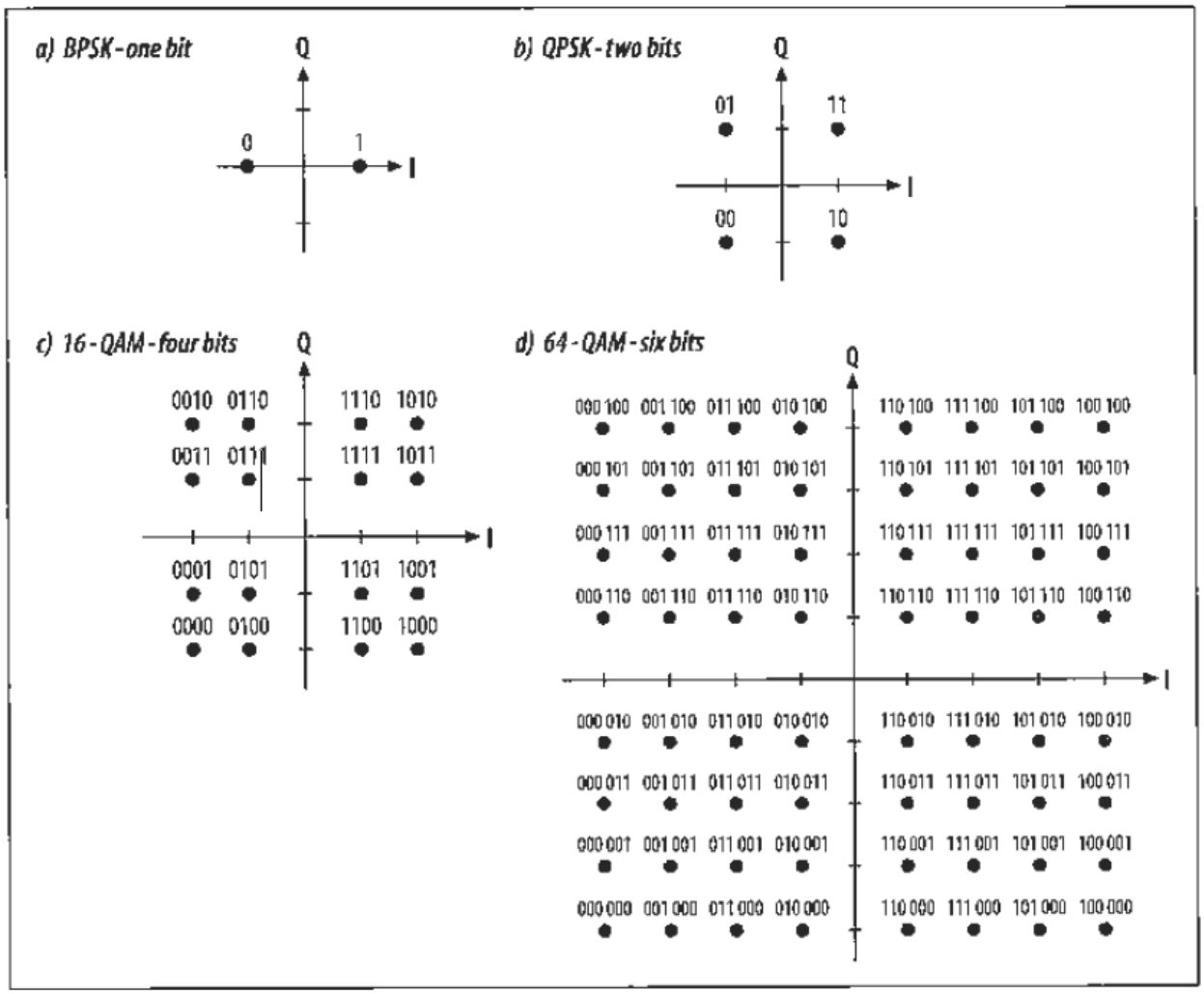


*Figure 13-9. Constellations used by 802.11a*

AXW-2015 at 285. Each dot represents a signal that can be modulated onto a subcarrier of the OFDM signal. As indicated in the figure above, each BPSK signal transmits 1 bit, each QPSK signal transmits 2 bits, each 16-QAM signal transmits 4 bits, and each 64-QAM signal transmits 6 bits. Because symbol durations are the same, higher data rates are achieved using higher order modulation with more constellation dots. But the receiver must be able to distinguish between these

constellation dots. Because transmit power is generally limited, more constellation dots mean the signals are harder to distinguish from each other at the receiver because they are closer together. *See, e.g.*, AXW-2015 at 284-85. This is sometimes referred to as the minimum distance of the constellation. *See* INTEL-1025 at 88-89. This ability to distinguish is generally a function of the signal-to-noise ratio (SNR) of the received signal; higher SNR is required for higher-order constellation to receive the same probability of bit error, often referred to as Bit Error Rate (BER). Said differently, higher-speed modulations pack more bits into a given time interval, but require higher SNRs for the same BER. AXW-2015 at 235. For example, the constellation dots of QPSK will be closer together than BPSK, generally requiring a 3dB increase in SNR to achieve the same error rate in an additive white gaussian noise (AWGN) channel. *See* INTEL-1025 at 93-94. Moving from QPSK to 16-QAM would require another 6.99dB increase in SNR. *See* INTEL-1025 at 94-96. This is sometimes depicted in waterfall curves as shown below.

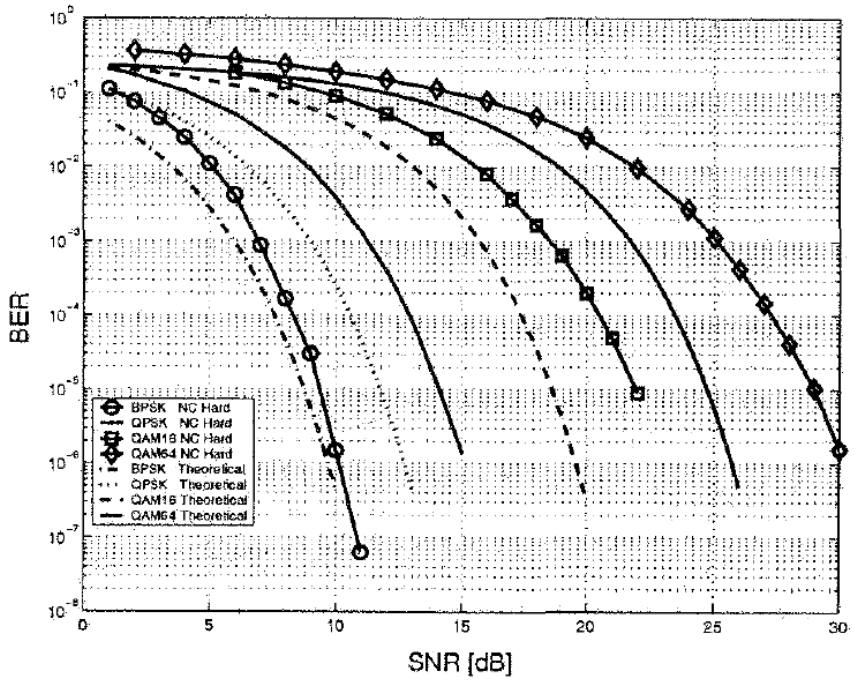


Figure 9.47: Bit error rate comparison of modulation schemes in AWGN

INTEL-1023 at 278.

45. 802.11 also applies various convolutional codes to the bit stream to create redundancy in order to be more protective against (robust to) errors. The original bit stream is called the data bits, while the bit stream after the convolutional encoder is called the coded bits. 802.11a/g used either R=1/2 (2 coded bits for every 1 data bit), R=2/3 (3 coded bits for every 2 data bits), or R=3/4 (4 coded bits for every 3 data bits) for different modulation modes. A higher ratio of coded bits to data bits has more redundant information and is more robust to errors, but at the expense of overall data rate because fewer data bits are being

transmitted in the same unit of time. *See, e.g.*, AXW-2015 at 285-87. 802.11 also uses interleaving of bits across OFDM subcarriers for further robustness. *See, e.g.*, AXW-2015 at 287-88. For 802.11a/g, the resulting modulation and coding schemes are given in the table below.

*Table 13-3. Encoding details for different OFDM data rates*

| Speed (Mbps) | Modulation and coding rate (R) | Coded bits per carrier[a] | Coded bits per symbol | Data bits per symbol[b] |
|---|---|---|---|---|
| 6 | BPSK, R=1/2 | 1 | 48 | 24 |
| 9 | BPSK, R=3/4 | 1 | 48 | 36 |
| 12 | QPSK, R=1/2 | 2 | 96 | 48 |
| 18 | QPSK, R=3/4 | 2 | 96 | 72 |
| 24 | 16-QAM, R=1/2 | 4 | 192 | 96 |
| 36 | 16-QAM, R=3/4 | 4 | 192 | 144 |
| 48 | 64-QAM, R=2/3 | 6 | 288 | 192 |
| 54 | 64-QAM, R=3/4 | 6 | 288 | 216 |
| 72[c] | 64-QAM | 6 | 288 | 288 |

[a] Coded bits per subchannel is a function of the modulation (BPSK, QPSK, 16-QAM, or 64-QAM).
[b] The data bits per symbol is a function of the rate of the convolutional code.
[c] Although no rate has been standardized without a convolutional code, many products offer a mode where it is dropped for additional throughput.

AXW-2015 at 293-94.

### C. 802.11a PHY Framing

46. As I described in Section V.A above, the data and headers from upper layers make their way down the protocol stack. This is depicted below for the MAC and PHY from the 802.11a standard.

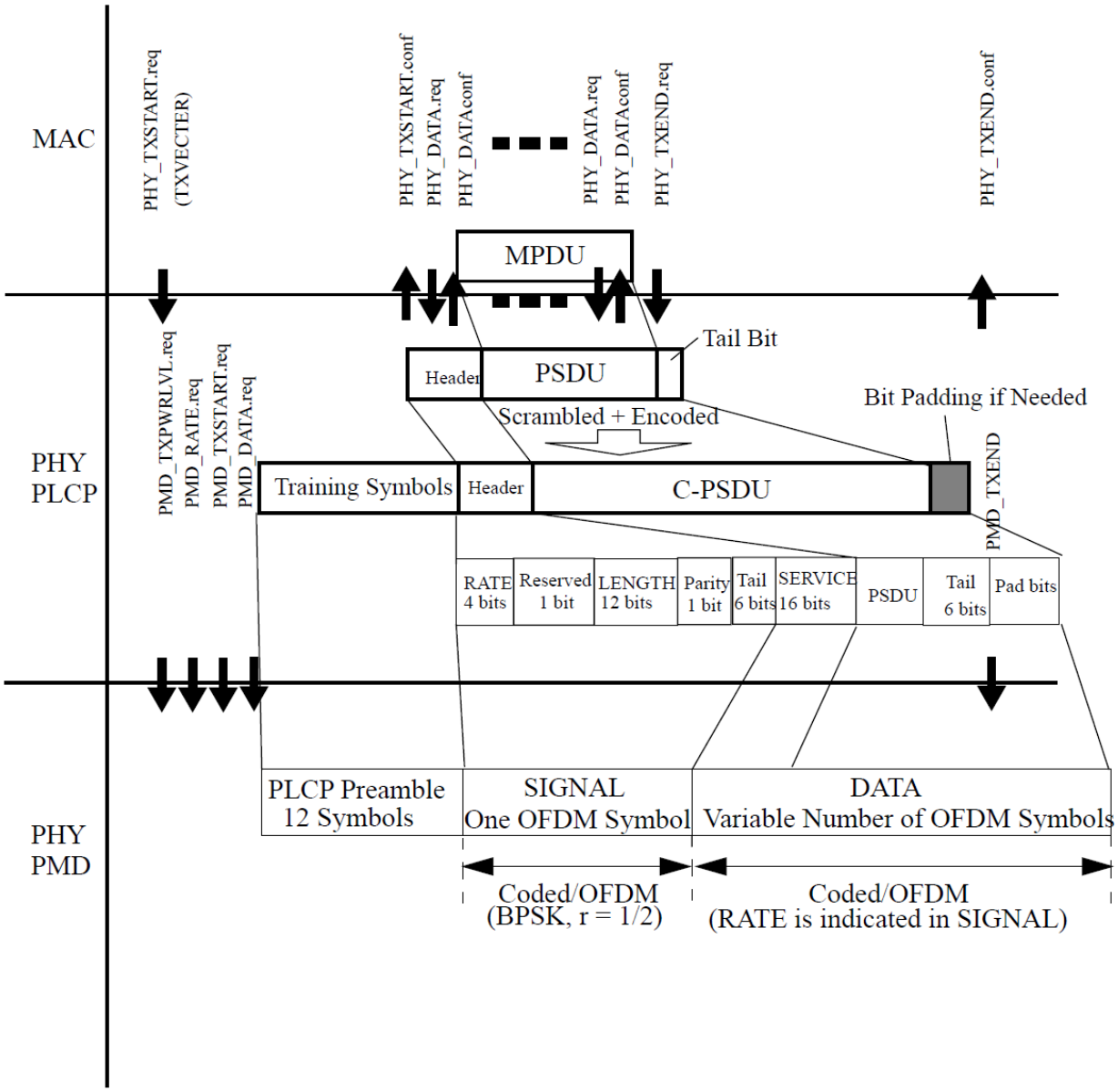


**Figure 122—PLCP transmit procedure**

INTEL-1015 at 33. Simplified, the MAC provides its MPDU to the PHY Physical Layer Convergence Protocol (PLCP), along with control information, which helps prepare the frame for transmission onto the air interface. Training symbols are added to a preamble; a PLCP header comes next, and then the PSDU containing

that data to be transmitted, forming a complete PLCP frame. *See* INTEL-1015 at 7-8; *see also* INTEL-1015 at 12.

47. As shown in the figure above, a portion of the PLCP header is referred to as the SIGNAL field in 802.11a. *See* INTEL-1015 at 7. As shown above, the SIGNAL field contains "the LENGTH, RATE, a reserved bit, a parity bit (with 6 'zero' tail bits appended)" and "is transmitted with the most robust combination of BPSK modulation and a coding rate of R = ½." INTEL-1015 at 7; *see also* INTEL-1040 at 140 ("The PLCP preamble and the signal field are always transmitted at 6 Mbps, binary phase shift keying (BPSK)-OFDM modulated using convolutional encoding rate R = ½."). This is "to ensure reliable reception." INTEL-1025 at 35. The SIGNAL field contains 24 bits of information, and the R = ½ code turns that into 48 bits to be transmitted, which fits into a "single OFDM symbol." INTEL-1015 at 7. Thus, for 802.11a (and 802.11g), the SIGNAL field always occupies a single OFDM symbol that is modulated with BPSK and R = ½ coding.

48. As noted in the figure above, the number of data OFDM symbols is variable. Further, these symbols can be modulated at any of the modulation modes and code rate combinations described in the previous section.

49. A more detailed timing diagram for the frame is shown below, from 802.11a, annotated to match the above diagram. The preamble "is composed of 12

OFDM symbols that synchronize various timers between the transmitter and the receiver. The first 10 symbols are short training sequences, which the receiver uses to lock on to the signal, select an appropriate antenna if the receiver is using multiple antennas, and synchronize the large-scale timing relationships required to begin decoding the following symbols." AXW-2015 at 291. "Two long training sequences follow the short training sequences. Long training sequences fine-tune the timing acquisition and are protected by a guard interval." AXW-2015 at 291-92.

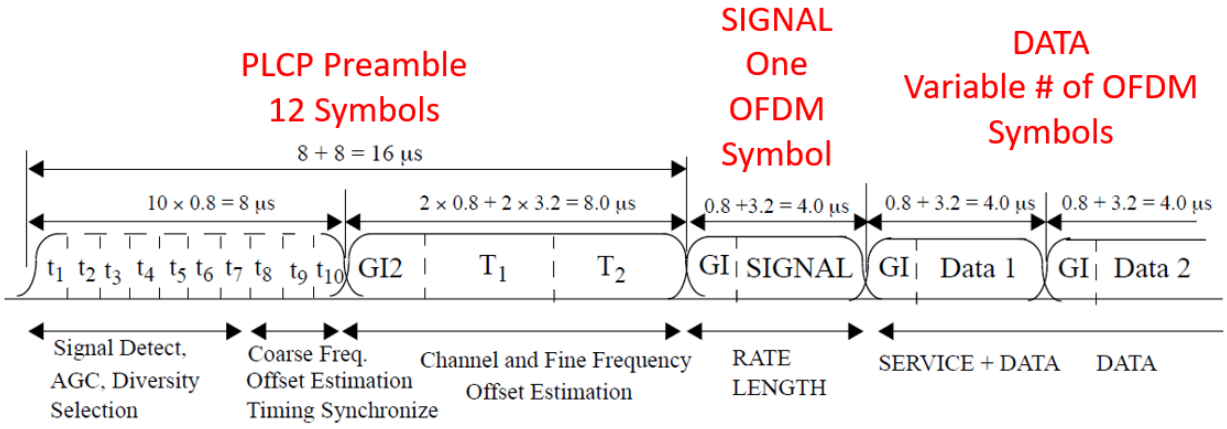


**Figure 110—OFDM training structure**

INTEL-1015 at 12 (annotated in red). Thus, training sequences like those defined in 802.11a are necessary to prepare the receiving hardware to receive the information-bearing portions of the packet by setting the gain of the RF chain, making antennas selections, synchronizing timing with the received signal, and/or making adjustments to remove error sources during demodulation. *See, e.g.*,

INTEL-1025 at 48 ("Without accurate synchronization algorithms, it is not possible to reliably receive the transmitted data."), 53-81; INTEL-1023 at 99-165.

### D. The Wireless Medium and 802.11

50. In this section I provide an overview of the wireless medium and 802.11. This overview is not meant to be exhaustive, as there are many considerations for, and environments in which, wireless communications may be used.

51. Two primary differences between wireless networks, like WiFi, and wired networks, like Ethernet, are the lack of a wired interface and the resulting mobility due to the lack of wires. INTEL-1040 at 2, 161. The wireless channel is generally a shared medium, while many modern wired interfaces serve physical connections between only two devices. The wireless spectrum is generally segmented into different frequency bands. *See, e.g.*, AXW-2015 at 3-5. These bands are generally regulated in different countries to put constraints on use of the wireless channel in a particular frequency band. *See, e.g.*, AXW-2015 at 5. The wireless channel is not only shared with other devices on a particular network, but different other devices using the frequency band. *See, e.g.*, AXW-2015 at 5; INTEL-1040 at 161. This shared nature of the wireless channel creates an

interference problem. *See, e.g.*, INTEL-1024 at 1-2; AXW-2015 at 34, 44; INTEL-1040 at 171-72.

52. The wireless channel is also subject to numerous electromagnetic propagation effects beyond interference from other devices. A primary one is path loss, which refers to the loss in signal strength as the radio wave propagates. The further the signal travels, the more its signal strength diminishes. *See, e.g.*, AXW-2015 at 235 ("As radio signals travel through space, they degrade."); INTEL-1023 at 16-17 ("The average received power diminishes with distance."). In free space, the signal degrades as the square of the distance traveled. *See, e.g.*, INTEL-1023 at 16-17; INTEL-1040 at 166; INTEL-1025 at 114-17. In other environments, such as indoor environments, the degradation is sometimes modeled as related to more than the square of the distance traveled to try to account for effects such as those discussed below, but often other wireless channel models are more appropriate to understand such effects. *See, e.g.*, INTEL-1040 at 166 ("For indoor applications beyond 20 feet, propagation losses increase at about 30 dB per 100 feet."); INTEL-1025 at 114-17 (describing path loss coefficient as different for free space and indoor environment); AXW-2015 at 445-46 (describing that free space loss is "an 'ideal' number" that neglects factors relevant to 802.11 networks).

53. Additionally, "the larger the carrier frequency the smaller the operating range" because the path loss increases with increasing carrier frequency. INTEL-1023 at 17. This fundamental property would have been known to a POSA. Indeed, this has been studied in connection with 802.11, showing range improvements with systems operating at 700 MHz rather than 2.4 GHz. *See* AXW-2014 (ITU News) at 5 ("It was observed that the range of 802.11b/g WLAN operating at 700 MHz can double in non line-of-sight conditions and quadruple in line-of-sight, as compared to 2.4 GHz."). Additionally, the IEEE authorized amendments to the 802.11 standards for OFDM operation below 1 GHz, in part, because of improved range. *See* AXW-2025 (802.11af Project Authorization); AXW-2026 (802.11ah Project Authorization).

54. Regardless, it is generally true that the signal degrades the further the receiver is from the transmitter. Consider the figure below depicting an access point (at distance = 0) and two receiving laptops. The ability of a receiver to properly receive a signal is limited by its noise floor. The ratio of the received signal to the noise floor is referred to as the signal-to-noise ratio, or SNR. As described above, in general, higher order modulations pack more bits into a given time interval and require higher SNR for a particular bit error rate. AXW-2015 at 235. In the figure below, the receiving laptop closer to the access point will receive

a stronger signal corresponding to larger SNR than the receiving laptop further away from the access point. Or put another way, if the laptop moves from the position closer to the access point to the position further from the access point, the SNR of the signals it can receive will degrade. *See, e.g.*, AXW-2015 at 235 ("Over distance, the degradation of the signal will limit the signal-to-noise ratio at the receiver. As a station strays farther from an access point, the signal level drops; with a constant noise floor, the degraded signal will result in a degraded signal to noise ratio."), 445 ("Unlike wired networks, the speed at which wireless networks operate depends on the distance from the nearest network uplink. As stations move farther from the serving access point, signals become weaker and the operational speed falls. Throughput depends on distance from the access point and the position of the device in a way that is unfamiliar to users of wired networks."); INTEL-1040 at 166 ("As the receiver moves away from the transmitter, the receiver's signal power decays until it reaches the receiver's noise floor, at which time the bit error rate becomes unacceptable."). Thus, in general, the closer laptop will be able to communicate with the access point using higher rate modulation than the farther-away laptop. Or, the laptop will be able to communicate at a higher data rate when it is closer to the access point. *See, e.g.*, INTEL-1025 at 114-117.

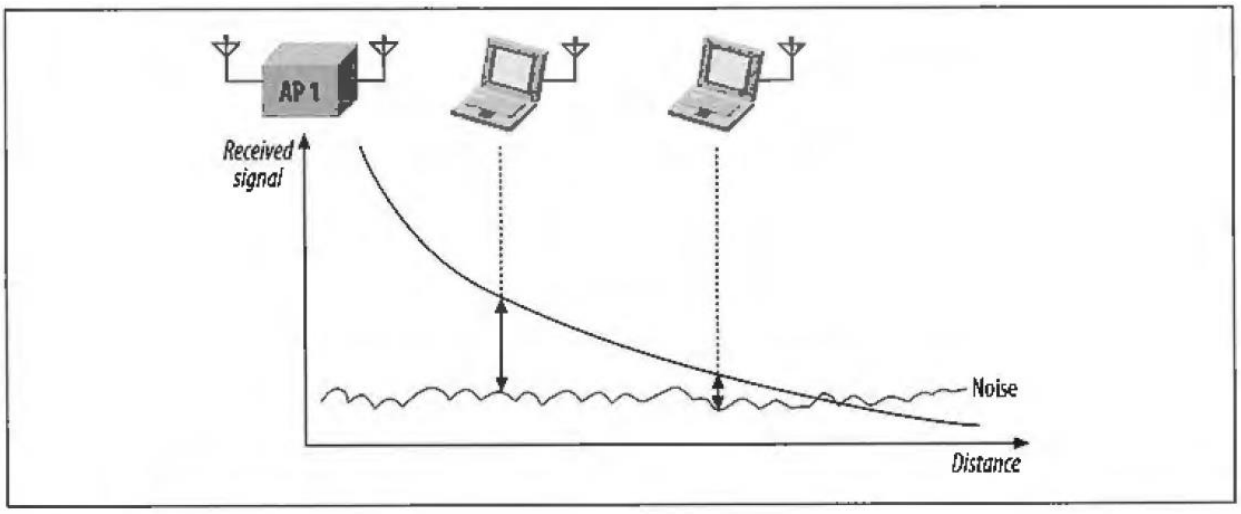


*Figure 10-4. Throughput versus distance*

AXW-2015 at 235; *see also* INTEL-1040 at 167. The below figure shows a rough qualitative depiction of how the data rate of a network changes with distance, but with the access point in the middle and showing radial regions of data rate. *See* AXW-2015 at 445-46.

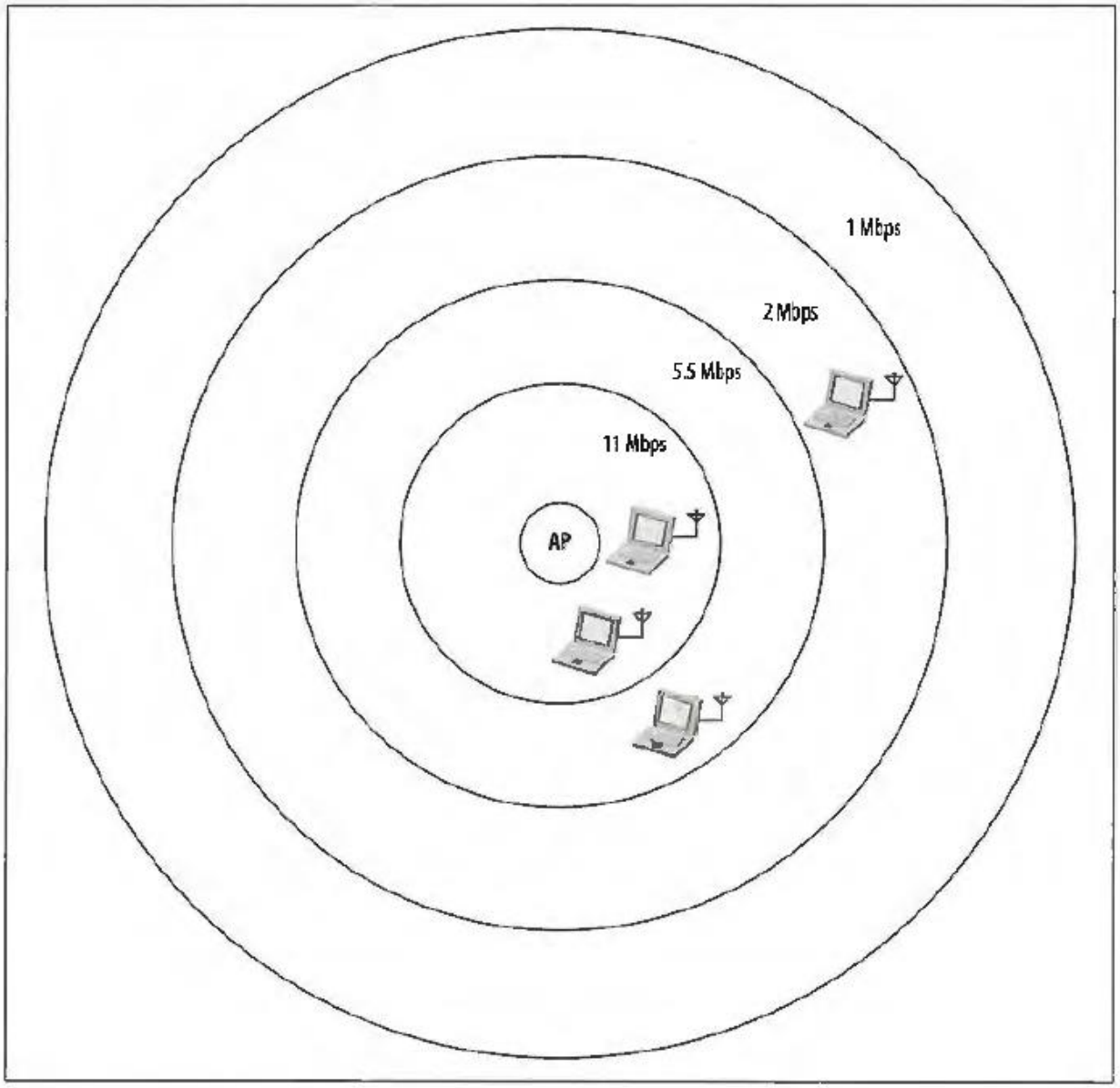


*Figure 21-1. Dependence of performance on range*

AXW-2015 at 446.

55. The wireless channel is dynamic, meaning that wireless signals can experience different channel effects that vary over time and depend on the wireless frequency that is used. "Radio waves bounce off objects, penetrate through walls,

and can often behave somewhat unpredictably. Radio waves can suffer from a number of propagation problems that may interrupt the radio link, such as multipath interference and shadows." AXW-2015 at 6, 445-46. "[E]verything in the environment is either a reflector or an attenuator of the signal carrying the LAN data. This can cause significant changes in the strength of a signal received by a WLAN station, sometimes severing the station from the LAN entirely. At the wavelengths used in the IEEE 802.11 WLAN, small changes in position can cause large changes in the received signal strength. This is due to the signal traveling many paths of differing length to arrive at the receiver." INTEL-1040 at 2-3, 164; *see also, e.g.*, INTEL-1024 at 10.

56. The phenomenon of the transmitted signal taking different paths to arrive at a receiver is referred to as multipath. A simplified example is depicted below.

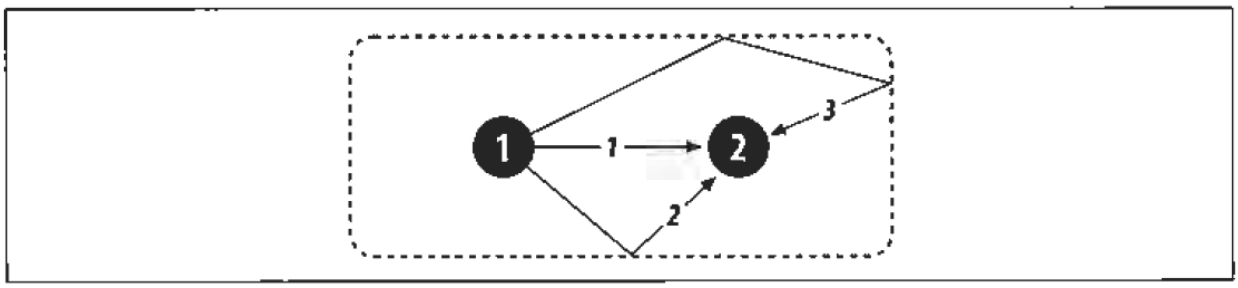


*Figure 10-6. Multiple paths*

AXW-2015 at 237; *see also* INTEL-1040 at 162. If the signal is the same along each path, the reflected radio waves may arrive either completely in-phase as in (b)

below, completely out-of-phase as in (c) below, or somewhere in between as in (a) below. The destructive interference of the waves combining at the receiver is often referred to as multipath fading or multipath interference. *See, e.g.*, AXW-2015 at 237; INTEL-1040 at 168; INTEL-1023 at 18-26.

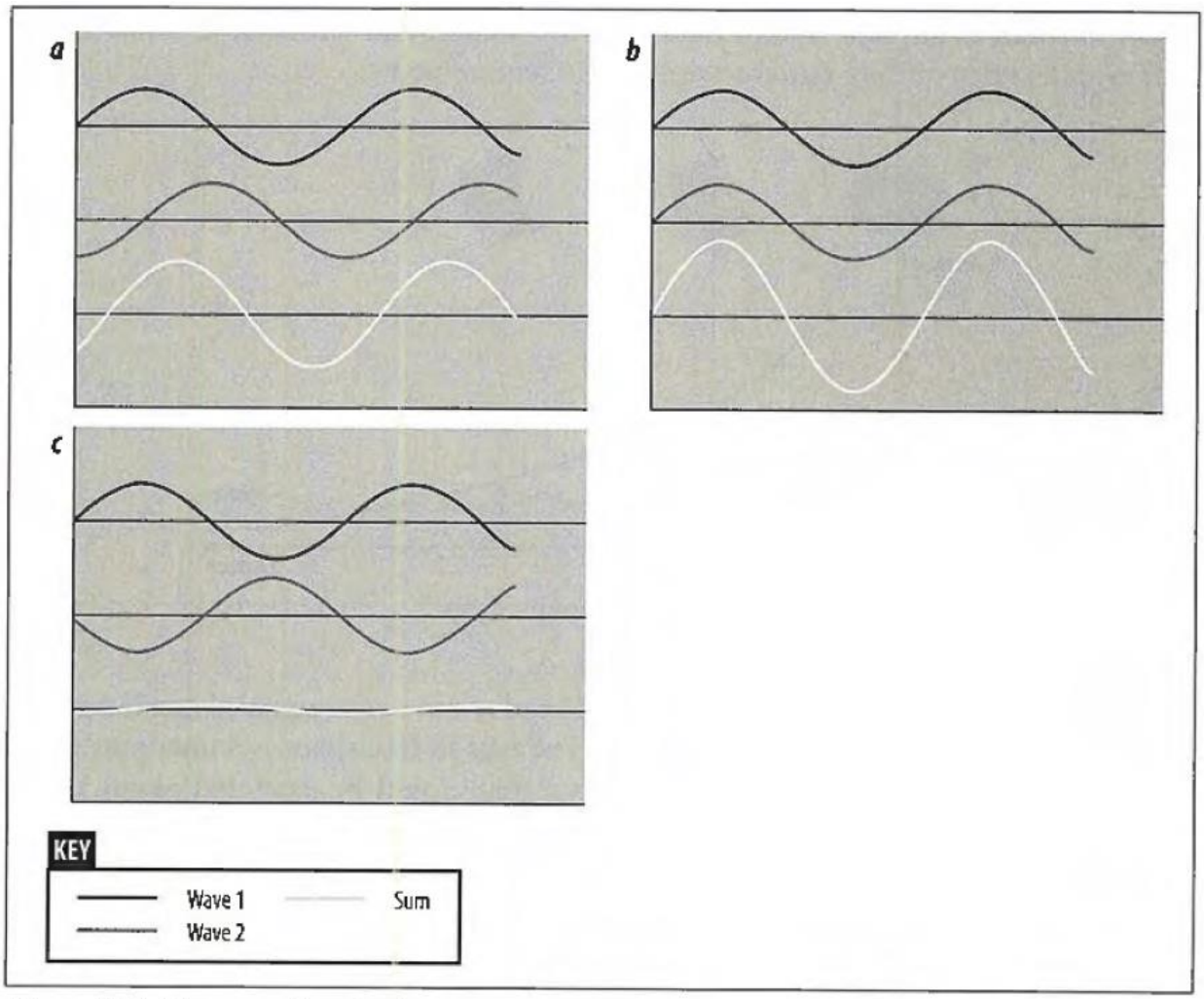


*Figure 10-5. Wave combination by superposition*

AXW-2015 at 236. As discussed in the next section, path diversity can also be used to enhance wireless performance.

57. The effects of the air interface and the environment in which the signals propagate affect the error rates of the modulated signals. The below figure shows error rates of 802.11a in a multipath channel, including all the modulation modes (BPSK, QPSK, 16-QAM, and 64-QAM) and associated coding rates.

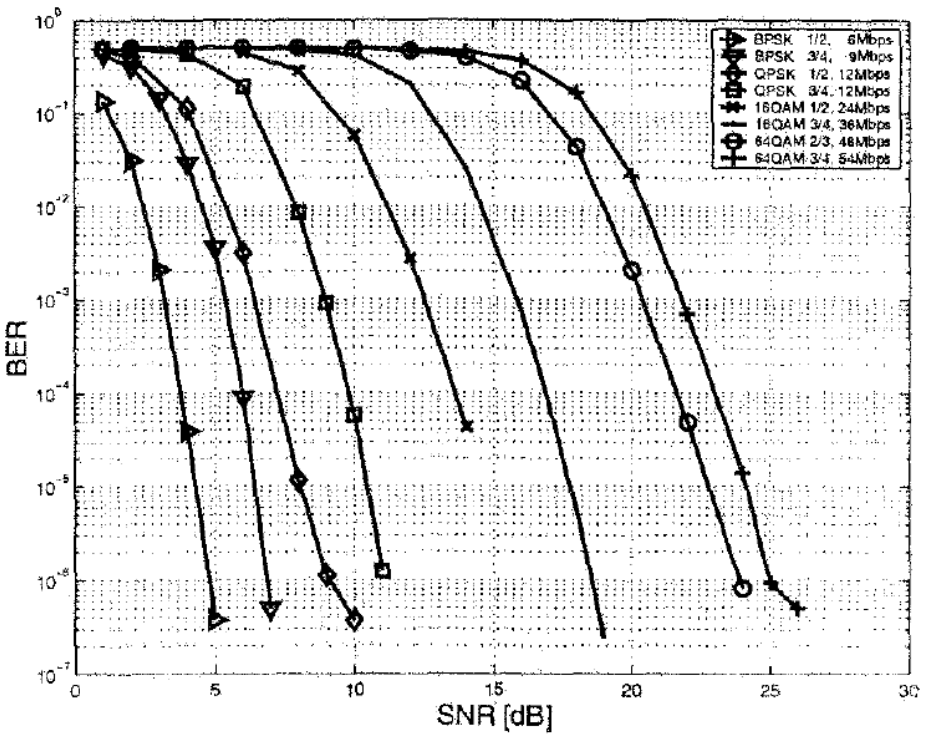


Figure 9.46: Bit error rate of IEEE 802.11a in Rayleigh Channel

INTEL-1023 at 276-77. As can be seen, for a given bit error rate (BER), for example $10^{-4}$, QPSK (R = ½) requires around 3dB more SNR than BPSK (R = ½) to achieve the same bit error rate.

### E. Diversity and MIMO

58. As discussed in the previous section, the multipath nature of wireless communication creates a fading environment. *See, e.g.*, INTEL-1023 at 18-26. In addition to coding and interleaving, discussed above in Section V.B and which also can be considered a form of diversity, other diversity techniques can help cope with a fading environment. *See, e.g.*, INTEL-1023 at 26-27; INTEL-1024 at 59-60. The general idea with diversity is to provide the receiver with options that can enhance reception. Diversity can be provided in frequency, time, space, or polarization to provide separate channels. *See, e.g.*, INTEL-1023 at 26-27; INTEL-1024 at 59-60.

59. Dr. LaPorta discusses the below figure from INTEL-1024 as an example of using repetition coding to achieve time diversity. 1135-INTEL-1003 ¶44; 1136-INTEL-1003 ¶44; 1137-INTEL-1003 ¶44; 1138-INTEL-1003 ¶44; 1139-1140-INTEL-1003 ¶44. Dr. LaPorta asserts that, "if a transmitted symbol is not repeated, a deep fade [can] wipe[s] out the symbol." 1135-INTEL-1003 ¶44; 1136-INTEL-1003 ¶44; 1137-INTEL-1003 ¶44; 1138-INTEL-1003 ¶44; 1139-1140-INTEL-1003 ¶44. He then asserts, "if the information is repeated, a deep fade wipes out only one copy of the repeated information, allowing the data to be recovered." 1135-INTEL-1003 ¶44; 1136-INTEL-1003 ¶44; 1137-INTEL-1003

¶44; 1138-INTEL-1003 ¶44; 1139-1140-INTEL-1003 ¶44. That is a misunderstanding of the figure.

**Figure 3.5** The codewords are transmitted over consecutive symbols (top) and interleaved (bottom). A deep fade will wipe out the entire codeword in the former case but only one coded symbol from each codeword in the latter. In the latter case, each codeword can still be recovered from the other three unfaded symbols.

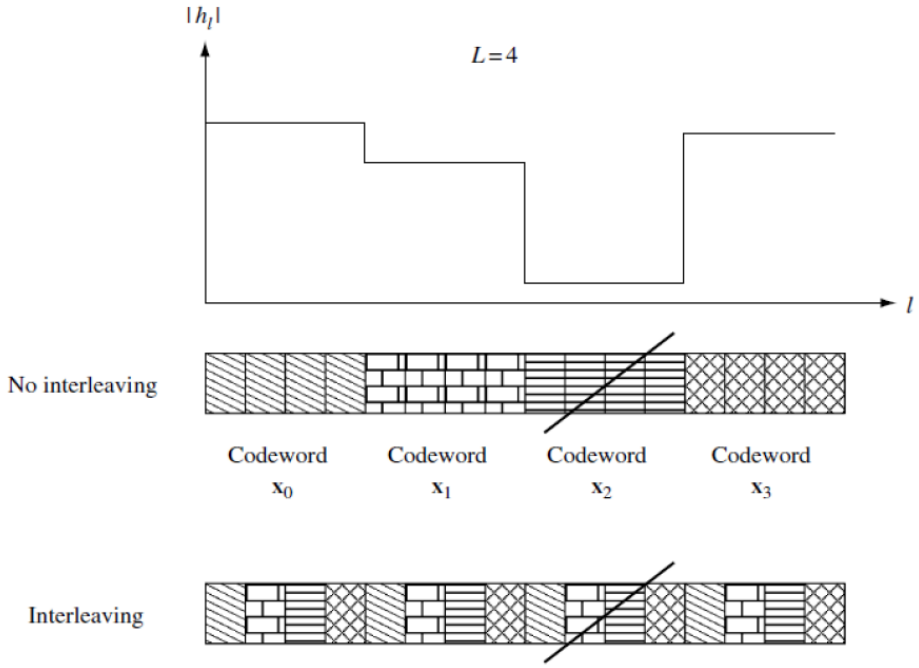


60. The sentence referencing this figure says: "To ensure that the coded symbols are transmitted through independent or nearly independent fading gains, *interleaving* of codewords is required (Figure 3.5)." INTEL-1024 at 60. There is no mention of repetition until the subsequent subsection. *See* INTEL-1024 at 60. In the figure, in the "No interleaving" case, the entire third codeword is corrupted by the deep fade. Interleaving is used to scramble portions of each codeword over time, such that the deep fade only affects 1 out of 4 symbols of every codeword, rather than eliminating the entirety of the third codeword. While not described this way, even if one assumes that each codeword of the figure consists of 4 repeated

symbols, it is clear that repetition alone (in the presence of a long enough fade) is not sufficient in the example above to recover each codeword. Repeating symbols in time is also not an efficient use of the wireless channel. *See, e.g.*, INTEL-1024 at 59 (noting that repetition coding "is usually quite wasteful of the degrees of freedom of the channel"). Other techniques have been developed that provide diversity gains and more efficiently use the channel. *See, e.g.*, INTEL-1024 at 71-72 (describing antenna diversity and receive diversity), 77-80 (describing MIMO and use of more degrees of freedom).

61. "Space diversity is one of the most efficient diversity technique compared to time or frequency. Multiple slightly separated antennas in space are used to create independent paths to achieve uncorrelated channels." INTEL-1023 at 21-22. Use of multiple antennas is a form of space diversity, also referred to as antenna diversity. *See, e.g.*, INTEL-1024 at 59, 71; INTEL-1040 at 172-73; INTEL-1025 at 124. "[A]ntenna diversity can be used to either improve the link performance of a signal or increase data throughput." INTEL-1025 at 124. In a simple form, antennas are spaced apart from each other to minimize the effects of the uncorrelated multipath at the receiver, allowing the receiver to pick and demodulate the signal with better SNR. INTEL-1040 at 172; *see also, e.g.*, AXW-2015 at 312 (describing interfaces with "two antennas in a diversity configuration,

but the basis of diversity is that the 'best' antenna is selected" and "only a single antenna is used at any point"); INTEL-1025 at 131-33 (describing "selection diversity" as "choosing the receive antenna with the largest SNR in each symbol interval").

62. A more advanced form of diversity at the receiver is Maximal Ratio Combining (MRC), which requires multiple antennas and a receive chain processing connected to each of those antennas. *See, e.g.*, INTEL-1025 at 133-34; AXW-2027 (Ouyang). Rather than picking one received signal or another for reception, a weighted sum of the received signals can be used. *See, e.g.*, INTEL-1025 at 133-35.

63. While the above relates to improving reception, the general concept can be extended to transmission as well. A multiple input-multiple-output (MIMO) system has transmit- and receive-chains connected to each transmitting or receiving antenna. *See* AXW-2015 at 312. "Each RF chain is capable of simultaneous reception or transmission, which can dramatically improve throughput. Furthermore, simultaneous receiver processing has benefits in resolving multipath interference, and may improve the quality of the received signal far beyond simple diversity. Each RF chain and its corresponding antenna are responsible for transmitting a *spatial stream*." AXW-2015 at 312. This is also

referred to as spatial multiplexing, where "independent data streams are multiplexed in space." INTEL-1024 at 79. This approach takes advantage of the multipath in the environment to send independent data streams at the same time, increasing the throughput of the system.

64. As I have explained in this and previous sections, there are numerous ways to improve the range for two communicating devices. These include changing the modulation mode, decreasing the data rate, using a larger code rate, using antenna diversity techniques such as selection diversity, MRC, or MIMO, increasing the transmit power, improving receiver sensitivity, changing RF components, changing the transmission frequency, MIMO-based transformations like beamforming, and repeating the information. However, the Petition does not justify the choice of repetition; indeed, there is not even discussion of these options as alternatives. Wireless engineering is a series of tradeoffs, and there are a number of ways to arrive at a solution, but a POSA must consider both the advantages and disadvantages of the different approaches.

### F. The Hidden Terminal Problem

65. In a wireless communication environment, it cannot be assumed that every device can communicate with or even hear transmissions of every other device in the area. This is illustrated below. Laptop 1 can communicate with

Laptop 2, but not Laptop 3. Similarly, Laptop 3 can communicate with Laptop 2, but not Laptop 1. Thus, Laptop 3 is "hidden" from Laptop 1, and similarly Laptop 1 is "hidden" from Laptop 3.

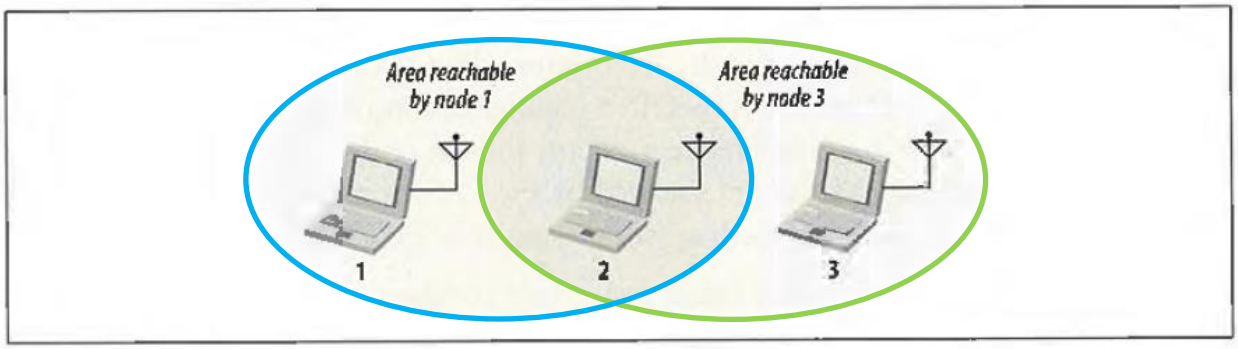


*Figure 3-2. Nodes 1 and 3 are "hidden"*

AXW-2015 at 35 (annotated)[3]; *see also* INTEL-1040 at 21-22. Absent mechanisms to deal with the hidden terminal problem, it can lead to collisions. For example, "[i]f a simple transmit-and-pray protocol was used, it would be easy for node 1 and node 3 to transmit simultaneously, thus rendering node 2 unable to make sense of anything. Furthermore, nodes 1 and 3 would not have any indication of the error because the collision was local to node 2." AXW-2015 at 35. Failed

[3] The copy from the book does not clearly show the zones in which node 1 and node 3 can communicate, so I have annotated those zones in blue and green respectively. They overlap where node 2 is located.

transmissions lead to retransmissions and backoffs, meaning decreased throughput for the system. *See* AXW-2015 at 34-44.

66. The 802.11 standards, and specifically the MAC, exchange control frames to deal with the hidden node problem. Request to Send (RTS) and Clear to Send (CTS) exchanges before sending the actual data are used to reduce the likelihood of collisions in data transmissions due to a hidden-terminal problem. *See* AXW-2015 at 35-36; INTEL-1040 at 21-24.

### G. TGn and 802.11n

67. Dr. LaPorta states that the IEEE created the IEEE 802.11n task group (TGn) in 2004. 1135-INTEL-1003 ¶60; 1136-INTEL-1003 ¶60; 1137-INTEL-1003 ¶60; 1138-INTEL-1003 ¶60; 1139-1140-INTEL-1003 ¶60. TGn's goal was to achieve 100 Mbps net throughput. AXW-2015 at 311. While a number of proposals were initially made, proposals from TGn Sync and WWiSE (short for "World-Wide Spectrum Efficiency") emerged as leading candidates. *See* AXW-2015 at 311. "At a very high level, both proposals are similar, though they differ in the emphasis on increasing peak data rates versus improving efficiency. Each of them makes use of multiple-input/multiple-output (MIMO) technology in several configurations and provides for backwards compatibility with installed systems in the same frequency band. Both support operation in the current 20 MHz

channels, with provisions to use double-width 40 MHz channels for extra throughput." AXW-2015 at 311. There were, of course, numerous differences between them as well. *See, e.g.*, AXW-2015 at 314-42.

68. While there were a number of TGn Sync and WWiSE proposals that evolved over time, I will focus on the TGn Sync proposal from the January 2005 timeframe and the July 2005 WWiSE proposal because they are most addressed in the Petition. *See* INTEL-1012; INTEL-1006. I note from review of the IEEE mentor website (also identified in the Lansford Declaration (INTEL-1007 ¶20)[4]), under the TGn Group, there are proposals and presentations of proposals (including revisions) both before and after the above two proposals.

---

[4] The Lansford Declaration purports to explain the availability of IEEE working group materials. It refers to an FTP (file transfer protocol) site where such materials may have been available. *See* INTEL-1007 ¶19. I note that FTP sites pre-date, and are not, websites like people are familiar with today. FTP sites generally allow a user to see and navigate a directory structure, as well as upload or download files, depending on permissions. They are not used like websites where information is posted in a form immediately loaded by a web browser.

69. I was able to find these files because I knew exactly what I was looking for. My experience with the IEEE mentor website is that it provides very limited searching capabilities and does not appear to search within the contents of the files posted. The search appears to only allow searching in the document control number, the title, the author, or the author's affiliation. For example, a search for "range" does not return any WWiSE proposal. Thus, when using the IEEE mentor website, one would have to open files individually to see if it has anything relevant or useful to their search.

**1. TGn Sync Proposals**

70. As the January 2005 TGn Sync proposal explains, it is intended to achieve 243 Mbps rate using two antennas, with options for rates beyond 600 Mbps. *See* INTEL-1012 at 3. "The PHY techniques used to achieve the higher data rates involve a MIMO evolution of 802.11 OFDM PHY with spatial division multiplexing of spatial streams, wider bandwidth options (either 20MHz or 40MHz, but not required in regulatory domains where prohibited) and an optimized interleaver for both the 20 MHz and 40MHz channelizations. Additionally, optional enhancements include advanced FEC coding techniques (LDPC), transmit beamforming with negligible additional cost in the receiving client device and/or additional RF chains. These options provide scalability if

additional robustness and/or throughput is required." INTEL-1012 at 3; *see also* INTEL-1012 at 20, 110-11. Additional improvements over legacy 802.11 are also described. *See* INTEL-1012 at 3-4, 19-20.

71. As with the legacy 802.11a/g OFDM PHY implementation, the January 2005 TGn Sync proposal uses 48 data subcarriers with 4 pilot subcarriers in the 20 MHz mode. INTEL-1012 at 111, 118-19.

72. The PPDU format for two antennas is depicted below. The red boxes indicate that when those symbols are transmitted from the second antenna, cyclical delay diversity should be applied to avoid unintentional beamforming. INTEL-1012 at 113. The L-STF, L-LTF, and L-SIG are "identical" to the legacy preamble and SIGNAL fields discussed above for 802.11a/g. INTEL-1012 at 113-14.

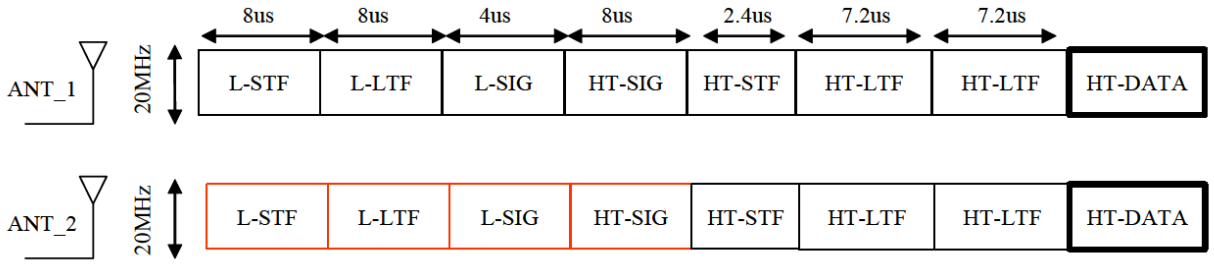


**Figure 47: PPDU Format for 2x20 Mandatory Basic MIMO Transmission**

INTEL-1012 at 112. "The HT-SIG contains information needed to correctly de-map and decode the HT data field (i.e. the MIMO-OFDM symbols). It also contains fields for supporting advanced techniques . . . ." INTEL-1012 at 115. The HT-STF and HT-LTF are additional training symbols for "accurate power

measurement for MIMO AGC" and "channel estimation and fine frequency offset estimation." INTEL-1012 at 115.

73. The HT-SIG "consists of two OFDM symbols: HTSIG1 and HTSIG2." INTEL-1012 at 133. The bit maps for the two symbols are depicted below and described in the proposal. *See* INTEL-1012 at 133-37.

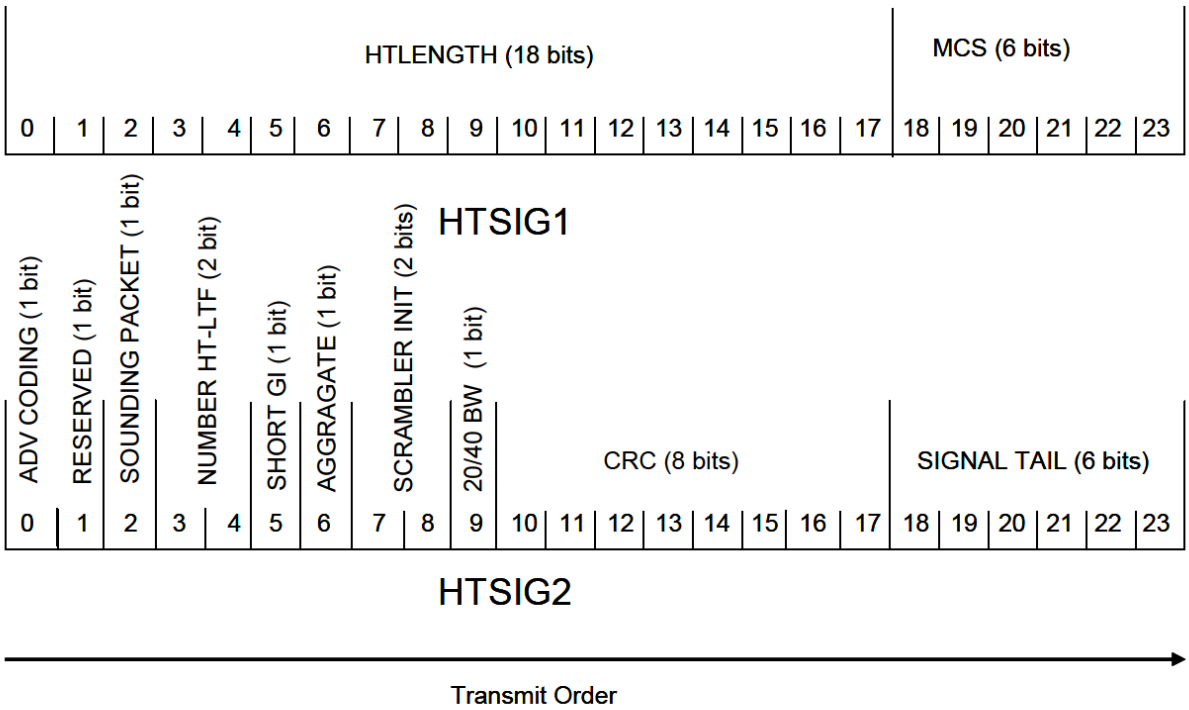


**Figure 62: HT SIGNAL FIELD (HTSIG1 and HTSIG2) bit assignment**

INTEL-1012 at 134. In the TGn Sync proposal, "BPSK modulation is used for the L-SIG and HT-SIG, with code rate ½ resulting in 6 Mbit/s." INTEL-1012 at 131. Thus, the 24 bits of HTSIG1 are coded into 48 bits and sent in one OFDM symbol, and the 24 bits of HTSIG2 are coded into 48 bits and sent in another OFDM symbol, both BPSK modulated.

74. The proposal notes that "a HT receiver will not a-priori know whether a legacy packet is being received or a HT packet." INTEL-1012 at 121. The proposal builds in "two mechanisms for signaling a HT transmission: (a) send the HT-SIG as a BPSK signal on the quadrature axis, instead of on the in-phase axis, and (b) invert the polarity of the pilots in the HT-SIG with respect to the pilots in the L-SIG. These two mechanisms allow an auto-detect of a HT transmission." INTEL-1012 at 121.

75. The January 2005 TGn Sync proposal explains that, "[d]ue to the susceptibility of a wireless link to multipath fading, especially in a MIMO channel, our proposal introduces two optional techniques for improving the robustness of the link between the transmitter and the receiver, with the aim to keep the client (station) configuration low-cost and low-power[.]" INTEL-1012 at 110. The two techniques are "Transmitter beamforming" and "Advanced channel coding." INTEL-1012 at 110. "Beamforming-MIMO can achieve higher throughput than basic MIMO at same SNR, or conversely, higher range at the same data rate." INTEL-1012 at 147-48.

76. Beamforming requires channel state information. *See* INTEL-1012 at 147-48. The channel state information is gathered by the transmitter first requesting that the receiver send a "sounding packet." INTEL-1012 at 147; *see*

*also* INTEL-1012 at 118. The channel state information is extracted from the sounding packet and used to calculate the required beamforming matrix for the transmitter. INTEL-1012 at 147-48. The transmitter data path with beamforming capability included is depicted below.

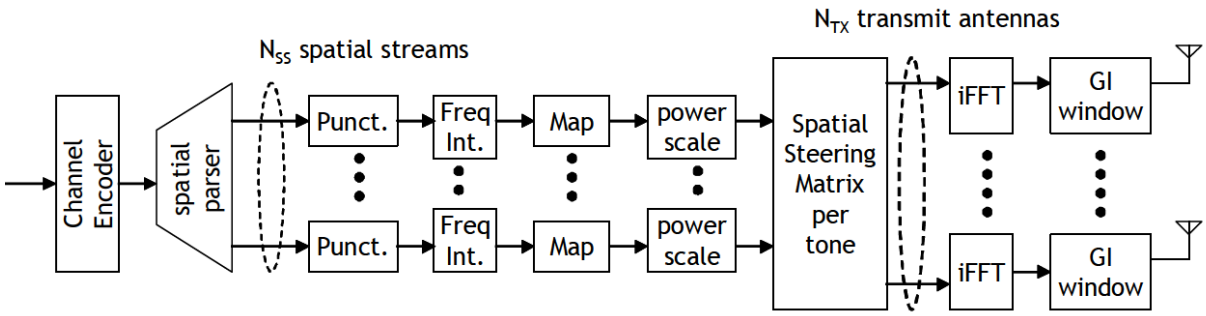


**Figure 53: Transmitter Datapath with option to perform spatial shaping**

INTEL-1012 at 117.

77. Another description summarizing TGn Sync beamforming is provided by Gast: "Two optional modes take advantage of information learned about the radio channel, which is referred to as 'closed-loop' operation. TgnSync devices send 'sounding' frames to each other to measure the performance of the link. Based on the information gleaned from sounding and calibration, *beamforming* can be used to boost signal quality. Higher signal quality means that a given data rate can be used at a longer range. For a given signal-to-noise ratio, a beamformed transmission can carry more data." AXW-2015 at 334.

### 2. WWiSE Proposals and July 2005 WWiSE (INTEL-1006)

78. The July 2005 WWiSE proposal was also based on a MIMO OFDM PHY and provided for mandatory data payload communication up to 135 Mbps, with optional support up to 540 Mbps. INTEL-1006 at 55. This was achieved with two mandatory transmit antennas, with optional support for three or four transmit antennas. *See* INTEL-1006 at 55. 20 MHz channel operation was mandatory, while 40 MHz channel operation was optional. *See* INTEL-1006 at 55. July 2005 WWiSE provided for a PLCP frame format that could be used in a network with legacy devices, called mixed-mode, but also one that could be used when all devices implemented the new standard, called greenfield mode. *See* INTEL-1006 at 58-60. In greenfield mode, fewer preamble sequences are transmitted and there is no SIGNAL-MM field, which conveys the legacy 802.11a SIGNAL information and is not needed if all devices implement the new standard. *See* INTEL-1006 at 58-60, 71. The proposal also could use LDPC coding. *See* INTEL-1006 at 74. A number of other improvements to legacy 802.11 are described throughout. *See generally* INTEL-1006.

79. Unlike legacy 802.11a/g, the July 2005 WWiSE proposal used 54 data subcarriers with only 2 pilot subcarriers in the 20 MHz mode. INTEL-1006 at 64.

80. The greenfield PPDU format for two antennas is depicted below for two transmit antennas in 20 MHz channelization (as well as one or two transmit antennas in 40 MHz channelization).

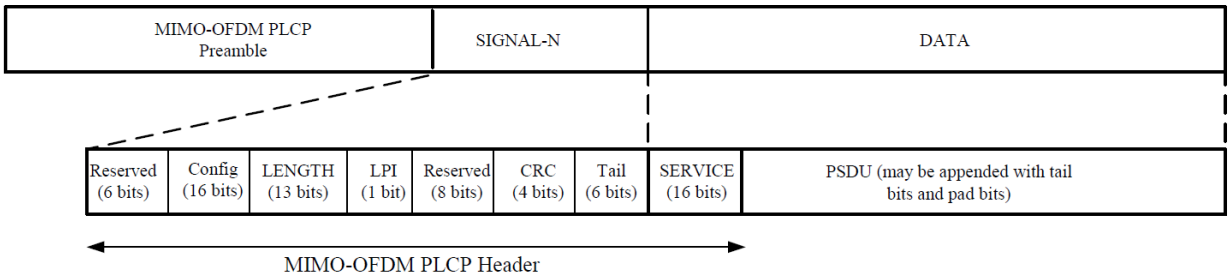


**Figure 001 – PPDU frame format: Greenfield access in the 1TX (40 MHz) and 2TX (20 and 40 MHz) modes**

INTEL-1006 at 58. The corresponding mixed-mode PPDU is depicted below. It adds another MIMO-OFDM PLCP preamble, followed by the SIGNAL-MM field, to the front of the greenfield PPDU.

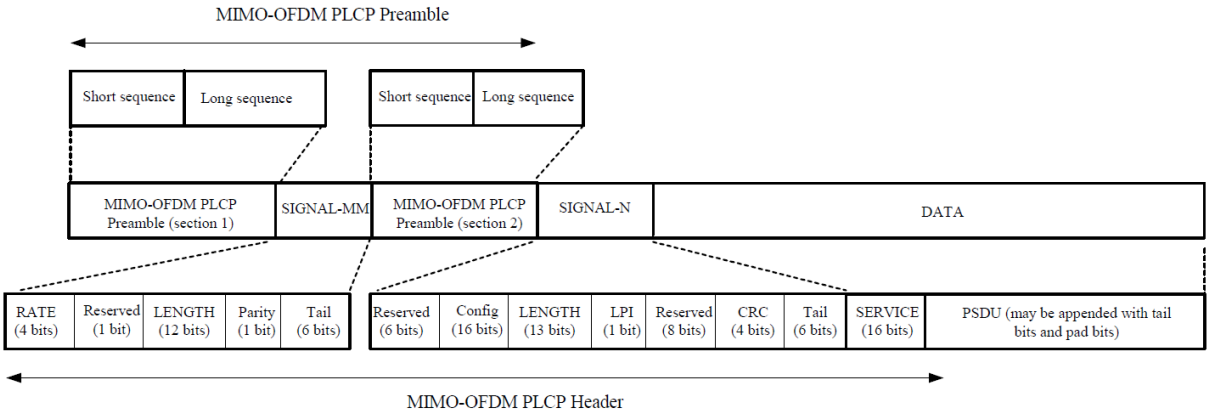


**Figure 003 – PPDU frame format: Mixed-mode access in the 1TX (40 MHz) and 2TX (20 and 40 MHz) modes**

INTEL-1006 at 59. The MIMO-OFDM PLCP preamble(s), SIGNAL-MM, and SIGNAL-N fields are transmitted from both antennas with a cyclical shift. *See* INTEL-1006 at 65-71. SIGNAL-MM is the same as the 802.11a/g legacy

SIGNAL field, while the SIGNAL-N field specifies all configuration and length-related parameters associated with the PPDU transmission. *See* INTEL-1006 at 58. The MIMO-OFDP PLCP preamble consists of short and long training sequences for synchronization and channel estimation accuracy. *See* INTEL-1006 at 65-66.

81. The SIGNAL-N (or SIG-N) "is composed of a single MIMO-OFDM symbol." INTEL-1006 at 69. The bit map for the single symbol is depicted below and described in the proposal. *See* INTEL-1006 at 69-70.

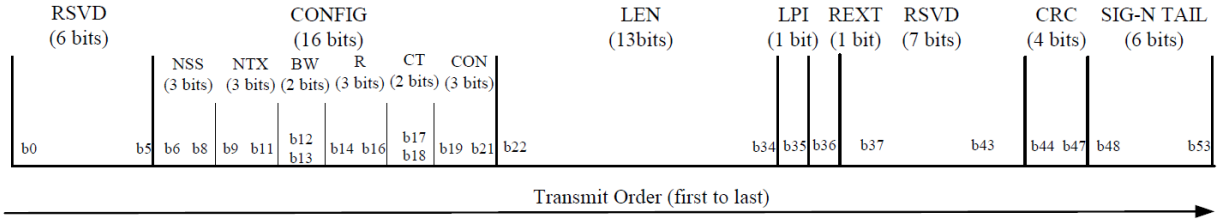


**Figure 017 – SIG-N field bit assignment**

INTEL-1006 at 70. In the July 2005 WWiSE proposal for the mandatory 20 MHz modes, "the encoding of the single SIG-N MIMO-OFDM symbol shall be performed with QPSK modulation of the subcarriers of the first antenna and shall use convolutional coding at R = ½." INTEL-1006 at 70. Because QPSK is used (2 bits per symbol), and there are 54 data subcarriers, even when the 54 bits are coded into 108 bits, they still can be sent in a single OFDM symbol.

82. The Petition states that "July 2005 WWiSE adds an extended range (ER) capability for 802.11n compliant devices," and "added a one-bit field to the SIG-N field, the REXT bit, to indicate whether the device was operating in standard configuration or ER configuration." 1135-Petition at 15, 17; 1136-Petition at 16-17, 18; 1137-Petition at 16, 18; 1138-Petition at 16, 18; 1139-Petition at 16-17, 18; 1140-Petition at 16-17, 18. The Petition argues that the WWiSE discussion in the Hansen reference is based on the January 2005 WWiSE proposal. 1135-Petition at 13 n.3; 1136-Petition at 14 n.3; 1137-Petition at 14 n.3; 1138-Petition at 14 n.3; 1139-Petition at 14 n.3; 1140-Petition at 14 n.3. To the extent the Petition is saying its stated additions are the only differences between the January and July 2005 WWiSE proposals, a review of the table of contents of each shows that there are other differences. INTEL-1006 at 5-12; INTEL-1013 at 4-10. To the extent the Petition is saying that July 2005 WWiSE is the first WWiSE proposal that discusses extended range and a REXT bit, that is incorrect.

83. Reference to an extended range mode and the REXT bit appear to be first added in the March 2005 WWiSE proposal. *See, e.g.*, AXW-2028 (March

2005 WWiSE Proposal)[5] at 52-57. Notably, the cover of July 2005 WWiSE states that it adds "ER protection." INTEL-1006 at 1. I discuss why this was needed, and a necessary part of the July 2005 WWiSE extended range mode, below.

84. In July 2005 WWiSE, "Extended Range (ER) capable devices are devices which support the optional Extended Range MCS, in addition to the Normal Range (NR) MCS, and the long SIG-N field format, as defined in section 20.3.4." INTEL-1006 at 50. The optional ER mode must be used with NTX-STBC modes and only using the BPSK rate ½ modulation mode. INTEL-1006 at 69 ("The extended communication range configuration is only used with the optional NTX-STBC modes (described in subclause 20.3.5.10) and only with rate-1/2 encoding using BPSK modulation."). Additionally, in order to allow for there to be both ER and NR capable devices, an "ER beacon" and "a new set of protection rules" must also be added to the protocol. INTEL-1006 at 50. I address the above requirements of the ER mode separately below.

[5] This document is on the IEEE Mentor website as DCN 05/0149r0 despite the information in the header of the file. As the file shows at least some tracked changes, it seems the authors had not yet updated the header information.

85. Aside from Clause 9.15 on page 50, "ER MCS" does not appear in July 2005 WWiSE. Given the abbreviations, it is clear it means Extended Range Modulation and Coding Scheme. *See* INTEL-1006 at 15. This appears to be a reference to the modulation and coding provided on page 79 of July 2005 WWiSE, as this is the clause referenced above regarding NTX-STBC modes with which the ER mode must be used. Thus, only the 6.75 Mbps BPSK row from the table of page 79 can be used in ER mode. As explained above in Section V.B, BPSK is the most robust modulation mode of those available in 802.11 and July 2005 WWiSE. This modulation mode is used for encoding the data portion of the frame when the number of transmit antennas is greater than the number of transmitted spatial streams and is not applied to the header. *See* INTEL-1006 at 78. It uses Space-Time Block Coding, which is a technique that requires transmission of two symbols that have specific relationships between them. *See* INTEL-1006 at 78-82. The net effect is a diversity gain, which accounts for the extended range referred to in the proposal.

86. Again, aside from Clause 9.15 on page 50, the term "long SIG-N" does not appear in July 2005 WWiSE, but Clause 9.15 points to Clause 20.3.4. There, July 2005 WWiSE states that "[i]n the extended communication range configuration (ER), SIG-N is composed of two consecutive MIMO-OFDM

symbols: The SIG-N MIMO-OFDM symbol is followed by a second MIMO-OFDM symbol,denoted [sic] as ER-SIG-N." INTEL-1006 at 69. An example of the frame in the two transmit antenna, 20 MHz, greenfield mode is depicted below.

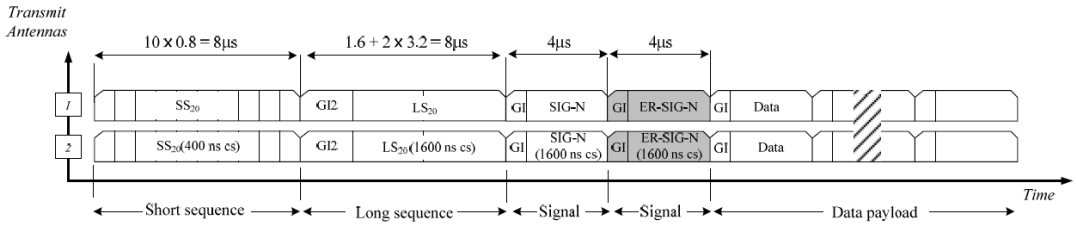


**Figure 007 – MIMO-OFDM Training structure for $N_{TX}$ = 2, 20 MHz, greenfield operation. The shaded field indicates the optional duplicate SIG-N for extended range communication.**

INTEL-1006 at 67. As the figure states, "[t]he shaded field indicates the optional duplicate SIG-N for extended range communication." The entire SIG-N field is duplicated as the ER-SIG-N field, though a permutation is applied to the ER-SIG-N relative to the SIG-N. *See* INTEL-1006 at 69. Additionally, the REXT bit is set in SIG-N and ER-SIG-N. *See* INTEL-1006 at 69. In the mandatory 20 MHz mode depicted above, the ER-SIG-N would also be modulated with QPSK rate ½ code like the SIG-N field, as described above. *See* INTEL-1006 at 70. As noted above, the ER-SIG-N is not used on its own. Instead, it is only used when using the NTX-STBC BPSK rate ½ mode.

87. To enable the ER mode, July 2005 WWiSE defines "mandatory" rules for beacon generation "for ER-capable" access points. INTEL-1006 at 52. Generally, in 802.11, beacons are used to announce the existence of an 802.11

network at regular intervals and provide information about how to communicate on that particular network. *See, e.g.*, AXW-2015 at 106. In particular, "[t]he area in which Beacon frames appear defines the basic service area." AXW-2015 at 106. In July 2005 WWiSE, the ER beacon is to be transmitted "using an ER MCS," meaning that the data portion of that frame containing the beacon is sent using the NTX-STBC BPSK rate ½ mode. INTEL-1006 at 50. Because the point of the mode and the ER MCS is that it can be understood at extended range, the ER beacon can also be received at a greater distance by an ER device that can understand the NTX-STBC BPSK rate ½ mode.

88. What this means is, there are nodes in the wireless network that can send and receive ER frames that may not be able to receive NR frames. According to July 2005 WWiSE, this creates a new "hidden node problem" with its attendant problems such as costly retransmissions. INTEL-1006 at 46; *see supra* Section V.F. Thus, July 2005 WWiSE defines "protection mechanisms" that are "mandatory for NR and ER-capable" devices. INTEL-1006 at 46. The protection mechanisms involve a series of CTS and/or RTS messages to ensure NR devices know to be silent during ER transmissions and vice versa. *See* INTEL-1006 at 46-48. Similar to protection mechanisms added for 802.11g, "[t]hroughput may suffer a significant hit as a result of this exchange." AXW-2015 at 300. This is because

valuable air time needs to be spent on making sure the medium is clear to avoid collisions. *See supra* Section V.F.

89. The requirements above were presented during TGn meetings. For example, a presentation from July 2005 regarding the WWiSE proposals describes "4 main features that need to be ensured to grant range extension." INTEL-1030 at 22. These track those I describe above. First is "Appropriate PHY modes," which refers to the NTX-STBC modes I describe above. *See* INTEL-1030 at 22 ("Allow a number of spatial streams lower than the number of TX antennas!"). These provide a diversity gain and are responsible for the extended range of useful data. Second is "Beacon," which refers to the ER beacon that I describe above. As the presentation states, the ER beacon "enable[s] association at extended range (ER): legacy beacon doesn't allow extended range stations to associate." INTEL-1030 at 22. Third is "Coexistence," which refers to the protection mechanisms that I describe above. As the presentation explains, "[e]xistence of two classes of devices (ER/NR) creates an opportunity for hidden nodes" because at the extended range, "the ER devices can no longer communicate with the AP at the non-ER rates (NR rates)" and will therefore "miss NR 'protective frames' e.g. RTC/CTS (any frame with a non-zero DUR field value)." INTEL-1030 at 22, 24. As the last item on that document, there is "Enable robust signaling," which refers to the repeated

SIGNAL-N field. INTEL-1030 at 22. Thus, the repeated header field is just one part of what July 2005 WWiSE defines as necessary for its extended range mode to work.

### 3. IEEE 802.11n

90. The completed 802.11n standard was published by the IEEE in October 2009. *See* INTEL-1017 (802.11n) at Cover. While the 802.11n standard does contain aspects from the various TGn Sync and WWiSE proposals from TGn, it notably does not include something like the ER mode, along with its mandatory protection, beacon, long SIG-N, and REXT bit, as described in July 2005 WWiSE. While not identical, the 802.11n standard follows the HT-SIG1/HT-SIG2 approach from TGn Sync proposals rather than that of July 2005 WWiSE. *See* INTEL-1017 at 275-77. *See, e.g.*, INTEL-1017 at 275-78. It does, however, include beamforming like in the TGn Sync proposals. *See, e.g.*, INTEL-1017 at 303-13.

## VI. Overview of the Art and Asserted Combinations

### A. Hansen (INTEL-1005)

91. Hansen is titled "Method and System for Compromise Greenfield Preambles for 802.11n." Hansen places the context of its disclosure into the TGn working group that I have discussed above in Section V.G, explaining that the working group was "chartered to develop a standard to enable WLAN devices to achieve throughput rates beyond 100 Mbits/s." INTEL-1005 at [0008]-[0009].

Hansen explains that a number of proposals had emerged, including "proposals from TGn Sync, which is a multi-industry group working to define proposals for next generation wireless networks that are to be submitted for inclusion in IEEE 802.11n," as well as from WWiSE. INTEL-1005 at [0009], [0033]. I have discussed aspects of proposals from these groups above in Section V.G. Hansen states that "[c]urrent proposals from TGn Sync may not provide a mechanism to support greenfield access. As such, mixed mode access communications based on current TGn Sync may be required to comprise information that may not be required in greenfield access communications." INTEL-1005 at [0033]. I have generally described mixed mode and greenfield access in Sections V.G.1 to V.G.2 above. To briefly recap, mixed mode assumes both 802.11n devices and "legacy" 802.11 devices on the same wireless network, while greenfield mode assumes that all devices are 802.11n devices. INTEL-1005 at [0032]. Hansen's primary goal is to define greenfield modes for the TGn Sync proposals. *See, e.g.*, INTEL-1005 at Title, Abstract, [0007]-[0008], [0027], [0032]-[0033], [0087], [0096]-[0097], [0117].

92. Hansen describes its reasoning for adding greenfield mode to the TGn Sync proposals, including through examples. Hansen first explains that "[t]he utilization of greenfield access may reduce the portion of time required to transmit

data due to overhead comprising preamble fields and header fields. This may enable higher data throughput rates to be achieved. This may further enable more robust transmission of data by enabling comparable data rates to be maintained while reducing the coding rate of encoded transmitted data. The reduction of the coding rate may enable comparable data rates to be maintained for transmission via RF channels characterized by lower SNR while still achieving desired target levels of packet error rates." INTEL-1005 at [0027]. The 100 Mbps throughput that TGn was trying to obtain was after removing protocol overhead, including preambles and headers. While necessary, these elements use air time but do not send any user data. The idea of the greenfield mode was to eliminate preambles and headers that only legacy devices required, as to reduce the overhead and improve overall throughput.

93. Hansen Figure 4a "shows exemplary training fields and header fields for mixed mode access in accordance with a TGn Sync proposal." INTEL-1005 at [0061]. Relatedly, Figure 4b "shows an exemplary L-SIG header field for mixed mode access in accordance with a TGn Sync proposal." INTEL-1005 at [0066]. The L-SIG header field is "a legacy signal field." INTEL-1005 at [0061]. And Figure 4c "shows an exemplary HT-SIG header field for mixed mode access in accordance with a TGn Sync proposal." INTEL-1005 at [0067]. Hansen uses a

duration of 4 μs as the OFDM symbol time, consistent with legacy 802.11 standards and the 802.11n proposals. *See* INTEL-1005 at [0062]. Hansen explains that each of the "legacy short training field (L-STF)" is the "equivalent in time duration to 2 IEEE 802.11n OFDM symbols and corresponding guard interval times" and each of the "legacy long training field (L-LTF)" is also the "equivalent in time duration to 2 IEEE 802.11n OFDM symbols and corresponding guard intervals." INTEL-1005 at [0061]-[0062]. The L-SIG is "equivalent in time duration to 1 IEEE 802.11n OFDM symbol and corresponding guard interval," and the HT-SIG is the "equivalent in time duration to 2 IEEE 802.11n OFDM symbols and corresponding guard intervals." INTEL-1005 at [0062]. There are also high throughput short training fields and high throughput long training fields (HT-STF and HT-LTF respectively) with durations of 2.4 μs and 7.2 μs respectively. INTEL-1005 at [0062]. Thus, the legacy portion of the preamble (L-STF, L-LTF, and L-SIG) occupies 5 OFDM symbol times. *See* INTEL-1005 at [0070]. In an exemplary PPDU with 1,500 binary octets, Hansen explains that the legacy portion accounts for 21% of the air time. INTEL-1005 at [0071]. Eliminating this portion allows the effective data rate to go up because the same data can be sent in less air time. *See* INTEL-1005 at [0071]-[0072] (158 Mbps vs. 125 Mbps). Alternatively, after eliminating the legacy portion, the coding rate could be reduced, making the

signal more robust, while still obtaining a data rate similar to that achieved when the legacy portion is included. *See* INTEL-1005 at [0071], [0073] (decreasing code rate from ¾ to 2/3 but achieving 150 Mbps vs. 125 Mbps), [0074] (decreasing code rate from ¾ to ½ but achieving 120 Mbps vs. 125 Mbps), [0075].

94. Hansen's Figure 6a, relied upon in the Petition, essentially implements the above description by eliminating the legacy portion from Figure 4a. Hansen states that in Figure 6a, the "Signal*-N fields 612, 632, and 652 may be represented as shown in FIG. 4c." INTEL-1005 at [0089]. As noted above, Figure 4c "shows an exemplary HT-SIG header field for mixed mode access in accordance with a TGn Sync proposal." INTEL-1005 at [0067]. As explained above in Section V.D, preambles need to be sent before information-bearing portions of a packet in order to prepare the receiver to demodulate the signal. A POSA would have understood that that is why Hansen does not simply remove the legacy portion from Figure 4a, as that would make the HT-SIG, which carries information bits, the first part of the signal. Instead, the preamble is moved ahead of HT-SIG in Figure 6a, as depicted below, showing packets sent from different transmit antennas. Notably, as shown in Figure 6a, the Signal*-N/HT-SIG field is sent from each transmitting antenna. *See* INTEL-1005 at [0087], Fig. 6a. So long as there is a sufficient amount of training ahead of the Signal*-N field, it may be

placed ahead of some training symbols, as it is done in Figure 6b. The training symbols can mimic those from the legacy 802.11 standards. *See* INTEL-1005 at [0097].

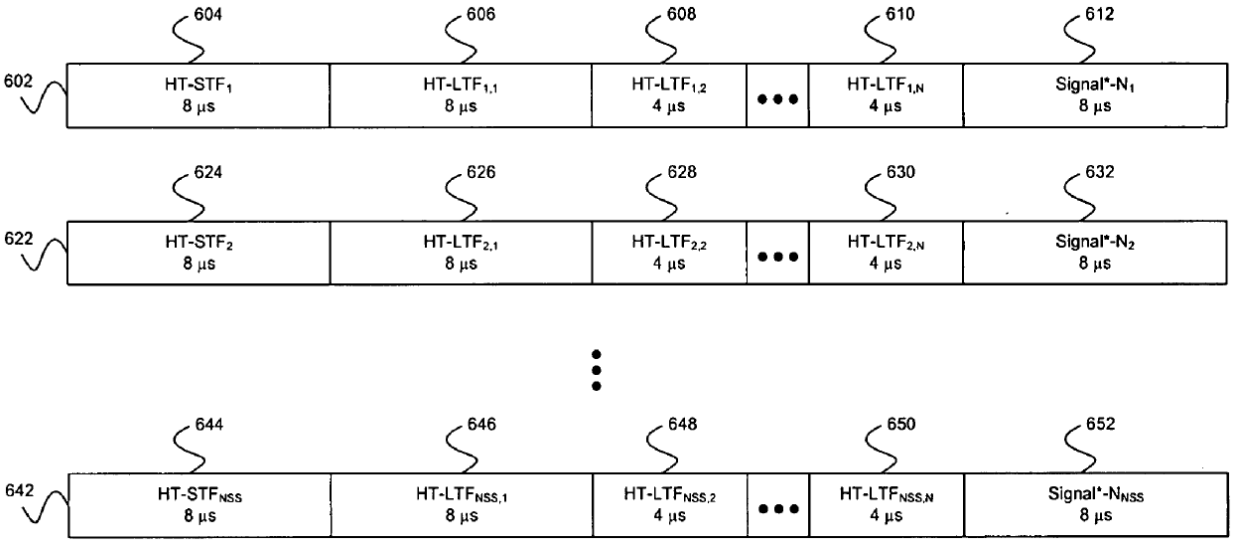


95. In this way, Hansen Figure 6a does not incorporate anything substantive from Hansen Figures 5a, 5b, and 5c. Hansen Figure 5b is not used at all because Hansen Figure 4c is used instead. And the ordering of the training symbol fields in the figure above is different from Hansen Figure 5a and Hansen Figure 5c. With respect to the PPDU format, Hansen does not try to mix and match aspects of the various TGn Sync and WWiSE proposals, aside from including a greenfield mode.

96. Hansen describes an exemplary MIMO transceiver with which its greenfield preamble may be used, depicted below. *See* INTEL-1005 at [0041], Fig. 2b. A transmit chain is generally depicted toward the top (200) and a receiver

chain is generally depicted toward the bottom (201). There is also a processor (240) and a baseband processor (242). The processor is described as performing tasks at the lower layers of the network stack such as the PLCP and Physical Medium Dependent (PMD) functions, described above in connection with the 802.11 standards discussion. *See* INTEL-1005 at [0043]. The baseband processor analyzes received data and performs MAC related functions like those mentioned above in connection with the 802.11 standards discussion. *See* INTEL-1005 at [0043].

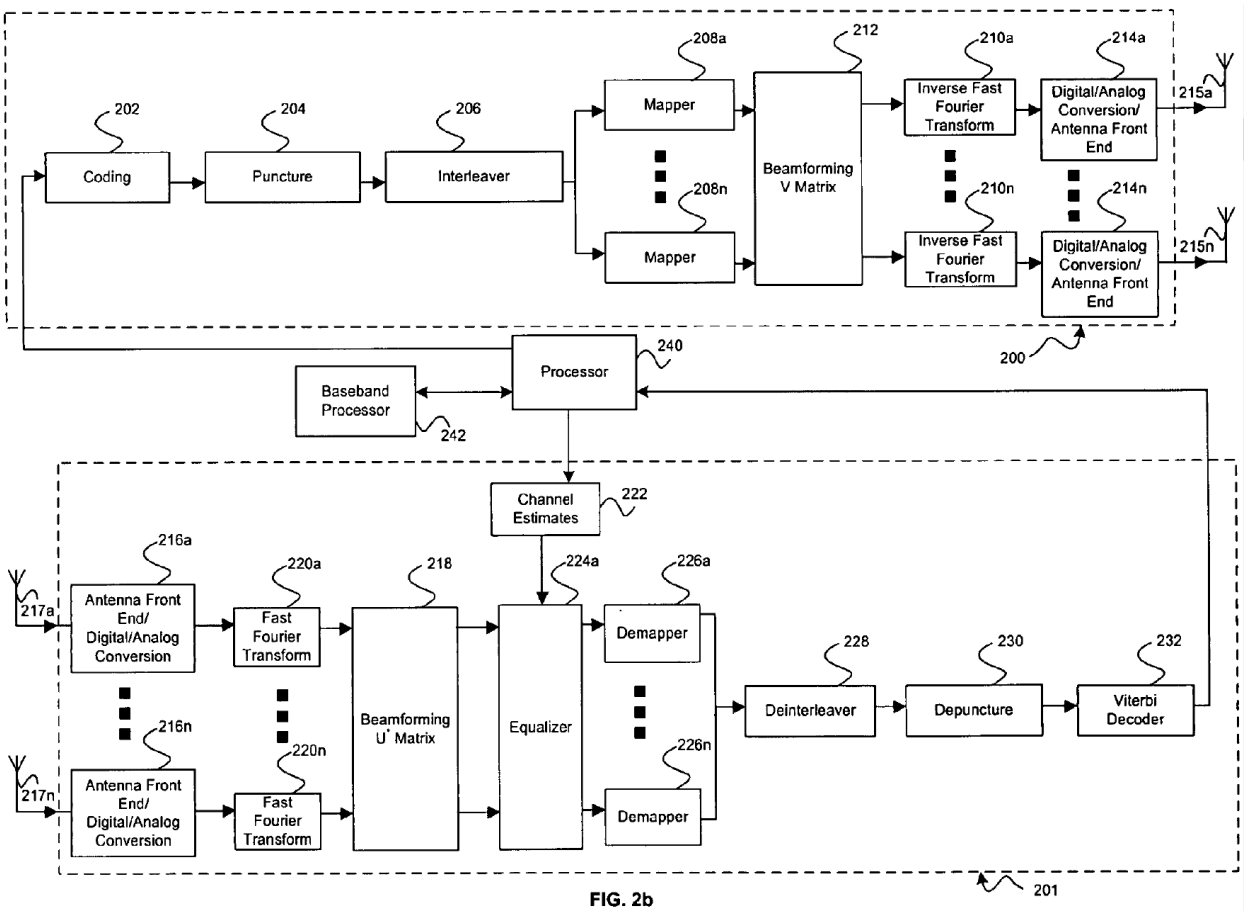


FIG. 2b

97. The transmitter includes "a coding block 202, a puncture block 204, an interleaver block 206, a plurality of mapper blocks 208a, . . . , 208n, a plurality of inverse fast Fourier transform (IFFT) blocks 210a, . . . , 210n, a beamforming V matrix block 212, and a plurality of digital to analog (D/A) conversion and antenna front end blocks 214a, . . . , 214n." INTEL-1005 at [0041]. The coding block applies a forward error correction such as binary convolutional coding. INTEL-1005 at [0044]. As described above in Section V.B, this adds redundant bits to allow for potential recovery from errors created in the channel. The puncture block can remove some of those redundant bits by changing, for example, a rate ½ code into a rate 2/3 code. INTEL-1005 at [0045]. The interleaver rearranges bits, which combats against burst errors by spreading out consecutive bits. INTEL-1005 at [0045]. The bits from the interleaver are split to separate streams with each stream having a mapper block. INTEL-1005 at [0045]-[0046]. The mapper takes bits and creates modulation symbols (e.g., QPSK). INTEL-1005 at [0046].

98. The mapped symbols from the streams are fed to a beamforming V matrix block that generates output signals that, when emitted from the plurality of antennas, combine together to create an optimized beam pattern with directivity or gain in a particular direction (i.e., toward the receiver). I discussed beamforming above in Section V.G.1 in connection with the TGn Sync proposals. The Hansen

Provisional also explains this: "Smart antenna systems combine multiple antenna elements with a signal processing capability to optimize the pattern of transmitted signal radiation and/or reception in response to the communications medium environment. The process of optimizing the pattern of radiation is sometimes referred to as 'beamforming,' which may utilize linear array mathematical operations to increase the average signal to noise ratio (SNR) by focusing energy in desired directions." INTEL-1011 at [05].[6] As a POSA would have understood (*see* discussion of beamforming above in Section V.G.1 and in Section V.D regarding SNR and range), beamforming enhances the range of a transmitted signal.

99. The signal outputs from the beamforming block are fed to the IFFT blocks that place the mapped and beamformed symbols onto subcarriers of OFDM symbols. INTEL-1005 at [0048]. The signals are then converted from digital to analog and ultimately transmitted by the plurality of antennas. INTEL-1005 at [0049].

---

[6] The Hansen Provisional is incorporated by reference into Hansen. INTEL-1005 at [0001], [0006].

100. The receive chain effectively works in reverse by receiving the signals over the air at the plurality of antennas, down-converting the signals to baseband, and converting the analog signals to digital. INTEL-1005 at [0050]. FFT blocks convert the received OFDM signals to the frequency domain and the various subcarriers. INTEL-1005 at [0051]. The modulated subcarriers are demodulated to extract symbols. INTEL-1005 at [0051]. The beamforming block U* effectively removes the transform applied by the beamforming V block in the transmitter, and then feeds the output to an equalizer that uses the channel estimate to reverse some of the channel effects. INTEL-1005 at [0052]-[0053]. Demapper blocks then convert the equalized symbols to bit streams. INTEL-1005 at [0054]. The bits streams are then combined and fed to the deinterleaver to reverse the rearranging performed by the interleaver. INTEL-1005 at [0055]. The depuncture block adds null bits to the stream prior to feeding the stream to a Viterbi decoder that can decode to the original uncoded bit stream, which is fed to the baseband processor. INTEL-1005 at [0055]-[0056].

101. As noted and described above, the exemplary transceiver is a MIMO transceiver. As described above in Section V.E, MIMO provides for a number of diversity benefits. The Hansen Provisional explains this as well. First, the Hansen Provisional describes a MIMO transmission scheme that includes beamforming,

like the one described above in connection with Hansen Figure 2b: "Current transmission schemes in MIMO systems typically fall into two categories: data rate maximization, and diversity maximization. Data rate maximization focuses on increasing the aggregate data transfer rate between a transmitting mobile terminal and a receiving mobile terminal by transmitting different spatial streams from different antenna. One method for increasing the data rate from a transmitting mobile terminal would be to decompose a high bit rate data stream into a plurality of lower bit rate data streams such that the aggregate bit rates among the plurality of lower bit rate data streams is equal to that of the high bit rate data stream. Next, each of the lower bit rate data streams may be mapped to at least one of the transmitting antennas for transmission. In addition, each signal comprising one of the lower bit rate data streams is multiplicatively scaled by a weighting factor prior to transmission. The plurality of multiplicative scale factors applied to the plurality of signals comprising the lower bit rate data streams may be utilized to form the transmitted 'beam' in the beamforming technique. An example of a data rate maximization scheme is orthogonal frequency division multiplexing (OFDM), in which each of the plurality of signals is modulated by a different frequency carrier signal prior to mapping and multiplicative scaling. OFDM transmission may be resistant to multipath fading in that a portion, but most likely not all, of the data

transmitted may be lost at any instant in time due to multipath fading." Hansen Provisional at [10]. Notably, Figure 1 of the Hansen Provisional is nearly the same as Hansen Figure 2b.

102. The Hansen Provisional also explains "diversity maximization" with MIMO systems: "Diversity maximization focuses on increasing the probability that a signal transmitted by a transmitting mobile terminal will be received at a receiving mobile terminal, and on increasing SNR of received signals. In diversity maximization, multiple versions of the same signal may be transmitted by a plurality of antenna. The case in which a transmitting mobile terminal is transmitting the same signal via all of its transmitting antenna may be the pure spatial diversity case in which the aggregate data transfer rate may be equal to that of a single antenna mobile terminal. There is a plurality of hybrid adaptations of the data rate and spatial diversity maximization schemes which achieve varying data rates and spatial diversities." Hansen Provisional at [11]. Hansen's transceiver may be classified as a hybrid one, because it is set up for data rate maximization using beamforming and potentially different spatial streams, as described above. But it also uses the "pure spatial diversity case" in, for example Figure 6a, which the same Signal*-N is transmitted on the different streams. This

provides a diversity gain for the Signal*-N field, which can also be considered a range extension for that field.

### B. July 2005 WWiSE (INTEL-1006)

103. I have already described the July 2005 WWiSE reference above in Section V.G.2 and incorporate that discussion herein.

### C. Choi (INTEL-1008)

104. Choi is titled "Repetition Coding for a Wireless System." Choi was filed September 17, 2003. Unlike Hansen or July 2005 WWiSE, Choi makes no mention of MIMO, beamforming, or other antenna diversity techniques. As Gast reports, by 2005, even basic antenna diversity (i.e., selecting "the signal from the antenna with better reception") was a "common method of minimizing multipath fading," and that "[s]everal wireless LAN vendors have built multiple antennas into wireless network cards." AXW-2015 at 551. Further, "[a]ntenna diversity is recommended by the 802.11 standard." AXW-2015 at 551. Gast specifically notes that antenna diversity should be considered "[f]or environments with large amounts of interference," or noisy environments. AXW-2015 at 551. And more advanced antenna diversity with separate RF chains and Maximal Ratio Combining (MRC) were known and researched early on as well. *See, e.g.*, INTEL-1025 at 133-34; AX-2027. Choi takes advantage of none of these technologies that would have been well known to a POSA at the priority date of the patents.

105. With that background, Choi seeks to modify 802.11a/b/g systems, which were generally single antenna systems, for communication over an extended range or in noisy environments, but without using any of the techniques mentioned above. *See* Choi at [0002]. Because of that, Choi immediately recognizes that its solution will come with "reduced data rates." Choi at [0002]. Choi uses repetition in a variety of embodiments (of mapped symbols, or of bits; in time or frequency; before or after interleaving) to achieve a more robust link. *See, e.g.*, Choi at [0013]. The receiver then combines signals with repeated values and uses the combined signal to recover the originally sent value. *See* Choi at [0014].

### D. The Combination of Hansen and July 2005 WWiSE

106. To guide my discussion below, I provide a brief overview of the relevant parts of the Petition's combination of Hansen and July 2005 WWiSE. The challenged claims recite "a first packet type" and a "second packet type." '361 patent at cl. 1; '707 patent at cl. 1; '449 patent at cl. 1; '459 patent at cl. 1; '272 patent at cl. 1, cl. 11. The Petition advances that these packet types are met, respectively, by what the Petition calls the NR Greenfield PPDU and the ER Greenfield PPDU. *See* 1135-Petition at 28-29; 1136-Petition at 28-29; 1137-Petition at 28-29; 1138-Petition at 28-29; 1139-Petition at 31-32; 1140-Petition at

30-32. The figure below is from page 29 of the 1135-Petition, depicting the two proposed PPDUs.

**NR Greenfield PPDU ("*First Packet Type*")**
**(Combined Hansen Figure 3a and Excerpt from Figure 6a)**

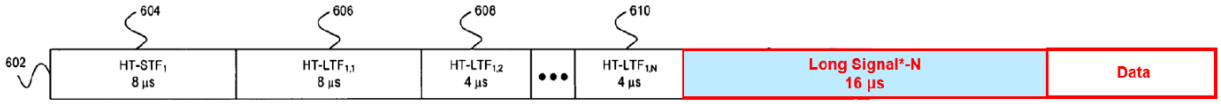


**ER Greenfield PPDU ("*Second Packet Type*")**
**(Combined Hansen Figure 3a and Excerpt for Figure 6a**
**as modified by July 2005 WWiSE)**

107. The above figures refer to Hansen Figure 3a and Figure 6a. As Dr. LaPorta explains, the NR Greenfield PPDU figure "combines a single stream from Hansen's Figure 6a which illustrates only the preamble and header fields of a PPDU and combines it with Hansen's Figure 3a PPDU to show the omitted data field (indicated in red)." 1135-INTEL-1003 ¶87; 1136-INTEL-1003 ¶87; 1137-INTEL-1003 ¶87; 1138-INTEL-1003 ¶87; 1139-1140-INTEL-1003 ¶87.[7] In other

[7] The figure on page 29 of the 1135-Petition omits the red indication on the data field that is present in the corresponding figure in Dr. LaPorta's declaration.

words Figure 3a is mentioned only because Figure 6a omits the data field, which would clearly be present in the PPDU. The same is true for the ER Greenfield PPDU. 1135-INTEL-1003 ¶89; 1136-INTEL-1003 ¶89; 1137-INTEL-1003 ¶89; 1138-INTEL-1003 ¶89; 1139-1140-INTEL-1003 ¶89.

108. As described above in Section VI.A describing Hansen, Hansen states that in Figure 6a, the "Signal*-N fields 612, 632, and 652 may be represented as shown in FIG. 4c." INTEL-1005 at [0089]. Figure 4c "shows an exemplary HT-SIG header field for mixed mode access in accordance with a TGn Sync proposal." INTEL-1005 at [0067]. For the "first packet type," the Petition generally adopts Hansen Figure 6a's form. The below figure from page 30 of the 1135-Petition depicts the HT-SIG header field from Hansen Figure 4c fitting into the Signal*-N header field of Hansen Figure 6a. In this way, the Signal*-N field is comprised of the 48 bits of the HT-SIG field. Hansen notes that this field is 2 OFDM symbols, *see* INTEL-1005 at [0094], which would each have 24 bits of the HT-SIG field, which is also consistent with the description above in Section V.G.1 regarding the TGn Sync proposals. As the figure below shows, the Petition also takes this approach, breaking the Signal*-N/HT-SIG field into HT-SIG1 and HT-SIG2, each with 24 bits of the HT-SIG field, which has 48 bits total.

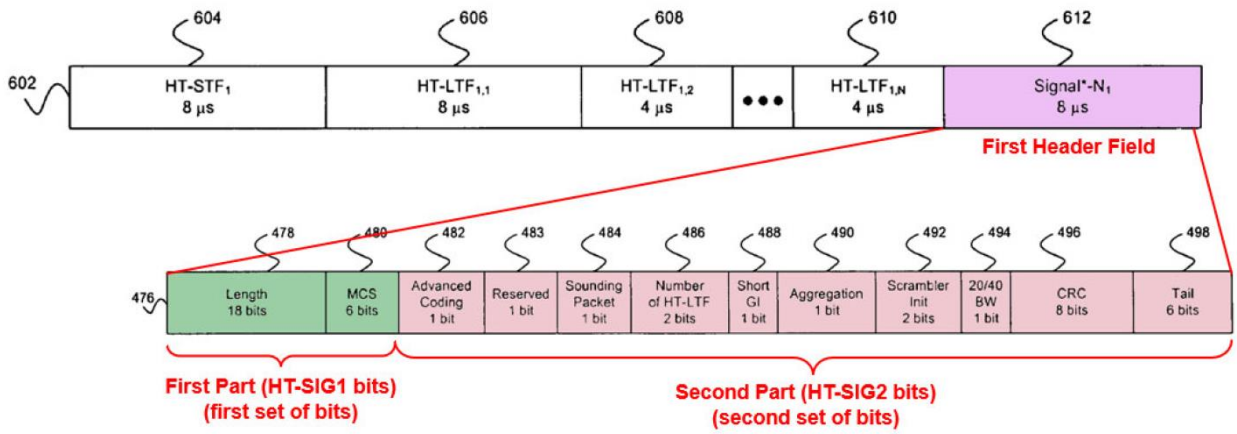


**Excerpt of Hansen, Figure 6a (top); Figure 4c (bottom)**

109. For the Petition's ER Greenfield PPDU (reproduced again below), the Petition replaces Signal*-N from its NR Greenfield PPDU with Long Signal*-N, highlighted in blue below. The Petition asserts that the Long Signal*-N field "duplicates HT-SIG1 and HT-SIG2 of Hansen's Signal*-N header field and therefore occupies 4 OFDM symbols when transmitted or received." 1135-Petition at 18-19; 1136-Petition at 19-20; 1137-Petition at 19-20; 1138-Petition at 20; 1139-Petition at 19-20; 1140-Petition at 19-20.

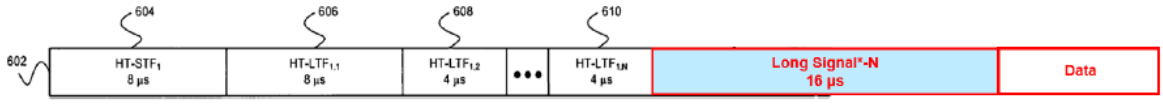


**ER Greenfield PPDU**
**(Combined Hansen Figure 3a and Excerpt from Figure 6a, as modified by July 2005 WWiSE)**

110. The Petition uses the below figures (from page 34 and page 49 of the 1135-Petition) to show the contents of Long Signal*-N according to the Petition's combination. Thus, the Petition asserts that the order would be HT-SIG1, ER-HT-SIG1 (a repeated copy of HT-SIG1), HT-SIG2, and ER-HT-SIG2 (a repeated copy of HT-SIG2). According to the Petition, the ER portions are also modified in the frequency domain by rearranging the mapped symbols on the subcarriers as described in July 2005 WWiSE. *See* 1135-Petition at 60-61; 1136-Petition at 55-57; 1137-Petition at 60-62; 1138-Petition at 55-57; 1139-Petition at 64-65; 1140-Petition at 57-59.

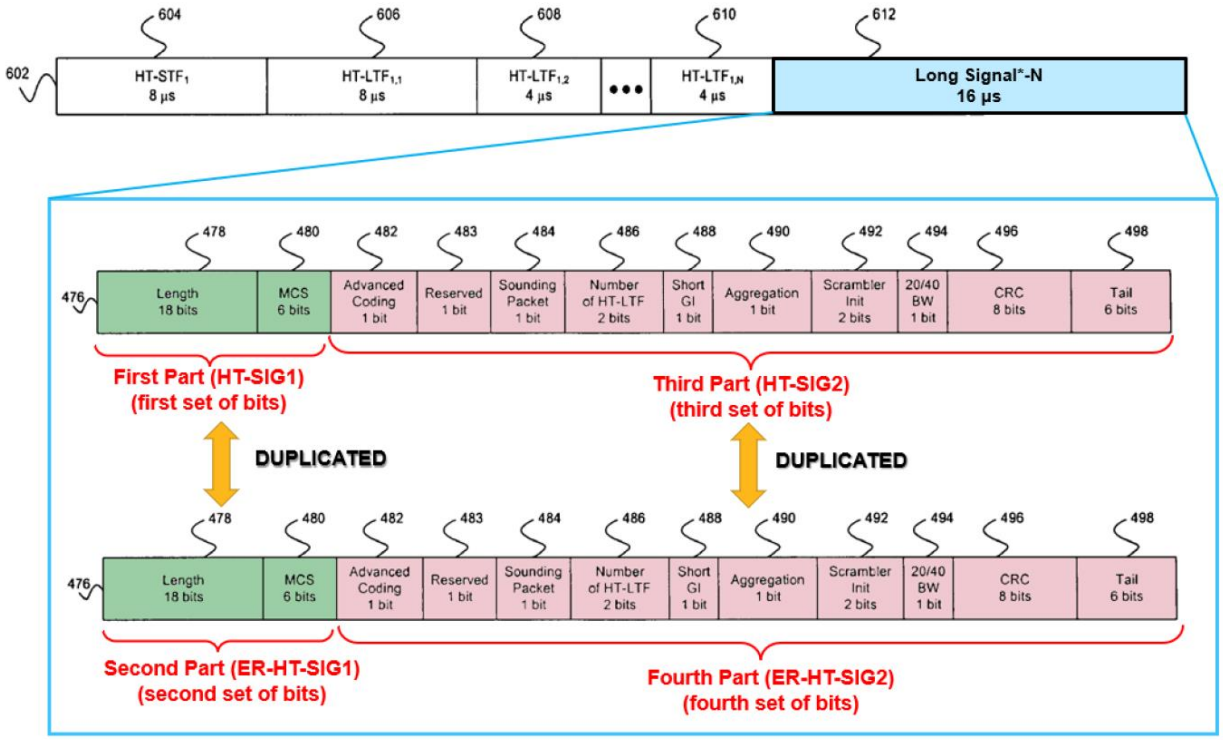


From Page 34 of 1135-Petition

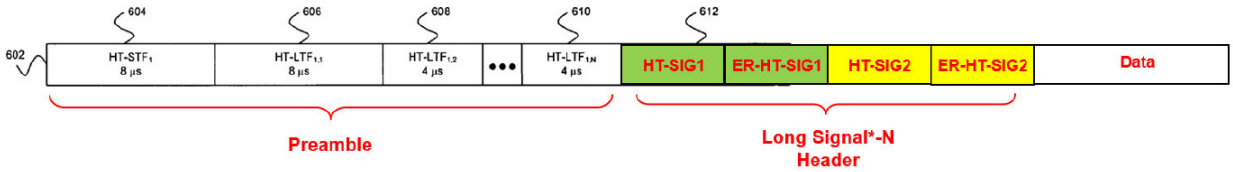


**ER Greenfield PPDU**

From Page 49 of 1135-Petition

111. I note that the symbol order in the figure immediately above is inconsistent with the teachings of July 2005 WWiSE. As explained in Section V.G.2 above, in July 2005 WWiSE, the entire SIG-N field is duplicated in the ER-SIG-N field. But rather than duplicating the entire "Signal*-$N_1$ field," or equivalently the "HT-SIG header field," the Petition breaks it in half.

## VII. A POSA Would Have Not Combined Hansen and July 2005 WWiSE as Proposed in the Petition

112. The premise of the Petition's combination is that a POSA would have taken repeated header bits from July 2005 WWiSE and add them to Hansen's greenfield preamble. From my review of the materials presented, I disagree. The Petition's approach ignores numerous details about Hansen and July 2005 WWiSE, as well as fundamental engineering associated with wireless and 802.11 networks, to arrive at the proposed combination. Below, I explain a number of reasons why a POSA would have had no motivation to make the combination as proposed in the Petition.

### A. Hansen and July 2005 WWiSE Have Different Range Capabilities

113. The Petition proposes adding repeated header bits to Hansen, but never explains why a POSA would have done that. Nor does the Petition consider why and how July 2005 WWiSE uses a repeated header. And the Petition also does not consider the differences in implementation between Hansen and July 2005 WWiSE. These details are critical to understanding whether a POSA would have been motivated to make the proposed combination. And, for the reasons explained below, a POSA would have not been motivated to make the proposed combination.

114. As explained above in Section VI.D describing the combination, the Petition relies on Hansen Figure 6a, with Signal*-N filled in with Hansen Figure 4c. This results in two OFDM symbols with 24 information bits each. Given that a POSA would have been extremely familiar with the legacy 802.11 standards, a POSA would have recognized this kind of arrangement as the same as used in the legacy 802.11 standards. As explained above in Section V.C, the header for 802.11a/g likewise had 24 information bits. In the legacy 802.11 standards, the header is always rate ½ coded and transmitted using BPSK modulation "to ensure reliable reception." INTEL-1025 at 35; *supra* Section V.C. Hansen's reference to the legacy 802.11 standards' use of "48 data-bearing subcarriers," INTEL-1005 at [0034], and use of 24 information bits to be translated into a single OFDM symbol

would have confirmed for a POSA that Hansen's Signal*-N is coded and modulated the same. Hansen does not state otherwise.

115. Moreover, as the Petition notes at page 12, Hansen Figure 4c, which is used in Figure 6a, is the "HT-SIG header field" "in accordance with a TGn Sync proposal." INTEL-1005 at [0087]. The Petition asserts that INTEL-1012 is the relevant TGn Sync proposal. *See* 1135-Petition at 11 n.2; 1136-Petition at 12 n.2; 1137-Petition at 12 n.2; 1138-Petition at 12 n.2; 1139-Petition at 12 n.2; 1140-Petition at 12 n.2. That proposal confirms that the HT-SIG header field is transmitted consistent with the legacy 802.11 standards, using rate 1/2 coding and BPSK modulation for the two OFDM symbols. *See supra* Section V.G.1. Consistent with Gast, a POSA would have recognized that "[t]he HT-SIG field is modulated conservatively," meaning rate 1/2 coding and BPSK modulation are used to ensure robustness. AXW-2015 at 337.[8]

---

[8] Gast refers here to "Q-BPSK" because TGn Sync rotates the BPSK constellation to use the Q rather than I constellation axis. *See* INTEL-1012 at 131. That rotation does not change the characteristics of BPSK that I have described in this declaration.

116. At the mandatory 20 MHz mode of July 2005 WWiSE, its comparable header is modulated and coded differently from Hansen and TGn Sync. Rather than using the most robust modulation used in 802.11 (i.e., BPSK), July 2005 WWiSE uses QPSK, as explained above. *See supra* Section V.G.2. July 2005 WWiSE uses a different number of data-bearing subcarriers and a different number of pilot signals than the legacy 802.11 standards or TGn Sync (INTEL-1012). Those changes, coupled with using QPSK modulation, allowed July 2005 WWiSE to put all 54 bits of its SIGNAL-N header field into one symbol using rate 1/2 code, rather than two like Hansen and TGn Sync. *See supra* Section V.G.2; AXW-2015 at 321 (explaining that the WWiSE SIGNAL-N field "is always sent using QPSK, R=1/2, and is not scrambled"). As I explained above in Sections V.B to V.D, that change in modulation mode to pack more bits into a single OFDM symbol comes at the cost of robustness, or equivalently range at which the header field can be properly received.

117. This difference in the WWiSE and TGn Sync proposals was apparently discussed during the TGn meetings. The WWiSE camp appeared to criticize TGn Sync for having "such a long HT-SIG field" and use of BPSK modulation. AXW-2016 (March 2005 TGn Sync Submission) at 35. The TGn Sync group's response was that the QPSK and rate 1/2 coding used in July 2005

WWiSE had an insufficient error performance and was not robust enough for the header field. AXW-2016 at 35.

118. As explained above in Section V.B, in an AWGN channel, there is a theoretical 3dB difference in SNR between BPSK and QPSK, though it may often be larger in practice, such as in fading channels as discussed above in Section V.D. As I explained above in Section V.D, this 3dB (or more) translates to a difference in range capabilities between BPSK and QPSK. The below chart, annotated to identify the relevant modulation modes in red (QPSK) and green (BPSK), provides a level of quantification for the range difference between the QPSK used by July 2005 WWiSE and the BPSK used by Hansen.

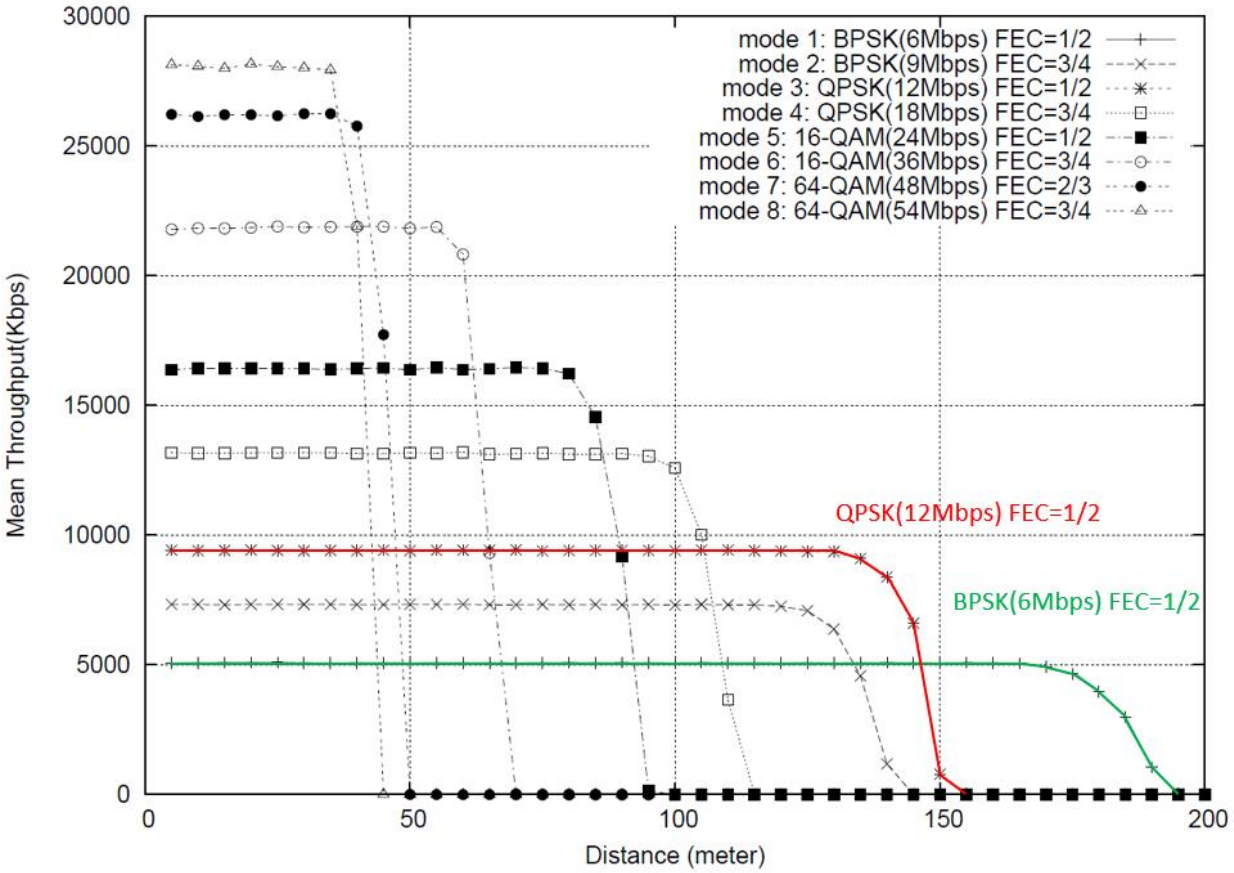


AXW-2029 (Manshaei) at 759. The chart shows mean throughput versus distance for various modulation and coding schemes in 802.11a. Consistent with expectation, it shows that BPSK provides reliable throughput at a longer range than QPSK.

119. This 3dB difference between BPSK and QPSK also explains why July 2005 WWiSE resorts to repeated header bits. Assuming perfect combining, a repeated symbol leads to a 3dB (i.e., doubling) SNR performance improvement. *See, e.g.*, INTEL-1014 at [0080]; 1135-INTEL-1003 ¶94; 1136-INTEL-1003 ¶94; 1137-INTEL-1003 ¶94; 1138-INTEL-1003 ¶94; 1139-1140-INTEL-1003 ¶94. In

essence, the repeated QPSK header symbol in July 2005 WWiSE simply tries to put the header back on par with BPSK modulation. Thus, July 2005 WWiSE repeats the SIGNAL-N field because it chose to start from a less robust modulation mode in QPSK. A POSA would have recognized that and understood that Hansen already uses more robust BPSK for its header field.

120. Beyond already having a more robust header than July 2005 WWiSE, Hansen's transceiver also builds in the beamforming feature. As explained above in Sections V.G.1 and VI.A, beamforming can boost the signal quality and therefore improve range. July 2005 WWiSE, however, did not include a specific way to do beamforming. While some articles regarding WWiSE proposals reference beamforming, they state only that provisions are included. *See, e.g.*, INTEL-1037. The proposals themselves, or at least July 2005 WWiSE, do not include a specific implementation. That Hansen already had beamforming for extending range is another reason why a POSA would have not adopted the approach of July 2005 WWiSE into Hansen.

121. Additionally, Hansen uses MIMO with Figure 6a, as depicted below, which shows transmission of the preamble and header from N antennas of Hansen's MIMO transceiver. *See* INTEL-1005 at [0087]. As Dr. LaPorta explains, "the header field is either transmitted from one antenna (INTEL-1012,

121:1-2, 24-27) or an identical header field (Signal*-N) is transmitted by each antenna, even for MIMO operations. (INTEL-1006, 70:18-20 ('The SIG-N MIMO-OFDM symbol is transmitted simultaneously from all TX antennas in all modes'); INTEL-1012, 121:24-122:2.)" 1135-INTEL-1003 ¶108; 1136-INTEL-1003 ¶114; 1137-INTEL-1003 ¶108; 1138-INTEL-1003 ¶115; 1139-1140-INTEL-1003 ¶112. As explained above in Section VI.A, these repeated header fields on the different transmit chains can be combined at the receiver to improve reception of the underlying information bits of the header.

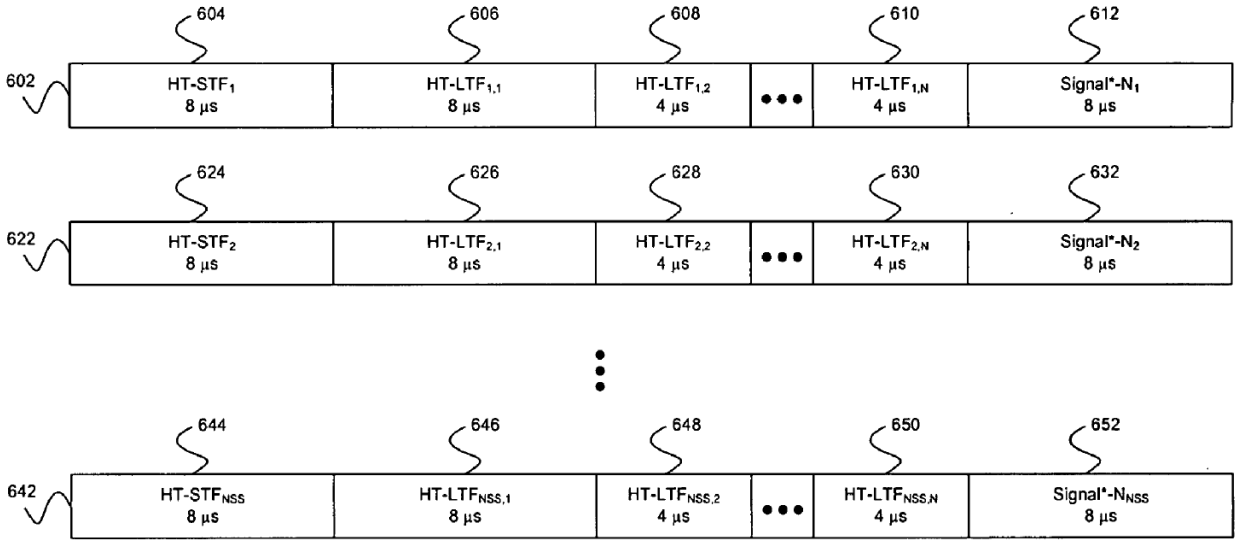


122. The lower bound in the MIMO scenario is the 3dB improvement from using two antennas. *See, e.g.*, INTEL-1024 at 72 ("doubling *L* yields a 3-dB power gain"), 77-78. More antennas would lead to further improvement and additional range performance. This is yet another reason why Hansen has already ample

range extension features, and a POSA would have not simply added repeated header bits.

123. Adding repeated header bits, especially when there is no showing that they are needed or beneficial, is also contrary to the teachings and goals of Hansen itself. As explained in Section VI.A above, the purpose of the greenfield mode is to eliminate unnecessary portions of the PPDU, so as to improve overall throughput. Moreover, according to Hansen, greenfield preambles "may further enable more robust transmission of data by enabling comparable data rates to be maintained while reducing the coding rate of encoded transmitted data. The reduction of the coding rate may enable comparable data rates to be maintained for transmission via RF channels characterized by lower SNR while still achieving desired target levels of packet error rates." INTEL-1005 at [0027]. In other words, greenfield mode would allow a reduction in code rate (meaning more robust and therefore longer range) while achieving similar or only slightly lower data rates. The addition of redundant header bits—which July 2005 WWiSE was using because its header was sent using QPSK—would be contrary to Hansen's teachings, because it would needlessly reduce the overall throughput.

### B. Repeated Header Bits Alone Is An Incomplete Version of July 2005 WWiSE's Extended Range Mode

124. As explained above in Section V.G.2, repeated header bits were one of at least four different requirements in July 2005 WWiSE to make Extended Range mode functional. And as it is clear from the context of those different requirements in July 2005 WWiSE, Extended Range mode was not about robustly sending header bits. Instead, it was to have devices that could communicate useful data (rather than only the header) at extended range. While there can be reasons in certain environments or certain systems to repeat a header frame alone, in most cases, something will be done to the data/payload to ensure it can be robustly communicated as well. *See, e.g.*, 1135-Petition at 71; 1136-Petition at 67; 1137-Petition at 72-73; 1138-Petition at 67-68; 1139-Petition at 72-73; 1140-Petition at 66-67 ("Choi teaches repetition of 'data' generally"); INTEL-1014 at [0083] ("However, the signal field period P200 and the data field period P300 are repeated."); INTEL-1018 at 47-51 (describing repetition in payload and header). That is the case with July 2005 WWiSE as well, which states that "[t]he extended communication range configuration is only used with the optional NTX-STBC modes (described in subclause 20.3.5.10) and only with rate-1/2 encoding using BPSK modulation." INTEL-1006 at 69.

125. To recap, the four requirements from July 2005 WWiSE are appropriate PHY modes, a special beacon, coexistence/protection mechanisms, and robust signaling. *See* INTEL-1030 at 22; *supra* Section V.G.2.

126. As explained above in Section V.G.2, repeated header bits were necessary because July 2005 WWiSE chose to use QPSK modulation for its header. Thus, the robust signaling required for July 2005 WWiSE was on the order of what Hansen already provided for its header.

127. The appropriate PHY modes are the ones that July 2005 WWiSE explicitly says the Extended Range configuration is only used with: NTX-STBC modes with rate-1/2 encoding using BPSK modulation. INTEL-1006 at 69. These modes are described in clause 20.3.5.10 of July 2005 WWiSE. As noted there, these modes are Space-Time Block Coding modes that "are applicable when $N_{TX}$, the number of TX antennas, is greater than $N_{ss}$, the number of transmitted spatial streams." INTEL-1006 at 78. While various NTX-STBC modes are defined in July 2005 WWiSE, it makes clear that only the rate-1/2 BPSK mode is used with Extended Range mode. *See* INTEL-1006 at 69, 79. As described in the document, the NTX-STBC modes require specific relationships between subcarriers of OFDM symbols across two symbol times and is also dependent on the number of antennas and number of spatial streams used. *See* INTEL-1006 at 79-82. Hansen

does not mention NTX-STBC modes, nor explain or state that its transceiver is capable of using them. And the Petition never describes incorporating NTX-STBC modes into Hansen, let alone explains how a POSA would have done so, or why a POSA would have done so in light of the range enhancing features already present in Hansen, as described in Section VI.A above. Moreover, adding NTX-STBC modes would also require changing Hansen's HT-SIG to account for additional modulation modes, as the 6 MCS bits were essentially all accounted for already in TGn Sync, and HT-SIG in Hansen has nowhere to put additional bits signaling NTX-STBC configuration. *See* INTEL-1012 at 134-35, 156.

128. The special beacon is transmitted using the NTX-STBC BPSK rate 1/2 mode, meaning that it can be received at a greater distance by an ER device. *See supra* Section V.G.2. This means that ER devices can associate with an access point and join the wireless network at a longer range than NR devices. As explained above in Section V.G.2, this also means that the ER mode creates a new hidden node problem. Because of that, July 2005 WWiSE builds in protection mechanisms to ensure that NR and ER devices do not cause collisions over the air because they cannot hear the transmissions of the other mode. *See supra* Section V.G.2. As noted during TGn, this involved "significant MAC modifications." INTEL-1030 at 23. These are akin to those in 802.11g, in which throughput was

decreased because of the extra protection mechanisms required. *See supra* Section V.G.2. But this is all necessary for July 2005 WWiSE's extended range mode. But again, Hansen's goal with its greenfield preambles was to eliminate unnecessary overhead and increase overall throughput.

129. The Petition and Dr. LaPorta consider none of these factors when they took the repeated header bits out of July 2005 WWiSE to purportedly combine them with Hansen. These are considerable changes to the protocol and transceiver of Hansen, and neither the Petition nor Dr. LaPorta attempt to incorporate them into the combination nor explain how or why a POSA would have done so, despite July 2005 WWiSE itself, and related documentation, noting that these other aspects of the July 2005 WWiSE proposal are requirements for its Extended Range mode. Moreover, the Petition fails to demonstrate that the resulting combination has any meaningful change to its range performance. While a POSA could repeat header bits in Hansen, there is no reason to do so, and certainly not for the reasons headers are repeated in July 2005 WWiSE, as I have explained. And by ignoring the NTX-STBC modes, the Petition never demonstrates that there is any change to the range performance for the data payload portion of the proposed PPDUs. The Petition nowhere explains why a POSA would have wanted only the header bits to be

received at a greater distance. Said another way, changes to the MAC packet format need to be considered in light of the PHY layer and cannot be done in a vacuum.

### C. The Petition's REXT Bit Implementation Is Flawed

130. The Petition acknowledges that "[n]either Hansen nor July 2005 WWiSE explicitly discloses the order of transmission or generation for the four OFDM symbols corresponding to the Long Signal*-N header bits." 1135-Petition at 49; 1136-Petition at 42; 1137-Petition at 49; 1138-Petition at 42; 1139-Petition at 52; 1140-Petition at 44. So the Petition tries to provide reasons why the claimed ordering would be used. *See* 1135-Petition at 49-53; 1136-Petition at 43-46; 1137-Petition at 49-53; 1138-Petition at 43-46; 1139-Petition at 52-56; 1140-Petition at 44-48. I disagree with those assertions.

131. July 2005 WWiSE deals with a single OFDM symbol that contains the entire SIGNAL-N header field and repeats that symbol in its entirety. As explained above in Section V.G.2, SIGNAL-N is the counterpart to the HT-SIG field in Hansen and TGn Sync. The HT-SIG field is made up of HT-SIG1 and HT-SIG2. But rather than repeating the entire HT-SIG field in order, the Petition splits the field and repeats the separate halves. The Petition looks to TGn Sync for the rationale, because TGn Sync says that "HTSIG1 shall be transmitted first in time." 1135-Petition at 51; 1136-Petition at 45; 1137-Petition at 51; 1138-Petition at 45;

1139-Petition at 55; 1140-Petition at 47. But transmitting in the order HT-SIG1, HT-SIG2, ER-HT-SIG1, ER-HT-SIG2 still maintains that HT-SIG1 is first.

132. The Petition uses the same TGn Sync rationale to suggest it would be obvious to try the claimed ordering. *See* 1135-Petition at 49-50; 1136-Petition at 42-43; 1137-Petition at 49-50; 1138-Petition at 42-43; 1139-Petition at 52-53; 1140-Petition at 44-45. But this ignores the fact that repeating is unnecessary in the first place and is contrary to Hansen's teachings. *See supra* Section VII.A. It also ignores that neither Hansen nor TGn Sync contemplated splitting up the HT-SIG field or having any repetition, so the Petition does not demonstrate why a POSA would even try the claimed ordering. And as I explain further below, applying the claimed ordering to the combination causes the combination not to work.

133. The Petition asserts that its combination has the ability to "start communication in NR mode and move to ER mode if channel conditions become bad and messages are dropping," but also that a transmitter wishes "to transmit at the highest speed achievable based on the current conditions of a channel." 1135-Petition at 21-22; 1136-Petition at 23; 1137-Petition at 22-23; 1138-Petition at 22-23; 1139-Petition at 23; 1140-Petition at 23. The combination includes a "REXT bit," taken from the SIG-N field of July 2005 WWiSE, which the Petition asserts

is used "to indicate [whether] the device is operating in standard (NR) or ER mode." 1135-Petition at 19; 1136-Petition at 20-21; 1137-Petition at 20; 1138-Petition at 20; 1139-Petition at 20-21; 1140-Petition at 20-21. In other words, in the combination, two communicating nodes are able to move back and forth between NR mode and ER mode based on current channel conditions. If a device starts "communication in NR mode," but recognizes that conditions have changed and NR communication is not successful, it is to switch to ER mode and set the REXT bit to so indicate. But because a transmitter wants to achieve the highest rate possible, it would also try to move from ER mode back to NR mode at some point in time. *See* 1135-Petition at 21-22; 1136-Petition at 23; 1137-Petition at 22-23; 1138-Petition at 22-23; 1139-Petition at 23; 1140-Petition at 23.

134. The Petition also asserts that in its combination, in the ER mode, "the first symbol (HT-SIG1) is received, demodulated, and stored in a buffer at the receiver. The second HT-SIG1 symbol (ER-HT-SIG1) is then received, demodulated and combined with HT-SIG1 from the buffer and the combined demodulated symbol is decoded. The same process is repeated for HT-SIG2/ER-HT-SIG2." 1135-Petition at 52; 1136-Petition at 45-46; 1137-Petition at 52; 1138-Petition at 45-46; 1139-Petition at 55-56; 1140-Petition at 47-48. According to the Petition, this approach serves as motivation to arrive at the claimed ordering

because it eliminates additional buffering. 1135-Petition at 52; 1136-Petition at 45-46; 1137-Petition at 52; 1138-Petition at 45-46; 1139-Petition at 55-56; 1140-Petition at 47-48.

135. These conditions above as laid out in the Petition do not work together. In a wireless environment with different PPDUs, like in the Petition's combination, mechanisms must exist so that the receiver knows which PPDU is being received. For example, in the TGn Sync proposal (INTEL-1012), it notes that, "[s]ince our proposal supports interoperability between HT devices and legacy OFDM devices at the PHY layer, a HT receiver will not a-priori know whether a legacy packet is being received or a HT packet. That determination can only be made after the L-SIG. Our proposal supports two mechanisms for signaling a HT transmission: (a) send the HT-SIG as a BPSK signal on the quadrature axis, instead of on the in-phase axis, and (b) invert the polarity of the pilots in the HT-SIG with respect to the pilots in the L-SIG. These two mechanisms allow an auto-detect of a HT transmission." INTEL-1012 at 121. Thus, before even considering what the bits being received are and what to do with them, the receiver would see these changes to the RF signal between the L-SIG symbol and the subsequent HT-SIG symbol, and know that the PPDU is not a legacy PPDU.

136. In the context of the Petition's two PPDUs, the receiver must have a way to know which PPDU it is currently receiving so that it knows which symbols are repetitions of which, so it knows which are to be combined together. As noted above, the only thing that could be used in the combination is the REXT bit. While the Petition states that "a POSITA would have understood that the order of Long Signal*-N header parts (and resulting symbols) in a PPDU would be specified in documentation (such as an industry standard) so that a receiver is able to interpret received data," this is insufficient. 1135-Petition at 50; 1136-Petition at 44; 1137-Petition at 50; 1138-Petition at 44; 1139-Petition at 54; 1140-Petition at 46. Putting aside that such a documentation would not yet exist for a POSA and would require a new standard, it would not help the receiver know at a given time which PPDU is being received. The problem with the combination is the REXT bit is in the HT-SIG2 symbol. *See, e.g.*, 1135-Petition at 19-20, 1136-Petition at 21; 1137-Petition at 20-21; 1138-Petition at 20-21; 1139-Petition at 21; 1140-Petition at 21 ("A POSITA would have understood that the reserved field of the HT-SIG2 part of Signal*-N and Long Signal*-N would be used to carry this REXT information.").

137. The consequence of this is, when an arbitrary PPDU of the combination arrives, "the first symbol (HT-SIG1) is received, demodulated, and stored in a buffer at the receiver." 1135-Petition at 52; 1136-Petition at 45-46;

1137-Petition at 52; 1138-Petition at 45-46; 1139-Petition at 55-56; 1140-Petition at 47-48. At this point, the receiver has not even decoded HT-SIG1 according to the Petition. The receiver also has no way of knowing whether the next symbol is ER-HT-SIG1 or HT-SIG2. The Petition says that in ER mode, "[t]he second HT-SIG1 symbol (ER-HT-SIG1) is then received, demodulated and combined with HT-SIG1 from the buffer and the combined demodulated symbol is decoded." 1135-Petition at 52; 1136-Petition at 45-46; 1137-Petition at 52; 1138-Petition at 45-46; 1139-Petition at 55-56; 1140-Petition at 47-48. But again, at this point, the receiver still has not even seen the REXT bit. The Petition never explains how the receiver knows to combine the two symbols when the receiver conceivably could switch between NR and ER mode as the Petition states. The Petition never says what would happen in the NR mode. If the receiver operated as above in the NR mode, then it would attempt to combine HT-SIG1 with HT-SIG2 and end up with a corrupted header. And the only thing in the combination that could tell the receiver that it should expected repeated header bits and combine them is in HT-SIG2, which would be the third OFDM symbol received in ER mode.

138. Thus, as proposed, the approach of putting the REXT bit in HT-SIG2 leads to a system that is unable to switch between NR and ER mode as needed like the Petition suggests is possible and relies on for motivation to combine. A POSA

would have recognized these flaws and appreciated that the Petition's proposed combination would not work.

### D. In Light of the Above Issues, a POSA Would Not Be Motivated to Combine Hansen and July 2005 WWiSE

139. First, the Petition asserts that Hansen suggests combination with July 2005 WWiSE because "Hansen defined a compromise proposal based on aspects of both January 2005 WWiSE and the TGN Sync proposal." 1335-Petition at 20; 1336-Petition at 21; 1337-Petition at 21; 1338-Petition at 21; 1339-Petition at 21; 1340-Petition at 21. That is not an accurate statement. As I explained above in Section VI.A, aside from the idea of a greenfield mode, Hansen's Figure 6a, which the Petition relies on, essentially uses nothing from the WWiSE proposals and the PPDU formats shown in Hansen Figures 5a, 5b, and 5c. The Petition identifies nothing from WWiSE proposals that Hansen incorporates, and so it is incorrect to say that Hansen "suggest[s] to bridge the gap between the WWiSE and TGn Sync industry groups." 1335-Petition at 20; 1336-Petition at 21; 1337-Petition at 21; 1338-Petition at 21; 1339-Petition at 21; 1340-Petition at 21. There were numerous differences between the two industry groups in terms of their proposals, and adding just greenfield PPDUs could hardly be considered a compromise. *See, e.g.*, AXW-2015 at 314-42. The Petition also states that a POSA in 2009 would have looked back "to incorporate the newly introduced aspects of the July 2005 WWiSE

proposal, including support for the ER capability, into the Hansen's greenfield PPDU." 1335-Petition at 20; 1336-Petition at 21; 1337-Petition at 21; 1338-Petition at 21; 1339-Petition at 21; 1340-Petition at 21. But by September 2005, WWiSE proposals essentially disappeared because the various groups actually did begin merging and compromising.[9] And as explained above in Section V.G.3, the 802.11n standard never incorporated the ER capability as defined in July 2005 WWiSE. The Petition ignores this and provides no reason why a POSA would have looked at July 2005 WWiSE at all when the standard had progressed much further by 2009 in a direction without repeated header bits. The Petition cites some articles citing that the industry wanted the proposals to merge, but none of these articles mentions the ER mode from July 2005 WWiSE at all, let alone something that should be part of any compromise. Of course, the industry wanted a standard to be developed. But compromise to get to a final standard is unrelated to repeated

---

[9] *See, e.g.*, AXW-2030 (IEEE 802.11n Report). After nearly being eliminated entirely, WWiSE and MITMO were reinstated in May 2005, but by September 2005 a "Joint Proposal group (now comprised of members from three proposal groups reinstated during the May meeting (TGn Sync, WWiSE and MITMOT)" was "developing a merged proposal." AXW-2030 at 7-8.

header bits or the ER mode from July 2005 WWiSE. And the addition of the greenfield mode aspect to Hansen would not, on its own, have provided any motivation for a POSA to start looking to make significant changes in unrelated ways, like range, to the overall protocol.

140. Second, the Petition asserts that a POSA would have "incorporated July 2005 WWiSE's ER capability into Hansen's greenfield PPDU to extend the range of successful communication between devices." Petition at 20. But as explained above in Sections VII.A and VII.B, the combination does not extend the range of successful communication between devices. The approach of using the REXT bit to signal the ER mode would fail for the reasons I explained in Section VII.C. And by ignoring all the requirements of July 2005 WWiSE's ER mode and not attempting to incorporate them into Hansen, the combination, at best, extends the range of the header field, but not successful communication between devices of useful data/payload. *See supra* Section VII.B. That is why the Petition is wrong to argue that "July 2005 WWiSE expressly suggests the benefit of including an ER capability, stating: 'A characteristic of ER MCS is that they have a longer range than NR MCS.'" Petition at 20-21. The Petition did not even incorporate the ER MCS into the combination, as doing so would require rearchitecting Hansen's transceiver and header to include NTX-STBC modes. *See supra* Section VII.B.

The Petition provides no rationale for why a POSA would be motivated to extend the range of only the header field.

141. And for the reasons discussed, the Petition's generic assertion that "[a]n ER capability is particularly beneficial in WLAN systems in which a potential exists for the receiver to move a significant distance from the transmitter" does not change that. Even if I assumed that the Petition offered a combination that actually extended the range for more than just the header, a POSA would have understood that wireless is a series of tradeoffs, and there are numerous approaches to improving range such as repetition, beamforming, antenna diversity, MIMO, changing code rates, changing modulation modes, changing carrier frequency, changing transmit power, changing RF hardware, etc. A POSA would have not added repeated headers to Hansen without considering other approaches, some of which Hansen already has, as already explained. Indeed, since basic repetition was known, a POSA would have expected that if the repeated header function was desirable enough, Hansen would have at minimum discussed it. That Hansen never suggests or proposes the use of repeated headers would indicate to a POSA that the repeated headers should not be used in the compromise greenfield preambles. For that reason, it is important to note that the ER mode of July 2005 WWiSE provides longer range relative to the NR mode of July 2005 WWiSE only. Absent analysis,

which is not provided in the Petition or in the Petition's expert declaration, a POSA would have not assumed that range extension as defined in July 2005 WWiSE would be beneficial if added to Hansen. For the reasons I have explained, it would not be. *See supra* Section VII.A.

142. Furthermore, as explained in Section VII.A, Hansen already has improved range compared to July 2005 WWiSE. The proposals were discussed numerous times during TGn working group meetings, including comparing beamforming, like in Hansen, with NTX-STBC in July 2005 WWiSE. *See, e.g.*, AXW-2016 at 41-42. Responding to the WWiSE group, the TGn Sync group explained that the "[a]dditional complexity of 2-symbol processing, overhead ofextra [sic] dead symbol etc." were all reasons why such modes were not included in TGn Sync proposals, which favored beamforming, which "outperforms" NTX-STBC and is "superior" to it. AXW-2016 at 41-42.

143. Third, the Petition asserts that a POSA "would have been motivated to include the capability for an ER capable device to turn on or off ER operation using a header bit (REXT)." 1135-Petition at 21; 1136-Petition at 23; 1137-Petition at 22; 1138-Petition at 22; 1139-Petition at 23; 1140-Petition at 23. I have already addressed why the Petition's assertions on pages 21 and 22 are incorrect in light of the flawed REXT bit implementation. *See supra* Section VII.C.

Additionally, because the combination does not do anything to extend the range of the data/payload, it does not make sense to tie repeated header bits to a motivation to transmit at the highest speed achievable. *See* 1135-Petition at 21-22; 1136-Petition at 23; 1137-Petition at 22-23; 1138-Petition at 22-23; 1139-Petition at 23; 1140-Petition at 23.

144. I also note that the Petition asserts that a POSA would have combined Hansen and July 2005 WWiSE "to reach a final version of the 802.11n standard." 1135-Petition at 20-23; 1136-Petition at 21-25; 1137-Petition at 21-24; 1138-Petition at 21-24; 1139-Petition at 21-25; 1140-Petition at 21-25. Yet the addition of the REXT bit to Hansen Figure 6a and the combination's PPDUs eliminates the only reserved bit in the header field. A POSA motivated to define PPDUs for a standard would have understood that standards are typically defined in a way to allow some flexibility for future extensibility and/or customization. For example, the 802.11a SIGNAL header field contained a reserved bit, INTEL-1015 at 7; the January 2005 TGn Sync proposal HT-SIG header field contained a reserved bit, INTEL-1012 at 133-34; the July 2005 WWiSE proposal SIGNAL-N header field contained 13 reserved bits, INTEL-1006 at 69-70; the G.9960 PHY-frame header field contained 6 reserved bits, INTEL-1018 at 32-33; and the eventual 802.11n standard HT-SIG header contained a reserved bit, INTEL-1017 at 275-76. In my

view, there is a benefit in maintaining one or more reserved bits for flexibility or future extension, such as in the standards cited above. While A POSA could have used the REXT bit of July 2005 with Hansen to arrive at the 802.11n standard, it is more likely that a POSA would not want to use this reserve bit, if such a use could be avoided, because it would sacrifice flexibility, especially as the proposed use of the bit is flawed.

145. Fourth, the Petition asserts that a POSA would have been motivated to combine Hansen and July 2005 WWiSE because "the combination is merely the application of a known technique (July 2005 WWiSE's ER capability) to a known device (device with Hansen's 'compromise' greenfield PPDU) ready for improvement and use of a known technique (July 2005 WWiSE's ER capability) to improve similar devices (device with Hansen's 'compromise' greenfield PPDUs) in the same way (providing ER capability)." 1135-Petition at 22; 1136-Petition at 23; 1137-Petition at 23; 1138-Petition at 23; 1139-Petition at 23; 1140-Petition at 23. For the reasons discussed in Sections VII.A, VII.B, and VII.C, I disagree. The statement conflates "July 2005 WWiSE's ER capability" with just repeated header bits. As I have explained, the ER capability of July 2005 WWiSE had four requirements, all of which were necessary to ensure devices operated without significant issues. *See supra* Sections VI.B and VII.B. Further, because

Hansen already has range extending features and uses BPSK modulation for its header field, July 2005 WWiSE's extended range approach and use of repeated header bits is not applicable to Hansen in the same way as it is used in July 2005 WWiSE and Hansen has no need for improvement in this way and therefore is not ready for improvement using this technique as asserted by the Petition. *See supra* Section VII.A.

146. And stating that the combination's PPDU "has a similar structure to the greenfield PPDU disclosed in WWiSE" is essentially treating all header bit maps as "similar." 1135-Petition at 23; 1136-Petition at 24; 1137-Petition at 23-24; 1138-Petition at 24; 1139-Petition at 24; 1140-Petition at 24. The two are very different. They do not even have the same number of bits nor the same number of OFDM symbols. Hansen's header field has 48 information bits split over two OFDM symbols with 24 information bits each. July 2005 WWiSE has 54 information bits in a single OFDM symbol. And they were transmitted using different modulation as I have explained. The two figures below show the Hansen's PPDU header field (from page 15 of the 1135-Petition) and the July 2005 WWiSE SIGNAL-N field (from Figure 001 on page 70 of July 2005 WWiSE).

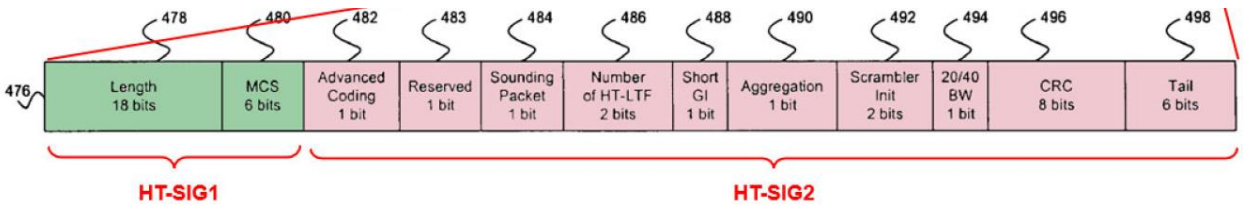

1135-Petition's Header Field (excerpted from page 15)

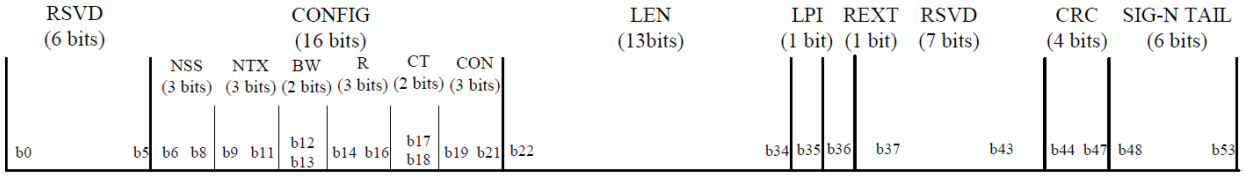


July 2005 WWiSE SIGNAL-N Field (excerpted from page 70)

147. It would have been readily apparent to a POSA that the two header fields include different bit maps that represent different information. Hansen includes a sounding packet bit, and 2 additional bits to indicate the number of training symbols used with the sounding packet (Number of HT-LTF), used *inter alia* with beamforming. *See* INTEL-1012 at 136.[10] July 2005 WWiSE does not have sounding packets or beamforming. Hansen uses 6 bits for modulation, coding rate, and number of spatial streams (MCS), while July 2005 WWiSE uses 12 bits

[10] I refer to January 2005 TGn Sync (INTEL-1012) in this discussion because the Petition asserts this forms the basis for Hansen. *See* 1135-Petition at 11 n.2; 1136-Petition at 12 n.2; 1137-Petition at 12 n.2; 1138-Petition at 12 n.2; 1139-Petition at 12 n.2; 1140-Petition at 12 n.2. Even without definition of the bit maps in Hansen, a POSA would still recognize from the names and bit assignments in Hansen Figure 4c that there are numerous differences between Hansen's header field and July 2005 WWiSE's header field.

to provide similar information (NSS, NTX, R, CON portions of CONFIG). *See* INTEL-1012 at 134-35; INTEL-1006 at 70. Hansen has 1 bit to toggle the length of the guard interval for symbols (Short GI), while July 2005 WWiSE has no such bits. INTEL-1012 at 136. While both Hansen and July 2005 WWiSE have 1 bit related to aggregated PPDUs, they have different meanings. In Hansen, the Aggregation bit indicates if aggregation in the PPDU is used, which is used by the MAC to interpret the PSDU as either unaggregated or aggregated. INTEL-1012 at 136. In July 2005 WWiSE, the LPI bit indicates that the PPDU contains the last PSDU to be aggregated. INTEL-1006 at 70. Hansen includes 2 bits as an initialization value for a scrambler (Scrambler Init), while July 2005 WWiSE has no such bits. INTEL-1012 at 136. Hansen includes 1 bit for 20/40MHz selection (20/40 BW), while July 2005 WWiSE uses 2 bits for the same function (BW portion of CONFIG). INTEL-1012 at 136; INTEL-1006 at 70. Hansen has 1 bit reserved for future extensibility (Reserved), while July 2005 WWiSE has 13 such bits (RSVD listed twice). INTEL-1012 at 134; INTEL-1006 at 70. Finally, July 2005 WWiSE includes the REXT bit to indicate whether standard or extended range configuration is used, while Hansen has no such bit. INTEL-1006 at 70. The differences in the headers reflect some of the differences in the protocols.

These differences point away from combination rather than suggest combination would be useful.

148. Fifth, the Petition asserts that "the combination [further] merely combines prior art elements according to known methods," arguing that a POSA would have known how to add a repeated field and redefine a header bit. 1135-Petition at 23; 1136-Petition at 24; 1137-Petition at 24; 1138-Petition at 24; 1139-Petition at 24; 1140-Petition at 24. But for the reasons that I have discussed above in this section, as well as for the reasons discussed in Sections VII.A, VII.B, and VII.C, this statement is also incorrect. As just some examples from my analysis above, the Petition fails to account for the fact that its REXT bit implementation is flawed, and that adding a repeated header field to Hansen would not be done for the reasons set forth in the Petition. Even if one assumes that a POSA could have combined Hansen and July 2005 WWiSE as proposed in the Petition, the resulting system would have had significant technical flaws that would have made it unfit for its intended purpose, and would have added unnecessary overhead that would decrease overall throughput, contrary to the teachings of Hansen. For these, and the other reasons I have explained above, a POSA would have not been motivated to combine Hansen and July 2005 WWiSE as proposed in the Petition to arrive at the challenged claims.

## VIII. A POSA Would Not Combine Hansen, July 2005 WWiSE, and Choi as Proposed in the Petition

149. The Petitions assert that "the order of symbol generation for the second packet type" and "the order of symbol demodulation" are "explicitly disclosed by Choi." 1135-Petition at 70; 1136-Petition at 64-65; 1137-Petition at 71; 1138-Petition at 66; 1139-Petition at 70; 1140-Petition at 65. The Petition also provides discussion of purported motivations "to combine Choi's repetition coding teachings with the combined system of Hansen and July 2005 WWiSE." 1135-Petition at 70-74; 1136-Petition at 65-70; 1137-Petition at 71-75; 1138-Petition at 66-71; 1139-Petition at 71-76; 1140-Petition at 65-70. But none of the explanations in the Petition change that a POSA would have not combined Hansen and July 2005 WWiSE in the first place, for all the reasons that I discussed in Section VII above. For example, the REXT bit would still be in HT-SIG2 and a receiver would not know what kind of PPDU is being received regardless of the addition of Choi. Moreover, the reasons provided do not motivate adding Choi to the combination of Hansen and July 2005 WWiSE either.

150. As explained above in Section VI.C, Choi discloses an older generation of technology compared to Hansen or July 2005 WWiSE. In particular, Choi makes no mention of MIMO, beamforming, or other antenna diversity techniques. As explained in Sections V.E and VI.C, these techniques would have

been well known to a POSA by 2009, but Choi does not take advantage of any of them. It is for that reason that Choi resorts to using repeated bits to extend range rather than other available techniques. Taking into account what is already included in Hansen, a POSA would have recognized these differences and realized that the repetition approach disclosed in Choi would be far less efficient than other available techniques. *See, e.g.*, INTEL-1024 at 59 (noting that repetition coding "is usually quite wasteful of the degrees of freedom of the channel"), 71-72 (describing antenna diversity and receive diversity), 77-80 (describing MIMO and use of more degrees of freedom). The Petition provides no explanation for why a POSA would reach back to this older and less efficient technology of Choi and add it to the MIMO system of Hansen. Thus, I disagree with the reasons the Petition asserts show that "Choi also expressly motivates the combination." 1135-Petition at 73; 1136-Petition at 69; 1137-Petition at 74; 1138-Petition at 70; 1139-Petition at 75; 1140 Petition at 69. The reasons provided ignore the differences between Choi and the art explained above.

## IX. Conclusion

151. All statements made herein of my own knowledge are true, and all statements made on information and belief are believed to be true. Further, I am aware that these statements are made with the knowledge that willful false statements and the like so made are punishable by fine or imprisonment, or both, under 18 U.S.C. § 1001. I declare under penalty of perjury that the foregoing is true and correct.

Executed on Nov. 15, 2023 (date), in Richardson, TX (city, state).

Zygmunt J. Haas Ph.D