US007289386B2

(12) **United States Patent**
Bhakta et al.

(10) **Patent No.: US 7,289,386 B2**
(45) **Date of Patent: Oct. 30, 2007**

(54) **MEMORY MODULE DECODER**

(75) Inventors: **Jayesh R. Bhakta**, Cerritos, CA (US); **Jeffrey C. Solomon**, Irvine, CA (US)

(73) Assignee: **Netlist, Inc.**, Irvine, CA (US)

(*) Notice: Subject to any disclaimer, the term of this patent is extended or adjusted under 35 U.S.C. 154(b) by 21 days.

(21) Appl. No.: **11/173,175**

(22) Filed: **Jul. 1, 2005**

(65) **Prior Publication Data**

US 2006/0062047 A1 Mar. 23, 2006

Related U.S. Application Data

(63) Continuation-in-part of application No. 11/075,395, filed on Mar. 7, 2005.

(60) Provisional application No. 60/588,244, filed on Jul. 15, 2004, provisional application No. 60/575,595, filed on May 28, 2004, provisional application No. 60/550,668, filed on Mar. 5, 2004.

(51) **Int. Cl.**
G11C 8/00 (2006.01)

(52) **U.S. Cl.** **365/230.06**; 365/51; 365/230.08

(58) **Field of Classification Search** 326/105; 365/230.06, 51, 52, 230.01, 230.03, 230.08; 711/5, 211
See application file for complete search history.

(56) **References Cited**

U.S. PATENT DOCUMENTS

4,392,212 A * 7/1983 Miyasaka et al. 365/230.06
5,247,643 A 9/1993 Shottan
5,426,753 A * 6/1995 Moon 711/5
5,703,826 A 12/1997 Hush et al.
5,805,520 A 9/1998 Anglada et al.
5,959,930 A * 9/1999 Sakurai 365/230.03
6,154,418 A 11/2000 Li
6,453,381 B1 9/2002 Yuan et al.
6,518,794 B2 2/2003 Coteus et al.
6,681,301 B1 1/2004 Mehta et al.
6,785,189 B2 8/2004 Jacobs et al.
6,807,125 B2 10/2004 Coteus et al.
6,813,196 B2 11/2004 Park et al.

(Continued)

OTHER PUBLICATIONS

Barr, Michael. "Programmable Logic: What's it to Ya?," Embedded Systems Programming, Jun. 1999, pp. 75-84. Retrieved by Examiner from http://www.netrino.com/Articles/ProgrammableLogic/index.php.*

(Continued)

Primary Examiner—Son Dinh
Assistant Examiner—Alexander Sofocleous
(74) *Attorney, Agent, or Firm*—Knobbe Martens Olson & Bear LLP

(57) **ABSTRACT**

A memory module connectable to a computer system includes a printed circuit board, a plurality of memory devices coupled to the printed circuit board, and a logic element coupled to the printed circuit board. The plurality of memory devices has a first number of memory devices. The logic element receives a set of input control signals from the computer system. The set of input control signals corresponds to a second number of memory devices smaller than the first number of memory devices. The logic element generates a set of output control signals in response to the set of input control signals. The set of output control signals corresponds to the first number of memory devices.

13 Claims, 18 Drawing Sheets

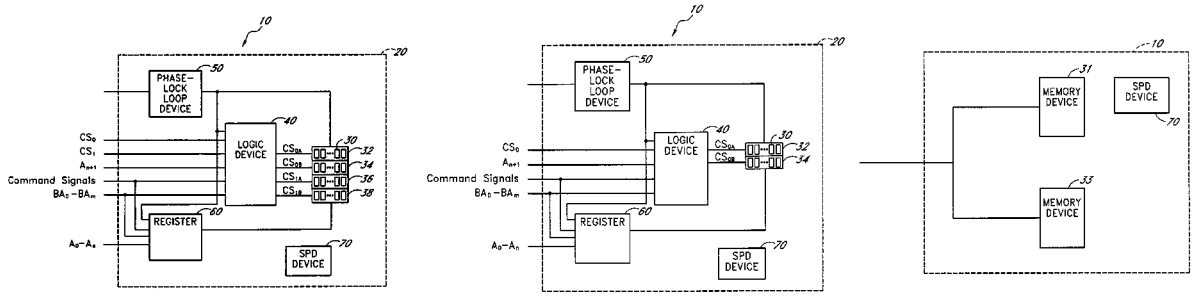

U.S. PATENT DOCUMENTS

6,944,694	B2	9/2005	Pax	
6,981,089	B2 *	12/2005	Dodd et al.	710/308
6,982,893	B2 *	1/2006	Jakobs	365/63
6,996,686	B2	2/2006	Doblar et al.	
7,046,538	B2 *	5/2006	Kinsley et al.	365/52
7,120,727	B2 *	10/2006	Lee et al.	711/5
7,200,021	B2 *	4/2007	Raghuram	365/51
2001/0052057	A1	12/2001	Lai et al.	
2002/0088633	A1	7/2002	Kong et al.	
2003/0063514	A1	4/2003	Faue	
2003/0191995	A1	10/2003	Abrosimov et al.	
2003/0210575	A1	11/2003	Seo et al.	
2004/0037158	A1	2/2004	Coteus et al.	
2005/0036378	A1	2/2005	Kawaguchi et al.	
2005/0281096	A1	12/2005	Bhakta et al.	
2006/0126369	A1 *	6/2006	Raghuram	365/51
2006/0129755	A1 *	6/2006	Raghuram	711/105

OTHER PUBLICATIONS

Cuppu, Vinodh, et al., "A Performance Comparison of Contemporary DRAM Architectures," *IEEE Proceedings of the 26th International Symposium on Computer Architecture*, May 2-4, 1999, Atlanta, Georgia, pp. 1-12.

JEDEC Standard No. 21-C, 4.20-2—168 Pin, PC133 SDRAM Registered Design Specification, Revision 1.4, Release 11a, Feb. 2002.

JEDEC Standard No. 21-C, 4.20-3—144 Pin, PC133 SDRAM Unbuffered SO-DIMM, Reference Design Specification, Revision 1.02, Release 11.

JEDEC Standard No. 21-C, DDR SDRAM PC2100 and PC1600 DDR SDRAM Registered DIMM Design Specification, Revision 1.3, Release 11b, Jan. 2002.

JEDEC Standard No. 21-C, 4.20.5—184 Pin, PC1600/2100 DDR SDRAM Unbuffered DIMM Design Specification, Revision 1.1, Release 11b.

JEDEC Standard No. 21-C, 4.20.6—200 Pin, PC2700/PC2100/PC1600 DDR SDRAM Unbuffered SO-DIMM Reference Design Specification, Revision 1.1, Release 11b, Apr. 26, 2002.

JEDEC standard JESD79D, "Double Data Rate (DDR) SDRAM Specification," published Feb. 2004.

Intel Corporation, PC SDRAM Registered DIMM Design Support Document, Revision 1.2, Oct. 1998.

Intel Corporation, 66/100 MHz PC SDRAM 64-Bit Non-ECC/Parity 144 Pin Unbuffered SO-DIMM Specification, Revision 1.0, Feb. 1999.

U.S. Appl. No. 11/173,175, filed Jul. 1, 2005, Bhakta et al.

* cited by examiner

FIG. 1A

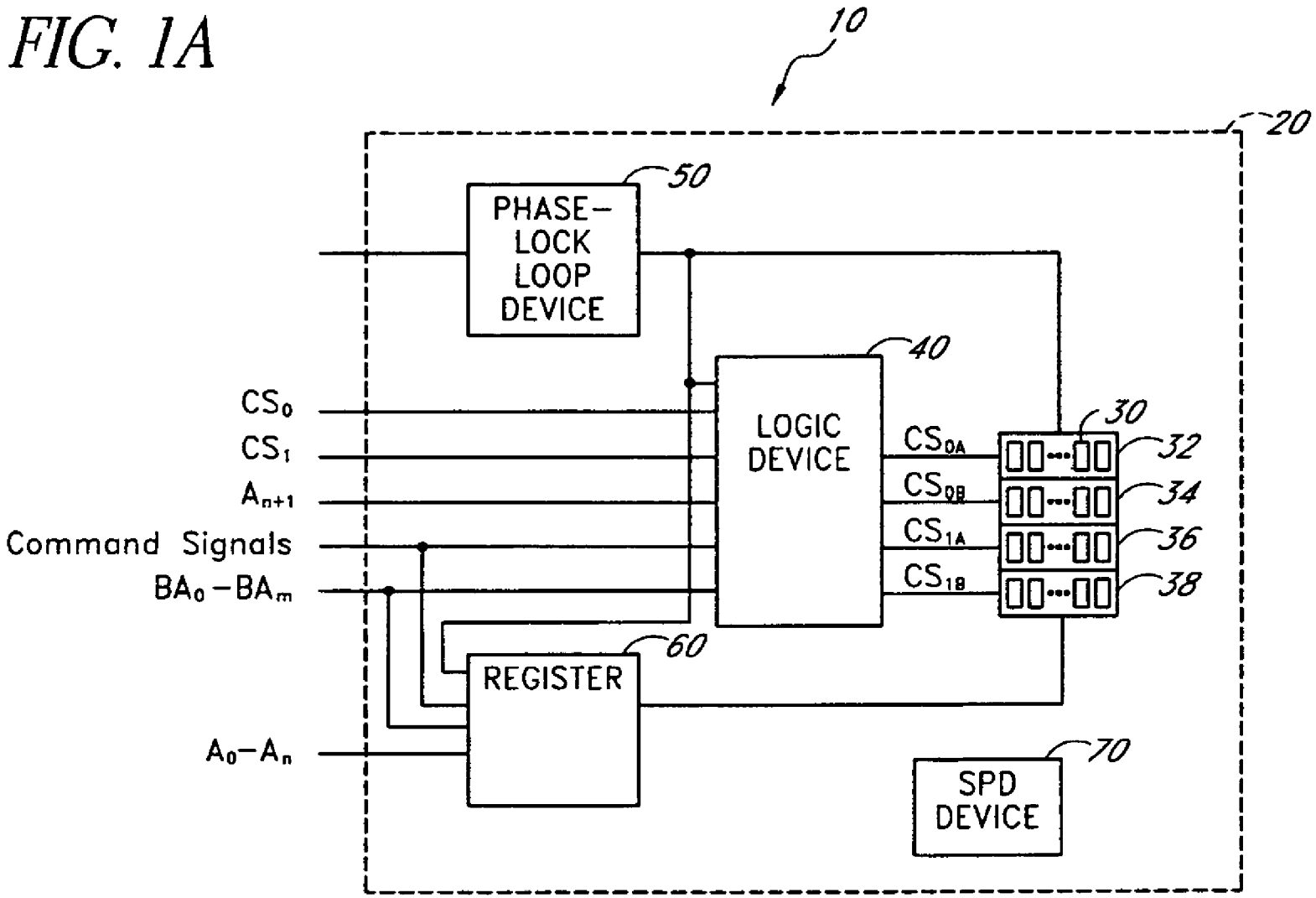
10
20
PHASE-LOCK LOOP DEVICE
50
LOGIC DEVICE
40
30
32
34
36
38
CS0
CS1
An+1
Command Signals
BA0 – BAm
CS0A
CS0B
CS1A
CS1B
REGISTER
60
A0–An
SPD DEVICE
70

FIG. 1B

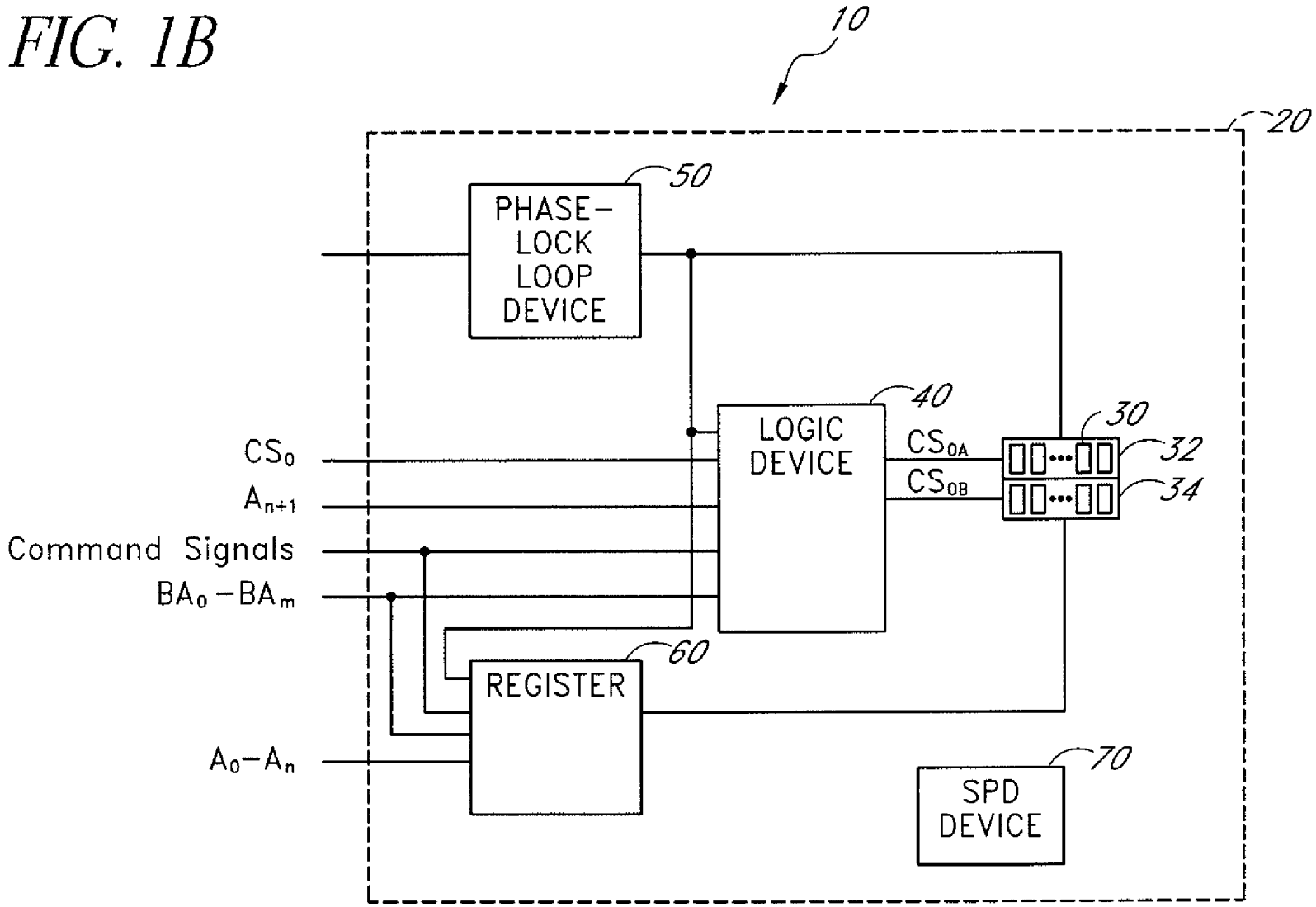
10
20
PHASE-LOCK LOOP DEVICE
50
LOGIC DEVICE
40
30
32
34
CS0A
CS0B
CS0
An+1
Command Signals
BA0 – BAm
REGISTER
60
A0–An
SPD DEVICE
70

FIG. 1C

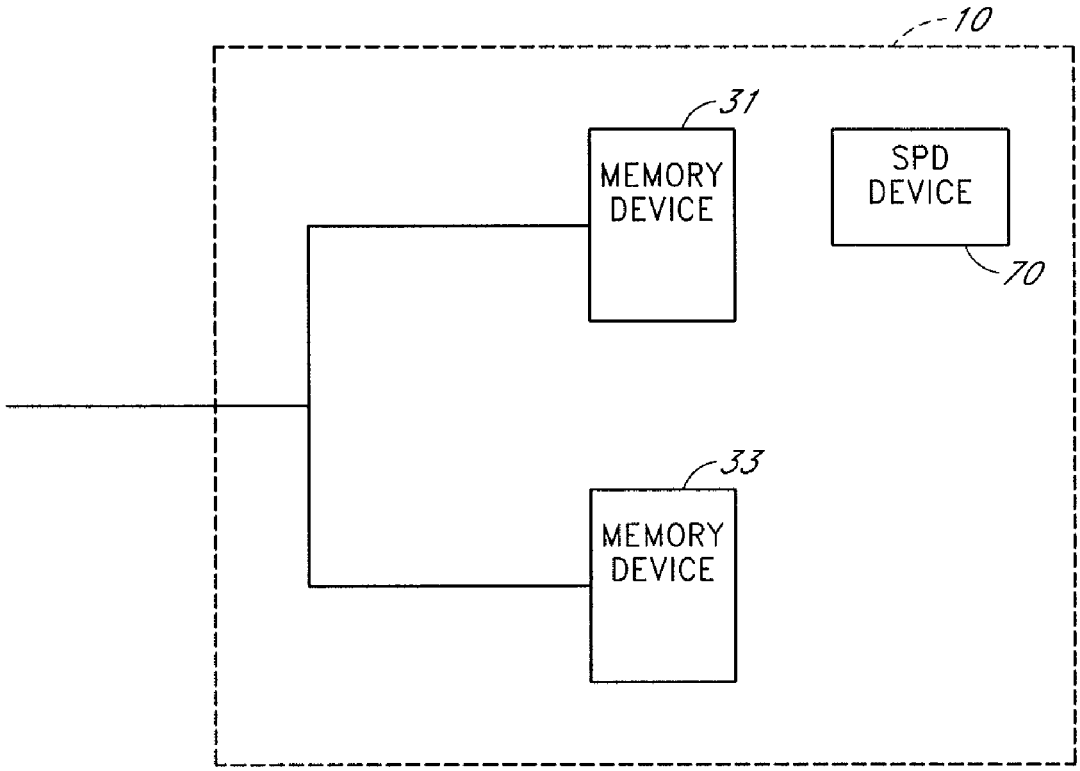

FIG. 2A

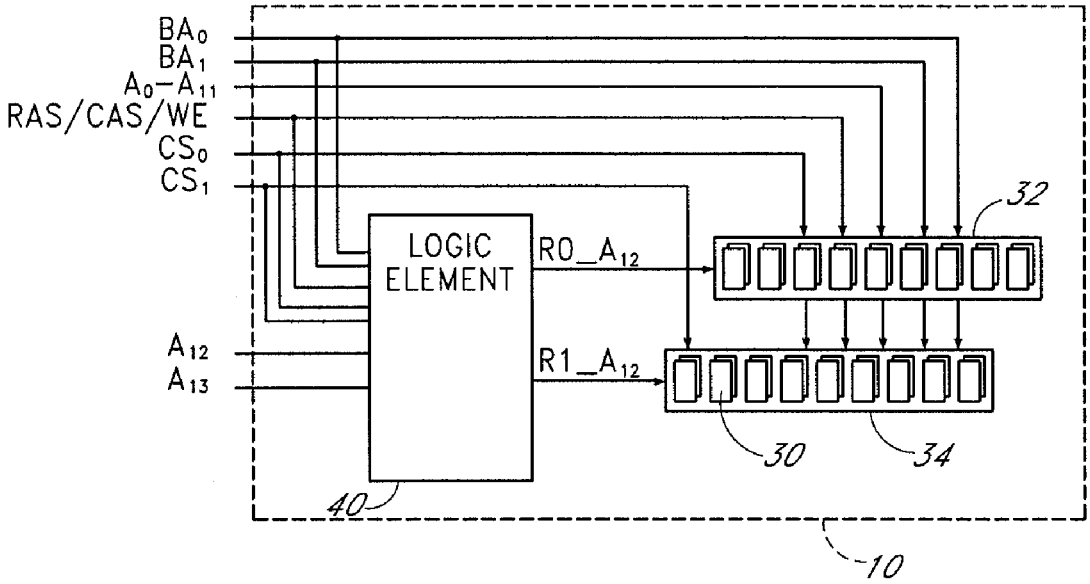
BA0
BA1
A0–A11
RAS/CAS/WE
CS0
CS1
A12
A13
LOGIC ELEMENT
R0_A12
R1_A12
32
30
34
40
10

FIG. 2B

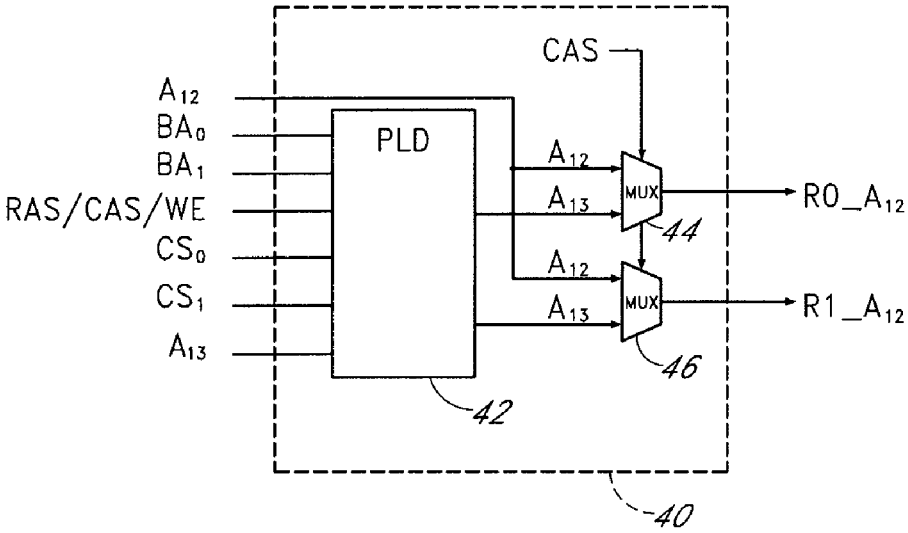
CAS
A12
BA0
BA1
RAS/CAS/WE
CS0
CS1
A13
PLD
A12
A13
MUX
44
A12
A13
MUX
46
R0_A12
R1_A12
42
40

FIG. 3A

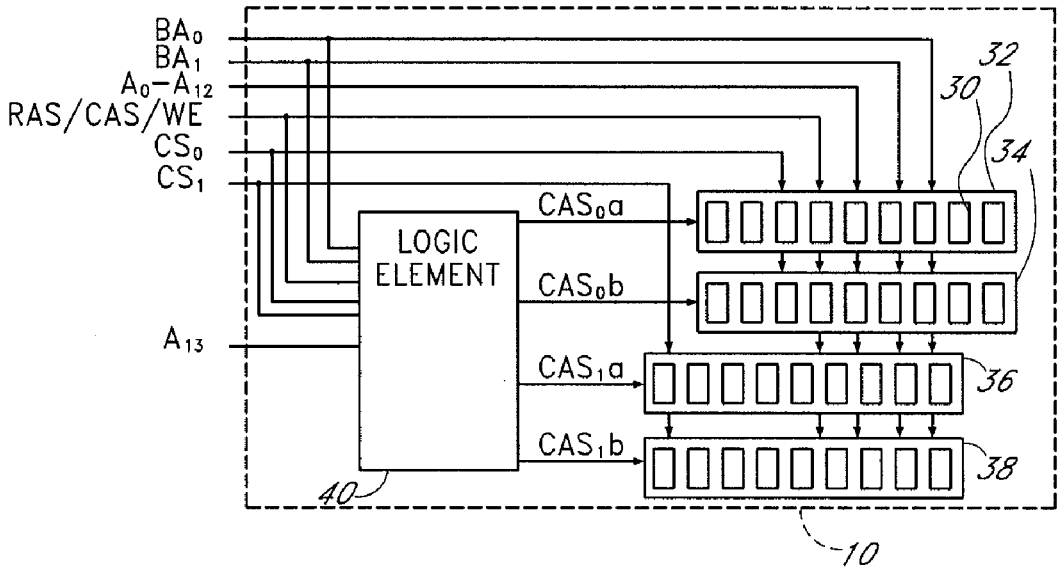
BA0
BA1
A0–A12
RAS/CAS/WE
CS0
CS1
A13
LOGIC ELEMENT
CAS0a
CAS0b
CAS1a
CAS1b
32
30
34
36
38
40
10

FIG. 3B

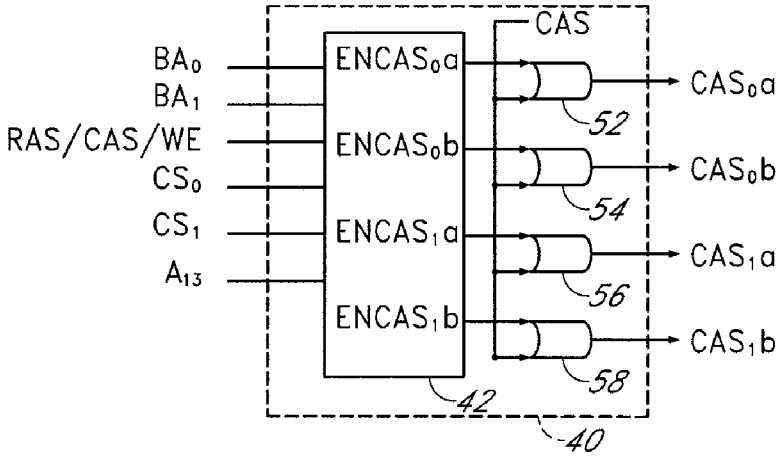
BA0
BA1
RAS/CAS/WE
CS0
CS1
A13
ENCAS0a
ENCAS0b
ENCAS1a
ENCAS1b
CAS
CAS0a
CAS0b
CAS1a
CAS1b
52
54
56
58
42
40

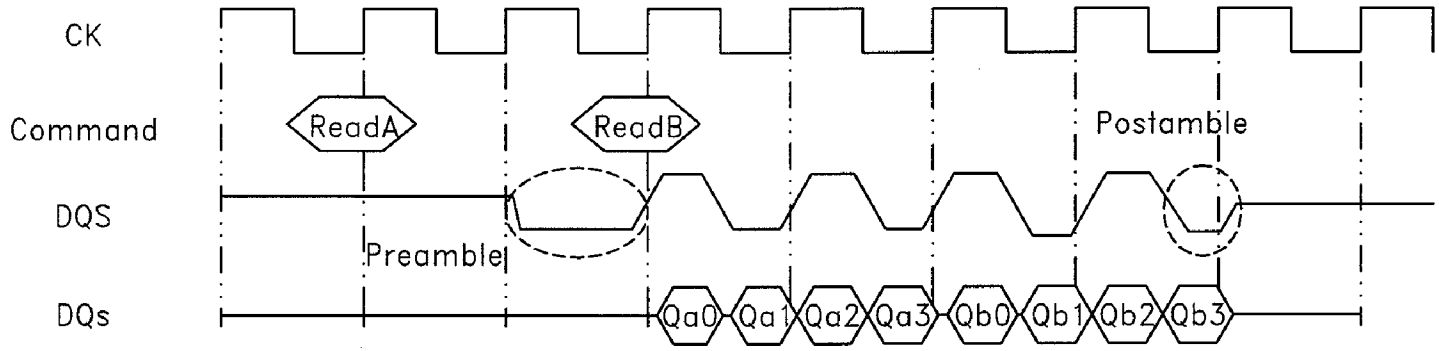
CK
Command
DQS
DQs
ReadA
ReadB
Postamble
Preamble
Qa0
Qa1
Qa2
Qa3
Qb0
Qb1
Qb2
Qb3

FIG. 4A

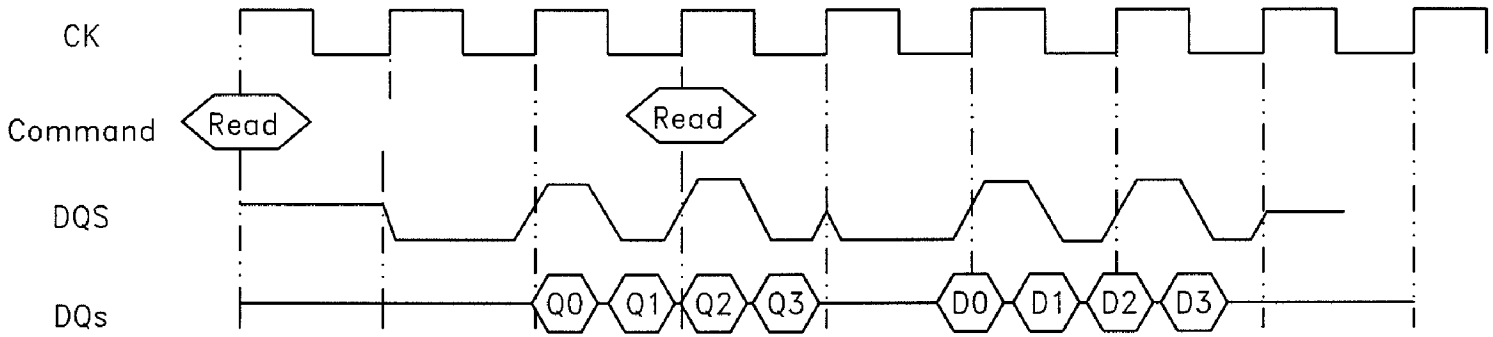
CK
Command
DQS
DQs
Read
Read
Q0
Q1
Q2
Q3
D0
D1
D2
D3

FIG. 4B

FIG. 5

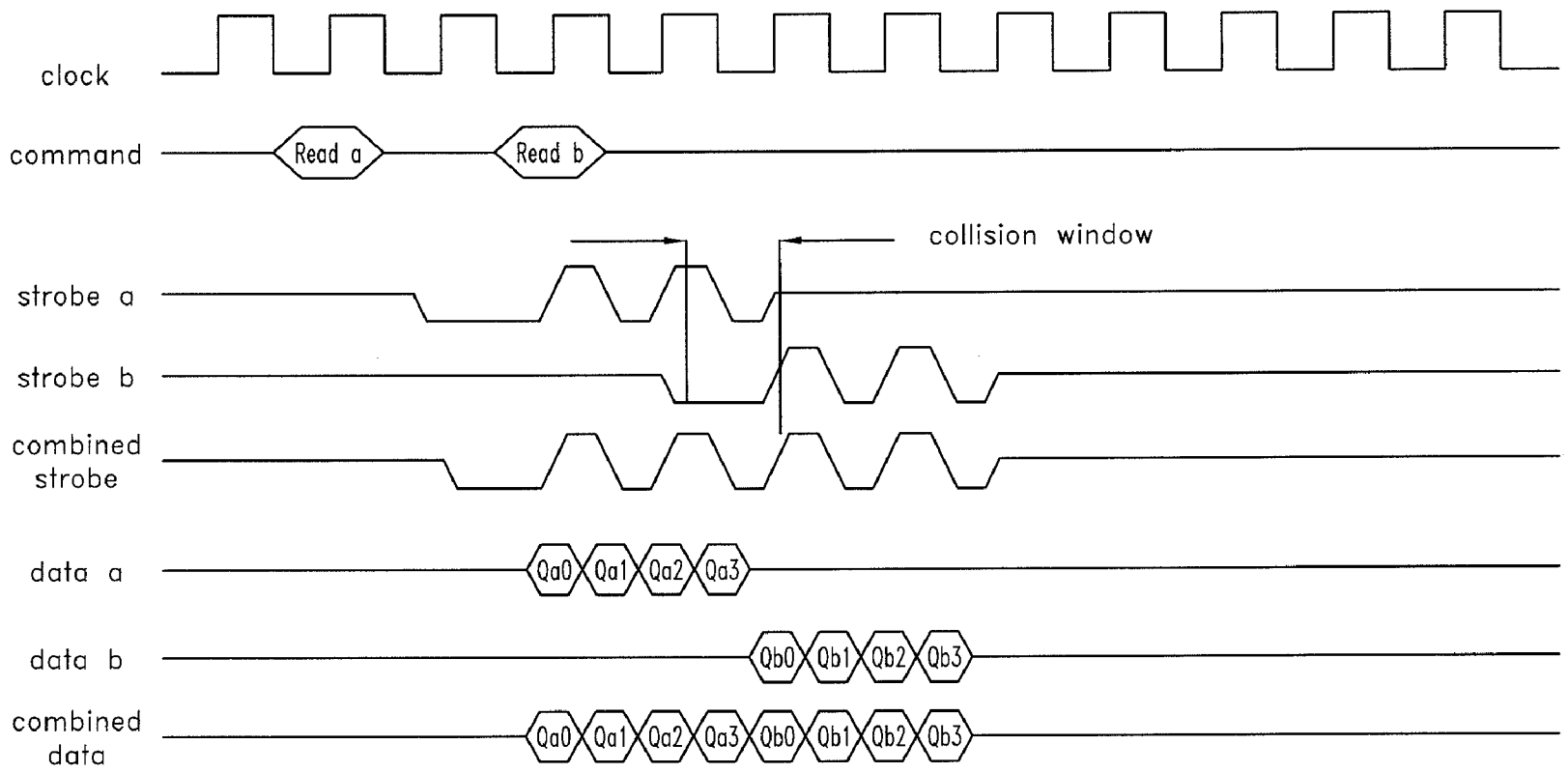
clock
command
Read a
Read b
collision window
strobe a
strobe b
combined strobe
data a
Qa0
Qa1
Qa2
Qa3
data b
Qb0
Qb1
Qb2
Qb3
combined data
Qa0
Qa1
Qa2
Qa3
Qb0
Qb1
Qb2
Qb3

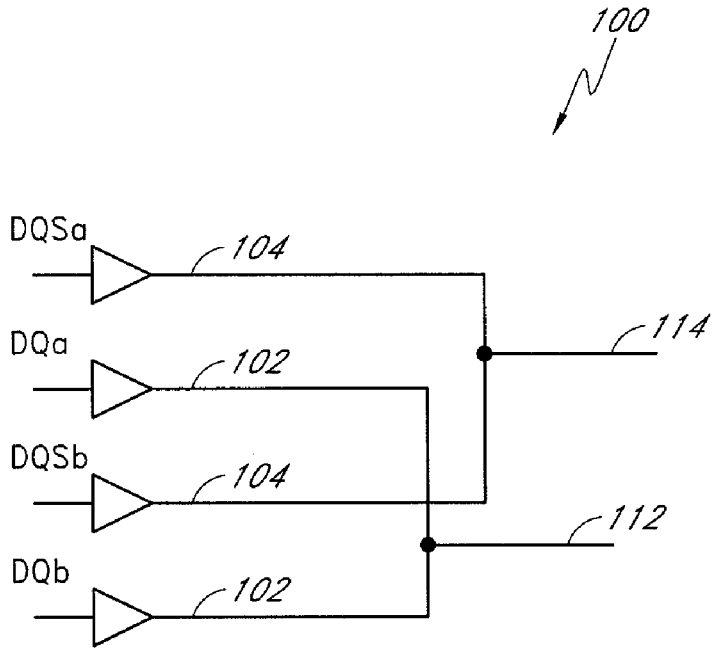
100
DQSa
104
DQa
102
DQSb
104
DQb
102
114
112

FIG. 6A

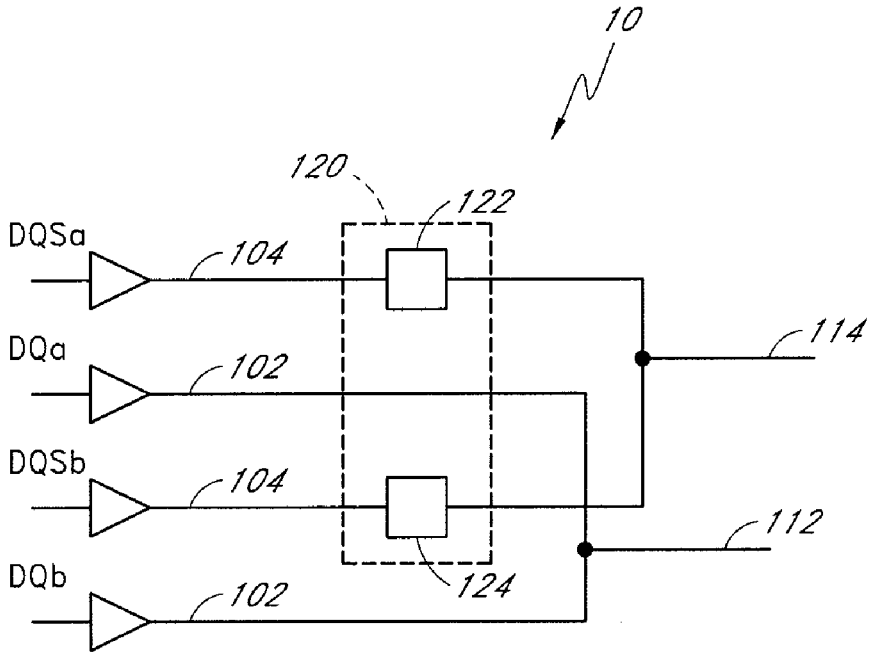
10
120
122
DQSa
104
DQa
102
DQSb
104
DQb
102
124
114
112

FIG. 6B

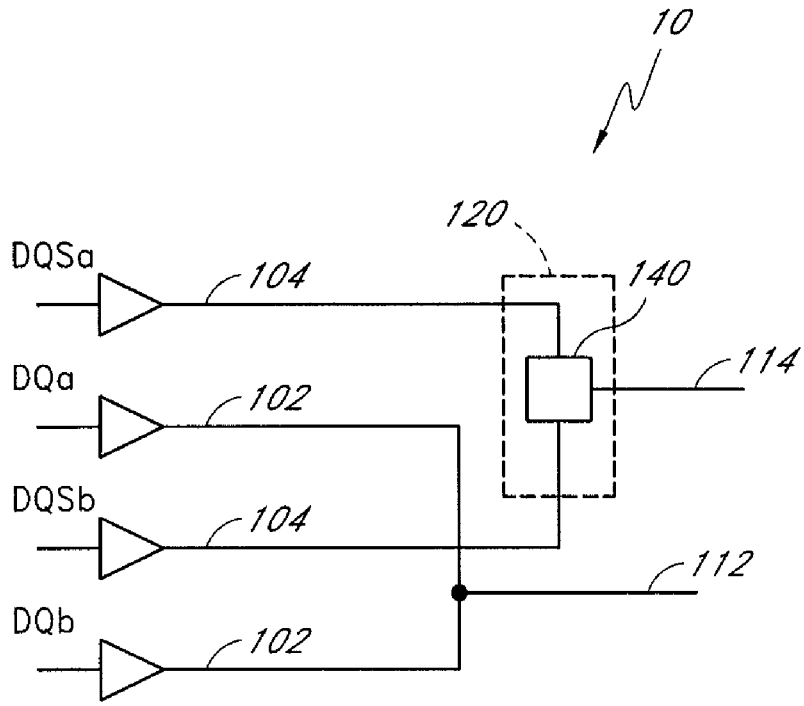
10
120
DQSa
104
140
114
DQa
102
DQSb
104
112
DQb
102

FIG. 6C

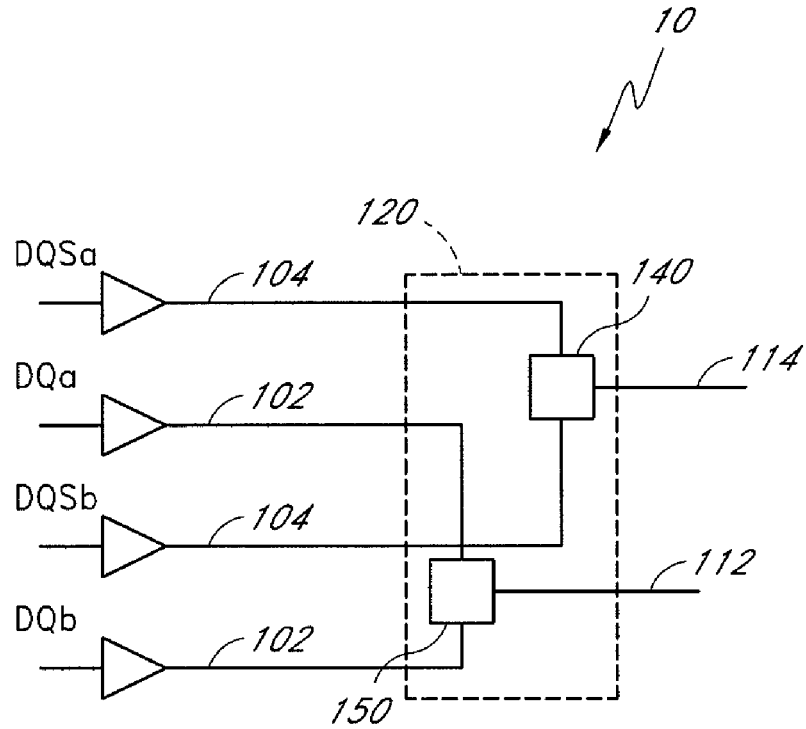
10
120
DQSa
104
140
114
DQa
102
DQSb
104
112
DQb
102
150

FIG. 6D

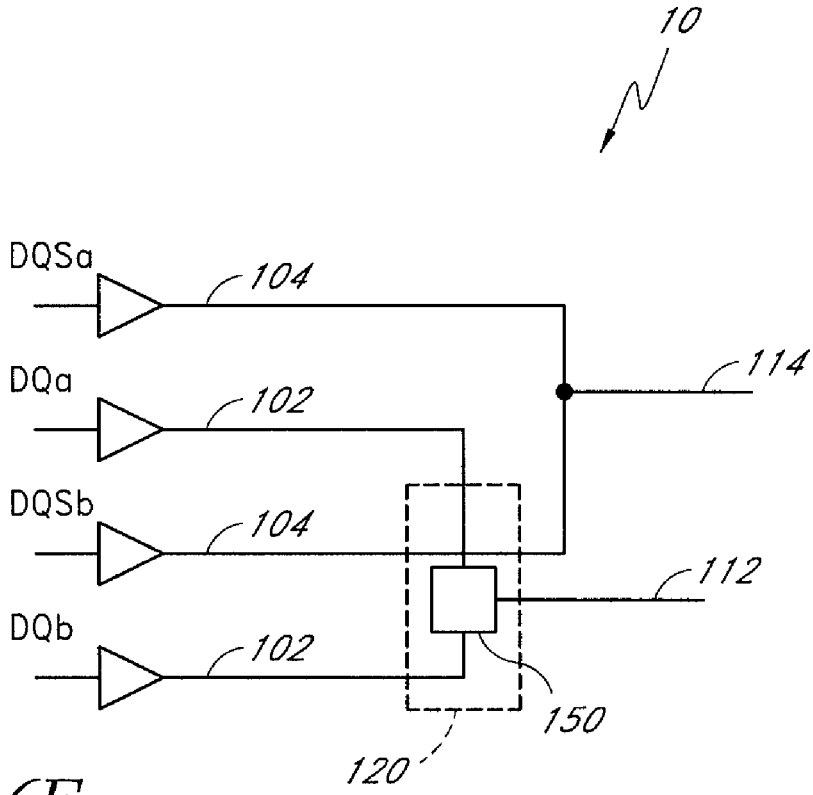

FIG. 6E

FIG. 7

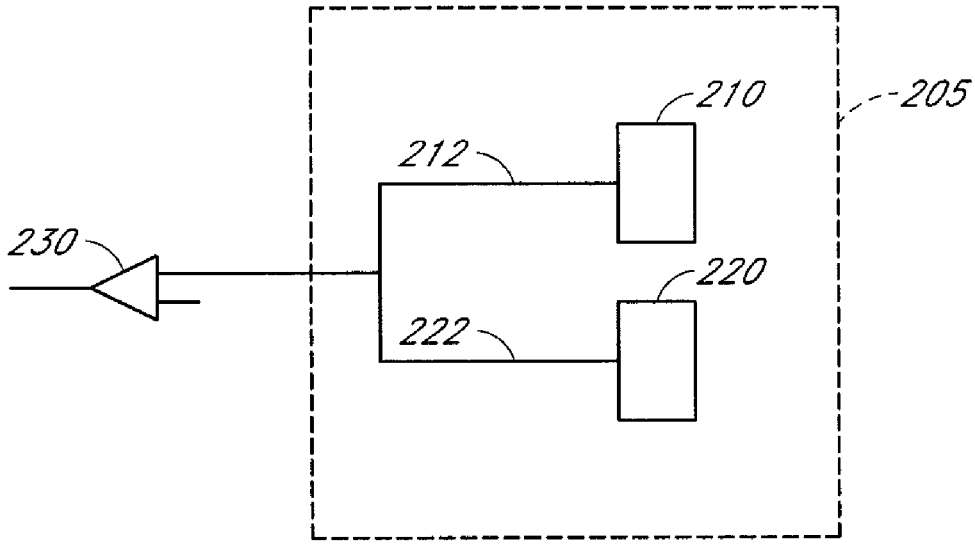

FIG. 8

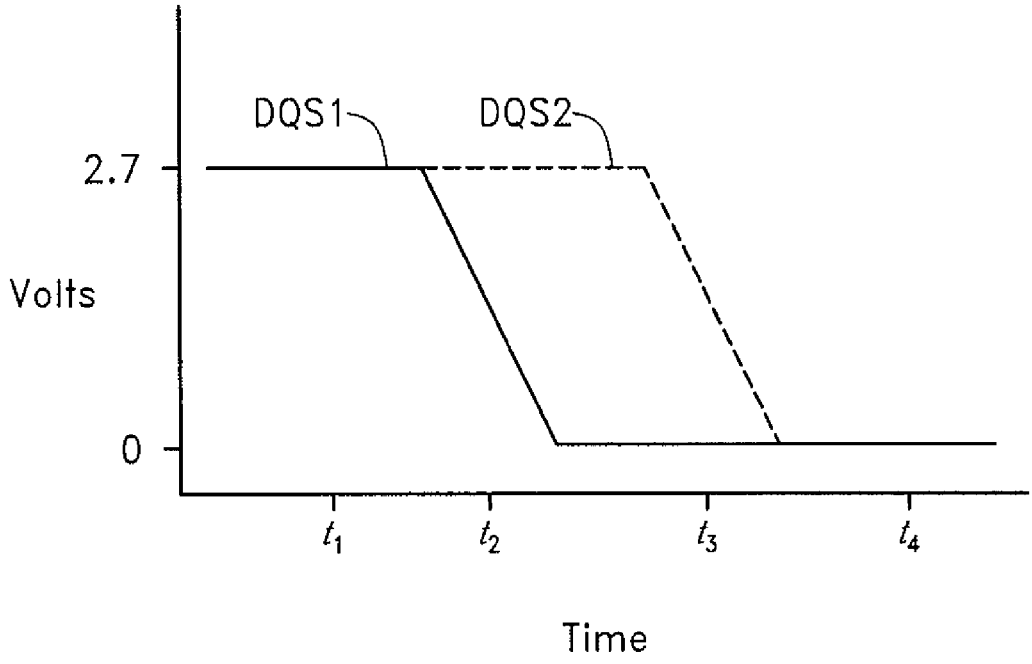

FIG. 9

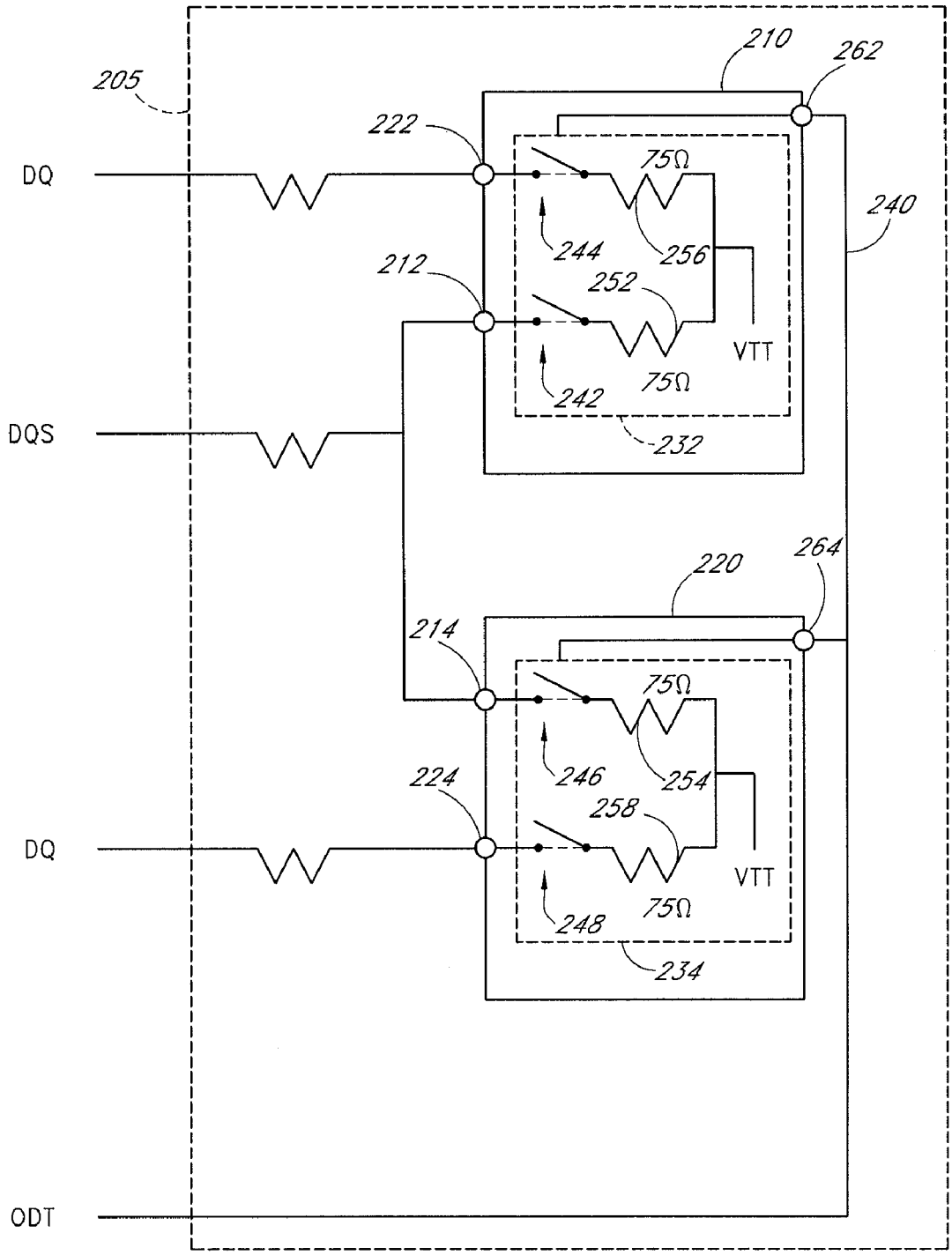
205
210
262
222
DQ
75Ω
240
244
256
212
252
VTT
75Ω
242
DQS
232
220
264
214
75Ω
246
254
224
258
DQ
VTT
75Ω
248
234
ODT

FIG. 10

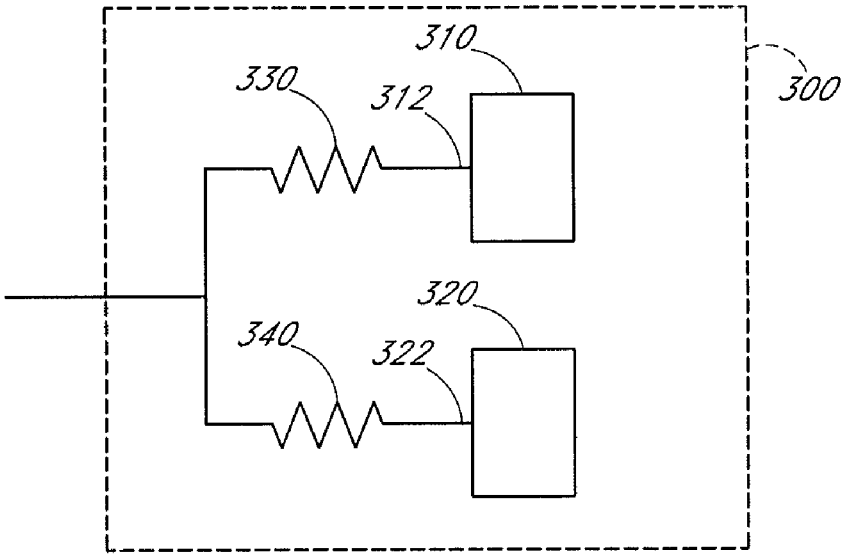

FIG. 11A

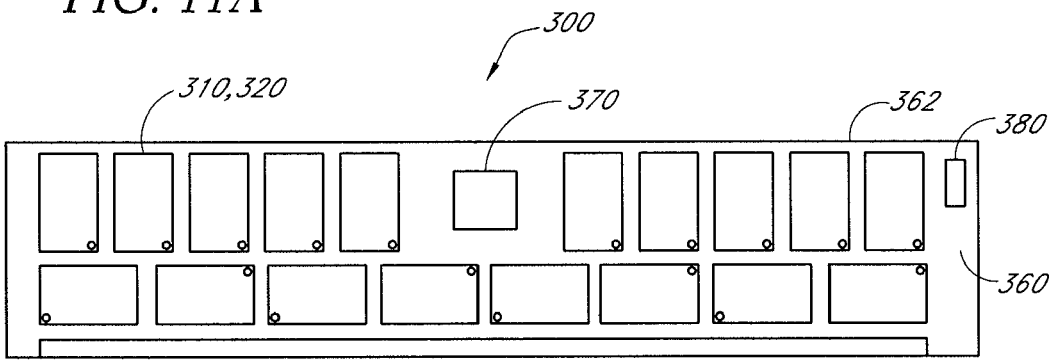

FIG. 11B

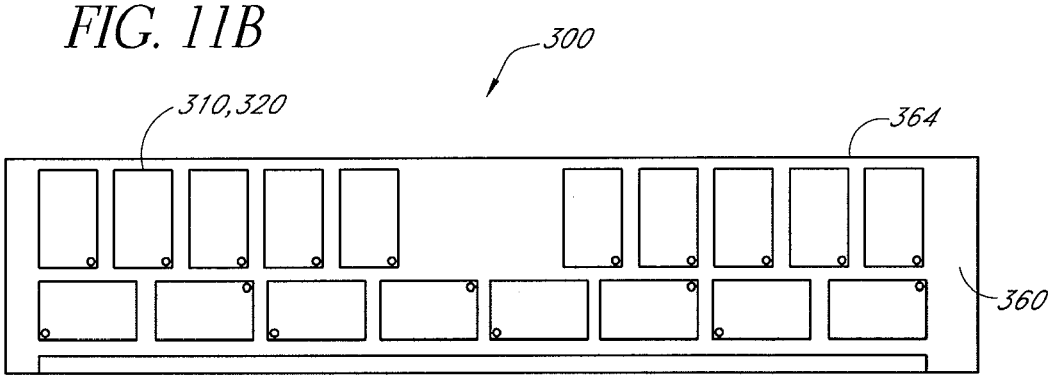

FIG. 12A

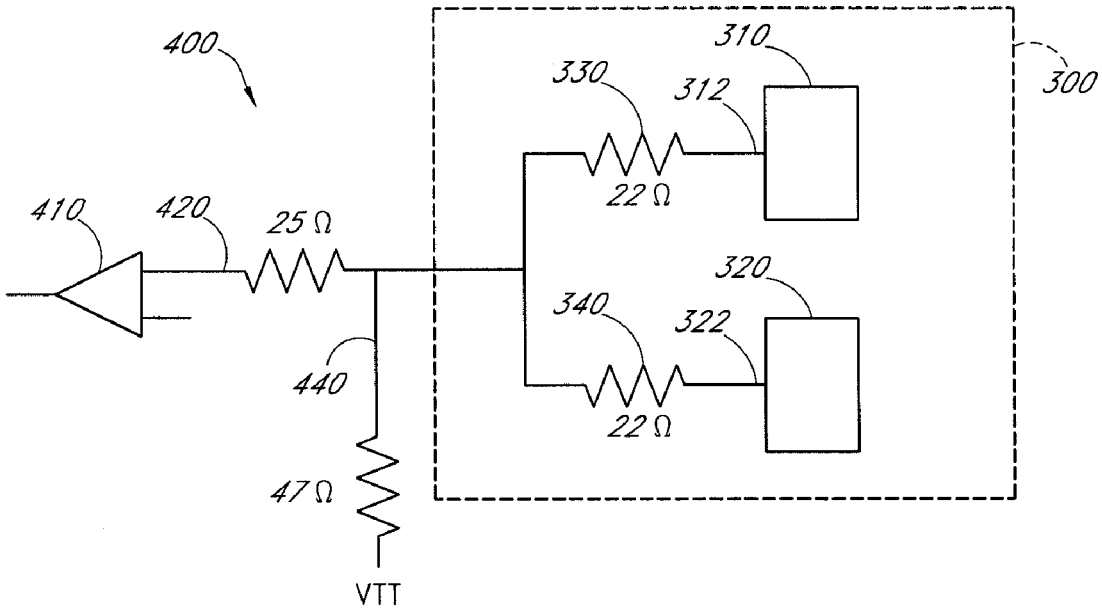

FIG. 12B

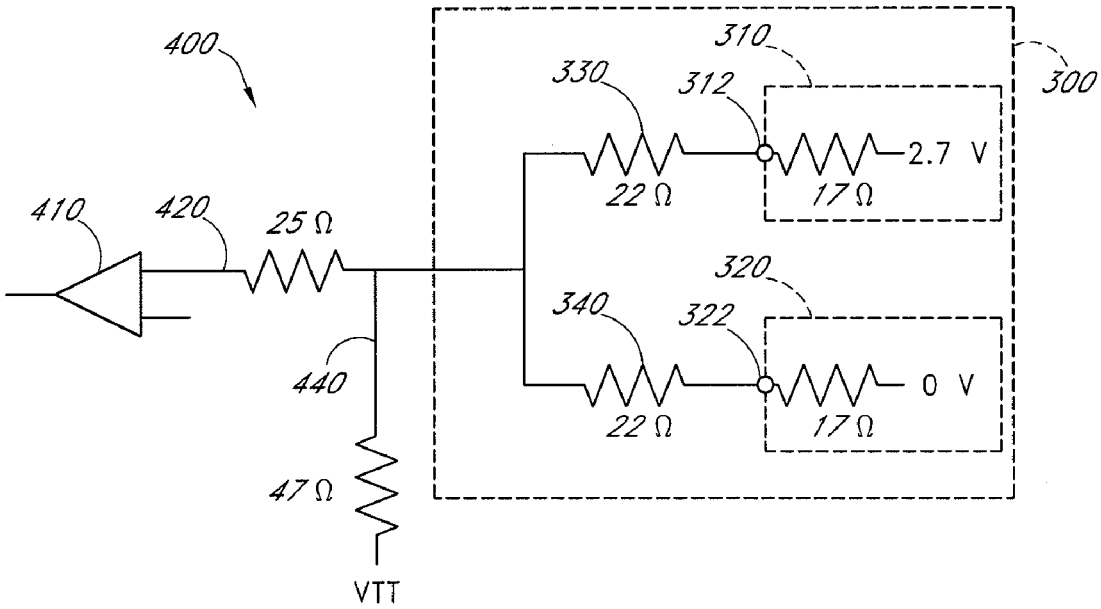

FIG. 13

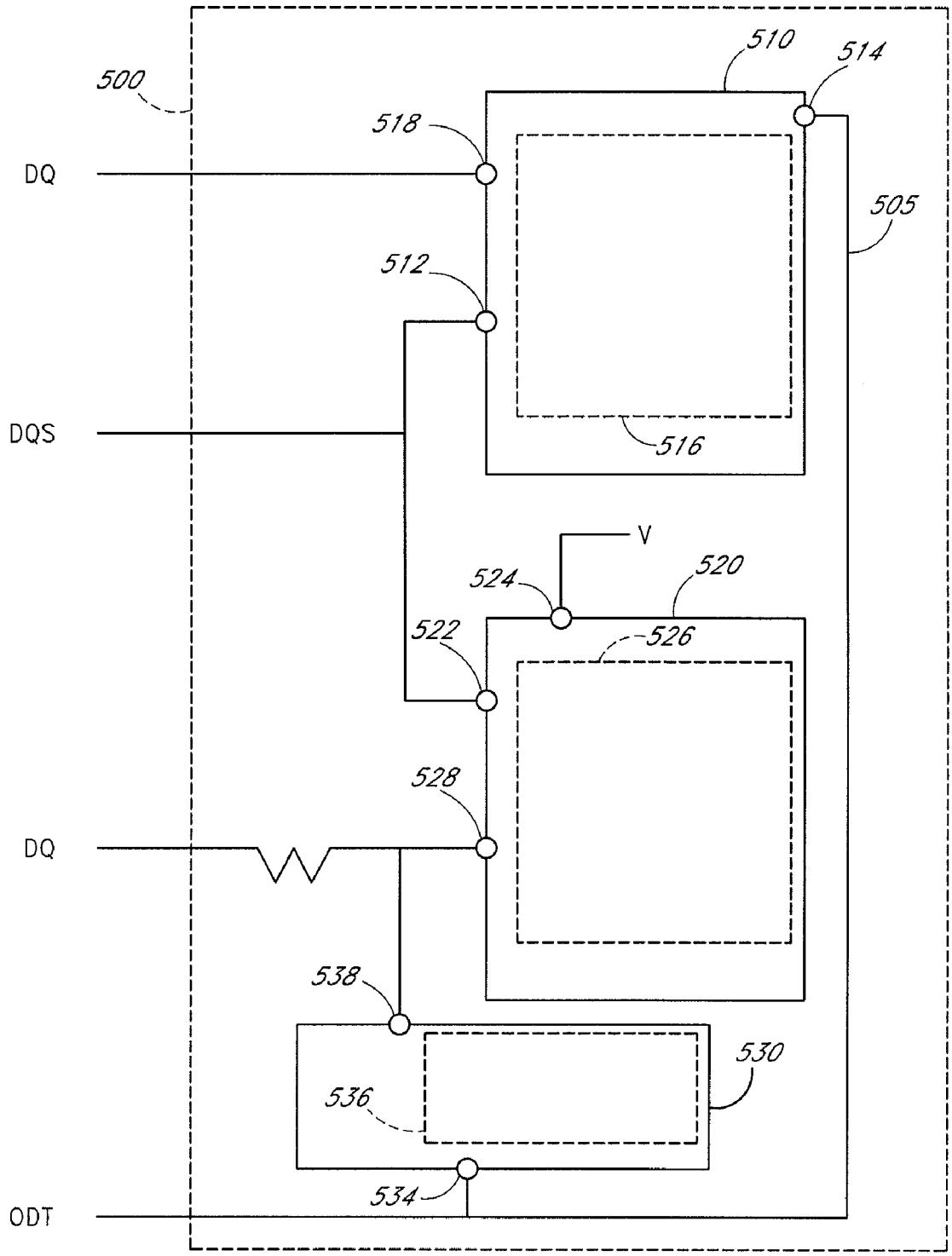
500
510
514
518
DQ
505
512
DQS
516
V
524
520
522
526
528
DQ
538
530
536
534
ODT

FIG. 14

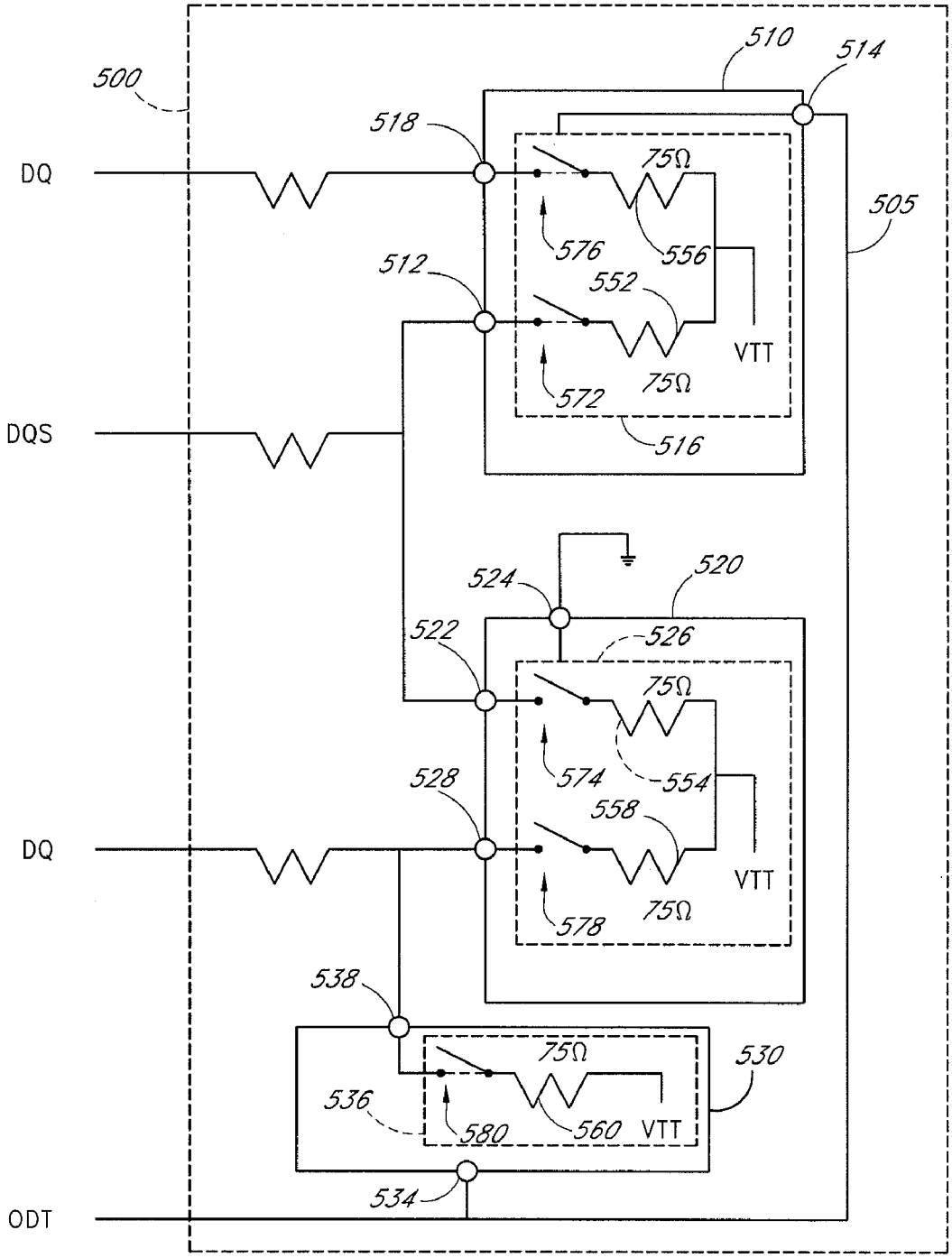
500
510
514
518
DQ
75Ω
505
576
556
512
552
VTT
572
75Ω
DQS
516
524
520
522
526
75Ω
574
554
528
558
DQ
VTT
578
75Ω
538
75Ω
530
536
580
560
VTT
534
ODT

MEMORY MODULE DECODER

CROSS-REFERENCE TO RELATED APPLICATIONS

The present application is a continuation-in-part of U.S. patent application Ser. No. 11/075,395, filed Mar. 7, 2005, which claims the benefit of U.S. Provisional Application No. 60/550,668, filed Mar. 5, 2004 and U.S. Provisional Application No. 60/575,595, filed May 28, 2004. The present application also claims the benefit of U.S. Provisional Application No. 60/588,244, filed Jul. 15, 2004, which is incorporated in its entirety by reference herein.

BACKGROUND OF THE INVENTION

1. Field of the Invention

The present invention relates generally to memory modules of a computer system, and more specifically to devices and methods for improving the performance, the memory capacity, or both, of memory modules.

2. Description of the Related Art

Certain types of memory modules comprise a plurality of dynamic random-access memory (DRAM) devices mounted on a printed circuit board (PCB). These memory modules are typically mounted in a memory slot or socket of a computer system (e.g., a server system or a personal computer) and are accessed by the processor of the computer system. Memory modules typically have a memory configuration with a unique combination of rows, columns, and banks which result in a total memory capacity for the memory module.

For example, a 512-Megabyte memory module (termed a "512-MB" memory module, which actually has 2^{29} or 536,870,912 bytes of capacity) will typically utilize eight 512-Megabit DRAM devices (each identified as a "512-Mb" DRAM device, each actually having 2^{29} or 536,870,912 bits of capacity). The memory cells (or memory locations) of each 512-Mb DRAM device can be arranged in four banks, with each bank having an array of 2^{24} (or 16,777,216) memory locations arranged as 2^{13} rows and 2^{11} columns, and with each memory location having a width of 8 bits. Such DRAM devices with 64M 8-bit-wide memory locations (actually with four banks of 2^{27} or 134,217,728 one-bit memory cells arranged to provide a total of 2^{26} or 67,108,864 memory locations with 8 bits each) are identified as having a "64 Mb×8" or "64M×8-bit" configuration, or as having a depth of 64M and a bit width of 8. Furthermore, certain commercially-available 512-MB memory modules are termed to have a "64M×8-byte" configuration or a "64M×64-bit" configuration with a depth of 64M and a width of 8 bytes or 64 bits.

Similarly, a 1-Gigabyte memory module (termed a "1-GB" memory module, which actually has 2^{30} or 1,073,741,824 bytes of capacity) can utilize eight 1-Gigabit DRAM devices (each identified as a "1-Gb" DRAM device, each actually having 2^{30} or 1,073,741,824 bits of capacity). The memory locations of each 1-Gb DRAM device can be arranged in four banks, with each bank having an array of memory locations with 2^{14} rows and 2^{11} columns, and with each memory location having a width of 8 bits. Such DRAM devices with 128M 8-bit-wide memory locations (actually with a total of 2^{27} or 134,217,728 memory locations with 8 bits each) are identified as having a "128 Mb×8" or "128M×8-bit" configuration, or as having a depth of 128M and a bit width of 8. Furthermore, certain commercially-available 1-GB memory modules are identified as having a "128M×8-byte" configuration or a "128M×64-bit" configuration with a depth of 128M and a width of 8 bytes or 64 bits.

The commercially-available 512-MB (64M×8-byte) memory modules and the 1-GB (128M×8-byte) memory modules described above are typically used in computer systems (e.g., personal computers) which perform graphics applications since such "×8" configurations are compatible with data mask capabilities often used in such graphics applications. Conversely, memory modules with "×4" configurations are typically used in computer systems such as servers which are not as graphics-intensive. Examples of such commercially available "×4" memory modules include, but are not limited to, 512-MB (128M×4-byte) memory modules comprising eight 512-Mb (128 Mb×4) memory devices.

The DRAM devices of a memory module are generally arranged as ranks or rows of memory, each rank of memory generally having a bit width. For example, a memory module in which each rank of the memory module is 64 bits wide is described as having an "×64" organization. Similarly, a memory module having 72-bit-wide ranks is described as having an "×72" organization.

The memory capacity of a memory module increases with the number of memory devices. The number of memory devices of a memory module can be increased by increasing the number of memory devices per rank or by increasing the number of ranks. For example, a memory module with four ranks has double the memory capacity of a memory module with two ranks and four times the memory capacity of a memory module with one rank. Rather than referring to the memory capacity of the memory module, in certain circumstances, the memory density of the memory module is referred to instead.

During operation, the ranks of a memory module are selected or activated by control signals that are received from the processor. Examples of such control signals include, but are not limited to, rank-select signals, also called chip-select signals. Most computer and server systems support one-rank and two-rank memory modules. By only supporting one-rank and two-rank memory modules, the memory density that can be incorporated in each memory slot is limited.

SUMMARY OF THE INVENTION

In certain embodiments, a memory module is connectable to a computer system. The memory module comprises a printed circuit board, a plurality of memory devices coupled to the printed circuit board, and a logic element coupled to the printed circuit board. The plurality of memory devices has a first number of memory devices. The logic element receives a set of input control signals from the computer system. The set of input control signals corresponds to a second number of memory devices smaller than the first number of memory devices. The logic element generates a set of output control signals in response to the set of input control signals. The set of output control signals corresponds to the first number of memory devices.

In certain embodiments, a method utilizes a memory module in a computer system. The method comprises coupling the memory module to the computer system. The memory module comprises a plurality of memory devices arranged in a first number of ranks. The method further comprises inputting a first set of control signals to the memory module. The first set of control signals corresponds to a second number of ranks smaller than the first number of ranks. The method further comprises generating a second set

of control signals in response to the first set of control signals. The second set of control signals corresponds to the first number of ranks.

In certain embodiments, a memory module is connectable to a computer system. The memory module comprises a plurality of memory devices arranged in a first number of ranks. The memory module comprises means for coupling the memory module to the computer system. The memory module further comprises means for inputting a first set of control signals to the memory module. The first set of control signals corresponds to a second number of ranks smaller than the first number of ranks. The memory module further comprises means for generating a second set of control signals in response to the first set of control signals. The second set of control signals corresponds to the first number of ranks.

In certain embodiments, a memory module is connectable to a computer system. The memory module comprises a first memory device having a first data signal line and a first data strobe signal line. The memory module further comprises a second memory device having a second data signal line and a second data strobe signal line. The memory module further comprises a common data signal line connectable to the computer system. The memory module further comprises an isolation device electrically coupled to the first data signal line, to the second data signal line, and to the common data signal line. The isolation device selectively alternates between electrically coupling the first data signal line to the common data signal line and electrically coupling the second data signal line to the common data signal line.

BRIEF DESCRIPTION OF THE DRAWINGS

FIG. **1**A schematically illustrates an exemplary memory module with four ranks of memory devices compatible with certain embodiments described herein.

FIG. **1**B schematically illustrates an exemplary memory module with two ranks of memory devices compatible with certain embodiments described herein.

FIG. **1**C schematically illustrates another exemplary memory module in accordance with certain embodiments described herein.

FIG. **2**A schematically illustrates an exemplary memory module which doubles the rank density in accordance with certain embodiments described herein.

FIG. **2**B schematically illustrates an exemplary logic element compatible with embodiments described herein.

FIG. **3**A schematically illustrates an exemplary memory module which doubles number of ranks in accordance with certain embodiments described herein.

FIG. **3**B schematically illustrates an exemplary logic element compatible with embodiments described herein.

FIG. **4**A shows an exemplary timing diagram of a gapless read burst for a back-to-back adjacent read condition from one memory device.

FIG. **4**B shows an exemplary timing diagram with an extra clock cycle between successive read commands issued to different memory devices for successive read accesses from different memory devices.

FIG. **5** shows an exemplary timing diagram in which the last data strobe of memory device "a" collides with the pre-amble time interval of the data strobe of memory device "b."

FIG. **6**A schematically illustrates a circuit diagram of a conventional memory module showing the interconnections between the DQ data signal lines of two memory devices and their DQS data strobe signal lines.

FIG. **6**B schematically illustrates a circuit diagram of an exemplary memory module comprising an isolation device in accordance with certain embodiments described herein.

FIG. **6**C schematically illustrates an isolation device comprising a logic element which multiplexes the DQS data strobe signal lines from one another.

FIG. **6**D schematically illustrates an isolation device which multiplexes the DQS data strobe signal lines from one another and which multiplexes the DQ data signal lines from one another.

FIG. **6**E schematically illustrates an isolation device which comprises the logic element on the DQ data signal lines but not a corresponding logic element on the DQS data strobe signal lines.

FIG. **7** schematically illustrates an exemplary memory module in which a data strobe (DQS) pin of a first memory device is electrically connected to a DQS pin of a second memory device while both DQS pins are active.

FIG. **8** is an exemplary timing diagram of the voltages applied to the two DQS pins due to non-simultaneous switching.

FIG. **9** schematically illustrates another exemplary memory module in which a DQS pin of a first memory device is connected to a DQS pin of a second memory device.

FIG. **10** schematically illustrates an exemplary memory module in accordance with certain embodiments described herein.

FIGS. **11**A and **11**B schematically illustrate a first side and a second side, respectively, of a memory module with eighteen 64M×4 bit, DDR-1 SDRAM FBGA memory devices on each side of a 184-pin glass-epoxy printed circuit board.

FIGS. **12**A and **12**B schematically illustrate an exemplary embodiment of a memory module in which a first resistor and a second resistor are used to reduce the current flow between the first DQS pin and the second DQS pin.

FIG. **13** schematically illustrates another exemplary memory module compatible with certain embodiments described herein.

FIG. **14** schematically illustrates a particular embodiment of the memory module schematically illustrated by FIG. **13**.

DETAILED DESCRIPTION OF EXEMPLARY EMBODIMENTS

Most high-density memory modules are currently built with 512-Megabit ("512-Mb") memory devices wherein each memory device has a 64M×8-bit configuration. For example, a 1-Gigabyte ("1-GB") memory module with error checking capabilities can be fabricated using eighteen such 512-Mb memory devices. Alternatively, it can be economically advantageous to fabricate a 1-GB memory module using lower-density memory devices and doubling the number of memory devices used to produce the desired word width. For example, by fabricating a 1-GB memory module using thirty-six 256-Mb memory devices with 64M×4-bit configuration, the cost of the resulting 1-GB memory module can be reduced since the unit cost of each 256-Mb memory device is typically lower than one-half the unit cost of each 512-Mb memory device. The cost savings can be significant, even though twice as many 256-Mb memory devices are used in place of the 512-Mb memory devices.

Market pricing factors for DRAM devices are such that higher-density DRAM devices (e.g., 1-Gb DRAM devices) are much more than twice the price of lower-density DRAM devices (e.g., 512-Mb DRAM devices). In other words, the

price per bit ratio of the higher-density DRAM devices is greater than that of the lower-density DRAM devices. This pricing difference often lasts for months or even years after the introduction of the higher-density DRAM devices, until volume production factors reduce the costs of the newer higher-density DRAM devices. Thus, when the cost of a higher-density DRAM device is more than the cost of two lower-density DRAM devices, there is an economic incentive for utilizing pairs of the lower-density DRAM devices to replace individual higher-density DRAM devices.

FIG. **1**A schematically illustrates an exemplary memory module **10** compatible with certain embodiments described herein. The memory module **10** is connectable to a computer system (not shown). The memory module **10** comprises a printed circuit board **20** and a plurality of memory devices **30** coupled to the printed circuit board **20**. The plurality of memory devices **30** has a first number of memory devices. The memory module **10** further comprises a logic element **40** coupled to the printed circuit board **20**. The logic element **40** receives a set of input control signals from the computer system. The set of input control signals correspond to a second number of memory devices smaller than the first number of memory devices. The logic element **40** generates a set of output control signals in response to the set of input control signals. The set of output control signals corresponds to the first number of memory devices.

In certain embodiments, as schematically illustrated in FIG. **1**A, the memory module **10** further comprises a phase-lock loop device **50** coupled to the printed circuit board **20** and a register **60** coupled to the printed circuit board **20**. In certain embodiments, the phase-lock loop device **50** and the register **60** are each mounted on the printed circuit board **20**. In response to signals received from the computer system, the phase-lock loop device **50** transmits clock signals to the plurality of memory devices **30**, the logic element **40**, and the register **60**. The register **60** receives and buffers a plurality of control signals, including address signals (e.g., bank address signals, row address signals, column address signals, gated column address strobe signals, chip-select signals), and transmits corresponding signals to the appropriate memory devices **30**. In certain embodiments, the register **60** comprises a plurality of register devices. While the phase-lock loop device **50**, the register **60**, and the logic element **40** are described herein in certain embodiments as being separate components, in certain other embodiments, two or more of the phase-lock loop device **50**, the register **60**, and the logic element **40** are portions of a single component. Persons skilled in the art are able to select a phase-lock loop device **50** and a register **60** compatible with embodiments described herein.

In certain embodiments, the memory module **10** further comprises electrical components which are electrically coupled to one another and are surface-mounted or embedded on the printed circuit board **20**. These electrical components can include, but are not limited to, electrical conduits, resistors, capacitors, inductors, and transistors. In certain embodiments, at least some of these electrical components are discrete, while in other certain embodiments, at least some of these electrical components are constituents of one or more integrated circuits.

Various types of memory modules **10** are compatible with embodiments described herein. For example, memory modules **10** having memory capacities of 512-MB, 1-GB, 2-GB, 4-GB, 8-GB, as well as other capacities, are compatible with embodiments described herein. In addition, memory modules **10** having widths of 4 bytes, 8 bytes, 16 bytes, 32 bytes, or 32 bits, 64 bits, 128 bits, 256 bits, as well as other widths (in bytes or in bits), are compatible with embodiments described herein. Furthermore, memory modules **10** compatible with embodiments described herein include, but are not limited to, single in-line memory modules (SIMMs), dual in-line memory modules (DIMMs), small-outline DIMMs (SO-DIMMs), unbuffered DIMMs (UDIMMs), registered DIMMs (RDIMMs), fully-buffered DIMM (FB-DIMM), mini-DIMMs, and micro-DIMMs.

In certain embodiments, the printed circuit board **20** is mountable in a module slot of the computer system. The printed circuit board **20** of certain such embodiments has a plurality of edge connections electrically coupled to corresponding contacts of the module slot and to the various components of the memory module **10**, thereby providing electrical connections between the computer system and the components of the memory module **10**.

Memory devices **30** compatible with embodiments described herein include, but are not limited to, random-access memory (RAM), dynamic random-access memory (DRAM), synchronous DRAM (SDRAM), and double-data-rate DRAM (e.g., DDR-1, DDR-2, DDR-3). In addition, memory devices **30** having bit widths of 4, 8, 16, 32, as well as other bit widths, are compatible with embodiments described herein. Memory devices **30** compatible with embodiments described herein have packaging which include, but are not limited to, thin small-outline package (TSOP), ball-grid-array (BGA), fine-pitch BGA (FBGA), micro-BGA (μBGA), mini-BGA (mBGA), and chip-scale packaging (CSP). Memory devices **30** compatible with embodiments described herein are available from a number of sources, including but not limited to, Samsung Semiconductor, Inc. of San Jose, Calif., Infineon Technologies AG of San Jose, Calif., and Micron Technology, Inc. of Boise, Id. Persons skilled in the art can select appropriate memory devices **30** in accordance with certain embodiments described herein.

In certain embodiments, the plurality of memory devices **30** are arranged in a first number of ranks. For example, in certain embodiments, the memory devices **30** are arranged in four ranks, as schematically illustrated by FIG. **1**A. In other embodiments, the memory devices **30** are arranged in two ranks, as schematically illustrated by FIG. **1**B. Other numbers of ranks of the memory devices **30** are also compatible with embodiments described herein.

In certain embodiments, the logic element **40** comprises a programmable-logic device (PLD), an application-specific integrated circuit (ASIC), a field-programmable gate array (FPGA), a custom-designed semiconductor device, or a complex programmable-logic device (CPLD). In certain embodiments, the logic element **40** is a custom device. Sources of logic elements **40** compatible with embodiments described herein include, but are not limited to, Lattice Semiconductor Corporation of Hillsboro, Oreg., Altera Corporation of San Jose, Calif., and Xilinx Incorporated of San Jose, Calif. In certain embodiments, the logic element **40** comprises various discrete electrical elements, while in certain other embodiments, the logic element **40** comprises one or more integrated circuits. Persons skilled in the art can select an appropriate logic element **40** in accordance with certain embodiments described herein.

As schematically illustrated by FIGS. **1**A and **1**B, in certain embodiments, the logic element **40** receives a set of input control signals, which includes address signals (e.g., bank address signals, row address signals, column address signals, gated column address strobe signals, chip-select

signals) and command signals (e.g., refresh, precharge) from the computer system. In response to the set of input control signals, the logic element **40** generates a set of output control signals which includes address signals and command signals.

In certain embodiments, the set of output control signals corresponds to a first number of ranks in which the plurality of memory devices **30** of the memory module **10** are arranged, and the set of input control signals corresponds to a second number of ranks per memory module for which the computer system is configured. The second number of ranks in certain embodiments is smaller than the first number of ranks. For example, in the exemplary embodiment as schematically illustrated by FIG. **1**A, the first number of ranks is four while the second number of ranks is two. In the exemplary embodiment of FIG. **1**B, the first number of ranks is two while the second number of ranks is one. Thus, in certain embodiments, even though the memory module **10** actually has the first number of ranks of memory devices **30**, the memory module **10** simulates a virtual memory module by operating as having the second number of ranks of memory devices **30**. In certain embodiments, the memory module **10** simulates a virtual memory module when the number of memory devices **30** of the memory module **10** is larger than the number of memory devices **30** per memory module for which the computer system is configured to utilize.

In certain embodiments, the computer system is configured for a number of ranks per memory module which is smaller than the number of ranks in which the memory devices **30** of the memory module **10** are arranged. In certain such embodiments, the computer system is configured for two ranks of memory per memory module (providing two chip-select signals CS_0, CS_1) and the plurality of memory modules **30** of the memory module **10** are arranged in four ranks, as schematically illustrated by FIG. **1**A. In certain other such embodiments, the computer system is configured for one rank of memory per memory module (providing one chip-select signal CS_0) and the plurality of memory modules **30** of the memory module **10** are arranged in two ranks, as schematically illustrated by FIG. **1**B.

In the exemplary embodiment schematically illustrated by FIG. **1**A, the memory module **10** has four ranks of memory devices **30** and the computer system is configured for two ranks of memory devices per memory module. The memory module **10** receives row/column address signals or signal bits (A_0-A_{n+1}), bank address signals (BA_0-BA_m), chip-select signals (CS_0 and CS_1), and command signals (e.g., refresh, precharge, etc.) from the computer system. The A_0-A_n row/column address signals are received by the register **60**, which buffers these address signals and sends these address signals to the appropriate ranks of memory devices **30**. The logic element **40** receives the two chip-select signals (CS_0, CS_1) and one row/column address signal (A_{n+1}) from the computer system. Both the logic element **40** and the register **60** receive the bank address signals (BA_0-BA_m) and at least one command signal (e.g., refresh, precharge, etc.) from the computer system.

Logic Tables

Table 1 provides a logic table compatible with certain embodiments described herein for the selection among ranks of memory devices **30** using chip-select signals.

TABLE 1

State	CS_0	CS_1	A_{n+1}	Command	CS_{0A}	CS_{0B}	CS_{1A}	CS_{1B}
1	0	1	0	Active	0	1	1	1
2	0	1	1	Active	1	0	1	1
3	0	1	x	Active	0	0	1	1
4	1	0	0	Active	1	1	0	1
5	1	0	1	Active	1	1	1	0
6	1	0	x	Active	1	1	0	0
7	1	1	x	x	1	1	1	1

Note:

1. Cs_0, CS_1, CS_{0A}, CS_{0B}, CS_{1A}, and CS_{1B} are active low signals.
2. A_{n+1} is an active high signal.
3. 'x' is a Don't Care condition.
4. Command involves a number of command signals that define operations such as refresh, precharge, and other operations.

In Logic State 1: CS_0 is active low, A_{n+1} is non-active, and Command is active. CS_{0A} is pulled low, thereby selecting Rank 0.

In Logic State 2: CS_0 is active low, A_{n+1} is active, and Command is active. CS_{0B} is pulled low, thereby selecting Rank 1.

In Logic State 3: CS_0 is active low, A_{n+1} is Don't Care, and Command is active high. CS_{0A} and CS_{0B} are pulled low, thereby selecting Ranks 0 and 1.

In Logic State 4: CS_1 is active low, A_{n+1} is non-active, and Command is active. CS_{1A} is pulled low, thereby selecting Rank 2.

In Logic State 5: CS_1 is active low, A_{n+1} is active, and Command is active. CS_{1B} is pulled low, thereby selecting Rank 3.

In Logic State 6: CS_1 is active low, A_{n+1} is Don't Care, and Command is active. CS_{1A} and CS_{1B} are pulled low, thereby selecting Ranks 2 and 3.

In Logic State 7: CS_0 and CS_1 are pulled non-active high, which deselects all ranks, i.e., CS_{0A}, CS_{0B}, CS_{1A}, and CS_{1B} are pulled high.

The "Command" column of Table 1 represents the various commands that a memory device (e.g., a DRAM device) can execute, examples of which include, but are not limited to, activation, read, write, precharge, and refresh. In certain embodiments, the command signal is passed through to the selected rank only (e.g., state 4 of Table 1). In such embodiments, the command signal (e.g., read) is sent to only one memory device or the other memory device so that data is supplied from one memory device at a time. In other embodiments, the command signal is passed through to both associated ranks (e.g., state 6 of Table 1). In such embodiments, the command signal (e.g., refresh) is sent to both memory devices to ensure that the memory content of the memory devices remains valid over time. Certain embodiments utilize a logic table such as that of Table 1 to simulate a single memory device from two memory devices by selecting two ranks concurrently.

Table 2 provides a logic table compatible with certain embodiments described herein for the selection among ranks of memory devices **30** using gated CAS signals.

TABLE 2

CS*	RAS*	CAS*	WE*	Density Bit	A_{10}	Command	CAS0*	CAS1*
1	x	x	x	x	x	NOP	x	x
0	1	1	1	x	x	NOP	1	1
0	0	1	1	0	x	ACTIVATE	1	1
0	0	1	1	1	x	ACTIVATE	1	1
0	1	0	1	0	x	READ	0	1
0	1	0	1	1	x	READ	1	0
0	1	0	0	0	x	WRITE	0	1
0	1	0	0	1	x	WRITE	1	0
0	0	1	0	0	0	PRECHARGE	1	1
0	0	1	0	1	0	PRECHARGE	1	1
0	0	1	0	x	1	PRECHARGE	1	1
0	0	0	0	x	x	MODE REG SET	0	0
0	0	0	1	x	x	REFRESH	0	0

In certain embodiments in which the density bit is a row address bit, for read/write commands, the density bit is the value latched during the activate command for the selected bank.

Serial-Presence-Detect Device

Memory modules typically include a serial-presence detect (SPD) device **70** (e.g., an electrically-erasable-programmable read-only memory or EEPROM device) comprising data which characterize various attributes of the memory module, including but not limited to, the number of row addresses the number of column addresses, the data width of the memory devices, the number of ranks, the memory density per rank, the number of memory devices, and the memory density per memory device. The SPD device **70** communicates this data to the basic input/output system (BIOS) of the computer system so that the computer system is informed of the memory capacity and the memory configuration available for use and can configure the memory controller properly for maximum reliability and performance.

For example, for a commercially-available 512-MB (64M×8-byte) memory module utilizing eight 512-Mb memory devices each with a 64M×8-bit configuration, the SPD device contains the following SPD data (in appropriate bit fields of these bytes):

Byte **3**: Defines the number of row address bits in the DRAM device in the memory module [13 for the 512-Mb memory device].

Byte **4**: Defines the number of column address bits in the DRAM device in the memory module [11 for the 512-Mb memory device].

Byte **13**: Defines the bit width of the primary DRAM device used in the memory module [8 bits for the 512-Mb (64M×8-bit) memory device].

Byte **14**: Defines the bit width of the error checking DRAM device used in the memory module [8 bits for the 512-Mb (64M×8-bit) memory device].

Byte **17**: Defines the number of banks internal to the DRAM device used in the memory module [4 for the 512-Mb memory device].

In a further example, for a commercially-available 1-GB (128M×8-byte) memory module utilizing eight 1-Gb memory devices each with a 128M×8-bit configuration, as described above, the SPD device contains the following SPD data (in appropriate bit fields of these bytes):

Byte **3**: Defines the number of row address bits in the DRAM device in the memory module [14 for the 1-Gb memory device].

Byte **4**: Defines the number of column address bits in the DRAM device in the memory module [11 for the 1-Gb memory device].

Byte **13**: Defines the bit width of the primary DRAM device used in the memory module [8 bits for the 1-Gb (128M×8-bit) memory device].

Byte **14**: Defines the bit width of the error checking DRAM device used in the memory module [8 bits for the 1-Gb (128M×8-bit) memory device].

Byte **17**: Defines the number of banks internal to the DRAM device used in the memory module [4 for the 1-Gb memory device].

In certain embodiments, the SPD device **70** comprises data which characterize the memory module **10** as having fewer ranks of memory devices than the memory module **10** actually has, with each of these ranks having more memory density. For example, for a memory module **10** compatible with certain embodiments described herein having two ranks of memory devices **30**, the SPD device **70** comprises data which characterizes the memory module **10** as having one rank of memory devices with twice the memory density per rank. Similarly, for a memory module **10** compatible with certain embodiments described herein having four ranks of memory devices **30**, the SPD device **70** comprises data which characterizes the memory module **10** as having two ranks of memory devices with twice the memory density per rank. In addition, in certain embodiments, the SPD device **70** comprises data which characterize the memory module **10** as having fewer memory devices than the memory module **10** actually has, with each of these memory devices having more memory density per memory device. For example, for a memory module **10** compatible with certain embodiments described herein, the SPD device **70** comprises data which characterizes the memory module **10** as having one-half the number of memory devices that the memory module **10** actually has, with each of these memory devices having twice the memory density per memory device.

FIG. **1C** schematically illustrates an exemplary memory module **10** in accordance with certain embodiments described herein. The memory module **10** comprises a pair of substantially identical memory devices **31**, **33**. Each memory device **31**, **33** has a first bit width, a first number of banks of memory locations, a first number of rows of memory locations, and a first number of columns of memory locations. The memory module **10** further comprises an SPD device **70** comprising data that characterizes the pair of memory devices **31**, **33**. The data characterize the pair of memory devices **31**, **33** as a virtual memory device having a second bit width equal to twice the first bit width, a second

number of banks of memory locations equal to the first number of banks, a second number of rows of memory locations equal to the first number of rows, and a second number of columns of memory locations equal to the first number of columns.

In certain such embodiments, the SPD device **70** of the memory module **10** is programmed to describe the combined pair of lower-density memory devices **31**, **33** as one virtual or pseudo-higher-density memory device. In an exemplary embodiment, two 512-Mb memory devices, each with a 128M×4-bit configuration, are used to simulate one 1-Gb memory device having a 128M×8-bit configuration. The SPD device **70** of the memory module **10** is programmed to describe the pair of 512-Mb memory devices as one virtual or pseudo-1-Gb memory device.

For example, to fabricate a 1-GB (128M×8-byte) memory module, sixteen 512-Mb (128M×4-bit) memory devices can be used. The sixteen 512-Mb (128M×4-bit) memory devices are combined in eight pairs, with each pair serving as a virtual or pseudo-1-Gb (128M×8-bit) memory device. In certain such embodiments, the SPD device **70** contains the following SPD data (in appropriate bit fields of these bytes):

Byte **3**: 13 row address bits.

Byte **4**: 12 column address bits.

Byte **13**: 8 bits wide for the primary virtual 1-Gb (128M×8-bit) memory device.

Byte **14**: 8 bits wide for the error checking virtual 1-Gb (128M×8-bit) memory device.

Byte **17**: 4 banks.

In this exemplary embodiment, bytes **3**, **4**, and **17** are programmed to have the same values as they would have for a 512-MB (128M×4-byte) memory module utilizing 512-Mb (128M×4-bit) memory devices. However, bytes **13** and **14** of the SPD data are programmed to be equal to 8, corresponding to the bit width of the virtual or pseudo-higher-density 1-Gb (128M×8-bit) memory device, for a total capacity of 1-GB. Thus, the SPD data does not describe the actual-lower-density memory devices, but instead describes the virtual or pseudo-higher-density memory devices. The BIOS accesses the SPD data and recognizes the memory module as having 4 banks of memory locations arranged in 2^{13} rows and 2^{12} columns, with each memory location having a width of 8 bits rather than 4 bits.

In certain embodiments, when such a memory module **10** is inserted in a computer system, the computer system's memory controller then provides to the memory module **10** a set of input control signals which correspond to the number of ranks or the number of memory devices reported by the SPD device **70**. For example, placing a two-rank memory module **10** compatible with certain embodiments described herein in a computer system compatible with one-rank memory modules, the SPD device **70** reports to the computer system that the memory module **10** only has one rank. The logic element **40** then receives a set of input control signals corresponding to a single rank from the computer system's memory controller, and generates and transmits a set of output control signals corresponding to two ranks to the appropriate memory devices **30** of the memory module **10**. Similarly, when a two-rank memory module **10** compatible with certain embodiments described herein is placed in a computer system compatible with either one- or two-rank memory modules, the SPD device **70** reports to the computer system that the memory module **10** only has one rank. The logic element **40** then receives a set of input control signals corresponding to a single rank from the computer system's memory controller, and generates and transmits a set of output control signals corresponding to two ranks to the appropriate memory devices **30** of the memory module **10**. Furthermore, a four-rank memory module **10** compatible with certain embodiments described herein simulates a two-rank memory module whether the memory module **10** is inserted in a computer system compatible with two-rank memory modules or with two- or four-rank memory modules. Thus, by placing a four-rank memory module **10** compatible with certain embodiments described herein in a module slot that is four-rank-ready, the computer system provides four chip-select signals, but the memory module **10** only uses two of the chip-select signals.

Memory Density Multiplication

In certain embodiments, two memory devices having a memory density are used to simulate a single memory device having twice the memory density, and an additional address signal bit is used to access the additional memory. Similarly, in certain embodiments, two ranks of memory devices having a memory density are used to simulate a single rank of memory devices having twice the memory density, and an additional address signal bit is used to access the additional memory. As used herein, such simulations of memory devices or ranks of memory devices are termed as "memory density multiplication," and the term "density transition bit" is used to refer to the additional address signal bit which is used to access the additional memory.

In certain embodiments utilizing memory density multiplication embodiments, the memory module **10** can have various types of memory devices **30** (e.g., DDR1, DDR2, DDR3, and beyond). The logic element **40** of certain such embodiments utilizes implied translation logic equations having variations depending on whether the density transition bit is a row, column, or internal bank address bit. In addition, the translation logic equations of certain embodiments vary depending on the type of memory module **10** (e.g., UDIMM, RDIMM, FBDIMM, etc.). Furthermore, in certain embodiments, the translation logic equations vary depending on whether the implementation multiplies memory devices per rank or multiplies the number of ranks per memory module.

Table 3A provides the numbers of rows and columns for DDR-1 memory devices, as specified by JEDEC standard JESD79D, "Double Data Rate (DDR) SDRAM Specification," published February 2004, and incorporated in its entirety by reference herein.

TABLE 3A

	128-Mb	256-Mb	512-Mb	1-Gb
Number of banks	4	4	4	4
Number of row address bits	12	13	13	14
Number of column address bits for "×4" configuration	11	11	12	12
Number of column address bits for "×8" configuration	10	10	11	11
Number of column address bits for "×16" configuration	9	9	10	10

As described by Table 3A, 512-Mb (128M×4-bit) DRAM devices have 2^{13} rows and 2^{12} columns of memory locations, while 1-Gb (128M×8-bit) DRAM devices have 2^{14} rows and 2^{11} columns of memory locations. Because of the differences in the number of rows and the number of columns for the two types of memory devices, complex address translation procedures and structures would typically be needed to fabricate a 1-GB (128M×8-byte) memory module using sixteen 512-Mb (128M×4-bit) DRAM devices.

Table 3B shows the device configurations as a function of memory density for DDR2 memory devices.

TABLE 3B

	Number of Rows	Number of Columns	Number of Internal Banks	Page Size (×4s or ×8s)
256 Mb	13	10	4	1 KB
512 Mb	14	10	4	1 KB
1 Gb	14	10	8	1 KB
2 Gb	15	10	8	1 KB
4 Gb	to be determined	to be determined	8	1 KB

Table 4 lists the corresponding density transition bit for the density transitions between the DDR2 memory densities of Table 3B.

TABLE 4

Density Transition	Density Transition Bit
256 Mb to 512 Mb	A_{13}
512 Mb to 1 Gb	BA_2
1 Gb to 2 Gb	A_{14}
2 Gb to 4 Gb	to be determined

Because the standard memory configuration of 4-Gb DDR2 SDRAM modules is not yet determined by the appropriate standards-setting organization, Tables 3B and 4 have "to be determined" in the appropriate table entries.

In certain embodiments, the logic translation equations are programmed in the logic element **40** by hardware, while in certain other embodiments, the logic translation equations are programmed in the logic element **40** by software. Examples 1 and 2 provide exemplary sections of Verilog code compatible with certain embodiments described herein. As described more fully below, the code of Examples 1 and 2 includes logic to reduce potential problems due to "back-to-back adjacent read commands which cross memory device boundaries or "BBARX." Persons skilled in the art are able to provide additional logic translation equations compatible with embodiments described herein.

An exemplary section of Verilog code compatible with memory density multiplication from 512 Mb to 1 Gb using DDR2 memory devices with the BA_2 density transition bit is listed below in Example 1. The exemplary code of Example 1 corresponds to a logic element **40** which receives one chip-select signal from the computer system and which generates two chip-select signals.

EXAMPLE 1

```
always @(posedge clk_in)
  begin
    rs0N_R <= rs0_in_N;        // cs0
    rasN_R <= ras_in_N;
    casN_R <= cas_in_N;
    weN_R <= we_in_N;
  end
// Gated Chip Selects
assign    pcs0a_1 = (~rs0_in_N & ~ras_in_N & ~cas_in_N)                    // ref,md reg set
          | (~rs0_in_N & ras_in_N & cas_in_N)                              // ref exit, pwr dn
          | (~rs0_in_N & ~ras_in_N & cas_in_N & ~we_in_N & a10_in)         // pchg all
          | (~rs0_in_N & ~ras_in_N & cas_in_N & ~we_in_N & ~a10_in & ~ba2_in)// pchg single bnk
          | (~rs0_in_N & ~ras_in_N & cas_in_N & we_in_N      & ~ba2_in)   // activate
          | (~rs0_in_N & ras_in_N & ~cas_in_N       & ~ba2_in)             // xfr
          ;
assign    pcs0b_1 = (~rs0_in_N & ~ras_in_N & ~cas_in_N)                    // ref,md reg set
          | (~rs0_in_N & ras_in_N & cas_in_N)                              // ref exit, pwr dn
          | (~rs0_in_N & ~ras_in_N & cas_in_N & ~we_in_N & a10_in)         // pchg all
          | (~rs0_in_N & ~ras_in_N & cas_in_N & ~we_in_N & ~a10_in & ba2_in)// pchg single bnk
          | (~rs0_in_N & ~ras_in_N & cas_in_N & we_in_N      & ba2_in)    // activate
          | (~rs0_in_N & ras_in_N & ~cas_in_N       & ba2_in)              // xfr
          ;
//-------------------------------------
 always @(posedge_clk_in)
  begin
    a4_r <= a4_in ;
    a5_r <= a5_in ;
    a6_r <= a6_in ;
    a10_r <= a10_in ;
    ba0_r <= ba0_in ;
    ba1_r <= ba1_in ;
    ba2_r <= ba2_in ;
    q_mrs_cmd_cyc1 <= q_mrs_cmd ;
  end
//////////////////////////////////////////////////////////////////////////
// determine the cas latency
//////////////////////////////////////////////////////////////////////////
assign q_mrs_cmd_r = (!rasN_R & !casN_R & !weN_R)
    & !rs0N_R
```

-continued

```
    & (!ba0_r & !ba1_r)
    ;       // md reg set cmd
 always @(posedge clk_in)
  if (~reset_N)        // lmr
    cl3 <= 1 'b1 ;
  else if (q_mrs_cmd_cyc1)        // load mode reg cmd
  begin
    cl3 <= (~a6_r & a5_r & a4_r ) ;
  end
 always @(posedge clk_in)
  if (~reset_N)        // reset
    cl2 <= 1 'b0 ;
  else if (q_mrs_cmd_cyc1)        // load mode reg cmd
  begin
    cl2 <= (~a6_r & a5_r & ~a4_r ) ;
  end
always @(posedge clk_in)
  if (~reset_N)        // reset
    cl4 <= 1 'b0 ;
  else if (q_mrs_cmd_cyc1)        // load mode reg cmd
  begin
    cl4 <= (a6_r & ~a5_r & ~a4_r ) ;
  end
always @(posedge clk_in)
  if (~reset_N)        cl5 <= 1 'b0 ;
  else if (q_mrs_cmd_cyc1)        // load mode reg cmd
  begin
    cl5 <= (a6_r & ~a5_r & a4_r ) ;
  end
assign    pre_cyc2_enfet = (wr_cmd_cyc1 & acs_cyc1 & cl3)   // wr brst cl3 preamble
                ;
assign    pre_cyc3_enfet = (rd_cmd_cyc2 & cl3)              // rd brst cl3 preamble
                | (wr_cmd_cyc2 & cl3)                       // wr brst cl3 1st pair
                | (wr_cmd_cyc2 & cl4)                       // wr brst cl4 preamble
                ;
assign    pre_cyc4_enfet = (wr_cmd_cyc3 & cl3)              // wr brst cl3 2nd pair
                | (wr_cmd_cyc3 & cl4)                       // wr brst cl4 1st pair
                | (rd_cmd_cyc3 & cl3)                       // rd brst cl3 1st pair
                | (rd_cmd_cyc3 & cl4)                       // rd brst cl4 preamble
                ;
assign    pre_cyc5_enfet = (rd_cmd_cyc4 & cl3)              // rd brst cl3 2nd pair
                | (wr_cmd_cyc4 & cl4)                       // wr brst cl4 2nd pair
                | (rd_cmd_cyc4 & cl4)                       // rd brst cl4 1st pair
                ;
// dq
assign    pre_dq_cyc = pre_cyc2_enfet
                | pre_cyc3_enfet
                | pre_cyc4_enfet
                | pre_cyc5_enfet
                ;
assign    pre_dq_ncyc = enfet_cyc2
                | enfet_cyc3
                | enfet_cyc4
                | enfet_cyc5
                ;
// dqs
assign    pre_dqsa_cyc = (pre_cyc2_enfet & ~ba2_r)
                | (pre_cyc3_enfet & ~ba2_cyc2)
                | (pre_cyc4_enfet & ~ba2_cyc3)
                | (pre_cyc5_enfet & ~ba2_cyc4)
                ;
assign    pre_dqsb_cyc = (pre_cyc2_enfet & ba2_r)
                | (pre_cyc3_enfet & ba2_cyc2)
                | (pre_cyc4_enfet & ba2_cyc3)
                | (pre_cyc5_enfet & ba2_cyc4)
                ;
assign    pre_dqsa_ncyc = (enfet_cyc2 & ~ba2_cyc2)
                | (enfet_cyc3 & ~ba2_cyc3)
                | (enfet_cyc4 & ~ba2_cyc4)
                | (enfet_cyc5 & ~ba2_cyc5)
                ;
assign    pre_dqsb_ncyc = (enfet_cyc2 & ba2_cyc2)
                | (enfet_cyc3 & ba2_cyc3)
                | (enfet_cyc4 & ba2_cyc4)
                | (enfet_cyc5 & ba2_cyc5)
                ;
always @(posedge clk_in)
  begin
    acs_cyc2 <= acs_cyc1 ;        // cs active
```

-continued

```
      ba2__cyc2 <= ba2__r ;
      ba2__cyc3 <= ba2__cyc2 ;
      ba2__cyc4 <= ba2__cyc3 ;
      ba2__cyc5 <= ba2__cyc4 ;
      rd__cmd__cyc2 <= rd__cmd__cyc1 & acs__cyc1;
      rd__cmd__cyc3 <= rd__cmd__cyc2 ;
      rd__cmd__cyc4 <= rd__cmd__cyc3 ;
      rd__cmd__cyc5 <= rd__cmd__cyc4 ;
      rd__cmd__cyc6 <= rd__cmd__cyc5 ;
      rd__cmd__cyc7 <= rd__cmd__cyc6 ;
      wr__cmd__cyc2 <= wr__cmd__cyc1 & acs__cyc1;
      wr__cmd__cyc3 <= wr__cmd__cyc2 ;
      wr__cmd__cyc4 <= wr__cmd__cyc3 ;
      wr__cmd__cyc5 <= wr__cmd__cyc4 ;
    end
  always @(negedge clk__in)
    begin
      dq__ncyc <= dq__cyc;
      dqs__ncyc__a <= dqs__cyc__a;
      dqs__ncyc__b <= dqs__cyc__b;
    end
// DQ FET enables
assign      enq__fet1 = dq__cyc | dq__ncyc              ;
assign      enq__fet2 = dq__cyc | dq__ncyc ;
assign      enq__fet3 = dq__cyc | dq__ncyc              ;
assign        enq__fet4 = dq__cyc | dq__ncyc ;
assign        enq__fet5 = dq__cyc | dq__ncyc ;
// DQS FET enables
assign        ens__fet1a = dqs__cyc__a | dqs__ncyc__a   ;
assign        ens__fet2a = dqs__cyc__a | dqs__ncyc__a   ;
assign        ens__fet3a = dqs__cyc__a | dqs__ncyc__a   ;
assign        ens__fet1b = dqs__cyc__b | dqs__ncyc__b   ;
assign        ens__fet2b = dqs__cyc__b | dqs__ncyc__b   ;
assign        ens__fet3b = dqs__cyc__b | dqs__ncyc__b   ;
```

Another exemplary section of Verilog code compatible with memory density multiplication from 256 Mb to 512 Mb using DDR2 memory devices and gated CAS signals with the row A_{13} density transition bit is listed below in Example 2. The exemplary code of Example 2 corresponds to a logic element **40** which receives one gated CAS signal from the computer system and which generates two gated CAS signals.

EXAMPLE 2

```
// latched a13 flags cs0, banks 0-3
  always @(posedge clk__in)
    if (actv__cmd__R & ~rs0N__R & ~bnk1__R & ~bnk0__R) // activate
    begin
          l__a13__00 <= a13__r ;
    end
  always @(posedge clk__in)
    if (actv__cmd__R & ~rs0N__R & ~bnk1__R & bnk0__R) // activate
    begin
          l__a13__01 <= a13__r ;
    end
  always @(posedge clk__in)
    if (actv__cmd__R & ~rs0N__R & bnk1__R & ~bnk0__R) // activate
    begin
          l__a13__10 <= a13__r ;
    end
  always @(posedge clk__in)
    if (actv__cmd__R & ~rs0N__R & bnk1__R & bnk0__R) // activate
    begin
          l__a13__11 <= a13__r ;
    end
// gated cas
assign cas__i = ~(casN__R);
assign cas0__o = ( ~rasN__R & cas__i)
```

-continued

```
        | ( rasN_R & ~l_a13_00 & ~bnk1_R & ~bnk0_R & cas_i)
        | ( rasN_R & ~l_a13_01 & ~bnk1_R & bnk0_R & cas_i)
        | ( rasN_R & ~l_a13_10 & bnk1_R & ~bnk0_R & cas_i)
        | ( rasN_R & ~l_a13_11 & bnk1_R & bnk0_R & cas_i)
        ;
assign cas1_o = ( ~rasN_R & cas_i)
        | ( rasN_R & l_a13_00      & ~bnk1_R & ~bnk0_R & cas_i)
        | ( rasN_R & l_a13_01      & ~bnk1_R & bnk0_R & cas_i)
        | ( rasN_R & l_a13_10      & bnk1_R & ~bnk0_R & cas_i)
        | (rasN_R & l_a13_11       & bnk1_R & bnk0_R & cas_i)
        ;
assign    pcas_0_N = ~cas0_o;
assign    pcas_1_N = ~cas1_o;
assign    rd0_o_R1 = rasN_R & cas0_o & weN_R & ~rs0N_R; // rnk0 rd cmd cyc
assign    rd1_o_R1 = rasN_R & cas1_o & weN_R & ~rs0N_R; // rnk1 rd cmd cyc
assign    wr0_o_R1 = rasN_R & cas0_o & ~weN_R & ~rs0N_R; // rnk0 wr cmd cyc
assign    wr1_o_R1 = rasN_R & cas1_o & ~weN_R & ~rs0N_R ; // rnk1 wr cmd cyc
 always @(posedge clk_in)
  begin
        rd0_o_R2 <= rd0_o_R1 ;
        rd0_o_R3 <= rd0_o_R2;
        rd0_o_R4 <= rd0_o_R3;
        rd0_o_R5 <= rd0_o_R4;
        rd1_o_R2 <= rd1_o_R1 ;
        rd1_o_R3 <= rd1_o_R2;
        rd1_o_R4 <= rd1_o_R3;
        rd1_o_R5 <= rd1_o_R4;
        wr0_o_R2 <= wr0_o_R1 ;
        wr0_o_R3 <= wr0_o_R2;
        wr0_o_R4 <= wr0_o_R3;
        wr1_o_R2 <= wr1_o_R1 ;
        wr1_o_R3 <= wr1_o_R2;
        wr1_o_R4 <= wr1_o_R3;
  end
 always @(posedge clk_in)
  begin
  if (
      (rd0_o_R2 & ~rd1_o_R4)                          // pre-am rd if no ped on rnk 1
   | rd0_o_R3                                         // 1st cyc of rd brst
   | rd0_o_R4                                         // 2nd cyc of rd brst
   | (rd0_o_R5 & ~rd1_o_R2 & ~rd1_o_R3)               // post-rd cyc if no ped on rnk 1
   | (wr0_o_R1)                                       // pre-am wr
   | wr0_o_R2 | wr0_o_R3                              // wr brst 1st & 2nd cyc
   | (wr0_o_R4)                                       // post-wr cyc (chgef9)
   | wr1_o_R1 | wr1_o_R2 | wr1_o_R3 | wr1_o_R4 // rank 1 (chgef9)
   )
            en_fet_a <= 1 'b1;                        // enable fet
  else
            en_fet_a <= 1 'b0;                        // disable fet
  end
 always @(posedge clk_in)
        begin
        if (
         (rd1_o_R2 & ~rd0_o_R4)
        | rd1_o_R3
        | rd1_o_R4
        | (rd1_o_R5 & ~rd0_o_R2 & ~rd0_o_R3)
      | (wr1_o_R1)                                    // (chgef8)
      | wr1_o_R2 | wr1_o_R3
     | (wr1_o_R4)                                     // post-wr cyc (chgef9)
     | wr0_o_R1 | wr0_o_R2 | wr0_o_R3 | wr0_o_R4      // rank 0 (chgef9)
        )
            en_fet_b <= 1 'b1;                        //
        else
            en_fet_b <= 1 'b0;
        end
```

FIG. **2**A schematically illustrates an exemplary memory module **10** which doubles the rank density in accordance with certain embodiments described herein. The memory module **10** has a first memory capacity. The memory module **10** comprises a plurality of substantially identical memory devices **30** configured as a first rank **32** and a second rank **34**. In certain embodiments, the memory devices **30** of the first rank **32** are configured in pairs, and the memory devices **30** of the second rank **34** are also configured in pairs. In certain embodiments, the memory devices **30** of the first rank **32** are configured with their respective DQS pins tied together and the memory devices **30** of the second rank **34** are configured with their respective DQS pins tied together, as described more fully below. The memory module **10** further comprises a logic element **40** which receives a first set of address and control signals from a memory controller (not shown) of the computer system. The first set of address and control signals is compatible with a second memory capacity substantially

equal to one-half of the first memory capacity. The logic element **40** translates the first set of address and control signals into a second set of address and control signals which is compatible with the first memory capacity of the memory module **10** and which is transmitted to the first rank **32** and the second rank **34**.

The first rank **32** of FIG. **2**A has 18 memory devices **30** and the second rank **34** of FIG. **2**A has 18 memory devices **30**. Other numbers of memory devices **30** in each of the ranks **32**, **34** are also compatible with embodiments described herein.

In the embodiment schematically illustrated by FIG. **2**A, the memory module **10** has a width of 8 bytes (or 64 bits) and each of the memory devices **30** of FIG. **2**A has a bit width of 4 bits. The 4-bit-wide ("×4") memory devices **30** of FIG. **2**A have one-half the width, but twice the depth of 8-bit-wide ("×8") memory devices. Thus, each pair of "×4" memory devices **30** has the same density as a single "×8" memory device, and pairs of "×4" memory devices **30** can be used instead of individual "×8" memory devices to provide the memory density of the memory module **10**. For example, a pair of 512-Mb 128M×4-bit memory devices has the same memory density as a 1-Gb 128M×8-bit memory device.

For two "×4" memory devices **30** to work in tandem to mimic a "×8" memory device, the relative DQS pins of the two memory devices **30** in certain embodiments are advantageously tied together, as described more fully below. In addition, to access the memory density of a high-density memory module **10** comprising pairs of "×4" memory devices **30**, an additional address line is used. While a high-density memory module comprising individual "×8" memory devices with the next-higher density would also utilize an additional address line, the additional address lines are different in the two memory module configurations.

For example, a 1-Gb 128M×8-bit DDR-1 DRAM memory device uses row addresses A_{13}-A_0 and column addresses A_{11} and A_0-A_0. A pair of 512-Mb 128M×4-bit DDR-1 DRAM memory devices uses row addresses A_{12}-A_0 and column addresses A_{12}, A_{11}, and A_9-A_0. In certain embodiments, a memory controller of a computer system utilizing a 1-GB 128M×8 memory module **10** comprising pairs of the 512-Mb 128M×4 memory devices **30** supplies the address and control signals including the extra row address (A_{13}) to the memory module **10**. The logic element **40** receives the address and control signals from the memory controller and converts the extra row address (A_{13}) into an extra column address (A_{12}).

FIG. **2**B schematically illustrates an exemplary logic element **40** compatible with embodiments described herein. The logic element **40** is used for a memory module **10** comprising pairs of "×4" memory devices **30** which mimic individual "×8" memory devices. In certain embodiments, each pair has the respective DQS pins of the memory devices **30** tied together. In certain embodiments, as schematically illustrated by FIG. **2**B, the logic element **40** comprises a programmable-logic device (PLD) **42**, a first multiplexer **44** electrically coupled to the first rank **32** of memory devices **30**, and a second multiplexer **46** electrically coupled to the second rank **34** of memory devices **30**. In certain embodiments, the PLD **42** and the first and second multiplexers **44**, **46** are discrete elements, while in, other certain embodiments, they are integrated within a single integrated circuit. Persons skilled in the art can select an appropriate PLD **42**, first multiplexer **44**, and second multiplexer **46** in accordance with embodiments described herein.

In the exemplary logic element **40** of FIG. **2**B, during a row access procedure (CAS is high), the first multiplexer **44** passes the A_{12} address through to the first rank **32**, the second multiplexer **46** passes the A_{12} address through to the second rank **34**, and the PLD **42** saves or latches the A_{13} address from the memory controller. In certain embodiments, a copy of the A_{13} address is saved by the PLD **42** for each of the internal banks (e.g., 4 internal banks) per memory device **30**. During a subsequent column access procedure (CAS is low), the first multiplexer **44** passes the previously-saved A_{13} address through to the first rank **32** as the A_{12} address and the second multiplexer **46** passes the previously-saved A_{13} address through to the second rank **34** as the A_{12} address. The first rank **32** and the second rank **34** thus interpret the previously-saved A_{13} row address as the current A_{12} column address. In this way, in certain embodiments, the logic element **40** translates the extra row address into an extra column address in accordance with certain embodiments described herein.

Thus, by allowing two lower-density memory devices to be used rather than one higher-density memory device, certain embodiments described herein provide the advantage of using lower-cost, lower-density memory devices to build "next-generation" higher-density memory modules. Certain embodiments advantageously allow the use of lower-cost readily-available 512-Mb DDR-2 SDRAM devices to replace more expensive 1-Gb DDR-2 SDRAM devices. Certain embodiments advantageously reduce the total cost of the resultant memory module.

FIG. **3**A schematically illustrates an exemplary memory module **10** which doubles number of ranks in accordance with certain embodiments described herein. The memory module **10** has a first plurality of memory locations with a first memory density. The memory module **10** comprises a plurality of substantially identical memory devices **30** configured as a first rank **32**, a second rank **34**, a third rank **36**, and a fourth rank **38**. The memory module **10** further comprises a logic element **40** which receives a first set of address and control signals from a memory controller (not shown). The first set of address and control signals is compatible with a second plurality of memory locations having a second memory density. The second memory density is substantially equal to one-half of the first memory density. The logic element **40** translates the first set of address and control signals into a second set of address and control signals which is compatible with the first plurality of memory locations of the memory module **10** and which is transmitted to the first rank **32**, the second rank **34**, the third rank **36**, and the fourth rank **38**.

Each rank **32**, **34**, **36**, **38** of FIG. **3**A has 9 memory devices **30**. Other numbers of memory devices **30** in each of the ranks **32**, **34**, **36**, **38** are also compatible with embodiments described herein.

In the embodiment schematically illustrated by FIG. **3**A, the memory module **10** has a width of 8 bytes (or 64 bits) and each of the memory devices **30** of FIG. **3**A has a bit width of 8 bits. Because the memory module **10** has twice the number of 8-bit-wide ("×8") memory devices **30** as does a standard 8-byte-wide memory module, the memory module **10** has twice the density as does a standard 8-byte-wide memory module. For example, a 1-GB 128M×8-byte memory module with 36 512-Mb 128M×8-bit memory devices (arranged in four ranks) has twice the memory density as a 512-Mb 128M×8-byte memory module with 18 512-Mb 128M×8-bit memory devices (arranged in two ranks).

To access the additional memory density of the high-density memory module **10**, the two chip-select signals (CS_0, CS_1) are used with other address and control signals to gate a set of four gated CAS signals. For example, to access the additional ranks of four-rank 1-GB 128M×8-byte DDR-1 DRAM memory module, the CS_0 and CS_1 signals along with the other address and control signals are used to gate the CAS signal appropriately, as schematically illustrated by FIG. **3**A. FIG. **3**B schematically illustrates an exemplary logic element **40** compatible with embodiments described herein. In certain embodiments, the logic element **40** comprises a programmable-logic device (PLD) **42** and four "OR" logic elements **52**, **54**, **56**, **58** electrically coupled to corresponding ranks **32**, **34**, **36**, **38** of memory devices **30**.

In certain embodiments, the PLD **42** comprises an ASIC, an FPGA, a custom-designed semiconductor device, or a CPLD. In certain embodiments, the PLD **42** and the four "OR" logic elements **52**, **54**, **56**, **58** are discrete elements, while in other certain embodiments, they are integrated within a single integrated circuit. Persons skilled in the art can select an appropriate PLD **42** and appropriate "OR" logic elements **52**, **54**, **56**, **58** in accordance with embodiments described herein.

In the embodiment schematically illustrated by FIG. **3**B, the PLD **42** transmits each of the four "enabled CAS" ($ENCAS_0a$, $ENCAS_0b$, $ENCAS_1a$, $ENCAS_1b$) signals to a corresponding one of the "OR" logic elements **52**, **54**, **56**, **58**. The CAS signal is also transmitted to each of the four "OR" logic elements **52**, **54**, **56**, **58**. The CAS signal and the "enabled CAS" signals are "low" true signals. By selectively activating each of the four "enabled CAS" signals which are inputted into the four "OR" logic elements **52**, **54**, **56**, **58**, the PLD **42** is able to select which of the four ranks **32**, **34**, **36**, **38** is active.

In certain embodiments, the PLD **42** uses sequential and combinatorial logic procedures to produce the gated CAS signals which are each transmitted to a corresponding one of the four ranks **32**, **34**, **36**, **38**. In certain other embodiments, the PLD **42** instead uses sequential and combinatorial logic procedures to produce four gated chip-select signals (e.g., CS_0a, CS_0b, CS_1a, and CS_1b) which are each transmitted to a corresponding one of the four ranks **32**, **34**, **36**, **38**.

Back-to-Back Adjacent Read Commands

Due to their source synchronous nature, DDR SDRAM (e.g., DDR1, DDR2, DDR3) memory devices operate with a data transfer protocol which surrounds each burst of data strobes with a pre-amble time interval and a post-amble time interval. The pre-amble time interval provides a timing window for the receiving memory device to enable its data capture circuitry when a known valid level is present on the strobe signal to avoid false triggers of the memory device's capture circuit. The post-amble time interval provides extra time after the last strobe for this data capture to facilitate good signal integrity. In certain embodiments, when the computer system accesses two consecutive bursts of data from the same memory device, termed herein as a "back-to-back adjacent read," the post-amble time interval of the first read command and the pre-amble time interval of the second read command are skipped by design protocol to increase read efficiency. FIG. **4**A shows an exemplary timing diagram of this "gapless" read burst for a back-to-back adjacent read condition from one memory device.

In certain embodiments, when the second read command accesses data from a different memory device than does the first read command, there is at least one time interval (e.g., clock cycle) inserted between the data strobes of the two memory devices. This inserted time interval allows both read data bursts to occur without the post-amble time interval of the first read data burst colliding or otherwise interfering with the pre-amble time interval of the second read data burst. In certain embodiments, the memory controller of the computer system inserts an extra clock cycle between successive read commands issued to different memory devices, as shown in the exemplary timing diagram of FIG. **4**B for successive read accesses from different memory devices.

In typical computer systems, the memory controller is informed of the memory boundaries between the ranks of memory of the memory module prior to issuing read commands to the memory module. Such memory controllers can insert wait time intervals or clock cycles to avoid collisions or interference between back-to-back adjacent read commands which cross memory device boundaries, which are referred to herein as "BBARX."

In certain embodiments described herein in which the number of ranks of the memory module is doubled or quadrupled, the logic element **40** generates a set of output control signals so that the selection decoding is transparent to the computer system. However, in certain such embodiments, there are memory device boundaries of which the computer system is unaware, so there are occasions in which BBARX occurs without the cognizance of the memory controller of the computer system. As shown in FIG. **5**, the last data strobe of memory device "a" collides with the pre-amble time interval of the data strobe of memory device "b," resulting in a "collision window."

FIG. **6**A schematically illustrates a circuit diagram of a conventional memory module **100** showing the interconnections between the DQ data signal lines **102** of the memory devices "a" and "b" (not shown) and their DQS data strobe signal lines **104**. In certain embodiments, the electrical signal lines are etched on the printed circuit board. As shown in FIG. **6**A, each of the memory devices has their DQ data signal lines **102** electrically coupled to a common DQ line **112** and the DQS data strobe signal lines **104** electrically coupled to a common DQS line **114**.

In certain embodiments, BBARX collisions are avoided by a mechanism which electrically isolates the DQS data strobe signal lines **104** of the memory devices from one another during the transition from the first read data burst of one rank of memory devices to the second read data burst of another rank of memory devices. FIG. **6**B schematically illustrates a circuit diagram of an exemplary memory module **10** comprising an isolation device **120** in accordance with certain embodiments described herein. As shown in FIG. **6**B, each of the memory devices **30** otherwise involved in a BBARX collision have their DQS data strobe signal lines **104** electrically coupled to the common DQS line **114** through the isolation element **120**. The isolation device **120** of certain embodiments multiplexes the DQS data strobe signal lines **104** of the two ranks of memory devices **30** from one another to avoid a BBARX collision.

In certain embodiments, as schematically illustrated by FIG. **6**B, the isolation device **120** comprises a first switch **122** electrically coupled to a first data strobe signal line (e.g., DQSa) of a first memory device (not shown) and a second switch **124** electrically coupled to a second data strobe signal line (e.g., DQSb) of a second memory device (not shown). Exemplary switches compatible with embodiments described herein include, but are not limited to field-effect transistor (FET) switches, such as the SN74AUC1G66 single bilateral analog switch available from Texas Instruments, Inc. of Dallas, Tex. In certain embodiments, the time

for switching the first switch **122** and the second switch **124** is between the two read data bursts (e.g., after the last DQS data strobe of the read data burst of the first memory device and before the first DQS data strobe of the read data burst of the second memory device). During the read data burst for a first memory device, the first switch **122** is enabled. After the last DQS data strobe of the first memory device and before the first DQS data strobe of the second memory device, the first switch **122** is disabled and the second switch **124** is enabled.

In certain embodiments, as schematically illustrated by FIG. **6**C, the isolation device **120** comprises a logic element **140** which multiplexes the DQS data strobe signal lines **104** from one another. Exemplary logic elements compatible with embodiments described herein include, but are not limited to multiplexers, such as the SN74AUC2G53 2:1 analog multiplexer/demultiplexer available from Texas Instruments, Inc. of Dallas, Tex. The logic element **140** receives a first DQS data strobe signal from the first memory device and a second DQS data strobe signal from a second memory device and selectively switches one of the first and second DQS data strobe signals to the common DQS data strobe signal line **114**. Persons skilled in the art can select other types of isolation devices **120** compatible with embodiments described herein.

In certain embodiments, as schematically illustrated by FIG. **6**D, the isolation device **120** also multiplexes the DQ data signal lines **102** of the two memory devices from one another. For example, in certain embodiments, the isolation device **120** comprises a pair of switches on the DQ data signal lines **102**, similar to the switches **122**, **124** on the DQS data strobe signal lines **104** schematically illustrated by FIG. **6**B. In certain other embodiments, the isolation device **120** comprises a logic element **150**, as schematically illustrated by FIG. **6**D. In certain embodiments, the same types of switches and/or logic elements are used for the DQ data signal lines **102** as for the DQS data strobe signal lines **104**. The logic element **150** receives a first DQ data signal from the first memory device and a second DQ data signal from the second memory device and selectively switches one of the first and second DQ data signals to the common DQ data signal line **112**. Persons skilled in the art can select other types of isolation devices **120** compatible with embodiments described herein.

In certain embodiments, the isolation device **120** advantageously adds propagation delays to the DQ data signals which match the DQS strobe signals being multiplexed by the isolation device **120**. In certain embodiments, the isolation device **120** advantageously presents a reduced impedance load to the computer system by selectively switching between the two ranks of memory devices to which it is coupled. This feature of the isolation device **120** is used in certain embodiments in which there is no memory density multiplication of the memory module (e.g., for a computer system with four chip-select signals), but where the impedance load of the memory module may otherwise limit the number of ranks or the number of memory devices per memory module. As schematically illustrated by FIG. **6**E, the isolation device **120** of certain such embodiments comprises the logic element **150** on the DQ data signal lines but not a corresponding logic element on the DQS data strobe signal lines.

In certain embodiments, the control and timing of the isolation device **120** is performed by an isolation-control logic element (e.g., application-specific integrated circuit, custom programmable logic device, field-programmable gate array, etc.) which is resident on the memory module **10**. In certain embodiments, the isolation-control logic element is the same logic element **40** as schematically illustrated in FIGS. **1**A and **1**B, is part of the isolation device **120** (e.g., logic element **140** or logic element **150** as schematically illustrated by FIG. **6**D), or is a separate component. The isolation-control logic element of certain embodiments controls the isolation device **120** by monitoring commands received by the memory module **10** from the computer system and producing "windows" of operation whereby the appropriate components of the isolation device **120** are switched to enable and disable the DQS data strobe signal lines **104** to mitigate BBARX collisions. In certain other embodiments, the isolation-control logic element monitors the commands received by the memory module from the computer system and selectively enables and disables the DQ data signal lines **102** to reduce the load impedance of the memory module **10** on the computer system. In still other embodiments, this logic element performs both of these functions together.

Tied Data Strobe Signal Pins

For proper operation, the computer system advantageously recognizes a 1-GB memory module comprising 256-Mb memory devices with 64M×4-bit configuration as a 1-GB memory module having 512-Mb memory devices with 64M×8-bit configuration (e.g., as a 1-GB memory module with 128M×8-byte configuration). This advantageous result is desirably achieved in certain embodiments by electrically connecting together two output signal pins (e.g., DQS or data strobe pins) of the two 256-Mb memory devices such that both output signal pins are concurrently active when the two memory devices are concurrently enabled. The DQS or data strobe is a bi-directional signal that is used during both read cycles and write cycles to validate or latch data. As used herein, the terms "tying together" or "tied together" refer to a configuration in which corresponding pins (e.g., DQS pins) of two memory devices are electrically connected together and are concurrently active when the two memory devices are concurrently enabled (e.g., by a common chip-select or CS signal). Such a configuration is different from standard memory module configurations in which the output signal pins (e.g., DQS pins) of two memory devices are electrically coupled to the same source, but these pins are not concurrently active since the memory devices are not concurrently enabled. However, a general guideline of memory module design warns against tying together two output signal pins in this way.

FIGS. **7** and **8** schematically illustrate a problem which may arise from tying together two output signal pins. FIG. **7** schematically illustrates an exemplary memory module **205** in which a first DQS pin **212** of a first memory device **210** is electrically connected to a second DQS pin **222** of a second memory device **220**. The two DQS pins **212**, **222** are both electrically connected to a memory controller **230**.

FIG. **8** is an exemplary timing diagram of the voltages applied to the two DQS pins **212**, **222** due to non-simultaneous switching. As illustrated by FIG. **8**, at time t_1, both the first DQS pin **212** and the second DQS pin **222** are high, so no current flows between them. Similarly, at time t_4, both the first DQS pin **212** and the second DQS pin **222** are low, so no current flows between them. However, for times between approximately t_2 and approximately t_3, the first DQS pin **212** is low while the second DQS pin **222** is high. Under such conditions, a current will flow between the two DQS pins **212**, **222**. This condition in which one DQS pin is low while the other DQS pin is high can occur for fractions of a second (e.g., 0.8 nanoseconds) during the dynamic random-access

memory (DRAM) read cycle. During such conditions, the current flowing between the two DQS pins **212**, **222** can be substantial, resulting in heating of the memory devices **210**, **220**, and contributing to the degradation of reliability and eventual failure of these memory devices.

A second problem may also arise from tying together two output signal pins. FIG. **9** schematically illustrates another exemplary memory module **205** in which a first DQS pin **212** of a first memory device **210** is electrically connected to a second DQS pin **214** of a second memory device **220**. The two DQS pins **212**, **214** of FIG. **9** are both electrically connected to a memory controller (not shown). The DQ (data input/output) pin **222** of the first memory device **210** and the corresponding DQ pin **224** of the second memory device **220** are each electrically connected to the memory controller by the DQ bus (not shown). Typically, each memory device **210**, **220** will have a plurality of DQ pins (e.g., eight DQ pins per memory device), but for simplicity, FIG. **9** only shows one DQ pin for each memory device **210**, **220**.

Each of the memory devices **210**, **220** of FIG. **9** utilizes a respective on-die termination or "ODT" circuit **232**, **234** which has termination resistors (e.g., 75 ohms) internal to the memory devices **210**, **220** to provide signal termination. Each memory device **210**, **220** has a corresponding ODT signal pin **262**, **264** which is electrically connected to the memory controller via an ODT bus **240**. The ODT signal pin **262** of the first memory device **210** receives a signal from the ODT bus **240** and provides the signal to the ODT circuit **232** of the first memory device **210**. The ODT circuit **232** responds to the signal by selectively enabling or disabling the internal termination resistors **252**, **256** of the first memory device **210**. This behavior is shown schematically in FIG. **9** by the switches **242**, **244** which are either closed (dash-dot line) or opened (solid line). The ODT signal pin **264** of the second memory device **220** receives a signal from the ODT bus **240** and provides the signal to the ODT circuit **234** of the second memory device **220**. The ODT circuit **234** responds to the signal by selectively enabling or disabling the internal termination resistors **254**, **258** of the second memory device **220**. This behavior is shown schematically in FIG. **9** by the switches **246**, **248** which are either closed (dash-dot line) or opened (solid line). The switches **242**, **244**, **246**, **248** of FIG. **9** are schematic representations of the operation of the ODT circuits **232**, **234**, and do not signify that the ODT circuits **232**, **234** necessarily include mechanical switches.

Examples of memory devices **210**, **220** which include such ODT circuits **232**, **234** include, but are not limited to, DDR2 memory devices. Such memory devices are configured to selectively enable or disable the termination of the memory device in this way in response to signals applied to the ODT signal pin of the memory device. For example, when the ODT signal pin **262** of the first memory device **210** is pulled high, the termination resistors **252**, **256** of the first memory device **210** are enabled. When the ODT signal pin **262** of the first memory device **210** is pulled low (e.g., grounded), the termination resistors **252**, **256** of the first memory device **210** are disabled. By selectively disabling the termination resistors of an active memory device, while leaving the termination resistors of inactive memory devices enabled, such configurations advantageously preserve signal strength on the active memory device while continuing to eliminate signal reflections at the bus-die interface of the inactive memory devices.

In certain configurations, as schematically illustrated by FIG. **9**, the DQS pins **212**, **214** of each memory device **210**, **220** are selectively connected to a voltage VTT through a corresponding termination resistor **252**, **254** internal to the corresponding memory device **210**, **220**. Similarly, in certain configurations, as schematically illustrated by FIG. **9**, the DQ pins **222**, **224** are selectively connected to a voltage VTT through a corresponding termination resistor **256**, **258** internal to the corresponding memory device **210**, **220**. In certain configurations, rather than being connected to a voltage VTT, the DQ pins **212**, **214** and/or the DQS pins **222**, **224** are selectively connected to ground through the corresponding termination resistors **252**, **254**, **256**, **258**. The resistances of the internal termination resistors **252**, **254**, **256**, **258** are selected to clamp the voltages so as to reduce the signal reflections from the corresponding pins. In the configuration schematically illustrated by FIG. **9**, each internal termination resistor **252**, **254**, **256**, **258** has a resistance of approximately 75 ohms.

When connecting the first memory device **210** and the second memory device **220** together to form a double word width, both the first memory device **210** and the second memory device **220** are enabled at the same time (e.g., by a common CS signal). Connecting the first memory device **210** and the second memory device **220** by tying the DQS pins **212**, **214** together, as shown in FIG. **9**, results in a reduced effective termination resistance for the DQS pins **212**, **214**. For example, for the exemplary configuration of FIG. **9**, the effective termination resistance for the DQS pins **212**, **214** is approximately 37.5 ohms, which is one-half the desired ODT resistance (for 75-ohm internal termination resistors) to reduce signal reflections since the internal termination resistors **252**, **254** of the two memory devices **210**, **220** are connected in parallel. This reduction in the termination resistance can result in signal reflections causing the memory device to malfunction.

FIG. **10** schematically illustrates an exemplary memory module **300** in accordance with certain embodiments described herein. The memory module **300** comprises a first memory device **310** having a first data strobe (DQS) pin **312** and a second memory device **320** having a second data strobe (DQS) pin **322**. The memory module **300** further comprises a first resistor **330** electrically coupled to the first DQS pin **312**. The memory module **300** further comprises a second resistor **340** electrically coupled to the second DQS pin **322** and to the first resistor **330**. The first DQS pin **312** is electrically coupled to the second DQS pin **322** through the first resistor **330** and through the second resistor **340**.

In certain embodiments, the memory module **300** is a 1-GB unbuffered Double Data Rate (DDR) Synchronous Dynamic RAM (SDRAM) high-density dual in-line memory module (DIMM). FIGS. **11**A and **11**B schematically illustrate a first side **362** and a second side **364**, respectively, of such a memory module **300** with eighteen 64M×4-bit, DDR-1 SDRAM FBGA memory devices on each side of a 184-pin glass-epoxy printed circuit board (PCB) **360**. In certain embodiments, the memory module **300** further comprises a phase-lock-loop (PLL) clock driver **370**, an EEPROM for serial-presence detect (SPD) data **380**, and decoupling capacitors (not shown) mounted on the PCB in parallel to suppress switching noise on VDD and VDDQ power supply for DDR-1 SDRAM. By using synchronous design, such memory modules **300** allow precise control of data transfer between the memory module **300** and the system controller. Data transfer can take place on both edges of the DQS signal at various operating frequencies and programming latencies. Therefore, certain such memory modules **300** are suitable for a variety of high-performance system applications.

In certain embodiments, the memory module **300** comprises a plurality of memory devices configured in pairs, each pair having a first memory device **310** and a second memory device **320**. For example, in certain embodiments, a 128M×72-bit DDR SDRAM high-density memory module **300** comprises thirty-six 64M×4-bit DDR-1 SDRAM integrated circuits in FBGA packages configured in eighteen pairs. The first memory device **310** of each pair has the first DQS pin **312** electrically coupled to the second DQS pin **322** of the second memory device **320** of the pair. In addition, the first DQS pin **312** and the second DQS pin **322** are concurrently active when the first memory device **310** and the second memory device **320** are concurrently enabled.

In certain embodiments, the first resistor **330** and the second resistor **340** each has a resistance advantageously selected to reduce the current flow between the first DQS pin **312** and the second DQS pin **322** while allowing signals to propagate between the memory controller and the DQS pins **312**, **322**. In certain embodiments, each of the first resistor **330** and the second resistor **340** has a resistance in a range between approximately 5 ohms and approximately 50 ohms. For example, in certain embodiments, each of the first resistor **330** and the second resistor **340** has a resistance of approximately 22 ohms. Other resistance values for the first resistor **330** and the second resistor **340** are also compatible with embodiments described herein. In certain embodiments, the first resistor **330** comprises a single resistor, while in other embodiments, the first resistor **330** comprises a plurality of resistors electrically coupled together in series and/or in parallel. Similarly, in certain embodiments, the second resistor **340** comprises a single resistor, while in other embodiments, the second resistor **340** comprises a plurality of resistors electrically coupled together in series and/or in parallel.

FIGS. **12**A and **12**B schematically illustrate an exemplary embodiment of a memory module **300** in which the first resistor **330** and the second resistor **340** are used to reduce the current flow between the first DQS pin **312** and the second DQS pin **322**. As schematically illustrated by FIG. **12**A, the memory module **300** is part of a computer system **400** having a memory controller **410**. The first resistor **330** has a resistance of approximately 22 ohms and the second resistor **340** has a resistance of approximately 22 ohms. The first resistor **330** and the second resistor **340** are electrically coupled in parallel to the memory controller **410** through a signal line **420** having a resistance of approximately 25 ohms. The first resistor **330** and the second resistor **340** are also electrically coupled in parallel to a source of a fixed termination voltage (identified by VTT in FIGS. **12**A and **12**B) by a signal line **440** having a resistance of approximately 47 ohms. Such an embodiment can advantageously be used to allow two memory devices having lower bit widths (e.g., 4-bit) to behave as a single virtual memory device having a higher bit width (e.g., 8-bit).

FIG. **12**B schematically illustrates exemplary current-limiting resistors **330**, **340** in conjunction with the impedances of the memory devices **310**, **320**. During an exemplary portion of a data read operation, the memory controller **410** is in a high-impedance condition, the first memory device **310** drives the first DQS pin **312** high (e.g., 2.7 volts), and the second memory device **320** drives the second DQS pin **322** low (e.g., 0 volts). The amount of time for which this condition occurs is approximated by the time between t_2 and t_3 of FIG. **8**, which in certain embodiments is approximately twice the tDQSQ (data strobe edge to output data edge skew time, e.g., approximately 0.8 nanoseconds). At least a portion of this time in certain embodiments is caused by simultaneous switching output (SSO) effects.

In certain embodiments, as schematically illustrated by FIG. **12**B, the DQS driver of the first memory device **310** has a driver impedance R_1 of approximately 17 ohms, and the DQS driver of the second memory device **320** has a driver impedance R_4 of approximately 17 ohms. Because the upper network of the first memory device **310** and the first resistor **330** (with a resistance R_2 of approximately 22 ohms) is approximately equal to the lower network of the second memory device **320** and the second resistor **340** (with a resistance R_3 of approximately 22 ohms), the voltage at the midpoint is approximately 0.5*(2.7−0)=1.35 volts, which equals VTT, such that the current flow across the 47-ohm resistor of FIG. **12**B is approximately zero.

The voltage at the second DQS pin **322** in FIG. **12**B is given by $V_{DQS2}=2.7*R_4/(R_1+R_2+R_3+R_4)=0.59$ volts and the current flowing through the second DQS pin **322** is given by $I_{DQS2}=0.59/R_4=34$ milliamps. The power dissipation in the DQS driver of the second memory device **320** is thus $P_{DQS2}=34$ mA*0.59 V=20 milliwatts. In contrast, without the first resistor **330** and the second resistor **340**, only the 17-ohm impedances of the two memory devices **310**, **320** would limit the current flow between the two DQS pins **312**, **322**, and the power dissipation in the DQS driver of the second memory device **320** would be approximately 107 milliwatts. Therefore, the first resistor **330** and the second resistor **340** of FIGS. **12**A and **12**B advantageously limit the current flowing between the two memory devices during the time that the DQS pin of one memory device is driven high and the DQS pin of the other memory device is driven low.

In certain embodiments in which there is overshoot or undershoot of the voltages, the amount of current flow can be higher than those expected for nominal voltage values. Therefore, in certain embodiments, the resistances of the first resistor **330** and the second resistor **340** are advantageously selected to account for such overshoot/undershoot of voltages.

For certain such embodiments in which the voltage at the second DQS pin **322** is $V_{DQS2}=0.59$ volts and the duration of the overdrive condition is approximately 0.8 nanoseconds at maximum, the total surge is approximately 0.59 V*1.2 ns=0.3 V-ns. For comparison, the JEDEC standard for overshoot/undershoot is 2.4 V-ns, so certain embodiments described herein advantageously keep the total surge within predetermined standards (e.g., JEDEC standards).

FIG. **13** schematically illustrates another exemplary memory module **500** compatible with certain embodiments described herein. The memory module **500** comprises a termination bus **505**. The memory module **500** further comprises a first memory device **510** having a first data strobe pin **512**, a first termination signal pin **514** electrically coupled to the termination bus **505**, a first termination circuit **516**, and at least one data pin **518**. The first termination circuit **516** selectively electrically terminating the first data strobe pin **512** and the first data pin **518** in response to a first signal received by the first termination signal pin **514** from the termination bus **505**. The memory module **500** further comprises a second memory device **520** having a second data strobe pin **522** electrically coupled to the first data strobe pin **512**, a second termination signal pin **524**, a second termination circuit **526**, and at least one data pin **528**. The second termination signal pin **524** is electrically coupled to a voltage, wherein the second termination circuit **526** is responsive to the voltage by not terminating the second data strobe pin **522** or the second data pin **528**. The memory module **500** further comprises at least one termination

assembly **530** having a third termination signal pin **534**, a third termination circuit **536**, and at least one termination pin **538** electrically coupled to the data pin **528** of the second memory device **520**. The third termination signal pin **534** is electrically coupled to the termination bus **505**. The third termination circuit **536** selectively electrically terminates the data pin **528** of the second memory device **520** through the termination pin **538** in response to a second signal received by the third termination signal pin **534** from the termination bus **505**.

FIG. **14** schematically illustrates a particular embodiment of the memory module **500** schematically illustrated by FIG. **13**. The memory module **500** comprises an on-die termination (ODT) bus **505**. The memory module **500** comprises a first memory device **510** having a first data strobe (DQS) pin **512**, a first ODT signal pin **514** electrically coupled to the ODT bus **505**, a first ODT circuit **516**, and at least one data (DQ) pin **518**. The first ODT circuit **516** selectively electrically terminates the first DQS pin **512** and the DQ pin **518** of the first memory device **510** in response to an ODT signal received by the first ODT signal pin **514** from the ODT bus **505**. This behavior of the first ODT circuit **516** is schematically illustrated in FIG. **14** by the switches **572**, **576** which are selectively closed (dash-dot line) or opened (solid line).

The memory module **500** further comprises a second memory device **520** having a second DQS pin **522** electrically coupled to the first DQS pin **512**, a second ODT signal pin **524**, a second ODT circuit **526**, and at least one DQ pin **528**. The first DQS pin **512** and the second DQS pin **522** are concurrently active when the first memory device **510** and the second memory device **520** are concurrently enabled. The second ODT signal pin **524** is electrically coupled to a voltage (e.g., ground), wherein the second ODT circuit **526** is responsive to the voltage by not terminating the second DQS pin **522** or the second DQ pin **524**. This behavior of the second ODT circuit **526** is schematically illustrated in FIG. **14** by the switches **574**, **578** which are opened.

The memory module **500** further comprises at least one termination assembly **530** having a third ODT signal pin **534** electrically coupled to the ODT bus **505**, a third ODT circuit **536**, and at least one termination pin **538** electrically coupled to the DQ pin **528** of the second memory device **520**. The third ODT circuit **536** selectively electrically terminates the DQ pin **528** of the second memory device **520** through the termination pin **538** in response to an ODT signal received by the third ODT signal pin **534** from the ODT bus **505**. This behavior of the third ODT circuit **536** is schematically illustrated in FIG. **14** by the switch **580** which is either closed (dash-dot line) or opened (solid line).

In certain embodiments, the termination assembly **530** comprises discrete electrical components which are surface-mounted or embedded on the printed-circuit board of the memory module **500**. In certain other embodiments, the termination assembly **530** comprises an integrated circuit mounted on the printed-circuit board of the memory module **500**. Persons skilled in the art can provide a termination assembly **530** in accordance with embodiments described herein.

Certain embodiments of the memory module **500** schematically illustrated by FIG. **14** advantageously avoid the problem schematically illustrated by FIG. **7** of electrically connecting the internal termination resistances of the DQS pins of the two memory devices in parallel. As described above in relation to FIG. **9**, FIGS. **13** and **14** only show one DQ pin for each memory device for simplicity. Other embodiments have a plurality of DQ pins for each memory device. In certain embodiments, each of the first ODT circuit **516**, the second ODT circuit **526**, and the third ODT circuit **536** are responsive to a high voltage or signal level by enabling the corresponding termination resistors and are responsive to a low voltage or signal level (e.g., ground) by disabling the corresponding termination resistors. In other embodiments, each of the first ODT circuit **516**, the second ODT circuit **526**, and the third ODT circuit **536** are responsive to a high voltage or signal level by disabling the corresponding termination resistors and are responsive to a low voltage or signal level (e.g., ground) by enabling the corresponding termination resistors. Furthermore, the switches **572**, **574**, **576**, **578**, **580** of FIG. **14** are schematic representations of the enabling and disabling operation of the ODT circuits **516**, **526**, **536** and do not signify that the ODT circuits **516**, **526**, **536** necessarily include mechanical switches.

The first ODT signal pin **514** of the first memory device **510** receives an ODT signal from the ODT bus **505**. In response to this ODT signal, the first ODT circuit **516** selectively enables or disables the termination resistance for both the first DQS pin **512** and the DQ pin **518** of the first memory device **510**. The second ODT signal pin **524** of the second memory device **520** is tied (e.g., directly hard-wired) to the voltage (e.g., ground), thereby disabling the internal termination resistors **554**, **558** on the second DQS pin **522** and the second DQ pin **528**, respectively, of the second memory device **520** (schematically shown by open switches **574**, **578** in FIG. **14**). The second DQS pin **522** is electrically coupled to the first DQS pin **512**, so the termination resistance for both the first DQS pin **512** and the second DQS pin **522** is provided by the termination resistor **552** internal to the first memory device **510**.

The termination resistor **556** of the DQ pin **518** of the first memory device **510** is enabled or disabled by the ODT signal received by the first ODT signal pin **514** of the first memory device **510** from the ODT bus **505**. The termination resistance of the DQ pin **528** of the second memory device **520** is enabled or disabled by the ODT signal received by the third ODT signal pin **534** of the termination assembly **530** which is external to the second memory device **520**. Thus, in certain embodiments, the first ODT signal pin **514** and the third ODT signal pin **534** receive the same ODT signal from the ODT bus **505**, and the termination resistances for both the first memory device **510** and the second memory device **520** are selectively enabled or disabled in response thereto when these memory devices are concurrently enabled. In this way, certain embodiments of the memory module **500** schematically illustrated by FIG. **14** provides external or off-chip termination of the second memory device **520**.

Certain embodiments of the memory module **500** schematically illustrated by FIG. **14** advantageously allow the use of two lower-cost readily-available 512-Mb DDR-2 SDRAM devices to provide the capabilities of a more expensive 1-GB DDR-2 SDRAM device. Certain such embodiments advantageously reduce the total cost of the resultant memory module **500**.

Certain embodiments described herein advantageously increase the memory capacity or memory density per memory slot or socket on the system board of the computer system. Certain embodiments advantageously allow for higher memory capacity in systems with limited memory slots. Certain embodiments advantageously allow for flexibility in system board design by allowing the memory module **10** to be used with computer systems designed for different numbers of ranks (e.g., either with computer systems designed for two-rank memory modules or with com-

puter systems designed for four-rank memory modules). Certain embodiments advantageously provide lower costs of board designs.

In certain embodiments, the memory density of a memory module is advantageously doubled by providing twice as many memory devices as would otherwise be provided. For example, pairs of lower-density memory devices can be substituted for individual higher-density memory devices to reduce costs or to increase performance. As another example, twice the number of memory devices can be used to produce a higher-density memory configuration of the memory module. Each of these examples can be limited by the number of chip select signals which are available from the memory controller or by the size of the memory devices. Certain embodiments described herein advantageously provide a logic mechanism to overcome such limitations.

Various embodiments of the present invention have been described above. Although this invention has been described with reference to these specific embodiments, the descriptions are intended to be illustrative of the invention and are not intended to be limiting. Various modifications and applications may occur to those skilled in the art without departing from the true spirit and scope of the invention.

What is claimed is:

1. A memory module connectable to a computer system, the memory module comprising:

a printed circuit board;

a plurality of memory devices coupled to the printed circuit board, the plurality of memory devices having a first number of memory devices; and

a logic element coupled to the printed circuit board, the logic element receiving a set of input control signals from the computer system, the set of input control signals corresponding to a second number of memory devices smaller than the first number of memory devices, the logic element generating a set of output control signals in response to the set of input control signals, the set of output control signals corresponding to the first number of memory devices, wherein the plurality of memory devices are arranged in a first number of ranks, and the set of input control signals corresponds to a second number of ranks of memory modules, the second number of ranks less than the first number of ranks, wherein the logic element further responds to a first command signal from the computer system by generating a second command signal transmitted to the plurality of memory devices, the first command signal corresponding to the second number of ranks and the second command signal corresponding to the first number of ranks.

2. The memory module of claim **1**, wherein the first command signal is a refresh signal or a precharge signal.

3. The memory module of claim **1**, wherein the memory devices comprise dynamic random-access memory (DRAM) devices.

4. The memory module of claim **1**, wherein the set of input control signals comprises a first number of chip-select signals and wherein the set of output control signals comprises a second number of chip-select signals, wherein the first number of chip-select signals is less than the second number of chip-select signals, the memory module simulating a virtual memory module having the second number of memory devices.

5. The memory module of claim **1**, wherein the logic element comprises an application-specific integrated circuit.

6. The memory module of claim **1**, wherein the logic element comprises a field-programmable gate array.

7. The memory module of claim **1**, wherein the logic element comprises a custom-designed semiconductor device.

8. The memory module of claim **1**, wherein the logic element comprises a complex programmable-logic device.

9. The memory module of claim **1**, wherein the first number of ranks is four, and the second number of ranks is two.

10. The memory module of claim **1**, wherein the first number of ranks is two, and the second number of ranks is one.

11. The memory module of claim **1**, wherein the set of input control signals comprises two chip-select signals and an address signal and the set of output control signals comprises four chip-select signals.

12. The memory module of claim **1**, wherein the printed circuit board is mountable in a module slot of the computer system, the printed circuit board having a plurality of edge connections electrically coupled to corresponding contacts of the module slot.

13. The memory module of claim **1**, wherein the plurality of memory devices are arranged to provide a first memory density per rank, and the set of output control signals corresponds to a second memory density per rank, the second memory density greater than the first memory density per rank.

* * * * *

UNITED STATES PATENT AND TRADEMARK OFFICE

CERTIFICATE OF CORRECTION

PATENT NO. : 7,289,386 B2
APPLICATION NO. : 11/173175
DATED : October 30, 2007
INVENTOR(S) : Jayesh R. Bhakta et al.

It is certified that error appears in the above-identified patent and that said Letters Patent is hereby corrected as shown below:

At Column 21, line 38, in the specification, please delete "A_0-A_0" and insert -- A_9-A_0 --, therefor.

At Column 28, line 9, in the specification, please delete "212, 214" and insert -- 222, 224 --, therefor.

At Column 28, line 9, in the specification, please delete "222, 224" and insert -- 212, 214 --, therefor.

Signed and Sealed this

Thirteenth Day of May, 2008

JON W. DUDAS
Director of the United States Patent and Trademark Office

US007289386C1

(12) INTER PARTES REEXAMINATION CERTIFICATE (1330th)

United States Patent
Bhakta et al.

(10) **Number: US 7,289,386 C1**
(45) **Certificate Issued: Aug. 19, 2016**

(54) **MEMORY MODULE DECODER**

(75) Inventors: **Jayesh R. Bhakta**, Cerritos, CA (US); **Jeffrey C. Solomon**, Irvine, CA (US)

(73) Assignee: **METARAM, INC.**, San Jose, CA (US)

Reexamination Request:
No. 95/000,546, May 11, 2010
No. 95/000,577, Oct. 20, 2010

Reexamination Certificate for:

Patent No.:	**7,289,386**
Issued:	**Oct. 30, 2007**
Appl. No.:	**11/173,175**
Filed:	**Jul. 1, 2005**

Certificate of Correction issued May 13, 2008

Related U.S. Application Data

(63) Continuation-in-part of application No. 11/075,395, filed on Mar. 7, 2005, now Pat. No. 7,286,436.

(60) Provisional application No. 60/550,668, filed on Mar. 5, 2004, provisional application No. 60/575,595, filed on May 28, 2004, provisional application No. 60/588,244, filed on Jul. 15, 2004.

(51) **Int. Cl.**

G11C 8/00	(2006.01)
G11C 8/12	(2006.01)
G06F 12/02	(2006.01)
G11C 5/04	(2006.01)
G11C 5/06	(2006.01)
G11C 7/10	(2006.01)
H05K 1/18	(2006.01)

(52) **U.S. Cl.**
CPC ***G11C 8/12*** (2013.01); ***G06F 12/0207*** (2013.01); ***G06F 12/0215*** (2013.01); ***G11C 5/04*** (2013.01); ***G11C 5/066*** (2013.01); ***G11C 7/1048*** (2013.01); ***H05K 1/181*** (2013.01); *G11C 2207/105* (2013.01); *H05K 2201/10159* (2013.01); *H05K 2203/1572* (2013.01); *Y02P 70/611* (2015.11)

(58) **Field of Classification Search**
None
See application file for complete search history.

(56) **References Cited**

To view the complete listing of prior art documents cited during the proceedings for Reexamination Control Numbers 95/000,546 and 95/000,577, please refer to the USPTO's public Patent Application Information Retrieval (PAIR) system under the Display References tab.

Primary Examiner — Behzad Peikari

(57) **ABSTRACT**

A memory module connectable to a computer system includes a printed circuit board, a plurality of memory devices coupled to the printed circuit board, and a logic element coupled to the printed circuit board. The plurality of memory devices has a first number of memory devices. The logic element receives a set of input control signals from the computer system. The set of input control signals corresponds to a second number of memory devices smaller than the first number of memory devices. The logic element generates a set of output control signals in response to the set of input control signals. The set of output control signals corresponds to the first number of memory devices.

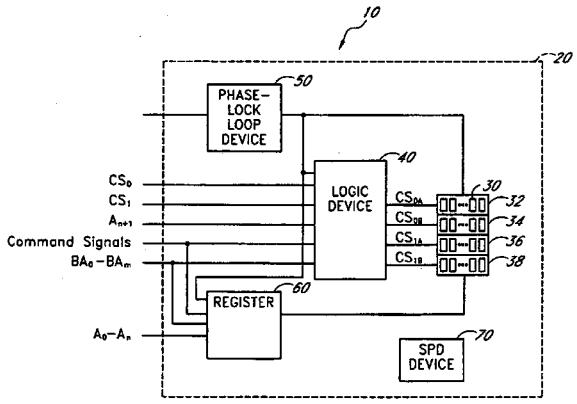

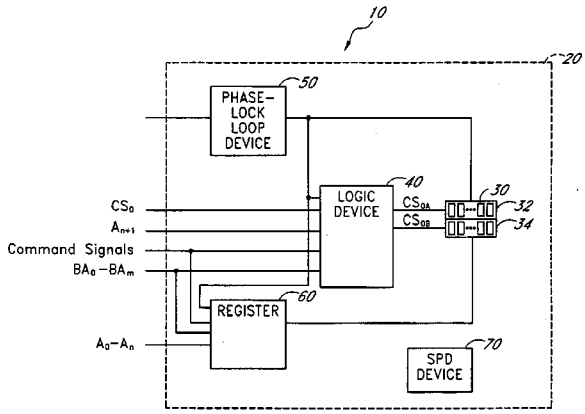

INTER PARTES REEXAMINATION CERTIFICATE

THE PATENT IS HEREBY AMENDED AS INDICATED BELOW.

AS A RESULT OF REEXAMINATION, IT HAS BEEN DETERMINED THAT:

Claims **1-13** are cancelled.

* * * * *